PONTES MACIEJ KOŻUCH

53-333 WROCŁAW
UL. POWSTAŃCÓW ŚLĄSKICH 46 / 54
POLAND

MOB. +48 793 640 228
BIURO.PONTES@GMAIL.COM

INNOVATIVE DESIGN OF COMPOSITE BRIDGES FOR MEDIUM SPANS BASED ON ROLLED SECTIONS

WP 1.1 ENGINEERING LOGIC
WP 1.2 DESIGN RULES AND BACKGROUND
WP 1.3 CASE STUDY
WP 1.4 VALIDATION REPORT
WP 1.5 SUMMARY, CONCLUSIONS AND GENERAL DESIGN RECOMMENDATIONS (FOR PRE-DESIGN)

Project PFR338-14

Authors:	Signature
dr hab. inż. **Wojciech Lorenc**	
dr inż. **Maciej Kożuch**	

Wrocław, March 2016

TABLE OF CONTENT

1 SUBJECT, PURPOSE AND SCOPE OF DOCUMENTATION 4

2 BASIS AND BACKGROUND DOCUMENTS 5

3 WP 1.1 ENGINEERING LOGIC 6

3.1 POSSIBLE CROSS-SECTIONS AT MID-SPANS 6
3.2 IDEA OF NEW SYSTEM 7
3.3 BEAMS ARRANGEMENT IN CROSS-SECTION OF THE BRIDGE 9
3.4 POSSIBLE SOLUTIONS OF SUPPORT SECTIONS 10
3.5 STATIC SYSTEM OF BRIDGE 15
3.6 GENERAL CONCLUSIONS 15
3.7 FINAL SOLUTION 16

4 WP 1.2 DESIGN RULES AND BACKGROUND 24

4.1 GENERAL GEOMETRY 24
4.2 FEA ASSUMPTIONS 26
4.3 CROSS – SECTIONS DIMENSIONING 29
4.4 SHEAR CONNECTION DIMENSIONING 37

5 WP 1.3 CASE STUDY 39

5.1 ACTIONS ON STRUCTURE 40
5.2 FE MODEL 44

5.2.1 BASIC ASSUMPTIONS FOR FE MODEL 44
5.2.2 MATERIALS USED IN THE MODEL 51
5.2.3 SECTION STAGES 53
5.2.4 CONSTRUCTION STAGES 59
5.2.5 EXTERNAL LOADS 67
5.2.6 PRECOMBINATIONS 71
5.2.7 COMBINATIONS 77
5.2.8 STRESSES IN COMPOSITE SECTIONS 79

5.3 RESULTS OF CALCULATIONS 79
5.4 CONCLUSIONS 90

6 WP 1.4 VALIDATION REPORT 91

6.1 ACTIONS ON STRUCTURE 91
6.2 FE MODEL AND PREDESIGN ANALYSIS 99
6.3 STATIC CALCULATIONS AND DIMENSIONING 103

6.3.1 STAGE 1 + 2 103
6.3.1 STAGE 3 107
6.3.2 STAGE 4 109

6.3.3 STAGE 5 114
6.3.4 RESISTANCE CHECKS 118
6.3.5 CONCRETE DECK DIMENSIONING 121

6.4 CONCLUSIONS 125

7 WP 1.5 SUMMARY, CONCLUSIONS AND GENERAL DESIGN RECOMMENDATIONS (FOR PRE-DESIGN) 127

DRAWINGS

Draw. No. 1 System for 50 m spans based on hot-rolled girders

ENCLOSURES

Annex. No. 1 Calculation report – Part 1 / 2: FE Model
Annex. No. 2 Calculation report – Part 2 / 2: Results of calculations

1 SUBJECT, PURPOSE AND SCOPE OF DOCUMENTATION

Subjects of the documentation are composite bridges with medium length spans based on rolled sections.

Purpose of the documentation is to develop a competitive composite bridge solution for bridges with spans between approx. 45 m and 55 m based on hot rolled sections.

Scope of the documentation covers 5 following work packages:

WP 1.1	Engineering logic
WP 1.2	Design rules and background
WP 1.3	Case study (design example)
WP 1.4	Validation report
WP 1.5	Summary, conclusions and general design recommendations (for pre-design)

Every work package covers the scope of issues as below:

- WP 1.1 – Engineering logic, in which basic assumptions, results of background analysis and solutions of new system are presented,
- WP 1.2 – Design rules and background, in which basic parameters, guidelines for analysis, equations and limits for design are described,
- WP 1.3 – Case study, in which design example is shown,
- WP 1.4 – Validation report, in which cross – checked calculations made independent in different software are presented,
- WP 1.5 – Summary, conclusions and general design recommendation for pre-design are discussed.

2 BASIS AND BACKGROUND DOCUMENTS

1. Purchase order no. 8.820.151731 dated 10.12.2014 r. from

   ArcelorMittal Belval & Differdange S.A.,
   66, rue de Luxembourg, L-4009 Esch-sur-Alzette,
   Grand-Duchy of Luxembourg

   for

   PONTES Maciej Kożuch,
   53-333 Wrocław, ul. Powstańców Śląskich 46/54,
   Poland

2. Standards, technical literature and other background documents:

[1] Zanon R., Hechler O., Ochojski W., Klimaszewski P., Lorenc W., Estakady drogowe WD7 i WD8 w ciągu Trasy Sucharskiego w technologii VFT. MOSTY 6/2013.
[2] EN 1990: 2002, Basis of structural design.
[3] EN 1991-1-1:2002, Actions on structures. General actions – Densities, self-weight, imposed loads for buildings.
[4] EN 1991-1-5:2004, Actions on structures. General actions – Thermal actions.
[5] EN 1991-1-6:2005, Actions on structures. General actions – Actions during execution.
[6] EN 1991-2:2003, Actions on structures. Traffic loads on bridges.
[7] EN 1992-1-1:2004, Design of concrete structures. General rules and rules for buildings.
[8] EN 1993-1-1:2005, Design of steel structures. General rules and rules for buildings.
[9] EN 1993-1-5:2006, Design of steel structures. Plated structural elements.
[10] EN 1993-1-9:2007, Design of steel structures. Fatigue.
[11] EN 1994-1-1:2008, Design of composite steel and concrete structures. General rules and rules for buildings.
[12] EN 1994-2:2005, Design of composite steel and concrete structures. General rules and rules for bridges.
[13] W.Lorenc, Steel-concrete composite sections with thick concrete plates, 8th international conference AMCM 2014.

3 WP 1.1 ENGINEERING LOGIC

Currently available on the market sections made out of fine-grain thermomechanically rolled (TM) and quenched self-tempered (QST) steel becomes in bridge engineering an alternative solutions to commonly used welded plate girders. Limit of their applicability is span length of about 40 m, what is result of an available assortment of rolled sections. An example of use of rolled sections in bridge of such spans is presented in Fig. 3.1.

Fig. 3.1 Viaducts WD7 and WD8 in Gdańsk, Poland [1]

3.1 Possible cross-sections at mid-spans

Limit in applicability of rolled sections in medium length span bridges over 40 m is bending capacity of mid-span cross-sections. These sections are constructed out of rolled girders and placed in-situ or precast concrete slab. Therefor its construction height is limited with possible assortment of hot-rolled section. The largest available sections are consider, shown in Fig. 3.2 and Fig. 3.3.

	G kg/m	h mm	b mm	t_w mm	t_f mm	r mm	A mm^2 x10^2	h_i mm	d mm	Ø	p_{min} mm	p_{max} mm	A_L m^2/m	A_G m^2/t
HL 1100 A*	343	1090	400	18,0	31,0	20	436,5	1028	988,0	M 27	116	294	3,710	10,83
HL 1100 B*	390	1100	400	20,0	36,0	20	497,0	1028	988,0	M 27	118	294	3,726	9,549
HL 1100 M*	433	1108	402	22,0	40,0	20	551,2	1028	988,0	M 27	120	296	3,746	8,657
HL 1100 R*	499	1118	405	26,0	45,0	20	635,2	1028	988,0	M 27	124	300	3,770	7,560
HL 1100 x 548*/Δ	548	1128	407	28,0	50,0	20	698,3	1028	988,0	M27	126	302	3,794	6,921
HL 1100 x 607*/Δ	607	1138	410	31,0	55,0	20	773,1	1028	988,0	M27	128	304	3,820	6,294

Fig. 3.2 Basic sections considered for application in bridges with spans over 40 m

Oznaczenie Designation Označení		Własności statyczne / Section properties / Statické vlastnosti												Classification EN 1993-1-1: 2005								
		oś y-y strong axis y-y silná osa y-y					oś z-z weak axis z-z slabá osa z-z							Pure bending y-y			Pure compression					
	G	I_y	$W_{el,y}$	$W_{pl,y}$♦	i_y	A_{vz}	I_z	$W_{el,z}$	$W_{pl,z}$♦	i_z	s_s	I_t	I_w	S235	S355	S460	S235	S355	S460	EN 10025-2: 2004	EN 10025-4: 2004	EN 10225:2009
	kg/m	mm⁴ x10⁴	mm³ x10³	mm³ x10³	mm x10	mm² x10²	mm⁴ x10⁴	mm³ x10³	mm³ x10³	mm x10	mm	mm⁴ x10⁴	mm⁶ x10⁹									
HL 1100 A	343	867400	15920	18060	44,58	206,5	33120	1656	2568	8,71	103,4	1037	92710	1	1	2	4	4	4	✓	HI	HI
HL 1100 B	390	1005000	18280	20780	44,98	230,6	38480	1924	2988	8,80	115,4	1564	108700	1	1	1	4	4	4	✓	HI	HI
HL 1100 M	433	1126000	20320	23160	45,19	254,4	43410	2160	3362	8,87	125,4	2130	123500	1	1	1	4	4	4	✓	HI	HI
HL 1100 R	499	1294000	23150	26600	45,14	300,4	49980	2468	3870	8,87	139,4	3135	143400	1	1	1	2	4	4	✓	HI	
HL 1100 x 548	548	1446000	25630	29510	45,50	325,3	56380	2771	4349	8,99	151,4	4205	163200	1	1	1	2	4	4	✓	HI	
HL 1100 x 607	607	1613000	28350	32790	45,68	361,2	63450	3095	4877	9,06	164,4	5628	185300	1	1	1	1	3	4	✓	HI	

HI = HISTAR©

Fig. 3.3 Basic parameters of considered cross-sections

With above presented assortment of rolled girders it is possible to reach construction height of composite section of about 1,45 m, which consists of approx. 1,10 m of rolled girder, 0,10 m of haunches of the slab and 0,25 m of slab thickness.

3.2 Idea of new system

New system of bridges with spans longer than 40 m has to be based on assumption that bending moment in mid-span region (sagging bending moment) cannot exceed resistance of aforementioned sections with height not greater than approx. 1,45 m. Because system will be subjected to road bridges (although it can also be adapted for railway bridges) it is assumed that stiffness of spans will not be decisive but ULS will govern in the dimensioning. If one compares bending resistance of steel section alone (HL1100B), composite steel – concrete section with slab above (assumed width of 2,00 m, thickness of 0,25 – 0,35 m), and composite steel – concrete section in negative (hogging) bending moment, where concrete is cracked and only reinforcement 2#20 cc. 100 cooperates with steel girder, then it can be proved that bending resistance of uncracked composite section is about 150 % of that of steel alone, and cracked composite section is about 120 % of aforementioned, as presented in Fig. 3.4.

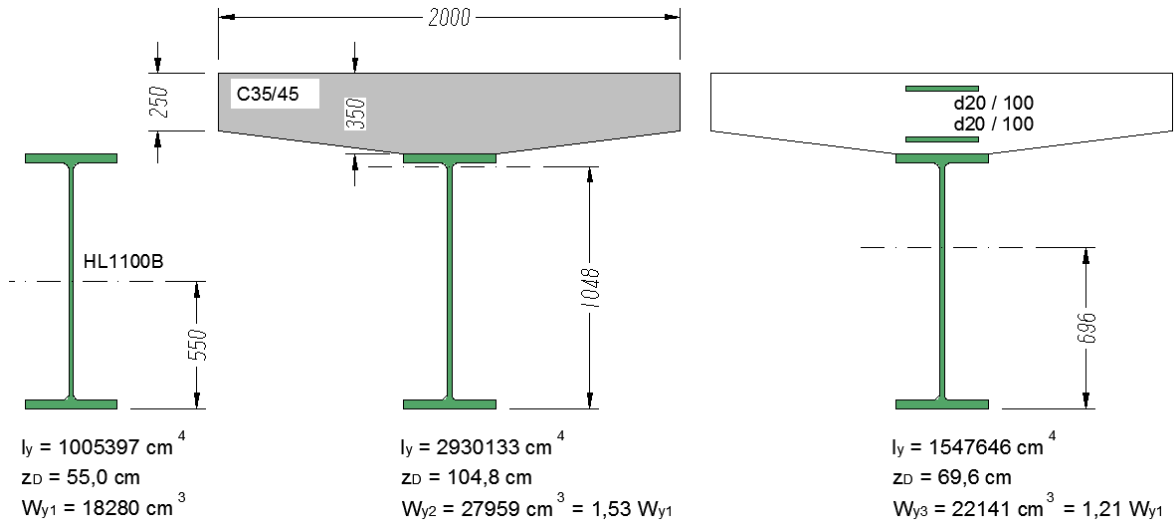

Fig. 3.4 Exemplary cross-sections – description in text

Difference between resistance of cracked and uncracked composite section is then about 20 % (various for different reinforcement ratio). Assuming that 50 % of loads are dead loads, which are carried by steel sections alone in construction stages, one can state that composite beam is designed optimally through all its length when hogging bending moment is about 10 % smaller then sagging one (approximately equal).

In both continuous beams and frames with rigid corners hogging moments are significantly bigger then sagging ones if uniformly distributed load is considered (the longer span, the greater influence of distributed loads over concentrated ones in total bending moment, so in the first approach uniform loads are considered) – see Fig. 3.5.

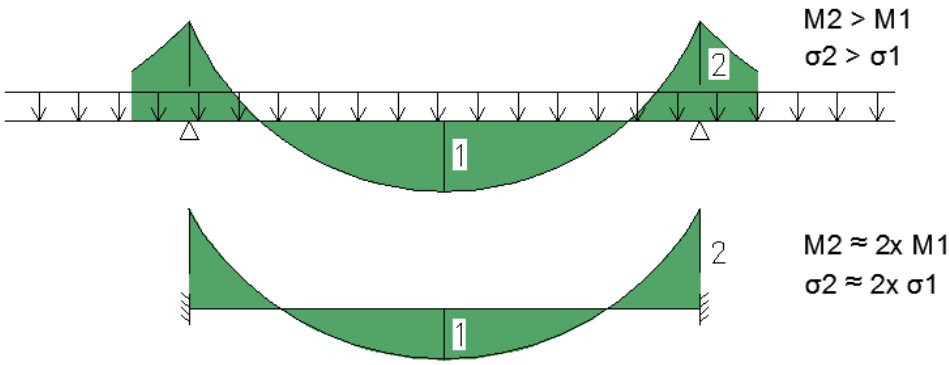

Fig. 3.5 Bending moments and stresses comparison in mid-span and support regions for continuous beams and frames with rigid corners

Thus supports of the beam should be characterized with particular stiffness, be not rigid, to obtain equal utilization of support and mid-span sections. It can be achieved by shifting supports so as to increase span length over 40 m and shaping support segments with much higher stiffness, what is a key aspect if rolled girders are used. Sufficient support stiffness will be achieved by variable construction height of beam's segments close to support. Idea of this

analysis is presented in Fig. 3.6. Length of segments with variable height and increased height itself will be parameters for individual investigations in a particular project.

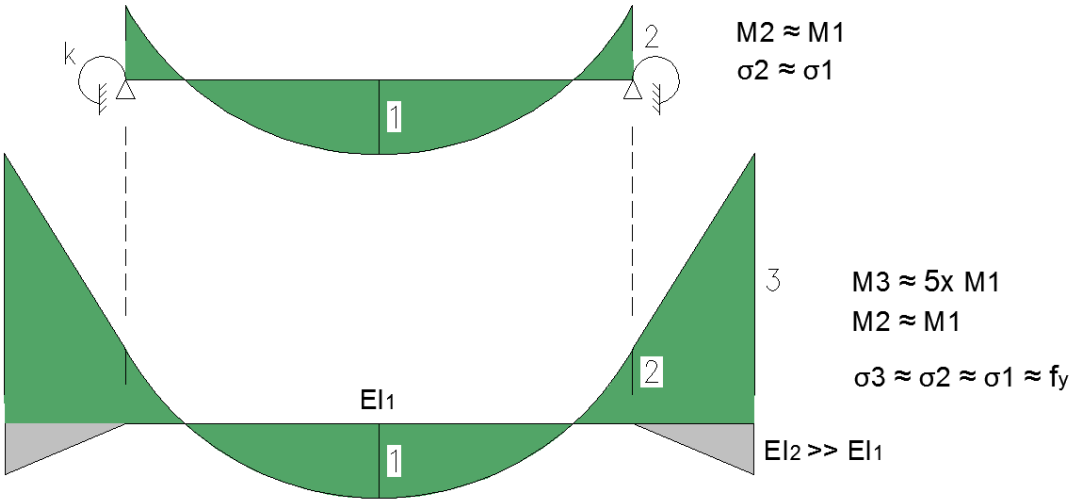

Fig. 3.6 Bending moments and stresses comparison for beams with flexural end fixings

3.3 Beams arrangement in cross-section of the bridge

In bridges with welded girders 2 or more girders are used in cross-section of the bridge. In bridges with rolled girders and span length of about 40 m at least 4 girders are used. Two bridges are analyzed (30 m long, 12 m width) – in one of them girders are equally spaced on entire width of slab, in the second one girders are grouped in two tandems, as it is presented in Fig. 3.7.

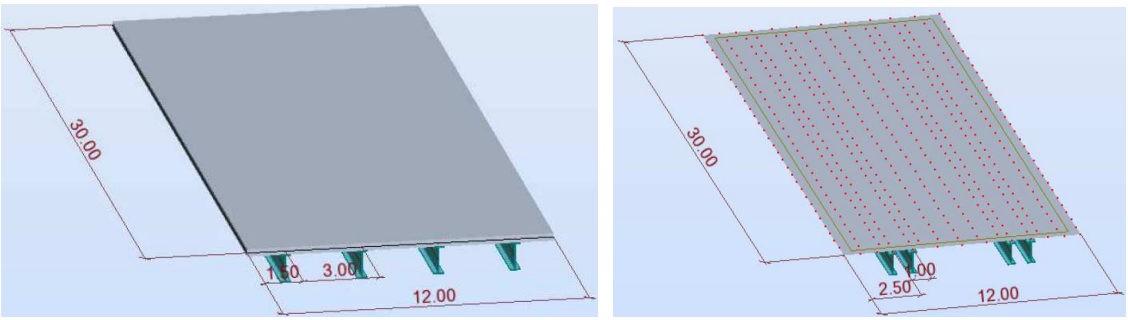

Fig. 3.7 Two possible arrangements of beams in cross-section of the bridge (example)

Arrangement of girders is of minor importance in case of dead load only, because it is distributed usually equal (or almost equal) to all girders in both above presented solutions. It is more important for distribution of traffic loads which are asymmetric. Assuming that half of the bridge's width is loaded, then 2-girder system is more favorable. Stresses in edge beam are about 5 % smaller than if equal spacing of girders is the case.

Thus for new system it is proposed to join 2 rolled girders in tandems (with spacing of beams in 1 tandem of about 1 – 1,2 m) in order to obtain equivalent solution as in 2-girder bridge. Instead of 4 girders in equal spacing solution with 2 tandems will usually be taken into account, what is the second key aspect of new system (but if specific solutions for cross-sections (see 3.4) fit better to single girders then tandem-solution can be rejected). Advantage of a little bit better work of tandems under asymmetric loads are not so important here as following issues:

a. during erection stages beams connected in tandems are not prone to lateral-torsional buckling. Casting a concrete slab is then possible without (or with if necessary) temporary supports,
b. space between beams can be filled with concrete in support regions, what enables to achieve (together with additional treatments) very stiff support cross-section.

Drawback of using tandems is need to use thicker (or transversally strongly reinforced) slab because its supports will be in bigger spacing. Static calculations can prove that slab with variable thickness of e.g. 0,35 m in tandems line and 0,25 m in longitudinal bridge axis is sufficient for axial spacing of tandems min. 8,00 m (if strong reinforced even more, there are known examples of 2-girder bridges built in VFT technology in Germany with slabs of 0,30 m and bigger spacing of girders then analyzed in new system).

3.4 Possible solutions of support sections

As presented in 3.2 application of rolled girders in spans exceeding 40 m requires using an extensive support cross-sections. Correct construction of this zone is key aspect of new system. The assumption is that support zone is made out of rolled girders, but because stiffness of cross-section has to be much bigger, construction height has to be increased. This can be obtained in different ways. Hereafter descriptions of a few solutions and essential remarks are made to show how new system was developed leading to final solutions. Of course any of described solutions can be applied in design but depending on individual project one of them will be more economic then others.

The first approach to solve a support zone is presented in Fig. 3.8. Support zone is created with rolled girders cut and welded to girders in mid-span with some inclination. Increased height of support section is achieved with concrete web. Technology of realization assumes casting concrete in two stages – at first concrete web, upper part of pillar and thin slab (ca. 0,12 m) are casted and secondly concrete deck. This allows frame work also at stage of deck casting.

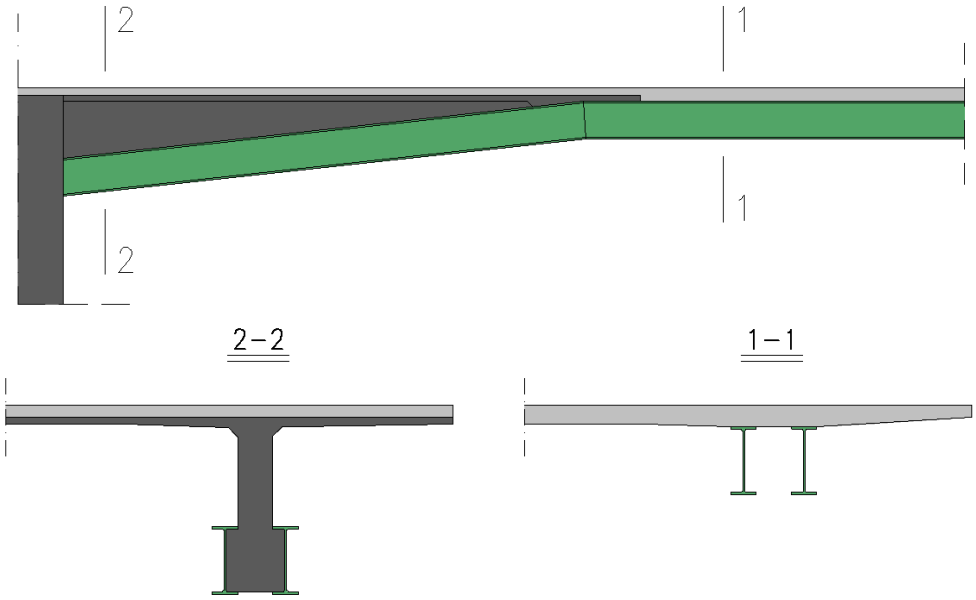

Fig. 3.8 Side view and cross-sections for solution no. 1

Disadvantage of this solution is placing a lot of concrete in tensile zone, while steel beams are present in compression zone. Cracking of concrete in web area and at bottom side of slab can be visible. Also need to make a butt weld to join two segments of steel girder is a drawback of this solution. Advantage is frame work also at a stage of deck concreting and no problems with tolerances at construction stages.

To eliminate some of abovementioned problems support zone can be constructed in different way. System is reversed – steel girders are led straight and concrete is placed below them – Fig. 3.9.

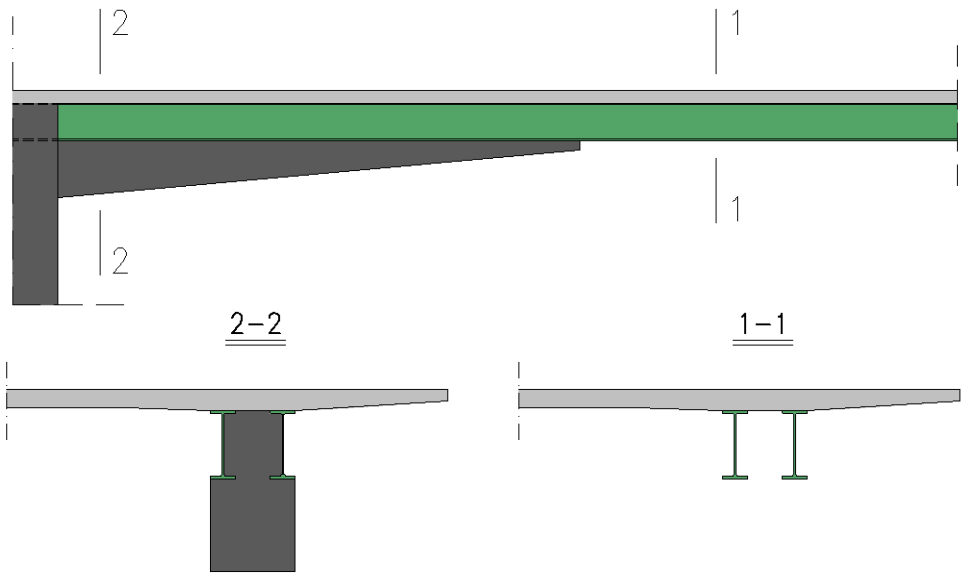

Fig. 3.9 Side view and cross-sections for solution no. 2

Also 2-staged concrete casting can be applied with concreting at first only concrete below beams and in between them, and then the deck. In this solution steel girders are above neutral axis of support cross-section so steel will take tensile stresses what is favorable. Also concrete works in proper conditions as it will be compressed. This applies in both deck concreting stage as well as in exploitation phase. Disadvantage of this solution is relatively big concrete consumption for space between girders, where concrete is still in tensile zone. Therefore it generates additional dead load and increased costs of materials. This can be solved if tandem solution is substituted with equal spacing of girders in cross section of the bridge, as presented in Fig. 3.10.

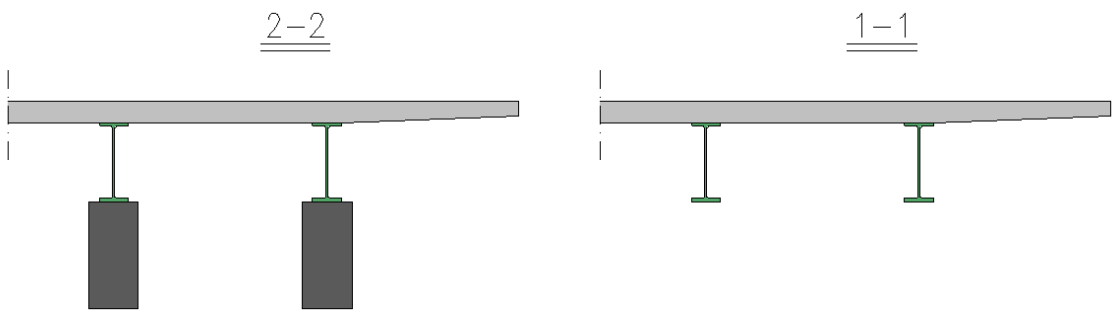

Fig. 3.10 Side view and cross-sections for solution no. 3

In such a case segments of girders with concrete below can be easily prefabricated, casted upside down one next to each other and then separated. Because maximum spacing of girders is smaller concrete slab can be thinner or transversally less reinforced. More problematic is for it to provide stability against lateral-torsional buckling during deck concreting.

Presented solutions are economic up to span length about 50 m. Length of support zone strengthened with concrete blocks is variable but is about 25 % of span length, depending on individual project. The longer span is, the longer support zone should be designed to achieve proper bending moments distribution between mid-span and support zone. Thus for longer spans weight of concrete parts will increase significantly causing increase of:

a. internal forces – need to provide more rebar, structural steel etc.,
b. vertical reactions transferred to foundation – need to expand foundations,
c. concrete volume – its price itself.

Advantage of solutions no. 1, 2 and 3 will be economic and favorable for contractors dealing more eager with concrete. Steelworks are here reduced to minimum. Connections in zone of frame corners are made out of casted concrete without additional in-situ welding.

For bridges with span length more than 50 m and for contractors who deal rather with structural steel than with concrete other solutions are recommended. Heavy concrete blocks can be successfully substituted by increase of height of steel section itself. This is achieved by cutting along I-beam into two T-beams. Lower T-beam is welded with some inclination while upper T-beam remains straight. This way the empty space between upper and lower T-beams

is obtain which should be filled with flat plate (Fig. 3.11) or with truss (Fig. 3.12). Choice between these two will be dictated by span length. 50 – 60 m spans will be rather more economic if full-web girders will be designed. From 60 m to about 80 m truss solutions will be more economic. However both solutions are possible for any ranges of spans from 45 to 80 m.

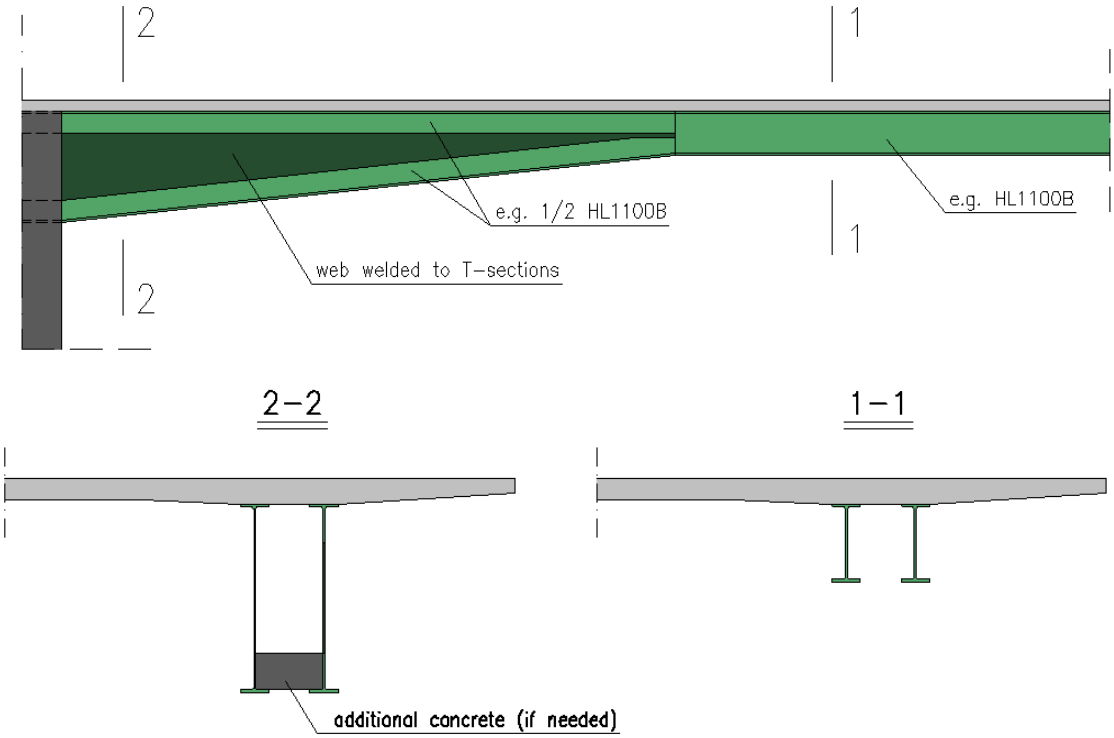

Fig. 3.11 Side view and cross-sections for solution no. 4 (span length up to 60 m)

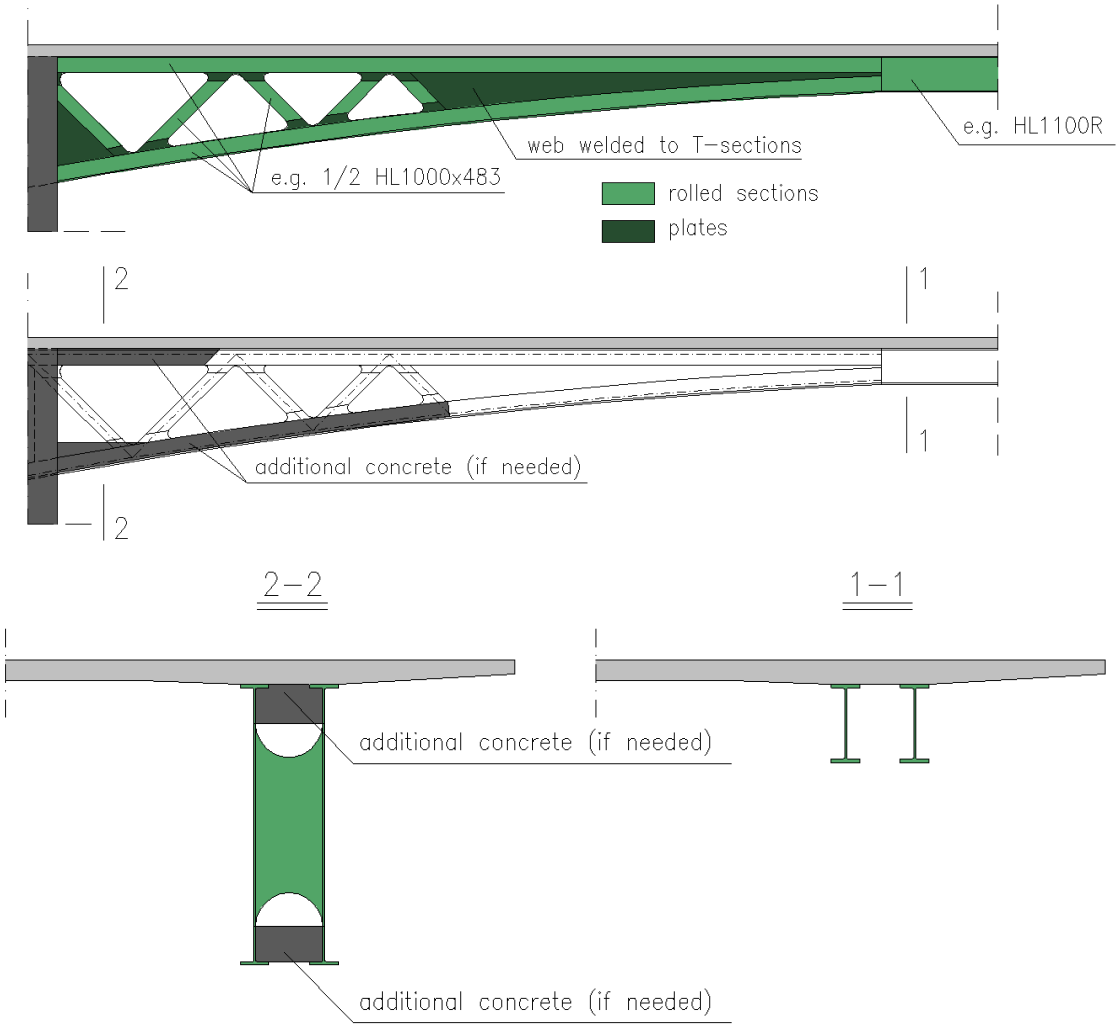

Fig. 3.12 Side view, longitudinal section and cross-sections for solution no. 5 (span length up to 80 m)

Technology of realization is very similar to solutions no. 1 – 3. At first pillars up to deck level are concreted and then concrete deck is casted. This enables the static system to be a frame also at stage of slab concreting. If additional concrete is to be casted also as a strengthening of lower chord it can be made at stage of pillar or deck concreting depending on need. Strengthening of upper chord with concrete, if needed, may be cast together with the deck.

General side view on bridge with span of 80 m is presented in Fig. 3.13. Cross-section height in mid-span is 1,45 m, in support zone approx. 4,80 m. Length of segments with variable height is 32 m, mid-span's straight segment – 16 m.

Fig. 3.13 General side visualization of bridge with span of 80 m

In all presented solutions inclination angle of the bottom line of support zone should be verified in individual project but in general should be of about 1:10. This parameter as well as support zone's length (general 20 – 40 % of span's length) should enforce desired distribution of bending moments throughout all span length.

3.5 Static system of bridge

In all analyzed solution frame static system or system of continuous beam is considered. Continuous beam system will be less efficient than frame one. Static calculations can prove that mean stress value in mid-span region in bottom flange of the girder is lower about 10 % in frames than in continuous beams. It allows for reducing steel consumption of 10 %, what is enough reason to design frames instead of beams, if other aspects allow for that. Because support sections are very stiff there is usually no problem with their bending resistance. Placing concrete in lower part of support sections imposes frame system as the most suitable. Frame corner is made entirely out of concrete what allows in frame system to obtain very favourable executive tolerances.

However, the most important issue, when frame system is adopted, is the possibility of reduction of foundation works. Pillars on one row of piles can be then easily designed what reduces significantly total cost of the bridge. Frames are also easier to maintain for bridge administration, because bearings are excluded. For longer bridges this issue shall not be ignored because changing bearings is connected usually with big costs and interruptions in traffic flow.

3.6 General conclusions

In chapters 3.1 – 3.5 key aspects of new system are presented. Economy of analyzed solution is very complex issue and it is not proper to consider only costs of span's materials, but also pillars, foundations and costs of realization (time-consumption, technology, required tolerances etc.). Below major advantages and disadvantages / limitations of the new system are presented.

Advantages:

a. allows application of hot-rolled girders in spans up to about 80 m, what was not achievable before,
b. system is easy to optimize, steel and concrete are placed in proper regions in construction carrying tension and compression, respectively,
c. various technology of deck casting are possible (without or with lost formworks, at first support zones and then at mid-span if support stiffness is required also at stage of

span concreting, entire deck at once etc.). For frame system usually deck is casted after frame action is ensured, so cracking of concrete is of minor importance,

d. tandems of girders ensure easy protection against lateral-torsional buckling at concreting stages,
e. system is specially dedicated to multi-span frames – better material consumptions are then achieved, required tolerances are more favorable, big cost's savings are obtained in foundations as they can be designed on single row of piles,
f. steel profiles of bottom chord next to pillar can be easily strengthened by additional concrete located between individual T-profiles (this concrete is to be casted once steel structure is working under self-weight already).

Disadvantages and limitations:

a. if solution with concrete blocks between rolled girders is used, then increase of concrete consumption is about 0,10 m^3/m^2. Concrete between rolled girders is not necessary from strength of material's point of view but there are no technical possibility to neglect it without problems with durability (lack of accessibility to interior of tandems),
b. if two tandems are used then total width of bridge has to be limited. Thus 2-tandems solutions are useful rather for narrow bridges,
c. thicker concrete deck resulting from big tandem spacing – increase of concrete consumption about 0,05 m^3/m^2,
d. system is dedicated to multi-span systems, will rather not be useful to single span objects,

Presented disadvantages should not be treated as negative aspects which should be eliminated, but are just part of the system. Increased concrete consumption is acceptable if cost of spare structural steel will be bigger. Furthermore total cost of the bridge, including costs of foundations, seems to be very competitive to existing solutions with plated girders. Possible market success of described solutions is a result of several factors that should occur together, especially:

a. using of steel grade S460, what gives advantage over plated girders made out of S355 steel grade (and over relatively expensive yet S460 plates),
b. using a frame system, what allows for reduction of foundations costs (single row of piles per each pillar),
c. using of prefabricated slab elements as lost formworks if possible, because it allows for big time savings and makes deck concreting much easier.

3.7 Final solution

On the basis of analytical studies and realistic market offers for number of bridges with span varying up to 80 m and various contractors, the final solution to focus on is clarified. This is semi-integral or continuous beam bridge with main spans approximately of 50 m,

two tandems with variable construction height using welded plate between T sections at supports (compare Fig. 3.11). Hereafter reasons for this particular choice are described.

The assumption for using tandems instead of single girders is justified by two aspects (see Fig. 3.14):

1. LT buckling of steel beams during construction stages can be easily avoided by means of e.g. temporary bracings. Using steel tandems themselves as supporting structures for slab casting stages is a preferable solution for hot-rolled girders (because of bi-symmetry of section) contrary to VFT method (upper flange material is not fully utilized so generates additional costs),
2. concrete can be easily casted between single profiles to strengthen compression flange in negative bending regions, what is a cost-sparing solution contrary to e.g. welding of additional plates. This solution prevents also buckling of compressed flange in final stage.

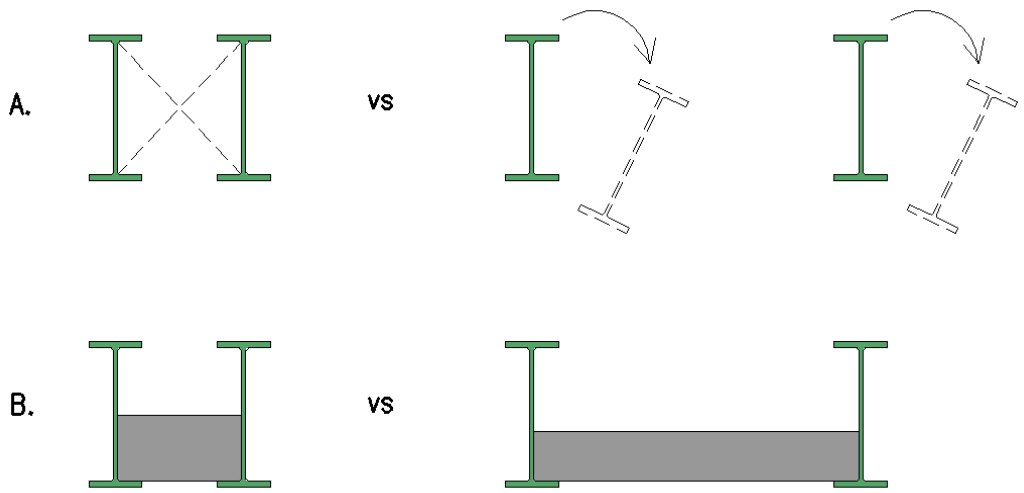

Fig. 3.14 Advantage of tandems over single girders in easy of: A. temporary bracing against LT buckling, B. compressed flange strengthening by means of cast-in-situ concrete

These two factors together make solution with tandems being justified, each single one can be handled different ways of course. If single girders in relatively big spacing are used, presented benefits may also be achieved, but by means of greater effort and therefore increased costs of investment.

As 2-girder bridge is preferable solution, it leads to configuration 2x2 of rolled sections. The factor of limitation of width of bridge appears because of transversal action of bridge deck. It leads to conclusion, that usually width of bridge of approx. 14,5 m would be the limit. Then variable height of concrete deck of 0,25 – 0,30 m between girders and 0,35 m over the girders may be expected. It should be stated that this width of bridge covers majority of bridges, because enables design of 2-lines road and both-sided pavements or 3-line road with one-side pavement.

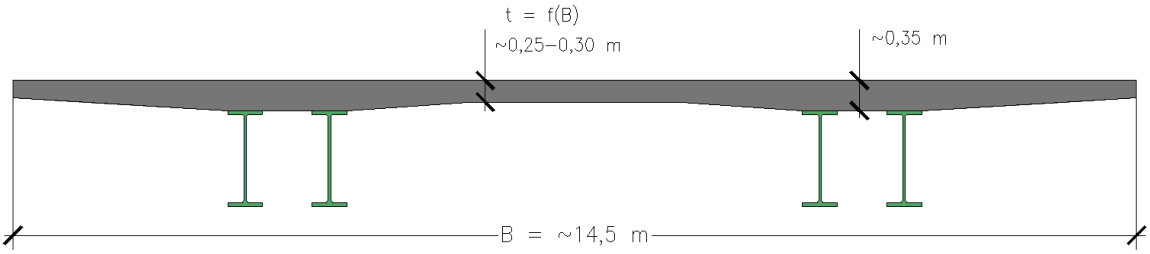

Fig. 3.15 Cross – section of bridge superstructure

Assuming that different solutions for support zone are possible to get variable construction height, solution is almost free to cover different span lengths. Concluding from previous studies and contractors comments (concerning real market offers) plated solution is proposed for relatively small span lengths and truss solution for bigger lengths. But the basic solution can be considered as plated one, because truss part is followed by plated (kind of transition zone between straight part by rolled section and truss part). Hence fundamental question appears, **what is the limit of height of plated part? Considering technology of realization the answer is 2,5 m**. Of course higher sections might be used , but the aim is to establish easy system and this limit appears due to transportation issues. Moreover, considering other aspects it will be justified by other factors also.

Assuming 2,50 m of steel section at support and 0,35 m of slab thickness one can get height of construction h_2 = 2,50 + 0,35 = 2,85 m at support and h_1 = 1,10 + 0,35 =1,45 m in mid-span. With span length of 50 m one can calculate slenderness L / h_1 = 50 / 1,45 = 34,5 (what fits in range 25 to 35 justified for composite bridge with haunches) and L / h_2 = 50 / 2,85 = 17,5 (what fits in range 15 to 19 justified for composite bridge with haunches). The conclusion is that it leads to rather slender bridge and span length more than 50 m can appear to be less economic. Considering technology of fabrication and realization (see also Fig. 3.16 and Fig. 3.17):

- the parts of *L* = 50 m span can be delivered in two segments with lengths 2 x 25 m,
- only single temporary support per span is needed, if assembly method assumes segments welding at target elevation level of girders, or this is even possible to assembly the bridge without any temporary supports using heavy crane and assuming segments welding at ground level.

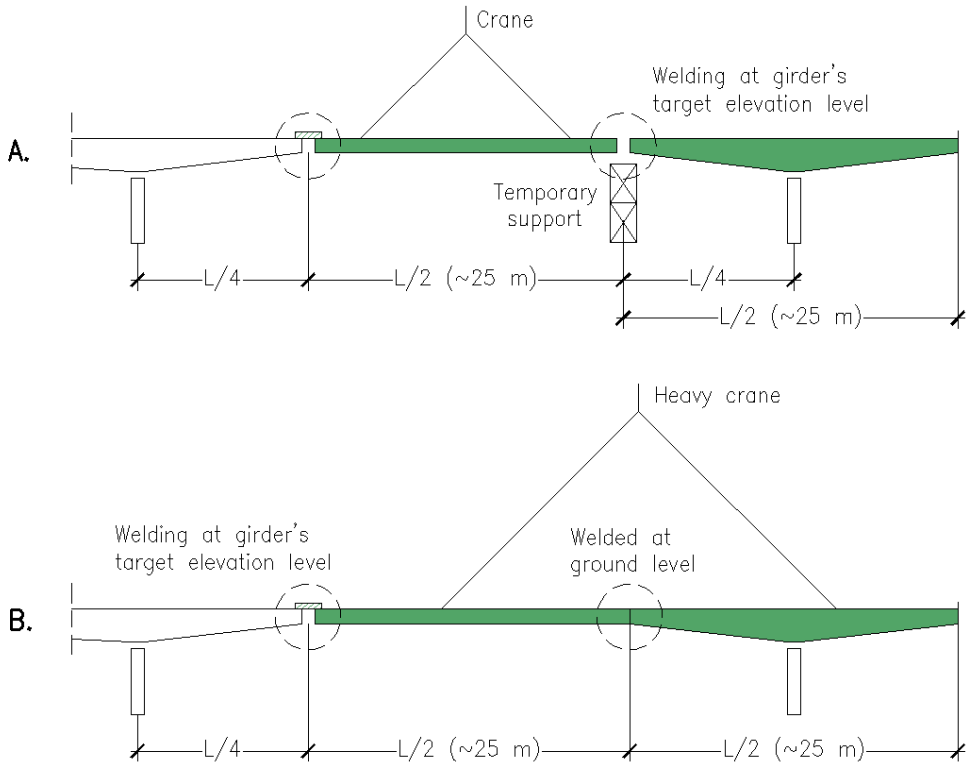

Fig. 3.16 Two possible assembly methods: A. with temporary supports and light crane or B. without any temporary supports but with heavy crane

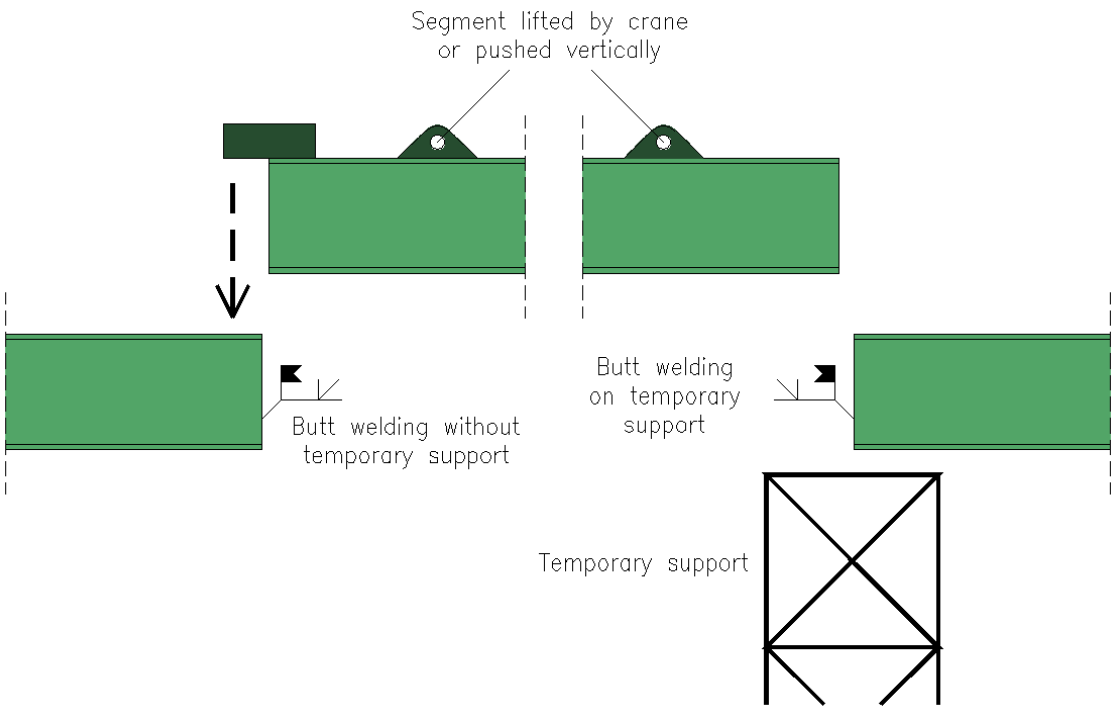

Fig. 3.17 Details of segments connections alternatives

What is important, that even if temporary support is used, it is supposed to carry only dead weight of steel girders and small technological loads, and right after welding works are done it can be removed.

Assembly and technology are often key aspects – technology should not be limited by large numbers of boundary conditions. It should be suitable for all contractors. Good technology should offer many possibilities to build the same solution. Each contractor prefers his own technology. And this is fully fulfilled in case of proposed solution. As abovementioned single temporary support (only for welding) and light cranes for lifting 25 ton segments 25 m long can be used. Alternatively, entire 50 m long tandems (50 tons) by large crane without using any temporary supports can be lifted or pushed vertically. Also the case of tandem's beams bracing against LT buckling can be solved in many ways. Beams in tandems can be welded permanently or removable, temporary bracings can be used only for concrete casting stage, what is very cheap. Flexible technology of realization and simple design rule that bisymmetric steel shape handles the weight of wet concrete causes that the system becomes very efficient.

Technological aspects lead to conclusion that the most desired solution is multispan bridge with internal spans of about 50 m. This solution can be used for smaller spans of course – until straight simple section appears more economic due to fabrication costs. Another question appears: **how many spans are to be covered by the system?** The answer has background in the market analysis of various solutions offered for bridges with similar span lengths. Spans approx. of 50 m are typical for prestressed concrete, and prestressed concrete is becoming more and more economic with increasing number of spans. This is because longitudinal launching can be used (and the price for fabrication stand for launching is calculated per bridge, not per span). This is why the smaller number of spans the more competitive is composite system based on rolled girders (comparing to prestressed concrete). Hence in case of bridge with few spans only proposed solution can generate smaller entire cost of bridge because of easy erasing even if using more expensive material (steel). It can be concluded, that on this background the most economic would be 3-span solution approx. 40 + 50 + 40 m (or 2-span solution 40 + 40 m). It does not limit larger number of spans, but single span frames are excluded (with current variant of system), because for proposed technology self-balanced bending moment above supports is needed.

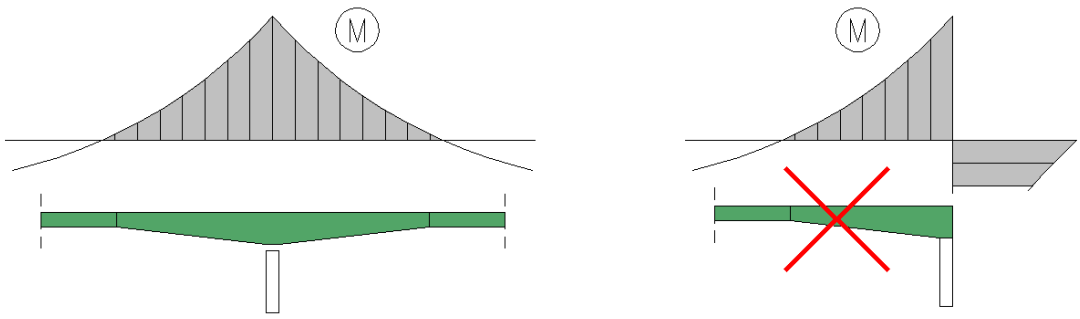

Fig. 3.18 Desired static system ensuring self-balanced bending moment over support

In this point very important aspect is faced: **integral solution or continuous beam should be design?** Considering bridges with few spans we are able to implement integral solutions without any problems, contrary to long prestressed concrete bridges. This way we are becoming much more economic in total costs of bridge including costs of abutments and foundations. In general **the worse soil conditions – the more economical is proposed solution comparing to prestressed concrete** (or other solutions, which generate big dead loads and which are based on static system of continuous beam). Taking into account, that casting of concrete without temporary supports (because of using bisymmetric hot-rolled beams) is allowed and self-balanced support zone is designed, target solution should be **semi-integral bridge supported on single row of piles**. The aspect of integral (semi-integral) action is very important in total economy and this aspect is one of the most important in general.

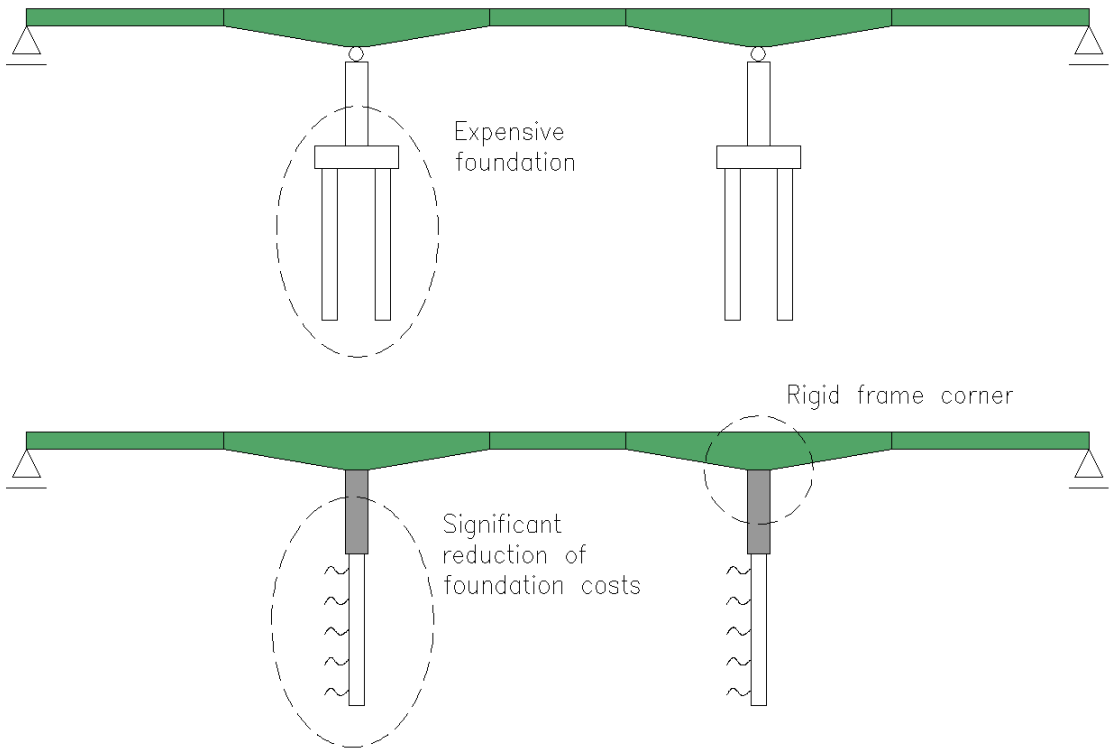

Fig. 3.19 Idea of foundations cost-sparing solution of semi-integral bridge comparing to continuous beam

Full integral solutions (both pillars and abutments are integrated) can be also considered but for multi-span bridges it is not standard solution yet nowadays. Influence of thermal elongation of long bridge and its effect on ground behind abutments is not well-known yet. Semi-integral static systems are now fully justified.

Another important aspect is a technology of deck casting. **Concrete deck can be realized in different ways and it does not influence general design procedure** based on principle, that tandems will not lose their stability under wet concrete weight. Deck can be erected for example in 3 ways (Fig. 3.20):

- as an in-situ casted concrete slab on traditional formworks,
- as an in-situ casted concrete on Filigree prefabricates,
- as a VTR technology (fully prefabricated slab with in-situ casted joints).

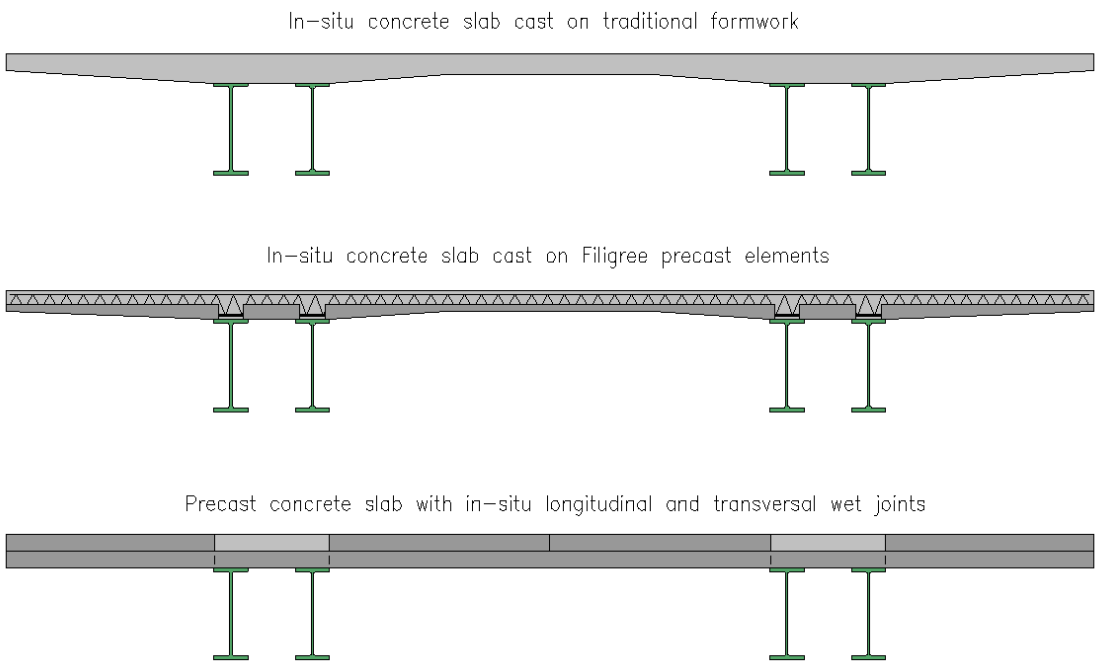

Fig. 3.20 Possible technologies for concrete deck erection

Especially VTR looks promising in future because it solves somehow problem of limited height of rolled sections. Height of composite section can be then approx. 0,15 m bigger than for other proposed slab erection methods.

Finally aspect of fabrication of beam with variable height in support regions appears. It is to be solved using simple butt welding of steel structure, as presented below in Fig. 3.21.

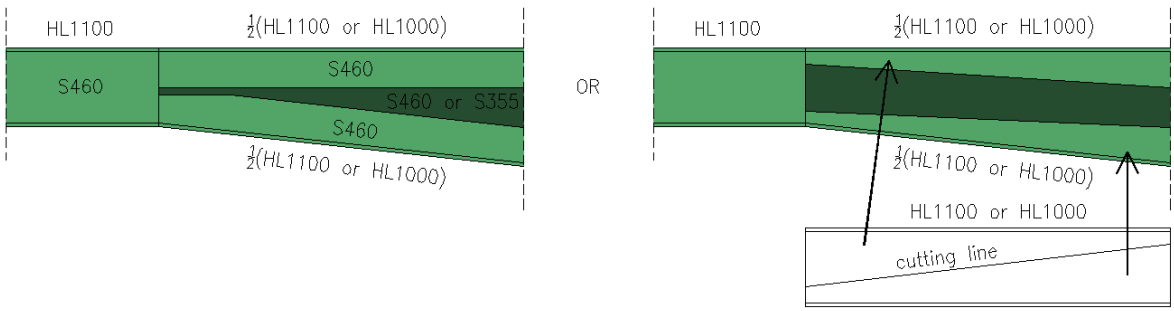

Fig. 3.21 Support zone – flat plate welded in-between cut in half HL profiles

Introduction of concrete between steel section is cheap procedure because not complicated formwork is needed. It is still open question which construction stage is the best to apply bot-

tom concrete between steel shapes – it can be clarified in detail design stage with detailed calculations. Assuming nonlinear relationship stress-strain for concrete according to EC2 it looks to be possible to introduce concrete before in-situ slab is casted. Alternatively, it is considered to realize it together with in-situ slab, but this solution looks to be less favourable. At this stage it is assumed for safe side that steel bracings (T-shapes) are needed for buckling to connect bottom flanges but eventually it will be possible to omit these elements if bottom concrete is to be casted before in-situ slab. Assuming bottom concrete slab thickness of about 0,5 m and section HL1100B one can notice, that resistance for compression of concrete block is comparable to resistance of steel part. Assuming that "steel + wet concrete" phase generates half of total stresses, 25% reduction of stresses in steel bottom flange can be achieved (comparing to pure steel section) even if bottom concrete is casted together with in-situ slab. Variable level of bottom steel flange with horizontal level of wet concrete (gravity) results in variable thickness of bottom concrete slab (and this is justified by static analysis also). Usual C30/37 looks to be reasonable solution here, if elastic analysis is performed by superposition of stresses. Plastic resistance for bending would be of course more efficient but this approach is rather not used in bridge design. Of course the choice of bridge calculation method – elastic or plastic analysis – is always to be made by designer. Another advantage of using concrete slab connecting two compressed bottom flanges is ensuring their lateral stability during exploitation. Idea of this solution is presented in Fig. 3.22.

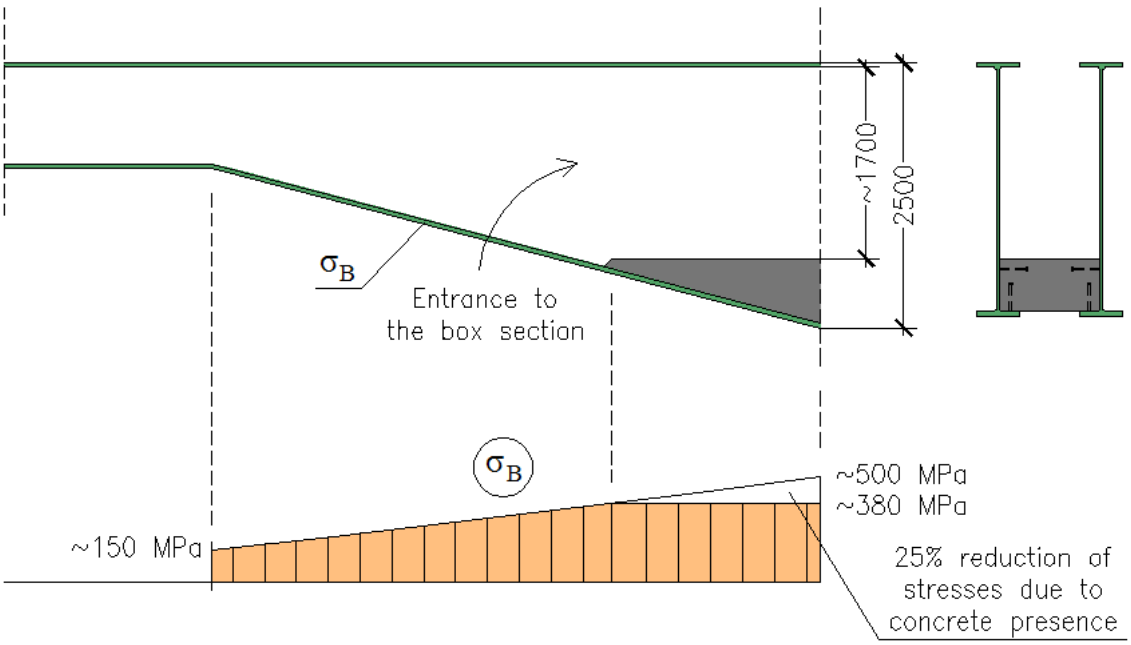

Fig. 3.22 Idea of lower flange strengthening with concrete bottom slab

This way final solution is proposed. This solution can be used in continuous beam and in semi-integral system. The latest will result in better steel consumption and more economic foundations. General drawing of final solution, an example of technology of realization, idea of details is shown in Draw. No. 1 attached to the documentation.

4 WP 1.2 DESIGN RULES AND BACKGROUND

Conclusions coming from *Engineering logic* lead to formulate below mentioned rules and recommendations. It is self-evident that every bridge may be different and every design may differ from each other, but one should fulfil general requirements of appropriate standards (e.g. stated in chapter 2). Thus design rules and design approach proposed in this chapter should be treated as recommendation and may be customized to particular needs. Hereafter described design rules are used in design example in chapter 5 and 6.

4.1 General geometry

On basis of preliminary static calculations, interviews with steel contractors and erectors one can propose general dimensions of the bridge, as presented in figures below.

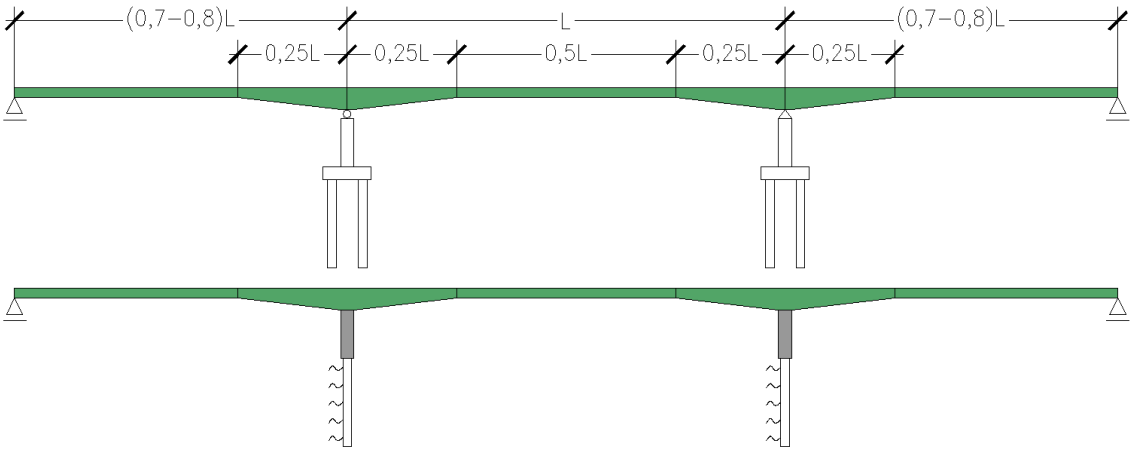

Fig. 4.1 Recommended haunches lengths

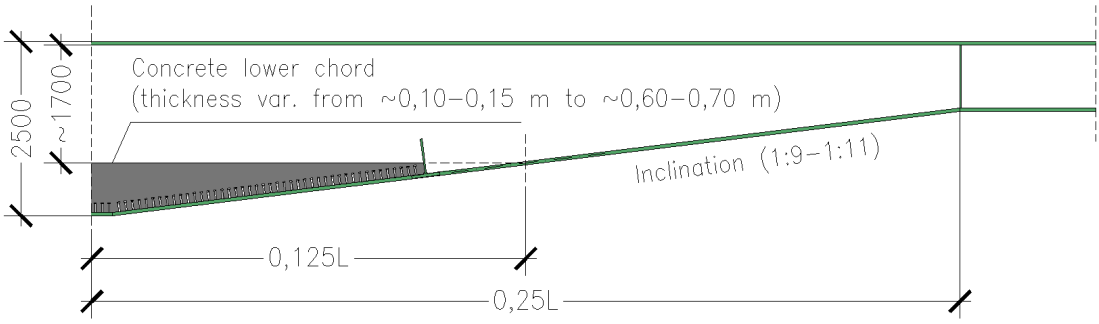

Fig. 4.2 Recommended support zone parameters

Lower concrete chord ends with lower cross beam connecting two I-beams within one tandem. This cross beam acts as a formwork for concrete casting stage, as well as lateral torsional bracing in a steel superstructure assembling stage and lower concrete casting stage.

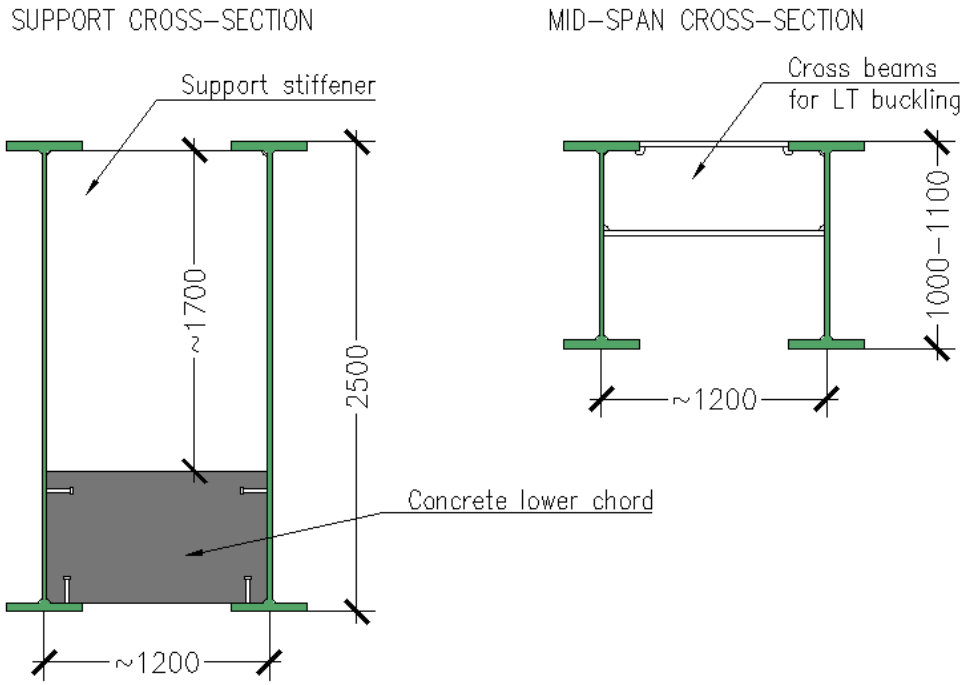

Fig. 4.3 Recommended cross-sections

Any of dimensions presented above can by changed to adjust it to need of particular project. Some crucial aspects need be then taken then into account:

1. haunches lengths determinates amount of welding works as haunches are obtained from along-cut I-beam with additional flat plates welded in between halved I-beams. Therefor haunches should not be too long, but on the other hand they are necessary to generate big stiffness of support zone necessary for reducing bending moments in mid-span regions. Haunches lengths of 0,25L are reasonable, but for particular project small changes may be favourable,

2. haunches height assumed of not more then 2,50 m are easy to transport. Increase in haunches height, even if favourable from static point of view, should be cross-considered with cost calculation taking into account transportation issues,

3. haunches inclination angle, assumed as 1:9 – 1:11 (approx. 1:10) is usually enough to obtain sufficient stiffness of support zone. One should remember that the greater angle of inclination the bigger part of vertical shear force is taken by lower flange. For angles approx. 1:10 this effect can be neglected in stress calculations, because lower flanges in support zone have some margin in resistance. For greater angles this effect should be taken into account,

4. usually to ensure enough resistance of lower flange, as well as to obtain enough stiffness of support zone, lower concrete chord is casted. If in particular project this concrete chord is not needed, it can be omitted. One should remember that this element affects not only cross-sectional resistance and stiffness, but also ensures local stability of the web and global stability of I-beam in hogging bending moment regions. If proposed geometry is used influence of lateral-torsional buckling on increase of stresses in lower flanges can be omitted. Length of lower concrete chord can be appropriate adjusted, if needed,

5. spacing of I-beams in one tandem is set as 1,20 m. This spacing (and smaller spacing) enables model of 2-girger bridge, where 1 girder in the model represents geometrical parameters of 2 I-beams. If needed bigger spacing can be used, but then every single girder should be reflected in FE model. Preliminary calculations shown that in tandem bridge steel consumption is approx. 5 % smaller. The bigger spacing the more troublesome is ensuring the LT resistance in deck casting stage,

6. cross-beams in mid-span regions can be replaced by a temporary LT bracings. Their task is to prevent LT buckling in the deck casting stage. After deck concrete is hardened cross-beams has no function any more.

4.2 FEA assumptions

Finite element analysis (FEA) is always an individual matter of particular designer. But a later shown calculations in chapter 5 (*Case study*) and a consecutive cross-checked analysis in chapter 6 (*Validation report*) proved, that some simplifications can be adopted for creating structural model and structure dimensioning.

Static calculations should take into account construction stages, especially below-mentioned.

- Stage 1 – steel superstructure assembling using temporary supports.

  This stage should in general cover a few pre-stages leading to obtain fully assembled steel superstructure after removing the last required temporary support. Taking into account, that weight of steel superstructure is relatively small comparing to other loads and that pre-stages affect final result of considered stage in a negligible way, it can be assumed that for predesign only the target stage of steel structure assembling is considered.

  All load are taken by steel structure alone. Depending on spacing of temporary anti LT bracings or cross beams, lateral-torsional buckling should or should not be taken into account.

- Stage 2 – casting a concrete strengthening a lower flange of steel girders in support zone regions.

  This stage covers in general dead-weight of wet concrete of additional lower concrete chord in support zone regions and of formworks needed to cast it and cast a concrete deck (it is a safe assumption that formworks for lower chord and deck casting are prepared at the same time). For predesign dead-weight of formworks can be excluded from analysis as its effect is relatively small. Formworks are however removed after concrete is hardened, but applying and removing this load is made in different stages.

  All load are taken by steel structure alone. Depending on spacing of temporary anti LT bracings or cross beams, lateral-torsional buckling should or should not be taken into account.

- Stage 3 – casting a concrete deck.

  This stage covers in general dead-weight of wet concrete of concrete deck.

  All load are taken by steel structure alone in mid-span regions, but in intermediate support zone regions a lower flanges of tandems are already strengthened by a concrete chords, what is taken into account in calculating cross-sectional parameters. Depending on spacing of temporary anti LT bracings or cross beams, lateral-torsional buckling in mid-span regions should or should not be taken into account. In support zone regions lower concrete chord can be treated as sufficient restraint against LT buckling.

  As a simplification in static analysis, both effects of creep of concrete in lower concrete chord, as well as an effect of inelastic strains in concrete, are taken into account in elastic linear analysis by replacing, irrespective of load case, a concrete modulus of elasticity E_{cm} by a substitute modulus $E_{c,FEA}$, as below:

$$E_{c,FEA} = \min \begin{cases} \dfrac{E_{cm}}{1+1{,}1\cdot\varphi} & (1) \\ \dfrac{f_{cm}}{\varepsilon_{cu3}} & (2) \end{cases}$$

  Equation (1) takes into account creep of concrete for long-term actions. Equation (2) takes into account excluding a risk of crushing of concrete after reaching its compressive strength at certain strains (ε_{c3}) and further strains increase till reaching ultimate strains (ε_{cu3}). Graphical explanation of taken assumption is shown in Fig. 4.4 and Fig. 4.5.

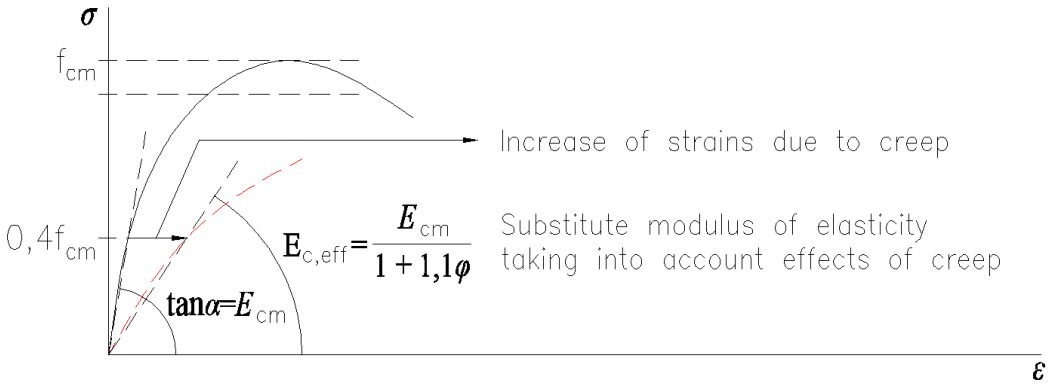

Fig. 4.4 Creep effect on value of concrete substitute modulus of elasticity

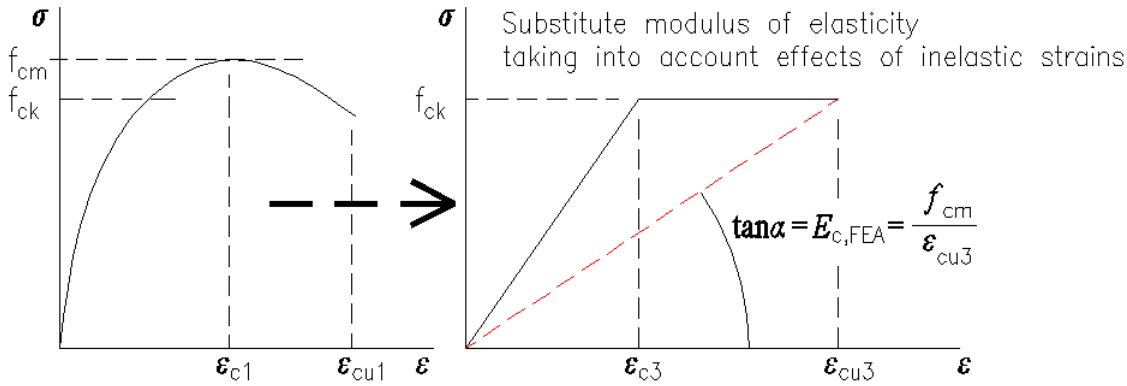

Fig. 4.5 Concrete inelastic behaviour effect on value of concrete substitute modulus of elasticity

Taking into analysis a substitute modulus $E_{c,FEA}$ to linear elastic calculations of entire structure is a safe-sided assumption allowing for exceeding of ε_{c3} strains without risk of crushing of concrete and without a need to change analysis to material nonlinear one. Stresses in concrete obtained from dimensioning should be limited then to $0{,}85f_{cd}$, as usually adopted in plastic resistance dimensioning of composite sections.

Shrinkage of concrete in lower concrete chord can be calculated in an ordinary way, according to [11], but preliminary calculations can show that it influences only support zone, which has usually significant safety margin. Shrinkage of concrete in lower chord can be omitted.

- Stage 4 – erection of surface layers and installation of equipment,

  and

- Stage 5 – exploitation of the bridge.

  In stage 4 dead weight of equipment is imposed to the structure (and if earlier dead weight of formworks were applied, in this stage they should be cancelled), in stage 5

all short-term actions including thermal effects, variable traffic loads. Also long term forced actions should be applied like unequal foundation settlements, creep and shrinkage of concrete deck.

Stage 4 and 5 describes a target geometry of entire structure. If beam model is used, then following simplification may be adopted:

- 2 beams in 1 tandem may be reflected by one substitute single beam with geometric characteristic of entire tandem. Axis of substitute beam coincides with tandem's axis,
- effective width of concrete deck should be calculated according to [11],
- length of cracked concrete deck in intermediate support regions may be assumed to be of 15 % of span length (as in [11]),
- shrinkage of concrete in lower concrete chord may be neglected,
- creep and shrinkage of concrete deck should be calculated only at effective width of the deck.

4.3 Cross – sections dimensioning

All critical cross-sections should be calculated according to appropriate standards ([2] – [12]) proving their elastic resistance, taking into account strength of materials as follows:

- f_{yd} – for tensioned and compressed structural steel,
- f_{sd} – for tensioned and compressed reinforcement (in general compressed rebar may be omitted, unless its presence is necessary for resistance guarantee),
- f_{cd} – for compressed concrete in the deck,
- 0,85 f_{cd} – for compressed concrete in the lower concrete chord (factor 0,85 according to [11] is adopted, because strains exceeding ε_{c3} are allowed, what takes into account modified elastic modulus $E_{c,FEA}$).

Hereafter a general algorithm of resistance checks in limit states is presented. Procedures described in standards are not shown, because do not differ from normal bridge design approaches. Algorithm consists of stress calculations in every construction stages, their summing and compering to allowable stresses.

1. Stage 1

Cross-sectional characteristics should be determined on basis of geometry shown in Fig. 4.6. In a first step web class should be checked, because a 4th class of cross section may be obtained in support zones. If this is a case, then cross-sectional geometric parameters should be calculated according to [9] as an effective ones. Mid-span cross-section, as hot-rolled section intended to bending, shall not be exposed to local instability problems.

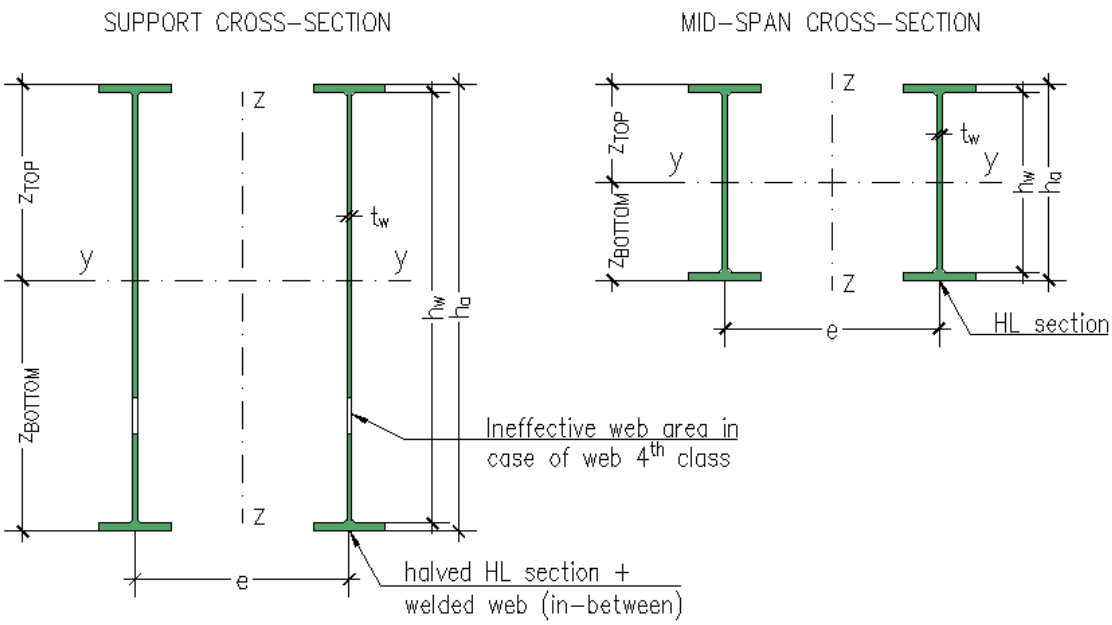

Fig. 4.6 Cross-sectional geometry for stage 1 and 2 analysis

Stresses in top and bottom fibres of cross-section are to be calculated as follows:

- for support cross-section:

$$\sigma_{TOP} = \frac{M \cdot z_{TOP}}{I_{eff,y}}$$

$$\sigma_{BOTTOM} = \frac{M \cdot z_{BOTTOM}}{I_{eff,y} \cdot \chi_{LT}}$$

If geometry proposed in chapter 4 is used without significant modifications then lateral-torsional buckling has negligible influence on overall stresses in bottom flange of the section. This is because: firstly, stresses from stage no. 1 and 2 are rather small so increase of stresses due to instability is also rather small and secondly, in a target geometry bottom flange is restrained by concrete chord preventing it from any lateral displacements. Apart from abovementioned, support zone has usually relatively big re-

serves in a bending resistance (this is usually not a critical section). This is why factor χ_{LT} may be then assumed to be 1,00.

- for mid-span cross-section:

$$\sigma_{TOP} = \frac{M \cdot z_{TOP}}{I_y \cdot \chi_{LT}}$$

$$\sigma_{BOTTOM} = \frac{M \cdot z_{BOTTOM}}{I_y}$$

Factor χ_{LT} should be calculated according to [8] taking into account stiffness and spacing of temporary lateral-torsional bracings or cross beams. It is easy to calculate spacing necessary to exclude danger of LT buckling, thus to assume value of coefficient equal to 1,00. This is always left for individual consideration. Impact of stress increase in bottom flange due to LT buckling can be neglected, as its influence in general resistance checks will be negligible.

2. Stage 2

The same assumptions, as in stage 1, remain valid.

3. Stage 3

Cross-sectional characteristics for mid-span regions do not differ from this calculated for stage 1 and 2 analysis. For support zone regions lower concrete chord of variable height should be additionally taken to analysis as presented in Fig. 4.8. Local instability of the web by normal stresses should not be a problem anymore, because neutral axis shifts toward compressed flange significantly.

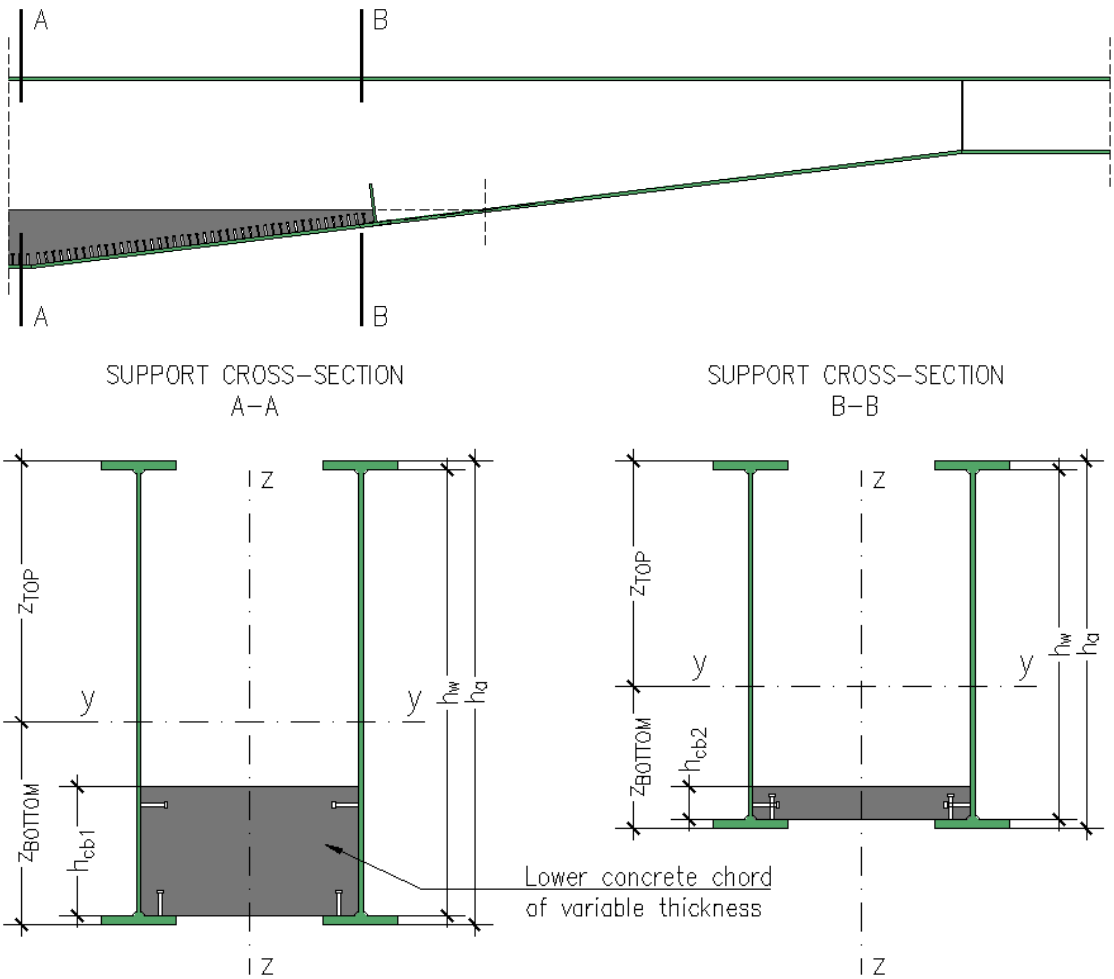

Fig. 4.7 Cross-sectional geometry for stage 3 analysis

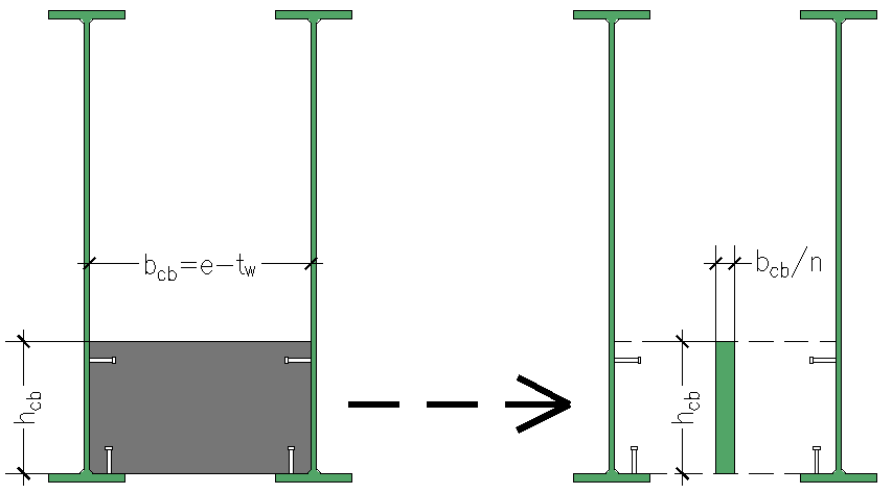

Fig. 4.8 Cross-sectional geometry for stage 3 analysis – steel equivalent section

For calculations of geometric parameters concrete should be substituted with steel equivalent section by means of appropriate modulus ratio as below:

$$n = \frac{E_a}{E_{c,FEA}} \quad ,$$

where $E_{c,FEA}$ is defined in chapter 4.2. Stresses in steel and concrete are calculated in the following manner:

- for support cross-section:

$$\sigma_{TOP} = \frac{M \cdot z_{TOP}}{I_y}$$

$$\sigma_{BOTTOM} = \frac{M \cdot z_{BOTTOM}}{I_y}$$

$$\sigma_{c,BOTTOM} = \frac{M \cdot \left(z_{BOTTOM} - t_f\right)}{I_y \cdot n}$$

- for mid-span cross-section:

$$\sigma_{TOP} = \frac{M \cdot z_{TOP}}{I_y \cdot \chi_{LT}}$$

$$\sigma_{BOTTOM} = \frac{M \cdot z_{BOTTOM}}{I_y}$$

4. Stage 4 and 5

All cross-sections from step 3 are strengthened with concrete deck and act as a steel - concrete composite sections, as presented in Fig. 4.9 and Fig. 4.10.

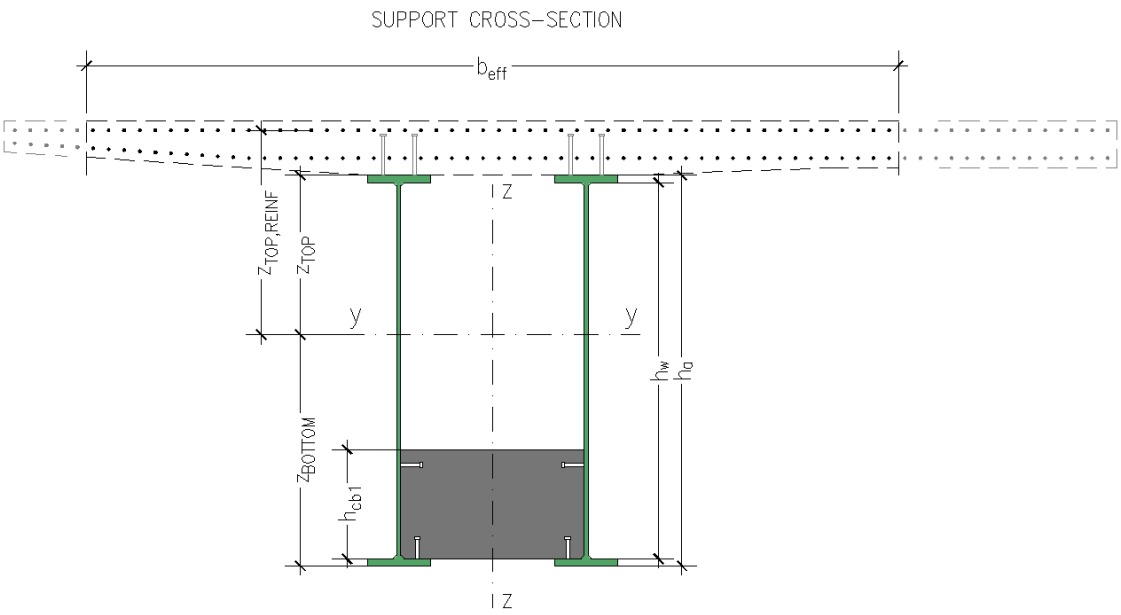

Fig. 4.9 Cross-sectional geometry of support zone for stage 4 and 5 analysis

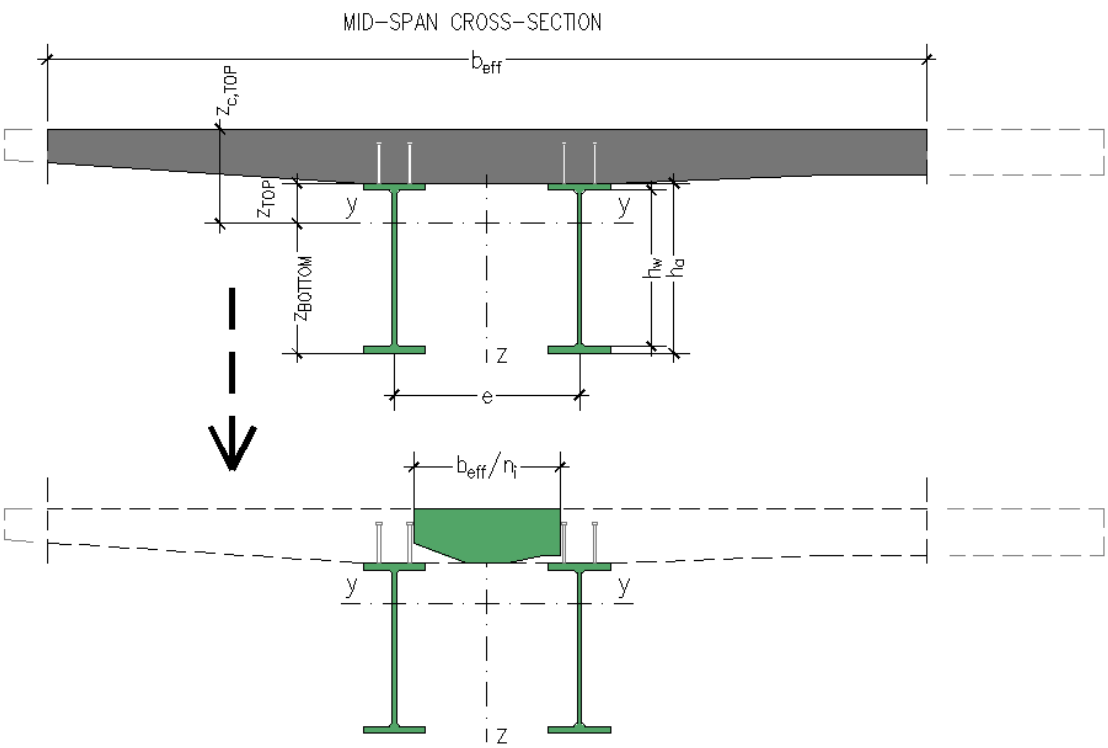

Fig. 4.10 Cross-sectional geometry of mid-span zone for stage 4 and 5 analysis

For calculations of geometric parameters concrete in lower chord should be substituted with steel equivalent section as described in point 3 (stage 3). Concrete deck should also be substituted by steel equivalent sections by means of appropriate modulus ratio as below:

$$n_i = \frac{E_a}{E_{c,i}} \quad ,$$

where $E_{c,i}$ is concrete modulus of elasticity:

$$E_{c,i} = \begin{cases} E_{cm} & (1) \\ \dfrac{E_{cm}}{1+\psi_L \cdot \varphi} & (2) \end{cases}$$

For stress calculation caused by short-term actions equation (1) should be used, for other actions equation (2) is appropriate, with coefficients ψ_L and φ according to [11]. Stress values:

- for support cross-section:

$$\sigma_{TOP} = \frac{M \cdot z_{TOP}}{I_y}$$

$$\sigma_{BOTTOM} = \frac{M \cdot z_{BOTTOM}}{I_y}$$

$$\sigma_{c,BOTTOM} = \frac{M \cdot \left(z_{BOTTOM} - t_f\right)}{I_y \cdot n}$$

$$\sigma_{TOP,REINF} = \frac{M \cdot z_{TOP,REINF}}{I_y}$$

- for mid-span cross-section:

$$\sigma_{TOP} = \frac{M \cdot z_{TOP}}{I_y}$$

$$\sigma_{BOTTOM} = \frac{M \cdot z_{BOTTOM}}{I_y}$$

$$\sigma_{c,TOP} = \frac{M \cdot z_{c,TOP}}{I_y \cdot n_i}$$

Resistance of critical cross-sections in ULS should be checked by summing stresses caused in all stages and comparing them to appropriate material strength, as following:

- for support cross-section:

$$\sigma_{TOP} = \sum_{i=1}^{n=5} \sigma_{TOP,i} \leq f_y$$

$$\sigma_{BOTTOM} = \sum_{i=1}^{n=5} \sigma_{BOTTOM,i} \leq f_y$$

$$\sigma_{c,BOTTOM} = \sum_{i=3}^{n=5} \sigma_{c,BOTTOM,i} \leq 0{,}85 \cdot f_{cd}$$

$$\sigma_{TOP,REINF} = \sum_{i=4}^{n=5} \sigma_{TOP,REINF,i} \leq f_{sd}$$

- for mid-span cross-section:

$$\sigma_{TOP} = \sum_{i=1}^{n=5} \sigma_{TOP,i} \leq f_y$$

$$\sigma_{BOTTOM} = \sum_{i=1}^{n=5} \sigma_{BOTTOM,i} \leq f_y$$

$$\sigma_{c,TOP} = \sum_{i=4}^{n=5} \sigma_{c,TOP,i} \leq f_{cd}$$

Additionally, shear resistance should be checked, taking into account the resistance of the steel web alone, neglecting possible contribution of concrete parts in taking vertical shear. This way a maximum shear force is sum of shear forces obtained from stages 1 to 5. Resistance to shear should be determined according to [8], if local instability can appear (concerns support zone regions) – case 1, and according to [9], if elastic resistance without instability problems is a case (mid-span regions) – case 2.

$$V_{Ed} = \sum_{i=1}^{n=5} V_{Ed,i}$$

$$\frac{V_{Ed}}{V_{bw,Rd}} < 1{,}0 \qquad \text{- case 1 (description in text above)}$$

$$\tau_{Ed} = \frac{V_{Ed} \cdot S}{I_y \cdot t_w} < \frac{f_y}{\gamma_{M0} \cdot \sqrt{3}} \qquad \text{- case 2 (description in text above)}$$

As hot-rolled sections are used, there is usually no problem with resistance to vertical shear, and safety margin exceeds 50 %. This is why interaction between bending moment and shear force do not need to be considered. However, if utilization ratio is greater than 50 %, this interaction should be considered according to appropriate parts of EC3.

For SLS dimensioning crack width in support zone regions should be limited. Stresses in rebar are to be calculated the same way as for ULS checks, but on basis of appropriate SLS load combinations. Effect of tension stiffening should be taken into account according to [11].

$$\sigma_{TOP,REINF,SLS} = \sigma_{TOP,0,REINF,SLS} + \Delta\sigma_A$$

Because concrete deck cooperates with steel superstructure only in stage 4 and 5, there is usually no problem with limiting crack width to 0,2 mm.

4.4 Shear connection dimensioning

It is recommended to check shear connection for elastic longitudinal shearing force, as well as for full shear connection to guarantee the possibility of plastic failure of the bridge.

- Elastic longitudinal shearing force:

  For all critical cross sections elastic force of longitudinal shearing should be calculated as:

$$V_L = V_{Ed} \cdot \frac{\overline{S}}{I_y} \quad ,$$

  where:

$$V_{Ed} = \sum_{i}^{n} V_{Ed,i} \quad ,$$

  with i and n stating for number of stages, in which composite action is present. For example, for presented technology of realization, in calculating shear connection between steel superstructure and concrete deck i = 4 and n = 5, but for similar calculations for connection between lower concrete chord and steel superstructure i = 3 and n = 5.

  Because in intermediate support zone regions height of cross section is variable then also S / I_y factor varies. Preliminary calculation shows that critical cross section for elastic calculations is just at the start point of the haunches. Vertical shear force is then smaller that at the support, but S / I_y factor has the highest value. However all critical cross sections should be checked, at least:

  - start point of the haunch,
  - start point of the lower concrete chord,
  - points at supports.

- Full composite action force for concrete deck:

  For full composition of the deck 2 situations occurs. One of them is increase of compression stresses in the deck concrete in mid-span regions, second one is increase of tensile stresses in the deck rebar in intermediate support regions. Both of above should

be considered, assuming that length of sagging bending moments is approximately 0,5 L, and length of hogging bending moments is approximately 0,25 L.

$$V_{L,MID-SPAN} = \frac{A_{cc} \cdot 0{,}85 \cdot f_{cd}}{0{,}25 \cdot L} \quad ,$$

$$V_{L,SUPPORT} = \frac{A_{sf} \cdot f_{sd}}{0{,}25 \cdot L} \quad ,$$

where A_{cc} states for area of compressed concrete within the effective width of concrete deck, and A_{sf} states for area of tensile rebar within abovementioned.

- Full composite action force for lower concrete chord:

  For full composition of the lower concrete chord one should assume that length of stress increase in concrete chord is equal to its length. Then one obtains:

$$V_{L,CC} = \frac{A_{cc-cc} \cdot 0{,}85 \cdot f_{cd}}{L_{CC}} \quad ,$$

where $A_{cc\text{-}cc}$ states for area of compressed concrete chord at support line, and L_{cc} states for length of the chord.

For studs dimensioning it is recommended to take bigger longitudinal shearing force from those obtained from elastic analysis and full composition assumption. This way both full shear connection assumption and fulfilment of all structural requirements are obtained. Smaller number of studs, even if sufficient from static point of view to take longitudinal shearing in elastic analysis, is not recommended.

5 WP 1.3 CASE STUDY

As a design example 3-span road bridge is considered with span lengths of 38 + 50 + 38 m. Static system of a bridge is a continuous beam. In validation report cross-checked calculations will be shown and short static calculations will be performed with static system changed to frame. Longitudinal section of a bridge is shown in Draw. No. 1 attached to the documentation, while cross-section is presented in Fig. 5.1.

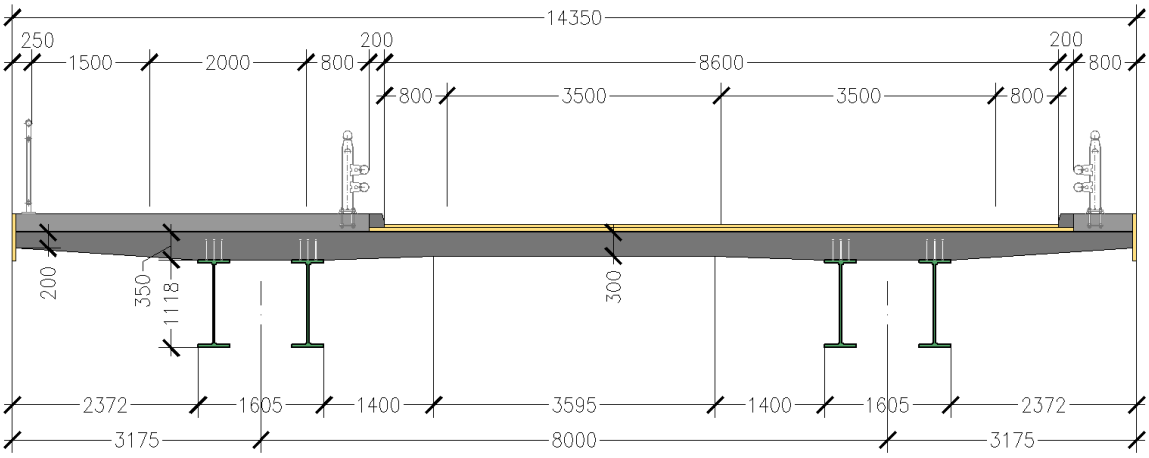

Fig. 5.1 Cross-section of an exemplary bridge

Assumptions made in design example:

- materials:
  - concrete deck made out of C30/37,
  - reinforcement – BSt500S (EPSTAL),
  - structural steel – S460 + S355 (welded plates in a support zone),
- bridge geometry and surface layers:
  - thickness of a deck – variable from 0,20 to 0,35 m (as in Fig. 5.1),
  - steel girders – HL1100R in transversal spacing of 1,20 m,
  - waterproof insulation – 0,01 m,
  - pavements – 0,23 m,
  - asphalt surface – 0,09 m,
  - cornice boards out of polymer concrete – 0,05 x 0,60 m,
- geometry of traffic lines:
  - 2-line express road 2x 3,50 m + 2x 0,80 = 8,60 m,
  - pedestrian sidewalk and cycling path – 1,50 + 2,00 = 3,50 m,

- technology of realization (shown also in Draw. No. 1):
  - stage 1 – assembling a steel superstructure using temporary supports,
  - stage 2 – casting a concrete strengthening a lower flange of steel girders in support zone regions,
  - stage 3 – casting a concrete slab,
  - stage 4 – erection of surface layers and installation of equipment,
  - stage 5 – exploitation of the bridge.

Static calculations and dimensioning are based on Eurocodes, especially on [2] – [11].

5.1 Actions on structure

Types of loads are defined according to Eurocode for ULS and SLS superposition:

Actions

type	part	sup	Title	γ-u	γ-f	γ-a	ψ-0	ψ-1	ψ-2
X		excl	singl load cases	1.00	0.00	1.00	1.00	1.00	1.00
G	G	perm	dead load	1.35	1.00	1.00	1.00	1.00	1.00
G_1	G	perm	gk	1.35	1.00	1.00	1.00	1.00	1.00
G_2	G	perm	gn	1.35	1.00	1.00	1.00	1.00	1.00
G_3	G	perm	soil horisontal	1.50	1.00	1.00	1.00	1.00	1.00
C	P	perm	C+S	1.35	1.00	1.00	1.00	1.00	1.00
C_1	P	perm	C+S	1.35	1.00	1.00	1.00	1.00	1.00
C_2	P	perm	C+S	1.35	0.00	1.00	1.00	1.00	1.00
F	Q	cond	settlements	1.20	0.00	1.00	1.00	1.00	1.00
F_1	Q	cond	settlements	1.20	0.00	1.00	1.00	1.00	1.00
L	Q	excl	live loading	1.50	0.00	1.00	0.75	0.75	0.20
L_1	Q	excl	TS from LM1 EN	1.50	0.00	1.00	0.75	0.75	0.20
Q	Q	cond	gr1a EN	1.50	0.00	1.00	0.75	0.75	0.20
Q_1	Q	cond	gr1a vertical EN	1.50	0.00	1.00	0.75	0.75	0.20
Q_2	Q	cond	B+A EN	1.50	0.00	1.00	0.75	0.75	0.20
Q_3	Q	cond	horis perp EN	1.50	0.00	1.00	0.75	0.75	0.20
T	Q	excl	temp	1.50	0.00	1.00	0.60	0.60	0.50
T_1	Q	excl	temp	1.50	0.00	1.00	0.60	0.60	0.50

Load types X, G_3, Q_2, Q_3 are not used in the calculations.

Actions are divided into groups imposed to superstructure in every particular construction stage.

- Stage 1 and 2 – steel superstructure alone is carrying all loads
  - Dead weight of steel structure (type G_1),

    Calculated automatically in FEM software on basis of cross-section area and density of steel 78,5 kN/m^3.

  - Dead weight of formworks (type G_1),

Uniformly distributed load with value of 0,5 kPa is assumed to cover effects of formworks and temporary bracings against lateral – torsional buckling of steel girders. This load will be applied also in stage 4, but with opposite direction (as a disassembly of formworks and bracings after casted concrete is hardened). It is assumed that formworks for entire slab may be made before lower flanges of girders are strengthened with concrete. A width of bridge is 14,35 m, thus load imposed to single girder is:

$g_{k1} = 0{,}25 \cdot 14{,}35 \cdot 0{,}5 = 1{,}79\,\text{kN/m}$ per single beam in tandem

In region, where lower flange is strengthened with concrete additional load from formworks is taken into account:

$g_{k2} = 0{,}5 \cdot 1{,}605 \cdot 0{,}5 = 0{,}40\,\text{kN/m}$ per single beam in tandem

- Dead weight of concrete casted as a strengthening a lower flange of steel girders in support zone regions (type G_1),

  Concrete is to be casted on length 0,125 L_2 from support (L_2 = middle span length), its thickness is various from almost zero (automatic algorithm calculate particular interpolated value) at beginning of haunch to 0,70 m at support line. Width is 1,174 m (axial spacing of girders in one tandem is 1,20 m). Value 0,70 m comes from assumption, that concrete starts form point located in 0,25 / 2 = 0,125 L_2 from support (L_2 = span length of middle span) and the way that automatic algorithm handles it in the software. The difference of 0,1 m (comparing to initially assumed dimension in the drawing) is not so important in stiffness of section concerning location of additional thickness relatively close to neutral axis and it is on safe side considering load effect only.

- Stage 3 – steel superstructure strengthened in support zone with lower concrete chord is carrying all loads

  - Dead weight of concrete slab (type G_1),

    It is assumed that weight of wet concrete is uniformly imposed to all girders:

    $g_{k5} = 0{,}25 \cdot 4{,}389 \cdot 26 = 28{,}53\,\text{kN/m}$ (wet concrete) per single beam in tandem

    This load is divided in two parts: dry concrete with density 25 kN/m^3 including reinforcement (zero weight of reinforcing steel in section) and additional load calculated with 1 kN/m^3 multiplied by field of concrete section (for taking into account weight of wet concrete during its casting).

- Stage 4 – steel – concrete composite structure is carrying all loads. All these loads can cause creeping of compressed concrete

  - Removal of formworks (type G_1),

    At this stage concrete lower chords and upper slab are already hardened and formworks (g_{k1} and g_{k2}) are to be removed. Additional load calculated due to wet concrete with 1 kN/m^3 multiplied by field of concrete section is removed at this stage.

  - Dead weight of concrete pavement (type G_2),

    $g_{k8} = 0{,}23 \cdot 25 = 5{,}75\,\text{kPa}$ (width of load surface: 4,70 m + 0,95 m)

  - Dead weight of asphalt surface (including ±20 % of its height variation) (type G_2),

    $g_{k9} = 1{,}2 \cdot 0{,}09 \cdot 23 = 2{,}48\,\text{kPa}$ (width of load surface: 8,60 m)

  - Dead weight of waterproof insulation (double value to be added to pavement areas and single value to be added to asphalt area) (type G_2)

    $g_{k10} = 0{,}01 \cdot 14 = 0{,}14\,\text{kPa}$

  - Dead weight of cornice boards out of polymer concrete (type G_2),

    $g_{k11} = 0{,}05 \cdot 0{,}60 \cdot 24 = 0{,}72\,\text{kN/m}$ (per single cornice)

  - Dead weight of railings, barriers (type G_2),

    $g_{k12} = 0{,}50\,\text{kN/m}$ (per single railing)

    It is assumed 2 cornices and 4 barriers / railings in the model, what results in total force:

    $$g_{k11\text{–}12} = 2 \cdot 0{,}72 + 4 \cdot 0{,}50 = 3{,}44\,\text{kN/m}$$

    This load is modelised as 4 line loads (2 at the bridge edges and 2 at the lane edges) with average value of 3,44 / 4 = 0,86 kN/m.

Partial creep and shrinkage is considered in the model with humidity 80 % and average temperature of concrete aging 8 °C. This is calculated automatically by the software according to EN 1992-1-1 procedure as type C_1.

- Stage 5 – steel – concrete composite structure is carrying all loads

Partial creep and shrinkage is considered in the model with humidity 80% and average temperature of concrete aging 8 deg. This calculated automatically by the software according to EN 1992-1-1 procedure as type C_2.

All the loads presented above are handled by CSM (construction stage manager) module using appropriate section stages and element groups.

- Variable traffic loads

  Number of traffic lanes if distance between kerbs is 8,60 m:

  $$n = \mathrm{Int}\left(\frac{w}{3}\right) = \mathrm{Int}\left(\frac{8{,}60}{3} = 2{,}87\right) = 2$$

  Width of traffic lane is 3,00 m. Width of the remaining area:

  $$w - 3 \cdot n = 8{,}60 - 3 \cdot 2 = 2{,}60\,\mathrm{m}$$

  Load model 1, 2 and 4 according to EN 1991-2 is considered. For global analysis LM 1 is taken into account. Other load models (LM2) and effects will be considered at validation report stage.

  LM 1: tandem loads (TS) and uniformly distributed load (UDL)

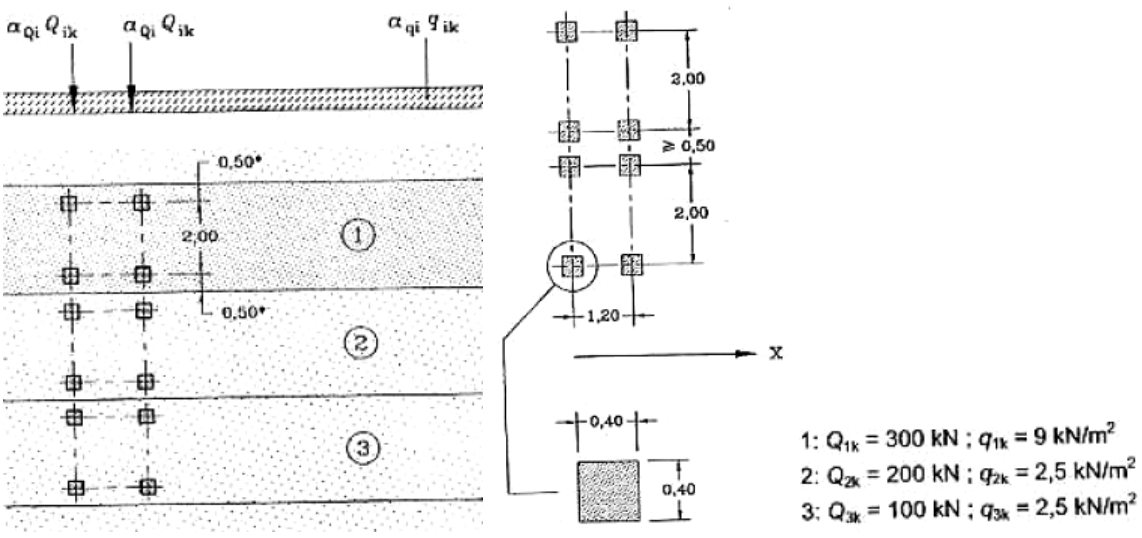

Fig. 5.2 From left: LM 1, modified LM 1 for local checks, values of Q and q loads

- Thermal effects

  Uniform changes in temperature +31 °C / 30 °C are taken into account. Unequal thermal effects on steel structure and concrete deck are also considered: 18 °C (bottom part warmer) / 15 °C (upper part warmer). These basic cases are combined using ω factors according to EN 1991-1-5 procedure.

- Settlements

  10 mm of vertical displacement is used for each support.

5.2 FE model

5.2.1 Basic assumptions for FE model

Sofistik software is used for calculations. The model comprises abutments and pillars because it is prepared for future applications of frame system. Abutments and pillars were modelised with realistic stiffness of bedding and pile support. Currently for purposes of system using continuous beams abutments and pillars (however included in the model) can be excluded from considerations. Their stiffness is high enough to not influence internal forces in the superstructure and their creep and shrinkage (C+S) effects have been switched off in the model implementing appropriate C+S parameters close to zero.

Two beams of tandem are modelised with single beam element with the same bending inertia I_y (width of steel parts of single HL1100R is multiplied by 2 for beam section standing for tandem) and torsional moment I_T being sum of two single I-shapes. This way torsional stiffness of each tandem excludes the effect of I_ω. Such an approach is clear and robust and it will be checked by more complicated model at the validation report stage.

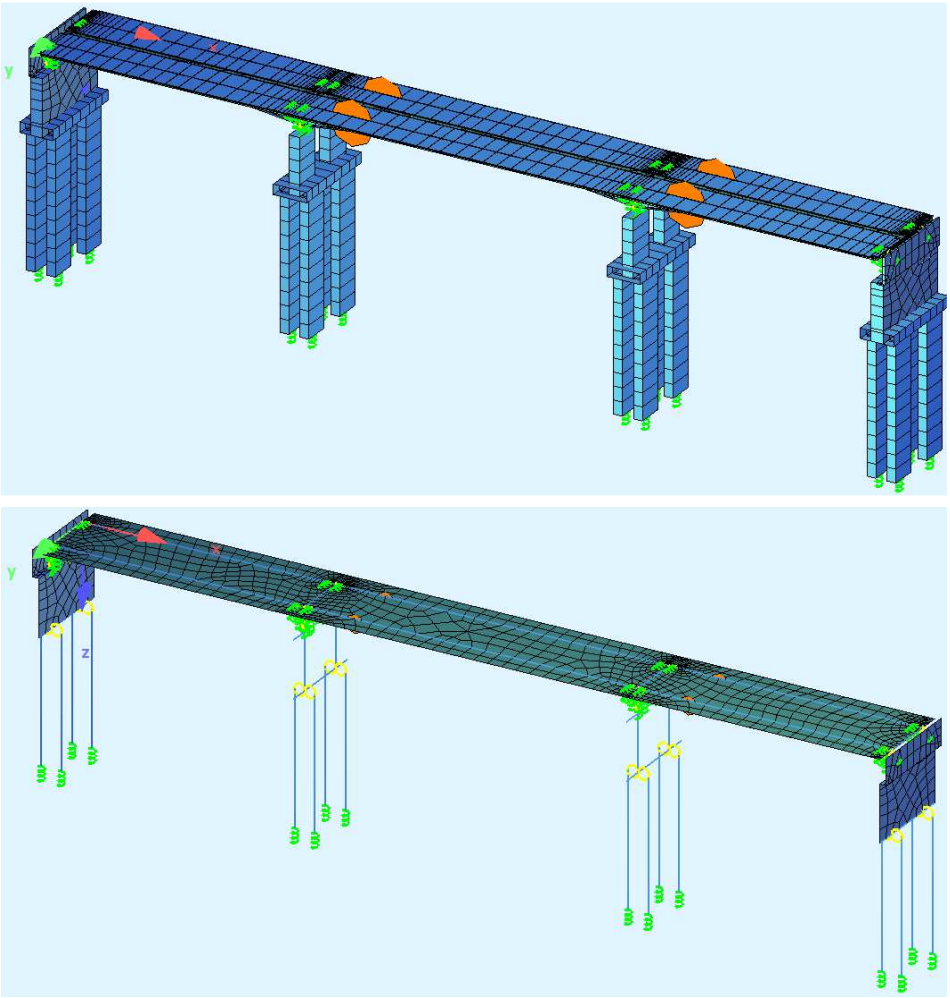

Fig. 5.3 FE model visualization

Next to main girders out of 2 HL1100R (variable height) support crossbeams are modelised out of HL1100R. They are shift to concrete slab but their action in the model is of secondary importance (they ensure stability for steel structure phase). Steel part of model is visualized below:

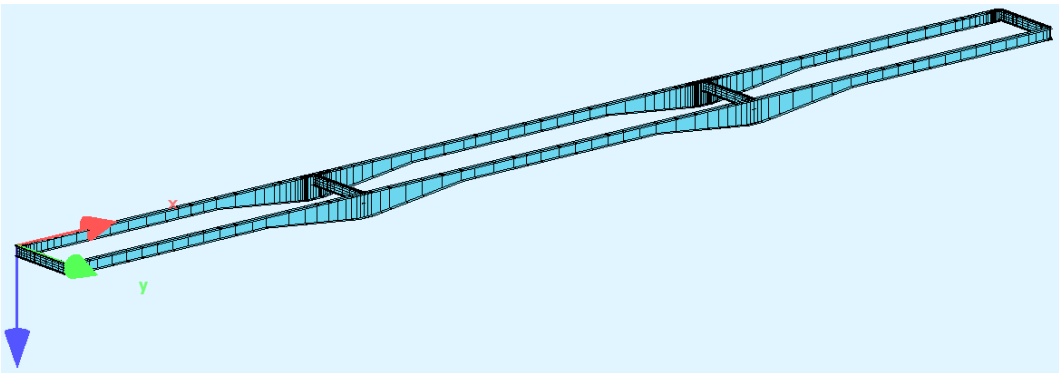

Fig. 5.4 FE model visualization of steel superstructure

Elements are grouped to be switched on / off in CSM module:

Groups of elements:

11	elements standing for foundation piles
12	elements standing for foundation piles
13	elements standing for foundation piles
14	elements standing for foundation piles
21	horisontal beam fixing cap of piles
22	horisontal beam fixing cap of piles
23	horisontal beam fixing cap of piles
24	horisontal beam fixing cap of piles
31	abutment vertical elements
32	pillar vertical elements
33	pillar vertical elements
34	abutment vertical elements
41	crossbeams
42	crossbeams
43	crossbeams
44	crossbeams
51	main beams, field part
52	main beams, field part
53	main beams, field part
61	main beams, part over support at length 1.8m
62	main beams, part over support at length 1.8m
63	main beams, part over support at length 1.8m
64	main beams, part over support at length 1.8m
71	spring elemnts connectiong superstructure to supports
72	spring elemnts connectiong superstructure to supports
73	spring elemnts connectiong superstructure to supports
74	spring elemnts connectiong superstructure to supports
81	shell elements of insitu slab
82	shell elements of insitu slab
83	shell elements of insitu slab
111	vertical springs uder bottom of piles
112	vertical springs uder bottom of piles
113	vertical springs uder bottom of piles
114	vertical springs uder bottom of piles
151	main beams, support part
152	main beams, support part
153	main beams, support part

Groups are presented in the drawings:

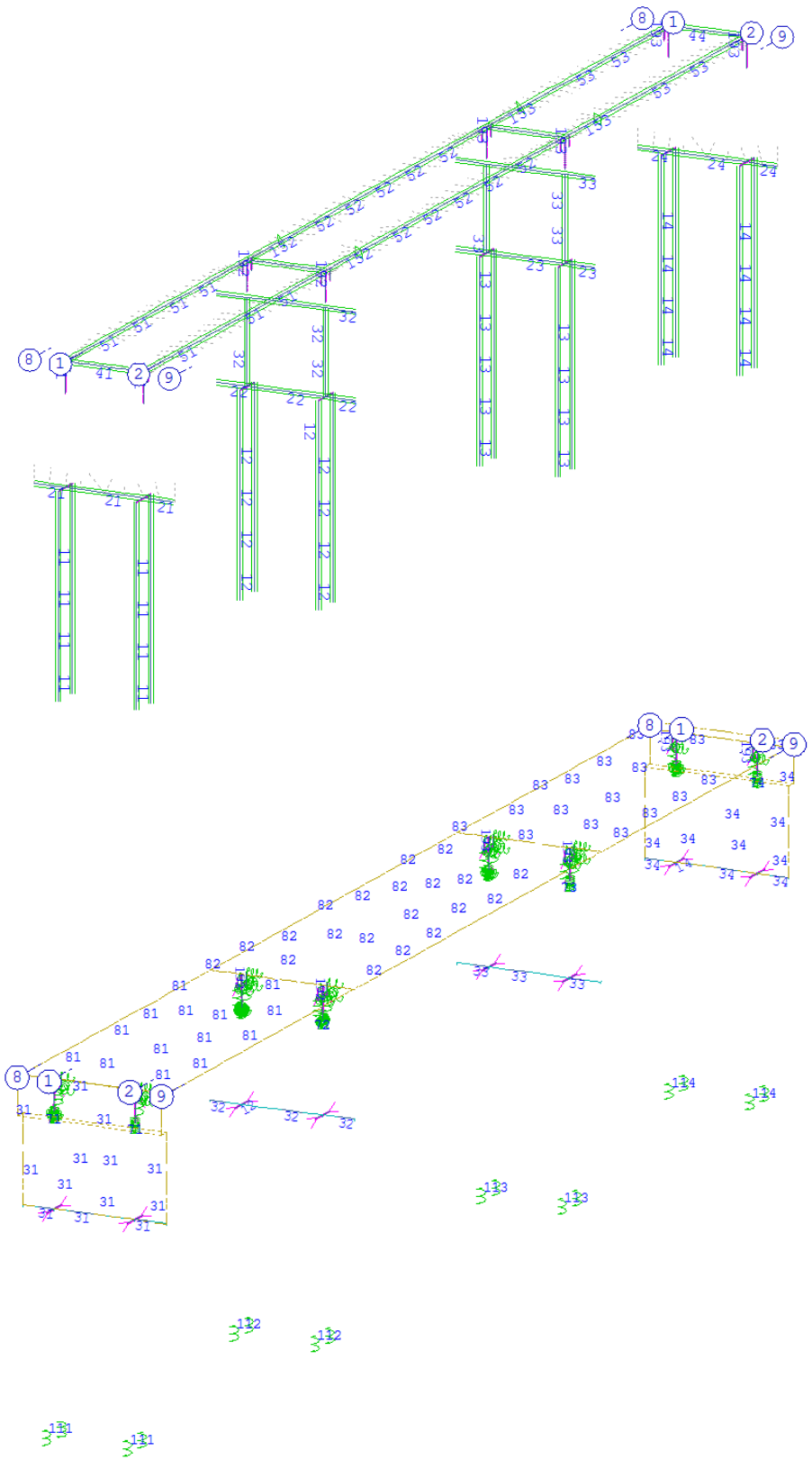

Fig. 5.5 Numbers of groups of elements in FEM

Springs of group 191, 192, 193 and 194 are not used in calculation (they are implemented to enable different technology of realization of steel structure in the future).

The superstructure was modelised according to approach presented in [13]:

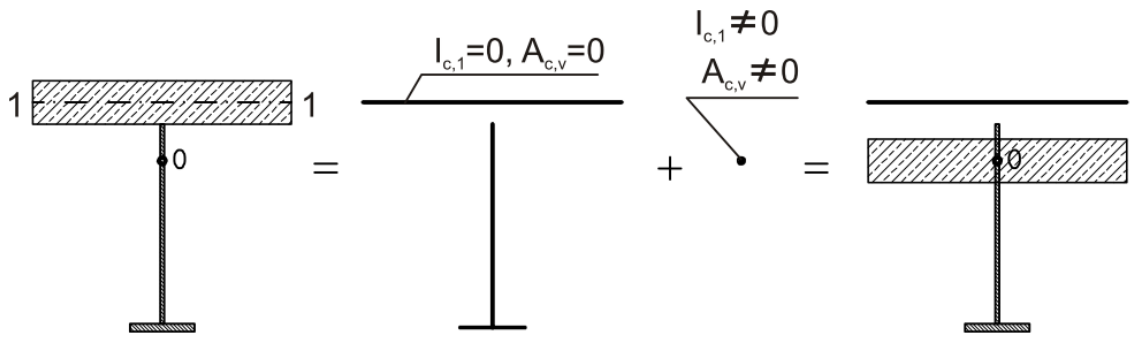

Fig. 5.6 Cross-section projection in FEM

Composite section is modelised with thin plats including effect of effective width. Concrete slab is modelised with shell elements excluding membrane stiffness in longitudinal direction. Thickness of shell elements is assumed 0,30m for entire system. Due to this approach total forces and stresses in composite sections can be handled efficient way and effect of offset is out of importance for longitudinal direction.

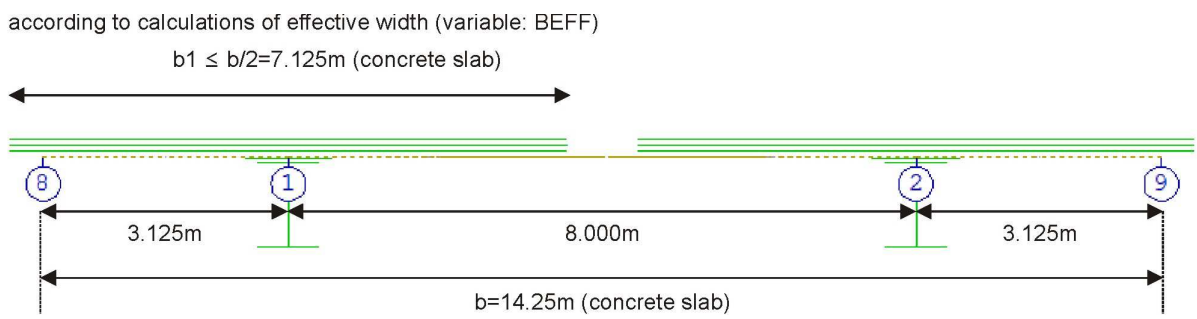

Fig. 5.7 Effective width of concrete slab: cross - section

Effective width is calculated according to EN 1994 and for this particular system it is confirmed to be very close to total width possible per single tandem. Reinforcement in section is considered for effective width only.

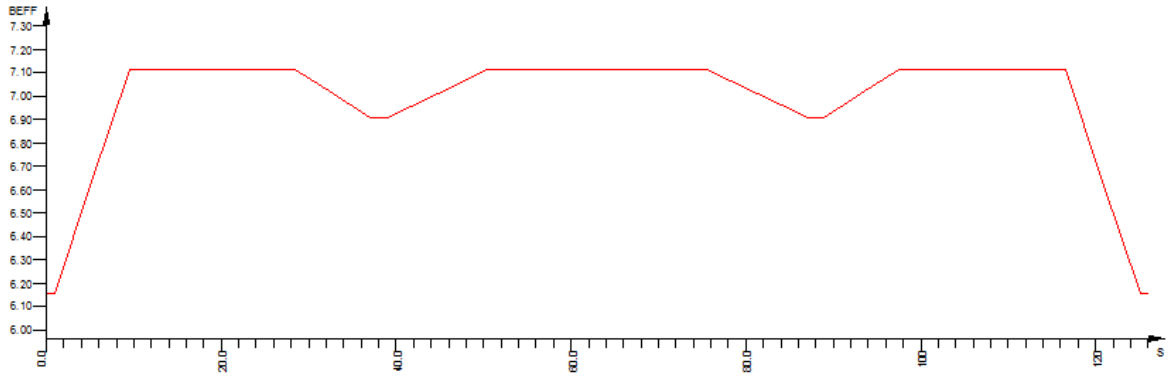

Fig. 5.8 Effective width of concrete slab: variation in bridge length

Total height of composite section (from the bottom of lower steel flange to upper part of concrete slab) changes according to variable HTH with HTH = ”height of steel section” + 0,35 m “concrete part”. Steel section height varies from 1,118m to 2,500 m.

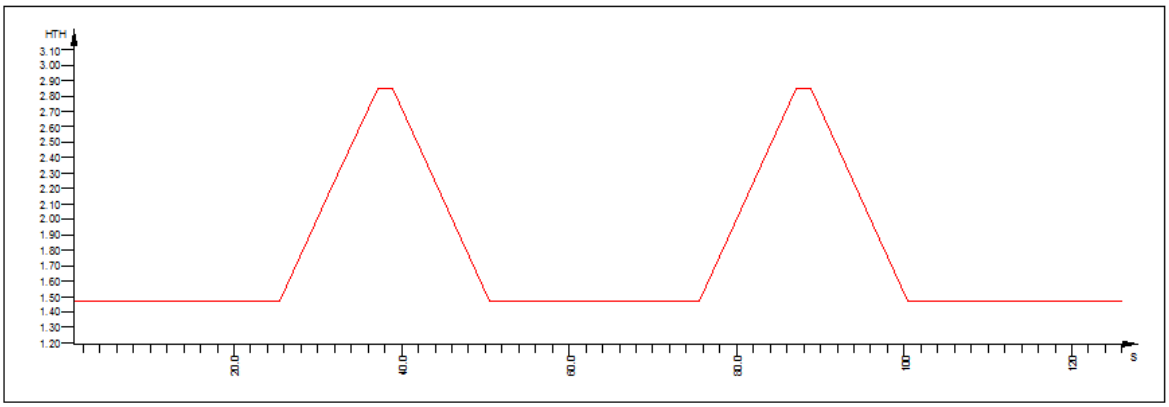

HTH

S[-]	V[-]	DV[-]	TYP
0.900	1.468	0.000	POLY
9.500	1.468	0.000	POLY
25.500	1.468	0.119	POLY
37.100	2.850	0.000	POLY
38.900	2.850	-0.119	POLY
50.500	1.468	0.000	POLY
75.500	1.468	0.119	POLY
87.100	2.850	0.000	POLY
88.900	2.850	-0.119	POLY
100.500	1.468	0.000	POLY
116.500	1.468	0.000	POLY
125.100	1.468	0.000	POLY

Fig. 5.9 Variation of cross – sectional height

Concrete next to bottom steel flange at the pillars is modelised at 0,125 L_2 and cracked sections are used for 0,15 L_2 with L_2 standing for middle span (L_2 = 50 m). Section in field comprises of steel part and reinforced concrete part. Concrete part comprises of two parts with total height 0,35m. Concrete of slab is modelised as C30/37 with default C+S parameters according to EN 1992. Cracked concrete is used with modulus of elasticity equal to zero. Bottom concrete next to compressed steel flange is used with modulus of elasticity equal to E / 3

= 32800 / 3 MPa but without considering C+S effects. Appropriate stages of composite section are considered.

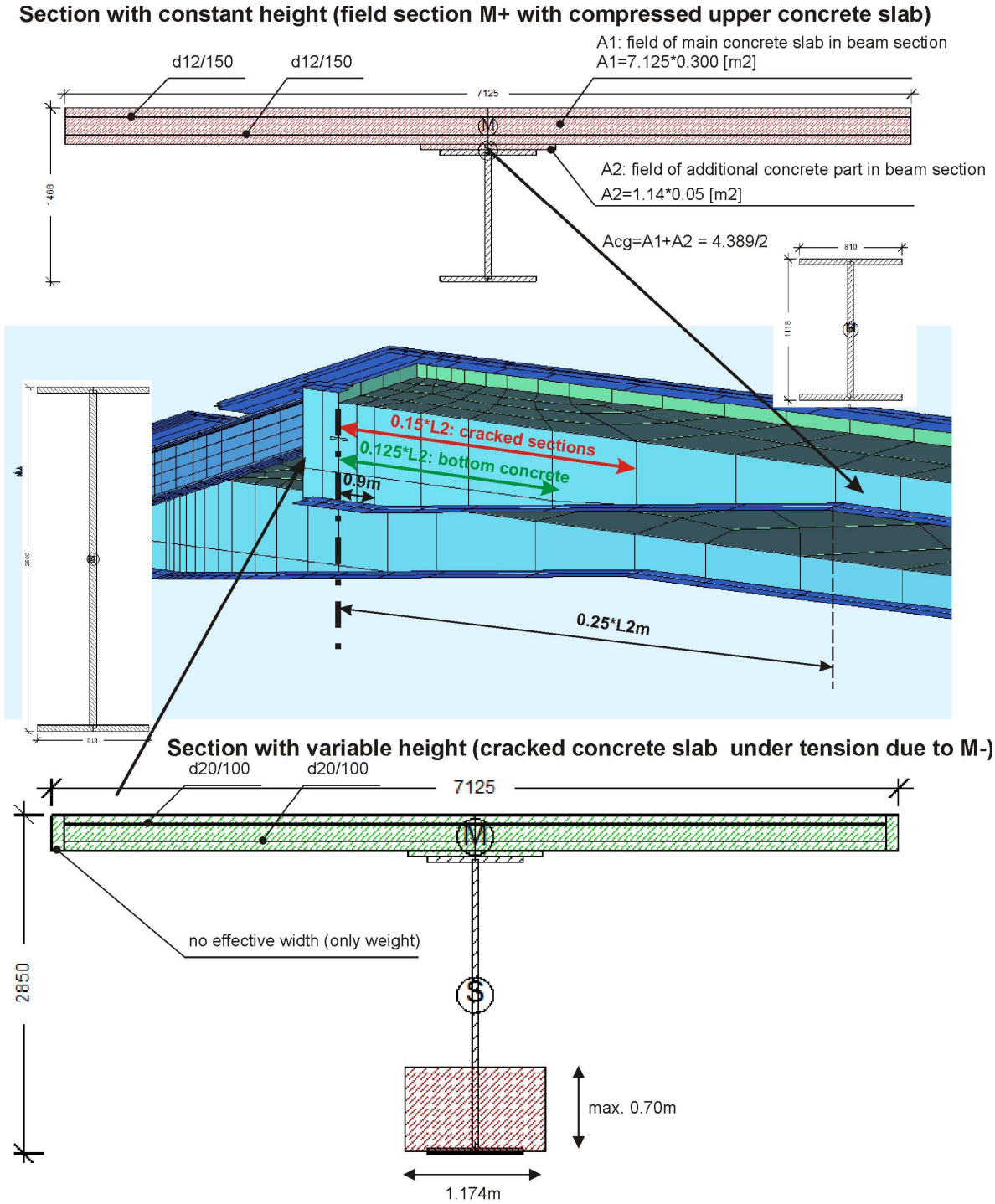

Fig. 5.10 FEM: cross – sectional geometry

Sections with variable construction height are built automatically using two basic types of sections numbered x51 (cracked) and x53 (uncracked). For example 157-(151) means, that sectin 157 is uncracked section done by modification of section 151 (uncracked).

Stresses are calculated in stress points:

C3U: upper surface of concrete slab
R3U: upper reinforcement of concrete slab
PASG: upper flange of steel beam
PASD: lower flange of steel beam
BETD: lower surface of bottom concrete

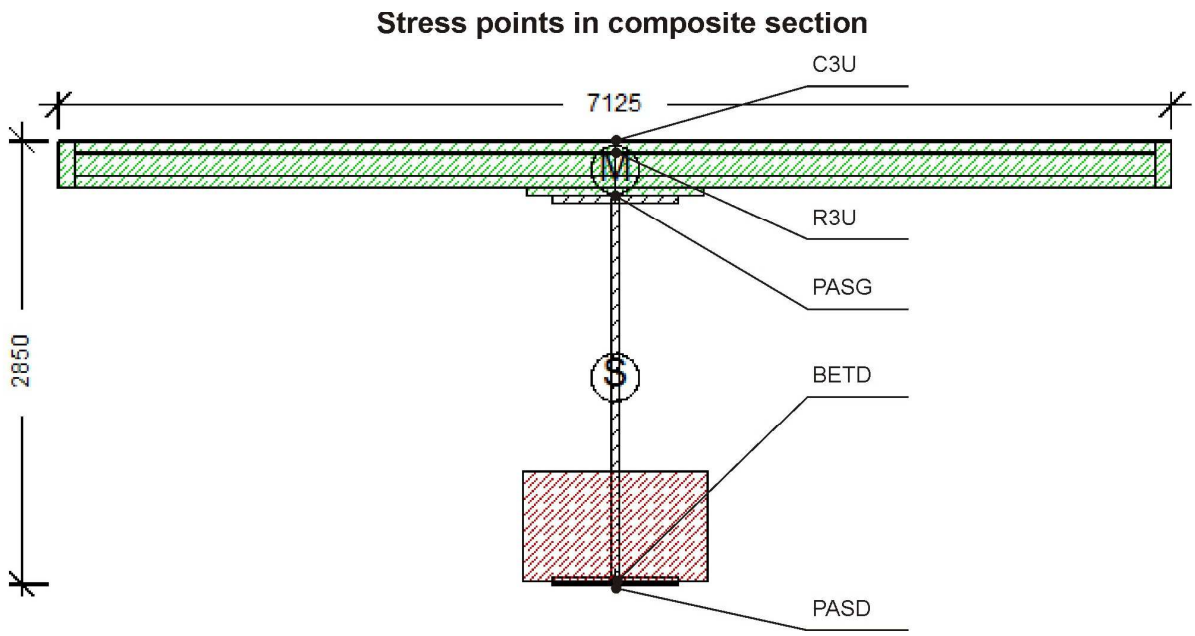

Fig. 5.11 FEM: cross – sectional stress points

5.2.2 Materials used in the model

No. 1 S 355 T (EN 1993) S355

Youngs-modulus	E	210000	[MPa]	Safetyfactor		1.15	[-]
Poisson-Ratio	mu	0.30	[-]	Yield stress	fy	335.00	[MPa]
Shear-modulus	G	80769	[MPa]	Compr.yield val.	fyc	335.00	[MPa]
Compression modulus		175000	[MPa]	Tens. strength	ft	470.00	[MPa]
Weight		78.5	[kN/m3]	Compr. strength	fc	470.00	[MPa]
Density	rho	7850	[kg/m3]	Ultim. plast. strain		22.00	[o/oo]
Temp.elongat.coeff.		1.20E-05	[1/°K]	relative bond coeff.		0.00	[-]
max. thickness		80.00	[mm]	EC2 bondcoeff. K1		0.00	[-]
				Hardening modulus		0.00	[MPa]
				Proportional limit		335.00	[MPa]
				Dynamic stress range		0.00	[MPa]

Mat. No. 1 is used for steel HL1100R shapes in the bridge, however named S355 it is valid for steel S460 too, because it is elastic design.

```
No. 25 C 30/37 (EN 1992) C2:bottom conc
-------------------------------------------------------------------------------
Youngs-modulus    E        10667 [MPa]      Safetyfactor                1.50 [-]
Poisson-Ratio     mu        0.20 [-]        Strength          fc       30.00 [MPa]
Shear-modulus     G         4444 [MPa]      Nomin. strength   fck      30.00 [MPa]
Compression modulus         5926 [MPa]      Tens. strength    fctm      2.90 [MPa]
Weight                      25.0 [kN/m3]     5 % t.strength   fctk      2.03 [MPa]
Density           rho       2350 [kg/m3]    95 % t.strength   fctk      3.77 [MPa]
Temp.elongat.coeff.    1.00E-05 [1/°K]     Bond strength     fbd       3.04 [MPa]
                                           Service strength           38.00 [MPa]
                                           Fatigue strength           17.60 [MPa]
                                           Ten.strngth fctd            1.35 [MPa]
```

Mat. No. 25 is used for bottom concrete, it assumes E / 3 according to new approach proposed for design of compressed concrete block next to bottom flange. Its C+S effects are excluded.

```
No. 30 C 30/37 (EN 1992) C3:insitu slab
-------------------------------------------------------------------------------
Youngs-modulus    E        32837 [MPa]      Safetyfactor                1.50 [-]
Poisson-Ratio     mu        0.20 [-]        Strength          fc       30.00 [MPa]
Shear-modulus     G        13682 [MPa]      Nomin. strength   fck      30.00 [MPa]
Compression modulus        18243 [MPa]      Tens. strength    fctm      2.90 [MPa]
Weight                      25.0 [kN/m3]     5 % t.strength   fctk      2.03 [MPa]
Density           rho       2350 [kg/m3]    95 % t.strength   fctk      3.77 [MPa]
Temp.elongat.coeff.    1.00E-05 [1/°K]     Bond strength     fbd       3.04 [MPa]
                                           Service strength           38.00 [MPa]
                                           Fatigue strength           17.60 [MPa]
                                           Ten.strngth fctd            1.35 [MPa]
```

Mat. No. 30 stands for effective width of uncracked concrete slab. It is main factor of C+S effects in the structure.

```
No.210 B 500 B (EN 1992) R2:Bst500
-------------------------------------------------------------------------------
Youngs-modulus    E       200000 [MPa]      Safetyfactor                1.15 [-]
Poisson-Ratio     mu        0.30 [-]        Yield stress      fy      500.00 [MPa]
Shear-modulus     G        76923 [MPa]      Compr.yield val.  fyc     500.00 [MPa]
Compression modulus       166667 [MPa]      Tens. strength    ft      550.00 [MPa]
Weight                       0.0 [kN/m3]    Compr. strength   fc      550.00 [MPa]
Density           rho          0 [kg/m3]    Ultim. plast. strain       50.00 [o/oo]
Temp.elongat.coeff.    1.20E-05 [1/°K]     relative bond coeff.        1.00 [-]
max. thickness            32.00 [mm]       EC2 bondcoeff. K1           0.80 [-]
                                           Hardening modulus           0.00 [MPa]
                                           Proportional limit        500.00 [MPa]
                                           Dynamic stress range      152.17 [MPa]
```

Mat. No. 210 is used for future implementation of reinforcing bars standing for compression of bottom concrete (Mat. No. 25). However currently it appears in section, field of reinforcement is close to zero so it generally can be omitted in consideration.

```
No. 31 C 30/37 (EN 1992) C3:insitu slab
-------------------------------------------------------------------------------
Youngs-modulus    E            0 [MPa]      Safetyfactor                1.50 [-]
Poisson-Ratio     mu        0.20 [-]        Strength          fc       30.00 [MPa]
Shear-modulus     G            0 [MPa]      Nomin. strength   fck      30.00 [MPa]
Compression modulus            0 [MPa]      Tens. strength    fctm      2.90 [MPa]
Weight                      25.0 [kN/m3]     5 % t.strength   fctk      2.03 [MPa]
Density           rho       2350 [kg/m3]    95 % t.strength   fctk      3.77 [MPa]
Temp.elongat.coeff.    1.00E-05 [1/°K]      Bond strength     fbd       3.04 [MPa]
                                            Service strength           38.00 [MPa]
                                            Fatigue strength           17.60 [MPa]
                                            Ten.strngth fctd            1.35 [MPa]
```

Mat. No. 31 is used for cracked sections and for ineffective (due to effective width approach) parts of concrete slab.

```
No. 32 C 30/37 (EN 1992) C3:insitu slab
-------------------------------------------------------------------------------
Youngs-modulus    E        32837 [MPa]      Safetyfactor                1.50 [-]
Poisson-Ratio     mu        0.20 [-]        Strength          fc       30.00 [MPa]
Shear-modulus     G        13682 [MPa]      Nomin. strength   fck      30.00 [MPa]
Compression modulus        18243 [MPa]      Tens. strength    fctm      2.90 [MPa]
Weight                      0.0 [kN/m3]     5 % t.strength   fctk      2.03 [MPa]
Density           rho          0 [kg/m3]    95 % t.strength   fctk      3.77 [MPa]
Temp.elongat.coeff.    1.00E-05 [1/°K]      Bond strength     fbd       3.04 [MPa]
                                            Service strength           38.00 [MPa]
                                            Fatigue strength           17.60 [MPa]
                                            Ten.strngth fctd            1.35 [MPa]
```

Mat. No. 32 is used for concrete slab modelised by shell elements. Modification of membrane stiffness of shell elements is done at ASE level with comment GRP2 (group number of quad elements) quex 1E-6 what excludes from calculations axial stiffness at longitudinal direction.

```
No. 50 C 30/37 (EN 1992) C5:supports
-------------------------------------------------------------------------------
Youngs-modulus    E        32837 [MPa]      Safetyfactor                1.50 [-]
Poisson-Ratio     mu        0.20 [-]        Strength          fc       30.00 [MPa]
Shear-modulus     G        13682 [MPa]      Nomin. strength   fck      30.00 [MPa]
Compression modulus        18243 [MPa]      Tens. strength    fctm      2.90 [MPa]
Weight                     25.0 [kN/m3]     5 % t.strength   fctk      2.03 [MPa]
Density           rho       2350 [kg/m3]    95 % t.strength   fctk      3.77 [MPa]
Temp.elongat.coeff.    1.00E-05 [1/°K]      Bond strength     fbd       3.04 [MPa]
                                            Service strength           38.00 [MPa]
                                            Fatigue strength           17.60 [MPa]
                                            Ten.strngth fctd            1.35 [MPa]
```

Mat. No. 50 is used for concrete elements of supports (abutments, pillars, foundation piles). Its C+S effects are switched off to exclude additional deformations. They are of minor importance at stage of conceptual design.

5.2.3 Section stages

Composite sections (both cracked and uncracked) are implemented using construction stages CS1, CS10, CS20, CS21, CS30. Such an approach includes effects not used in current study (for other implementations). In current study CS1 = CS10 = CS20, so there are in fact 3

phases of composite section for support sections x53 (and they reduce to two phases for field x51 sections because CS1 = CS10 = CS20 = CS21 as no bottom concrete is used for them).

The section stages and section properties are presented for field section (with uncracked concrete) and for support section (with cracked concrete) for maximum height of section.

CS1 = CS10 = CS20: steel section alone
CS21: steel section + bottom concrete (only for support sections)
CS30: steel section + bottom concrete (only for support sections) + in-situ slab

- Sections with uncracked concrete

“Steel section” properties of section:

Cross section No. 154.1 = CS 1 - steel alone

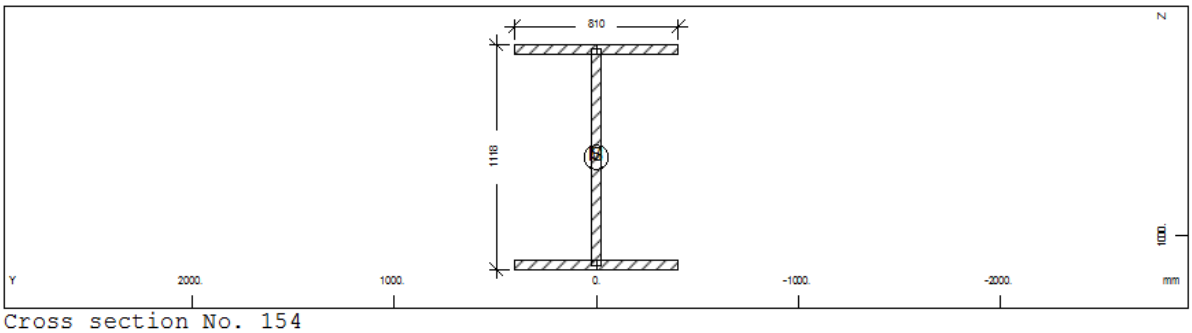

Cross section No. 154

Static properties of cross section

Mat NoR	A[cm2] It[cm4]	Ay/Az/Ayz [cm2]	Iy/Iz/Iyz [cm4]	ys/zs [mm]	modules [N/mm2]	gam [kN/m]
1	1286.96	607.50	2633627.3	0.0	210000	10.10
	6270.0	506.98	398580.9	609.0	80769	

Additional static properties of cross section

Alfa-T [1/°K]	ymin ymax [mm]	zmin zmax [mm]	hymin hzmin [mm]	AK AB [cm2]	MB	Tau-T Tau-B [1/m3]	Tau-Vy Tau-Vz [1/m2]
1.2E-05	-405.0	-559.0		7.359E+02		5.226E+02	2.058E+01
	405.0	559.0				1.255E+02	1.974E+01

“Steel section + bottom concrete (only for support sections)” properties of section:

Cross section No. 154.4 = CS 21 - reinf active:C2

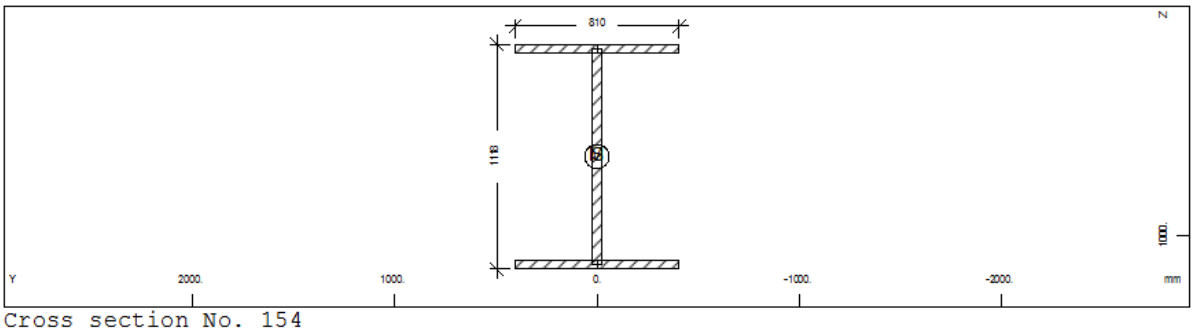

Cross section No. 154

Static properties of cross section

Mat NoR	A[cm2] It[cm4]	Ay/Az/Ayz [cm2]	Iy/Iz/Iyz [cm4]	ys/zs [mm]	modules [N/mm2]	gam [kN/m]
1	1286.96	607.50	2633627.3	0.0	210000	10.10
	6270.0	506.98	398580.9	609.0	80769	

Additional static properties of cross section

Alfa-T [1/°K]	ymin ymax [mm]	zmin zmax [mm]	hymin hzmin [mm]	AK AB [cm2]	MB	Tau-T Tau-B [1/m3]	Tau-Vy Tau-Vz [1/m2]
1.2E-05	-405.0	-559.0		7.359E+02		5.226E+02	2.058E+01
	405.0	559.0				1.255E+02	1.974E+01

“Steel section + bottom concrete (only for support sections) + in-situ slab” properties of section:

Cross section No. 154 - VFT (151)

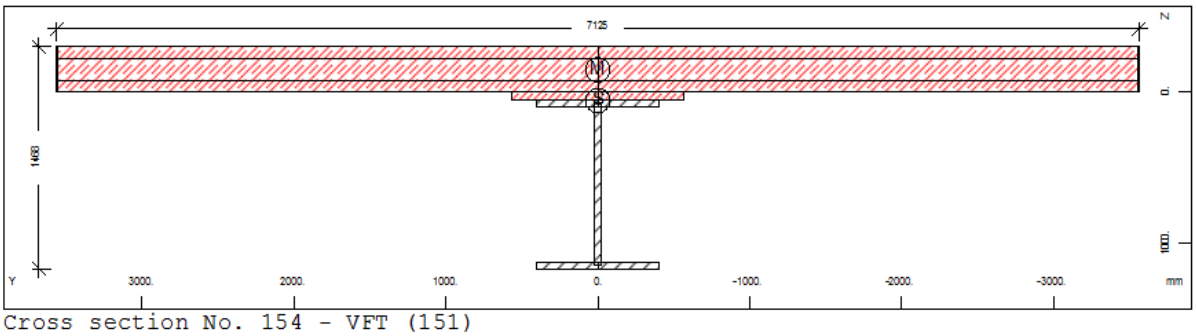

Cross section No. 154 - VFT (151)

Static properties of cross section

Mat NoR	A[cm2] It[cm4]	Ay/Az/Ayz [cm2]	Iy/Iz/Iyz [cm4]	ys/zs [mm]	y/z-sc [mm]	modules [N/mm2]	gam [kN/m]
1	4815.82	3118.65	8035554.0	0.0	0.0	210000	64.97
	6270.0	471.68145603753.		56.1	-147.8	80769	

Additional static properties of cross section

Alfa-T [1/°K]	ymin ymax [mm]	zmin zmax [mm]	hymin hzmin [mm]	AK AB [cm2]	MB	Tau-T Tau-B [1/m3]	Tau-Vy Tau-Vz [1/m2]
1.2E-05	-3562.5	-356.1		1.437E+04		4.747E+00	4.139E+00
	3562.5	1111.9		2.195E+04		1.255E+02	1.689E+01

Section values for warping

Wmin[cm2]	Wmax[cm2]	CM[cm6]	CMS[cm4]	ASwyy[cm6]	ASwzz[cm6]	ry[mm]	rz[mm]
-5237.89	5237.893708299497.		924103.7	5858.15	323.30	0.0	-2510.0

Partial cross sections

Mat NoR	A[cm2] It[cm4]	Ay/Az/Ayz [cm2]	Iy/Iz/Iyz [cm4]	ys/zs [mm]	modules [N/mm2]	gam [kN/m]
1	1286.96	0.12	2633627.3	0.0	210000	10.10
	9949.8	271.17	398580.9	609.0	80769	
30	21915.00	17819.13	170022.2	0.0	32837	54.79
	6408250.4	1141.50901077848.		-145.4	13682	
31	30.00	0.00	0.0	0.0	0	0.08
	9000.6	0.00	3802349.1	-150.0	0	
300	107.24	105.06	6032.1	0.0	200000	0.00
	0.2	7.51	4523914.0	-150.0	76923	

Additional Design Data

M	periphery-O/-I [m2/m]	[m2/m]	deff [mm]	t-min [mm]	t-max [mm]	SMP [o/o]	thet-p [tm2/m]	thet-y [tm2/m]	thet-z [tm2/m]	thet-yz [tm2/m]
	50.376		19.1	0.8	300.0	0.0	23.350	0.697	22.653	
1	5.386		47.8	45.0	52.0	0.0	0.238	0.207	0.031	
30	16.510		600.0	50.0	300.0	0.0	22.531	0.004	22.527	
31	0.020		300.0	300.0	300.0	0.0	0.095		0.095	
**	28.460		0.8	0.8	0.8	0.0	0.000	0.000	0.000	

2A / u = 600 mm = deff is prescribed in this stage for concrete slab for C+S calculations by CSM.

- Support section with cracked concrete

“Steel section” properties of section:

Cross section No. 162.1 = CS 1 - steel alone

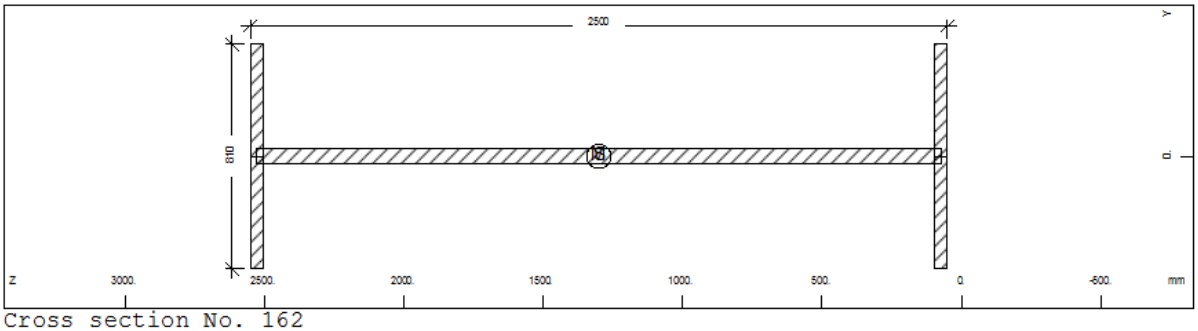

Cross section No. 162

Static properties of cross section

Mat	A[cm2]	Ay/Az/Ayz	Iy/Iz/Iyz	ys/zs	modules	gam
NoR	It[cm4]	[cm2]	[cm4]	[mm]	[N/mm2]	[kN/m]
1	2005.60	607.50	17396003.	0.0	210000	15.74
	6270.0	1212.92	398580.9	1300.0	80769	

Additional static properties of cross section

Alfa-T	ymin	zmin	hymin	AK	MB	Tau-T	Tau-Vy
	ymax	zmax	hzmin	AB		Tau-B	Tau-Vz
[1/°K]	[mm]	[mm]	[mm]	[cm2]		[1/m3]	[1/m2]
1.2E-05	-405.0	-1250.0		1.215E+03		3.165E+02	2.058E+01
	405.0	1250.0				1.255E+02	9.277E+00

“Steel section + bottom concrete (only for support sections)” properties of section:

Cross section No. 162.4 = CS 21 - reinf active:C2

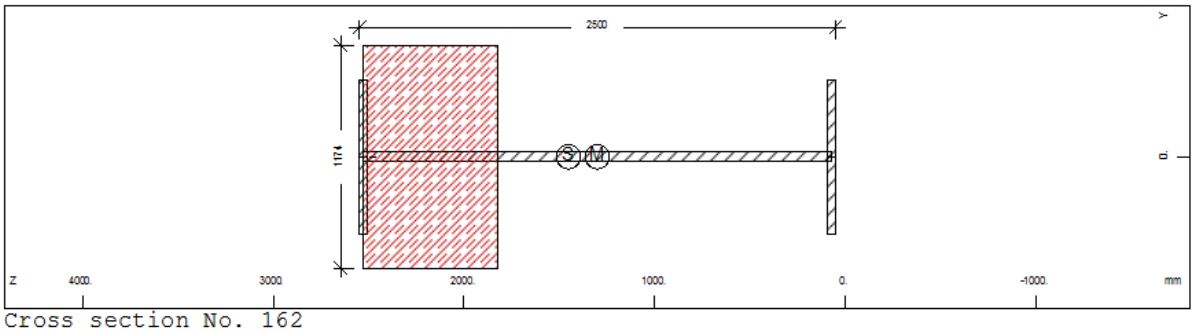

Cross section No. 162

Static properties of cross section

Mat	A[cm2]	Ay/Az/Ayz	Iy/Iz/Iyz	ys/zs	modules	gam
NoR	It[cm4]	[cm2]	[cm4]	[mm]	[N/mm2]	[kN/m]
1	2424.23	607.50	20234200.	0.0	210000	36.32
	6270.0	1117.95	398580.9	1451.5	80769	

"Steel section + bottom concrete (only for support sections) + in-situ slab" properties of section:

Cross section No. 162 - VFT (153)

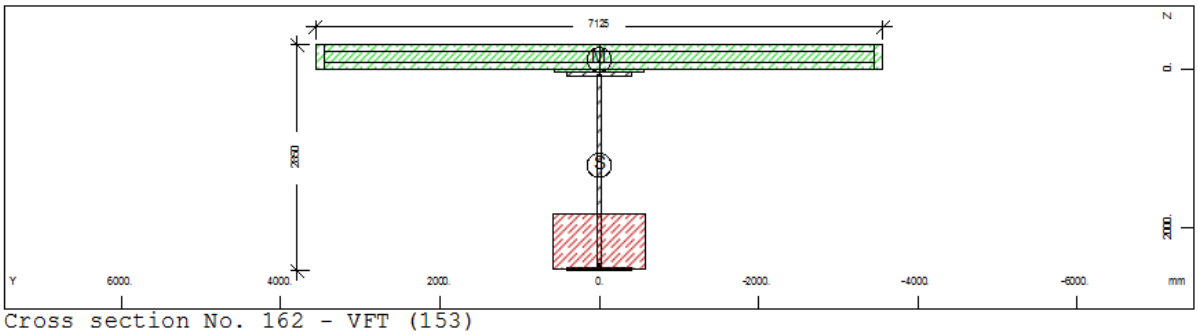

Cross section No. 162 - VFT (153)

Static properties of cross section

Mat NoR	A[cm2] It[cm4]	Ay/Az/Ayz [cm2]	Iy/Iz/Iyz [cm4]	ys/zs [mm]	y/z-sc [mm]	modules [N/mm2]	gam [kN/m]
1	2837.22	360.96	29308114.	0.0	0.0	210000	91.18
	6270.0	859.21	16807513.	1218.4	-115.6	80769	

Additional static properties of cross section

Alfa-T [1/°K]	ymin ymax [mm]	zmin zmax [mm]	hymin hzmin [mm]	AK AB [cm2]	MB	Tau-T Tau-B [1/m3]	Tau-Vy Tau-Vz [1/m2]
1.2E-05	-3562.5	-1518.4		5.530E+03		3.081E+00	3.377E+01
	3562.5	1331.6		3.017E+04		1.255E+02	1.619E+01

Section values for warping

Wmin[cm2]	Wmax[cm2]	CM[cm6]	CMS[cm4]	ASwyy[cm6]	ASwzz[cm6]	ry[mm]	rz[mm]
-10704.61	10704.61	1.511E+10	3656580.3	235.99	411.51	0.0	1827.2

Partial cross sections

Mat NoR	A[cm2] It[cm4]	Ay/Az/Ayz [cm2]	Iy/Iz/Iyz [cm4]	ys/zs [mm]	modules [N/mm2]	gam [kN/m]
1	2005.60	0.12	17396003.	0.0	210000	15.74
	16427.2	587.52	398580.9	1300.0	80769	
25	8229.74		3370085.0	0.0	10667	20.57
	37809512.	75.34	0.0	2177.0	4444	
210	0.64	0.00	0.0	0.0	200000	0.00
	2.2	0.00	0.0	2477.5	76923	
31	21945.00	18040.52	170028.4	0.0	0	54.86
	6417251.4	12406.34	904880243.	-145.5	0	
300	433.63	378.88	24391.9	0.0	200000	0.00
	14.3	280.39	17229374.	-150.0	76923	

Additional Design Data

M	periphery-O/-I [m2/m]	[m2/m]	deff [mm]	t-min [mm]	t-max [mm]	SMP [o/o]	thet-p [tm2/m]	thet-y [tm2/m]	thet-z [tm2/m]	thet-yz [tm2/m]
	53.706		10.6	3.1	701.0	0.0	33.037	10.384	22.653	
1	8.150		49.2	45.0	52.0	0.0	1.397	1.366	0.031	
25	1.402		1174.0			0.0	0.084	0.084		
**	0.004		32.0			0.0	0.000		0.000	
31	16.530		265.5	50.0	300.0	0.0	22.626	0.004	22.622	
**	27.620		3.1	3.1	3.1	0.0	0.000	0.000	0.000	

5.2.4 Construction stages

Number of construction stages of section coincides with number of construction stage of structure used in CSM module, for example: using construction stages CS29 and CS30 means, that for CS30 section stage 30 will be used and for CS29 section stage 29 will be used if defined – otherwise the highest close to 29 will be used (in this project it will be 27). CSM switches on and switches off appropriate group numbers and section stages. It is assumed in this model, that weight of concrete part of section implemented in stage XX is switched on in stage XX-3, for example concrete slab stiffness is implemented in CS30 but its weight already in CS27. Table below summarizes how CSM model superposes section stages, construction stages and load cases:

- Abutments
- Selfweight of composite structure (a: steel, b: bottom concrete, c: insitu slab)
- Scaffoldings LC2, additional weight of wet concrete LC3
- Superimposed dead loads (asphalt,pavement...) LC5

creep and shrinkage steps

CS	Type	LC50xx	LC40xx	LC60xx	LC70xx	LC71xx	Loads	Section stage
3	G1	5003	4003		7003	7103		cs.1
5	C1	5005	4005	6005	7005	7105		cs.1
10	G1	5010	4010		7010	7110	a	cs.10
15	C1	5015	4015	6015	7015	7115		cs.10
20	G1	5020	4020		7020	7120	b	cs.20
21	G1	5021	4021		7021	7121		cs.21
25	C1	5025	4025	6025	7025	7125		cs.21
26	B	5026	4026		7026	7126		cs.21
27	G1	5027	4027		7027	7127	c	cs.21
30	G1	5030	4030		7030	7130		cs.30
35	C1	5035	4035	6035	7035	7135		cs.30
40	G2	5040	4040		7040	7140		cs.30
45	C2	5045	4045	6045	7045	7145		cs.30
46	C2	5046	4046	6046	7046	7146		cs.30
47	C2	5047	4047	6047	7047	7147		cs.30
48	C2	5048	4048	6048	7048	7148		cs.30
49	C2	5049	4049	6049	7049	7149		cs.30

LC 50xx - incremental loadcases (displacements and forces)
LC 40xx - total loadcases (displacements and forces)
LC60xx - incremental inner stresses from creep and shrinkage
LC70xx - incremental stress results 50xx+60xx
LC71xx - total stress results 40xx+sum(6000 to 60xx)

G1 - dead load of structural elements
G2 - dead load of nonstructural elements
C1 - creep and shrinkage from G1
C2 - creep and shrinkage from G1+G2

Stages of composie section stiffness:
y.1: steel alone
y.2: steel+bottom concrete
y.3: steel+bottom concrete+insitu slab

Global Settings
Dead load of elements is automatically activated.
Creep and shrinkage analysis will be done by AQB.
Creep and shrinkage values are calculated in advance in CSM.

Construction Stages

CS	Type	Time d	RH %	Temp °C	launch m	laun_2 m	Title
3	G_1						supports
5	C_1	28	80	8			C+S supports 28days
10	G_1						Steel structure
15	C_1	28	80	8			C+S 28days
20	G_1						scaffoldings+bottom concrete wei
21	G_1						stiffnes of bottom concrete ON
25	C_1	28	80	8			C+S bottom concrete 28days
26	B						zero step for consistency reason
27	G_1						weight of insitu wet concrete sl
30	G_1						scaffoldings removed
35	C_1	56	80	8			C+S til opening 56days
40	G_2						superimposed dead loads
45	C_2	296	80	8			C+S infinity
46	C_2	894	80	8			C+S infinity
47	C_2	2693	80	8			C+S infinity
48	C_2	8123	80	8			C+S infinity
49	C_2	24494	80	8			C+S infinity

Groups activation in CSM:

Group Properties

Grp	active from CS	active untilCS	deadload from CS	Hfix from	Bedd from	Deck from	ASTI until	T0 d	TS d	FAC1	PHIF	QUEA	QEMX
11	3	999	3					14	5		1.00		
12	3	999	3					14	5		1.00		
13	3	999	3					14	5		1.00		
14	3	999	3					14	5		1.00		
21	3	999	3					14	5		1.00		
22	3	999	3					14	5		1.00		
23	3	999	3					14	5		1.00		
24	3	999	3					14	5		1.00		
31	3	999	3					14	5		1.00		
32	3	999	3					14	5		1.00		
33	3	999	3					14	5		1.00		
34	3	999	3					14	5		1.00		
41	10	999	10					14	5		1.00		
42	10	999	10					14	5		1.00		
43	10	999	10					14	5		1.00		
44	10	999	10					14	5		1.00		
50	group exists but is never used												
51	10	999	10	3		-3		14	5		1.00		
52	10	999	10	3		-3		14	5		1.00		
53	10	999	10	3		-3		14	5		1.00		
61	10	999	10	3		-3		14	5		1.00		
62	10	999	10	3		-3		14	5		1.00		
63	10	999	10	3		-3		14	5		1.00		
64	10	999	10	3		-3		14	5		1.00		
71	10	999	10					14	5		1.00		
72	10	999	10					14	5		1.00		
73	10	999	10					14	5		1.00		
74	10	999	10					14	5		1.00		
81	30	999	30					14	5		1.00		
82	30	999	30					14	5		1.00		
83	30	999	30					14	5		1.00		
91	group exists but is never used												
92	group exists but is never used												
93	group exists but is never used												
111	3	999	3					14	5		1.00		
112	3	999	3					14	5		1.00		
113	3	999	3					14	5		1.00		
114	3	999	3					14	5		1.00		
151	10	999	10	3		-3		14	5		1.00		

Group Properties

Grp	active from CS	active untilCS	deadload from CS	Hfix from	Bedd from	Deck from	ASTI until	T0 d	TS d	FAC1	PHIF	QUEA	QEMX
152	10	999	10	3		-3		14	5		1.00		
153	10	999	10	3		-3		14	5		1.00		
191	group exists but is never used												
192	group exists but is never used												
193	group exists but is never used												

Hfix: beam hinges of this group are fixed starting from this Constrction Stage
Deck: dead weight activation of cross sectional construction stages

Loads activation in CSM:

Additional Loads

LC	Type	active from CS	active until CS	faktor
5	G_2	40	999	1.000000
2	G_1	20	29	1.000000
3	G_1	27	29	1.000000
4	G_1	27	999	1.000000

C+S calculation are done considering particular construction stage and part of total force calculated for particular time.

Creep values for concrete of in-situ slab in uncracked beam elements:

```
Creep values are evaluated according to the design code of the database.

Creep Values
 Grp Mno Type  deff  T0    CS    CS    CS    CS    CS    CS
               [m]   d     5    15    25    35    45    46
-------------------------------------------------------------
  51  30 beam 0.600  14    -     -     -   0.64  0.44  0.38
Creep Values
 Grp Mno Type  deff  T0    CS    CS    CS | total
               [m]   d    47    48    49 |
-----------------------------------------------
  51  30 beam 0.600  14  0.30  0.17  0.07 |  2.00 / 1.05 **
** For the ** marked elements, the creep value will be additionally devided by
the printed factor in AQB due to the problem of the reference E-modulus [Ecm/Ec0].
Please refer to Heft 525 Deutscher Ausschuss fuer Stahlbeton S. 65ff.
```

Shrinkage values for concrete of in-situ slab in uncracked beam elements:

```
Shrinkage Values *10^-6
 Grp Mno Type  deff  TS    CS    CS    CS    CS    CS    CS
               [m]   d     5    15    25    35    45    46
-------------------------------------------------------------
  51  30 beam 0.600   5    -     -     -  -30.2 -61.2 -57.6
Shrinkage Values *10^-6
 Grp Mno Type  deff  TS    CS    CS    CS | total
               [m]   d    47    48    49 |
-----------------------------------------------
  51  30 beam 0.600   5 -35.7 -15.7  -5.8 | -206.
```

Calculations of stresses and forces are according to default Sofistik parameters:

```
Overview loadcases. (see also CSM manual chapter 2 loadcases)
Total CS displacements and forces starting   at loadcase number. 4000
Difference displacements and forces starting at loadcase number. 5000
AQB inner stresses from creep and shrinkage from loadcasenumber. 6000
Stress results of the AQB-LCST-evaluation   from loadcasenumber. 7000
```

Actually only concrete of in-situ slab is active for C+S effects, other materials have parameters prescribed to result in almost zero C+S effects:

```
Scalable creep and shrinkage parameters, additional input
 MNO GRP  PHI-total  EPS-total d-eff-QUAD[m]  T0   TS
  50   -     0.010  -0.000002        -        -   -
  25   -     0.010  -0.000002        -        -   -
```

For consecutive construction stages FE models are presented below:

LC5003:

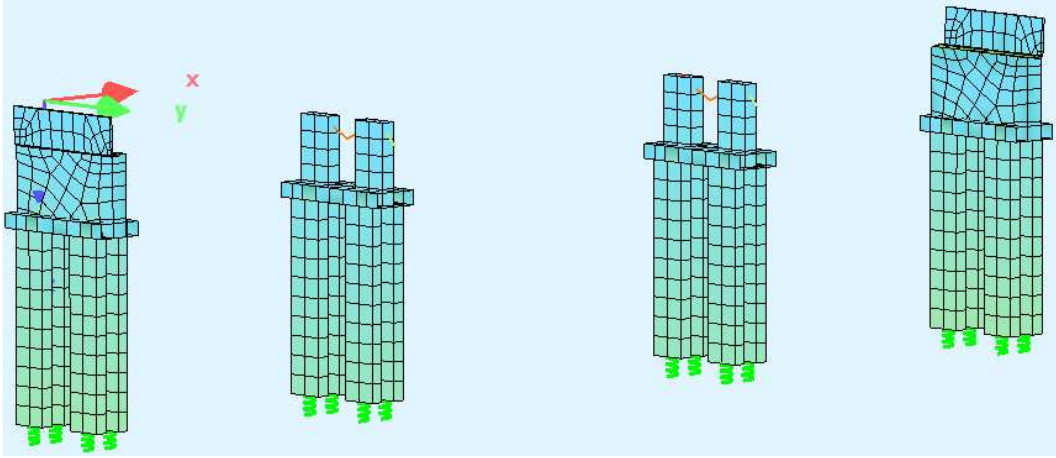

Fig. 5.12 FE model visualization – LC5003, CS3: supports realized

In CS3 supports are realized.

LC5005 – creep and shrinkage step, 28 days (but C+S is reduced almost to zero for supports): no particular change in visualization.

In CS5 C+S of supports is calculated (for purposes of this project it is almost zero step).

LC5010:

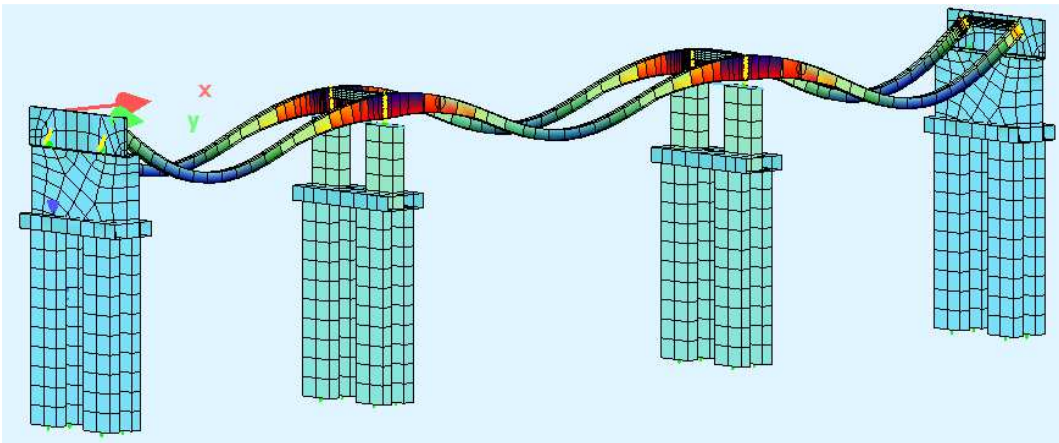

Fig. 5.13 FE model visualization – LC5010, CS10: steel structure implemented – deformations

In CS10 steel structure is implemented.

LC5015 – creep step (but C+S reduced for supports): no particular change in visualization.

In CS15 C+S next 28 days (of supports in fact) is calculated – this step is almost zero (in case of prefabricated concrete parts like VFT it is important step).

LC5020:

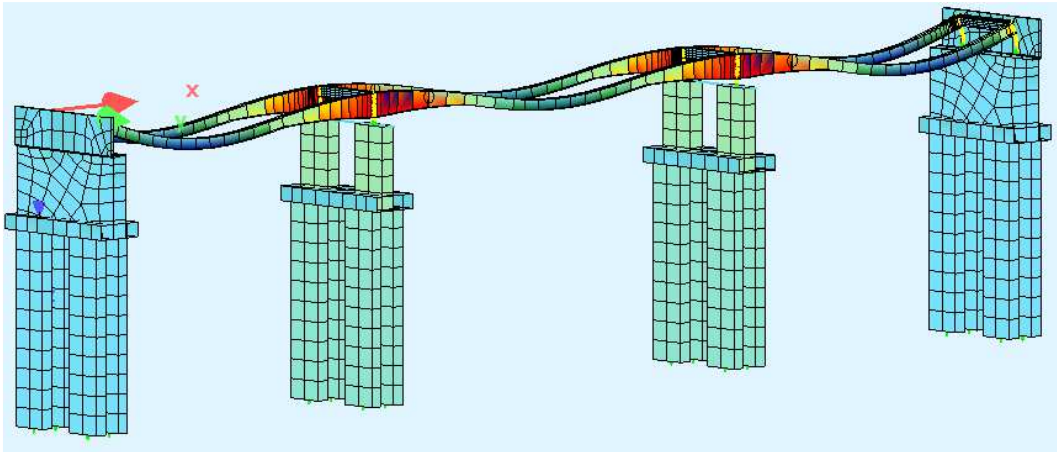

Fig. 5.14 FE model visualization – LC5020, CS20: wet bottom concrete applied – deformations

In CS20 weight of bottom concrete is switched on.

LC5021 – zero step concerning loads.

In CS21 stiffness of bottom concrete is switched on.

LC5025:

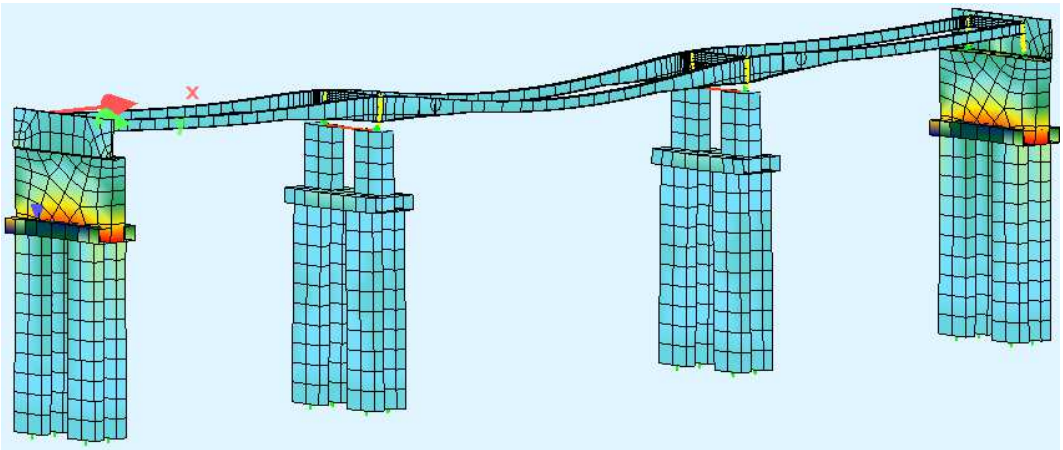

Fig. 5.15 FE model visualization – LC5025, CS25: bottom concrete stiffness and C+S – deformations (deformation and stresses are highly over scaled so that even C+S effects 100 times divided for support elements are visualised; on this background it is visible that effect of C+S of bottom concrete is negligible)

In CS25 C+S 28 days is calculated (here: bottom concrete C+S).

LC5026 – zero step for consistency reasons.
CS26 is zero step.

LC5027:

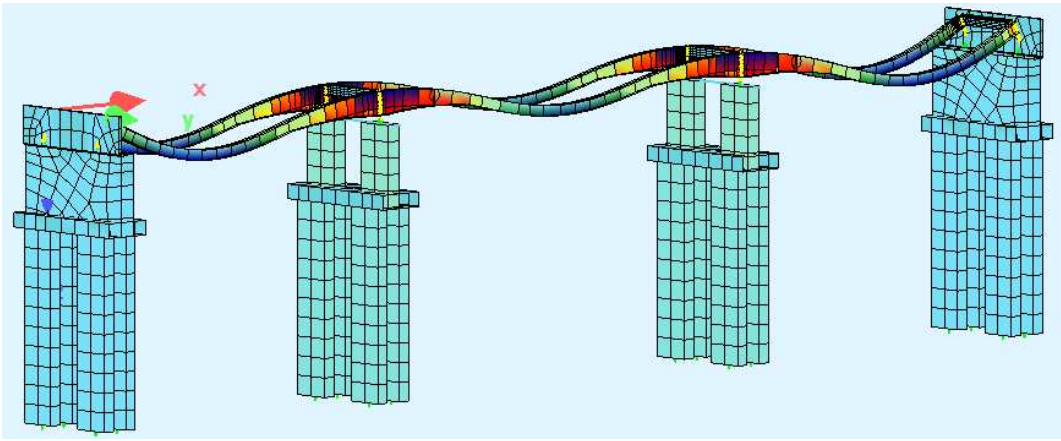

Fig. 5.16 FE model visualization – LC5027, CS27: casting in-situ slab – deformations

In CS loads are implemented: scaffoldings, weight of in-situ concrete, additional load standing for wet concrete of in-situ slab.

LC5030:

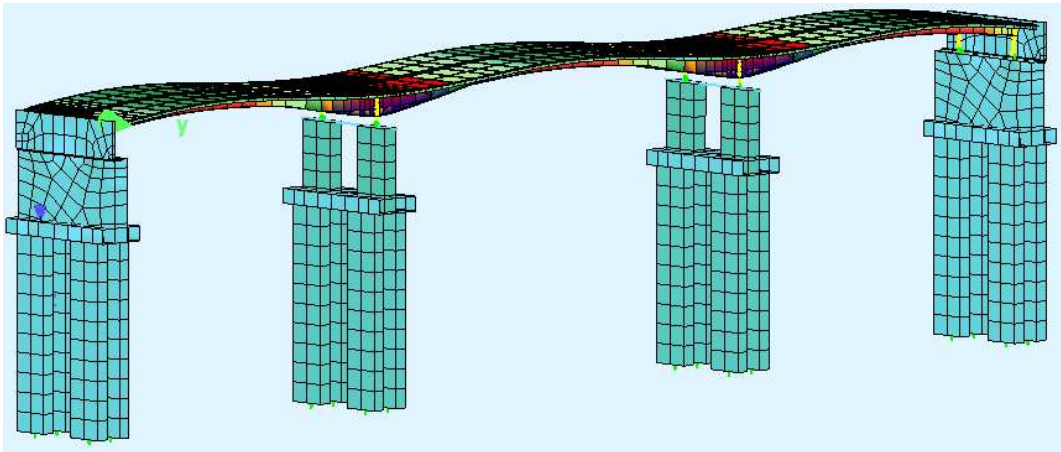

Fig. 5.17 FE model visualization – LC5030, CS03: in-situ slab stiffness and its relief – deformations

In CS stiffness of in-situ slab is switched on and loads are removed from the model: scaffoldings, additional load standing for wet concrete of in-situ slab.

LC5035:

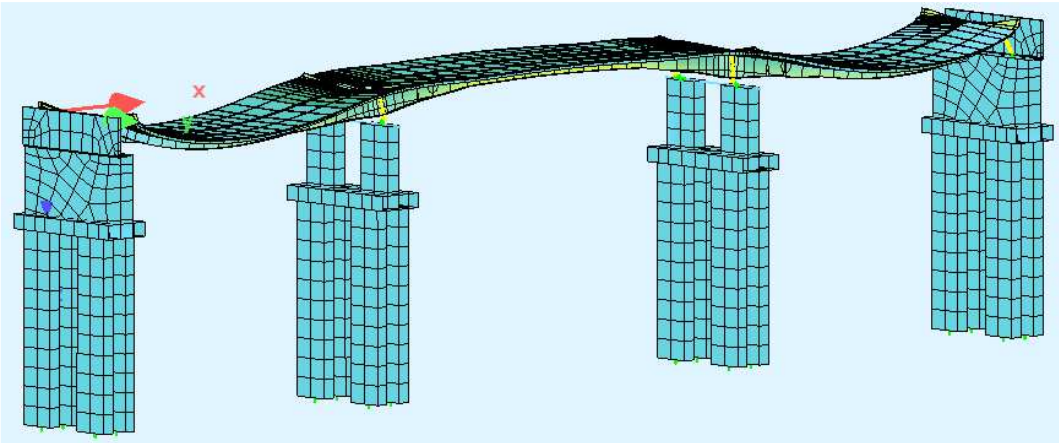

Fig. 5.18 FE model visualization – LC5035, CS35: in-situ slab C+S – deformations

In CS35 C+S 56 days is calculated (here: mainly in-situ slab shrinkage).

LC5040:

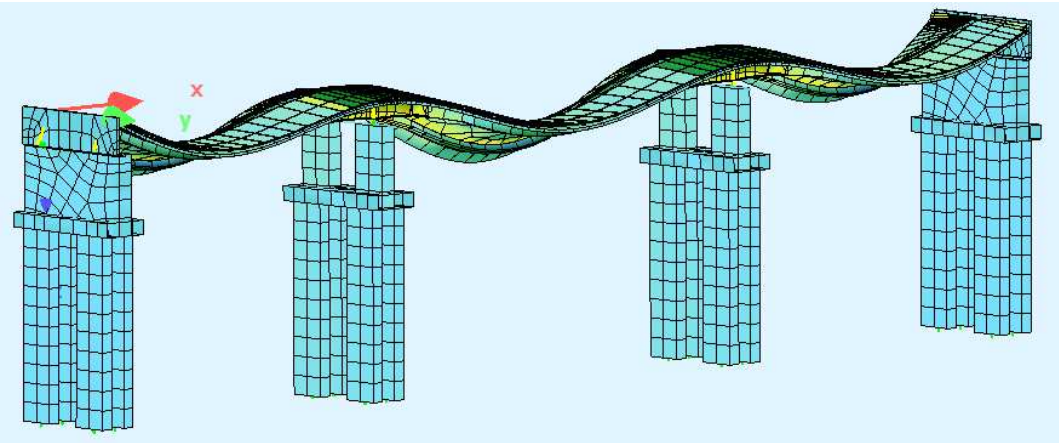

Fig. 5.19 FE model visualization – LC5040, CS40: equipment loads – deformations

In CS40 superimposed dead loads (pavement, asphalt) are implemented.

LC5045:

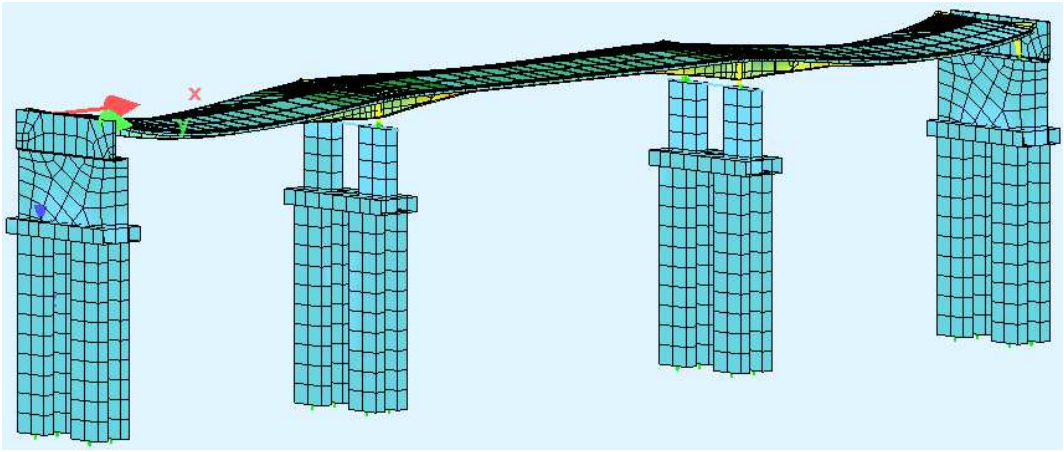

Fig. 5.20 FE model visualization – LC5045, CS45: C+S – deformations

CS45 is first of five parts of 36500 days C+S.

LC5046, 5047, 5048, 5049 looks similar to 5045. LC5045 to 5049 constitute final C+S type C2.

Finally for ULS and SLS checks two design situations are considered: with C2 and without C2, it means that C+S developing after bridge erection is taken into account optional, if it causes increment of stresses / deflections / reactions / internal forces etc. (if it acts unfavourably).

5.2.5 External loads

Static calculation are done for individual load cases and then precombinations and combinations are realized.

- LM1 model

gr1a (LM1)
Loadcases

11 - 39	Uniformly distributed loads for UDL for lanes, left side (sidewalk)
711 - 36	Uniformly distributed loads for UDL for lanes, right side
110 -139	Unit tandem loads, first lane, left side (sidewalk)
210 -239	Unit tandem loads, second lane, left side (sidewalk)
410 -439	Unit tandem loads, first lane, right side
510 -539	Unit tandem loads, second lane, right side

For example: total UDL load for “left position” (including pedestrian load) for span 1 consists of LC11, 12, 14, 15, 18, 19, as presented below.

LC11:

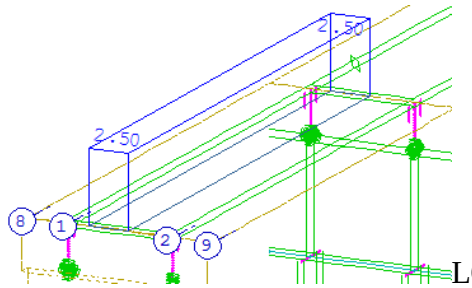

LC12:

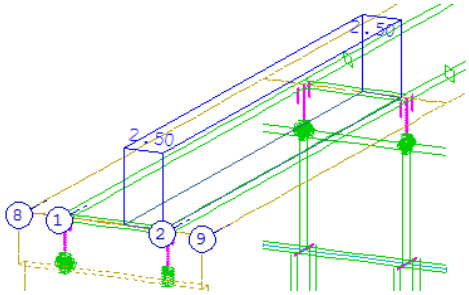

LC14:

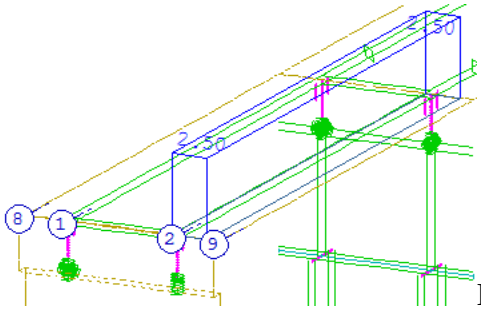

LC15:

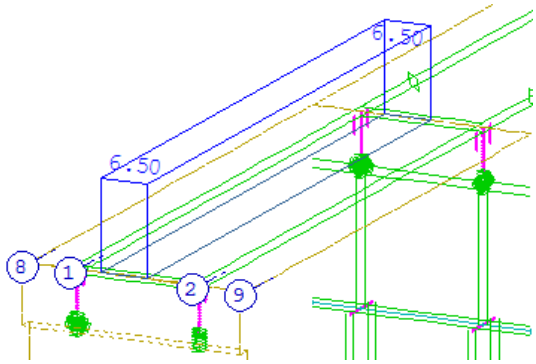

LC18:

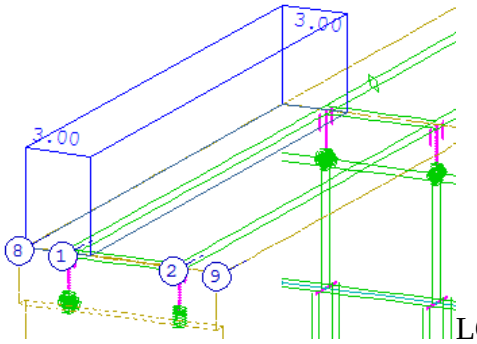

LC19:

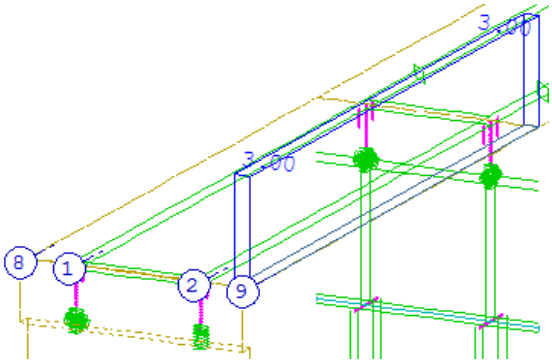

Fig. 5.21 LCs for covering a UDL model for side-span (crowd load included)

All these cases are taken for superposition only if unfavourable.

There are unit loads for TS (100 kN / axis) used and they are multiplied next by factors 3 and 2 to get full value of tandem loads on 2 lanes. 2 different positions are considered: 1) first tandem next to left side and 2) first tandem next to right side. Maximum two tandems can appear in this particular bridge under consideration.

Example of load and deformation under unit tandem load (LC524):

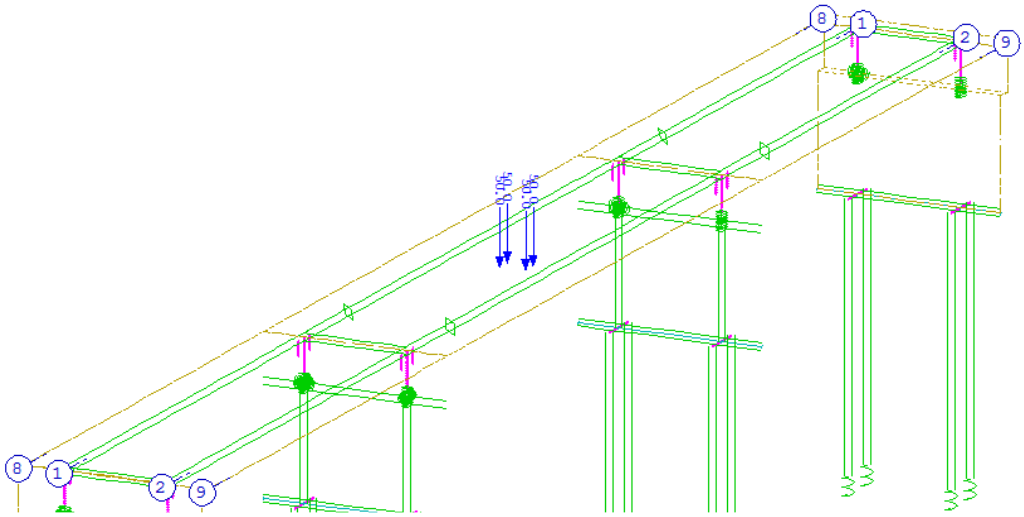

Fig. 5.22 Unit tandem load in chosen localization

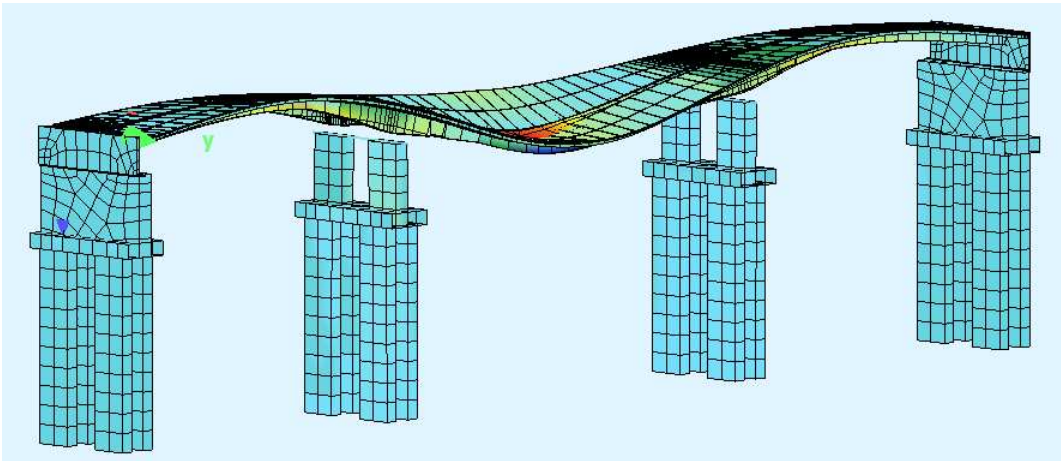

Fig. 5.23 Deformation caused by unit tandem load

According to superposition rules:

xy01	max My	Moment
xy02	min My	
xy03	max Vz	Transversal force
xy04	min Vz	
xy05	max N	Axial force
xy06	min N	
xy07	max Spring force	Reaction in spring
xy08	min Spring force	
xy09	max uz	Vertical displacement
xy10	min uz	

specific load cases (LC2211 – 2370: part-precombinations) are done with x = 2 and y = 2 and 3. They are used for later precombinations. Special procedure is used to get most unfavourable loads of LM1.

- Settlements

Loadcases

801 Vertical movement of support P1: 10mm.
802 Vertical movement of support P2: 10mm.
803 Vertical movement of support P3: 10mm.
804 Vertical movement of support P4: 10mm.

Deformation for LC803:

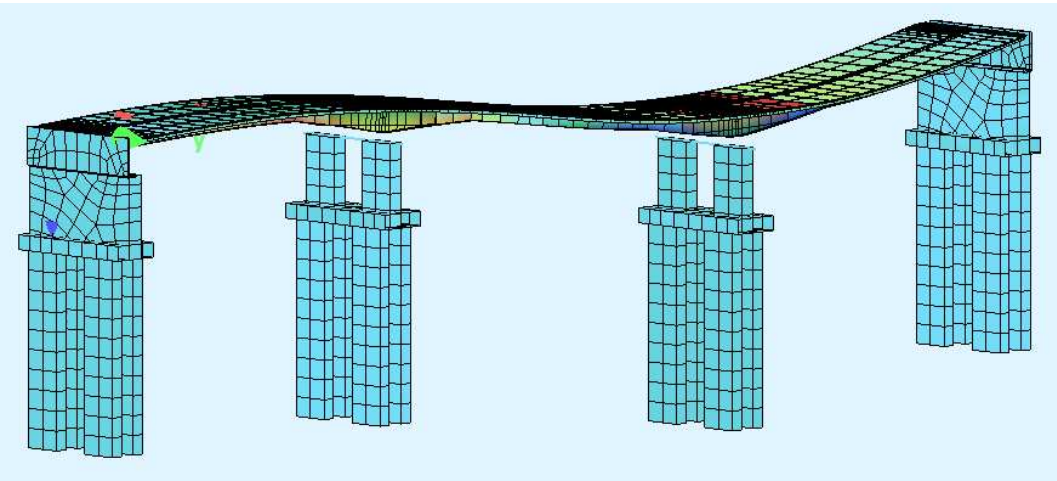

Fig. 5.24 Deformation caused by support 3 settlement of 10 mm

- Temperature

Loadcases

901 TN+: +31deg
902 TN-: -31deg
910 TM: 18deg, bottom warmer
911 TM bottom warmer+ w*TN
912 TM bottom warmer- w*TN
913 w*TM bottom warmer+TN
914 w*TM bottom warmer-TN
920 TM: 15deg, upper warmer
921 TM upper warmer+w*TN
922 TM upper warmer-w*TN
923 w*TM upper warmer+TN
924 w*TM upper warmer-TN

5.2.6 Precombinations

Loads type G1, G2, C1, C2 are grouped in single precombinations just by a simple sum. G is just a simple sum of G1 and G2.

Loads type Q, F, T are precombined according to superposition rule (the same total C as superposition C1 and C2).

Precombinations Q, F, T:

```
Combination rule Number   1
Design Combination
Resulting loadcases type G_1
Loadcase selection
Number  factor type                                  Title
  5003    1.00 permanent load grouped in actions   supports
  5010    1.00 permanent load grouped in actions   Steel structure
  5020    1.00 permanent load grouped in actions   scaffoldings+bottom conc
  5021    1.00 permanent load grouped in actions   stiffnes of bottom concr
  5026    1.00 permanent load grouped in actions   zero step for consistenc
  5027    1.00 permanent load grouped in actions   weight of insitu wet con
  5030    1.00 permanent load grouped in actions   scaffoldings removed

Generated Loadcases
Number Comb Title
  2001    1 MAX-MY BEAM Part precomb G_1
  2001    1 MAX-P SPRI Part precomb G_1
  2001    1 MAX-UZ NODE Part precomb G_1
```

G1: LC2001

```
Superposition according to EuroNorm 1994 (2004) Composite Structures


Combination rule Number   1
Design Combination
Resulting loadcases type G_2
Loadcase selection
Number  factor type                                  Title
  5040    1.00 permanent load grouped in actions   superimposed dead loads

Generated Loadcases
Number Comb Title
  2002    1 MAX-MY BEAM Part precomb G_2
  2002    1 MAX-P SPRI Part precomb G_2
  2002    1 MAX-UZ NODE Part precomb G_2
```

G2: LC2002

G: LC2005 = G1 + G2 = LC2001 + LC2002

```
Combination rule Number   1
Design Combination
Resulting loadcases type C_1
Loadcase selection
Number  factor type                                  Title
  5005    1.00 permanent load grouped in actions   C+S supports 28days
  5015    1.00 permanent load grouped in actions   C+S 28days
  5025    1.00 permanent load grouped in actions   C+S bottom concrete 28da
  5035    1.00 permanent load grouped in actions   C+S til opening 56days

Generated Loadcases
Number Comb Title
  2021    1 MAX-MY BEAM Part precomb C_1
  2021    1 MAX-P SPRI Part precomb C_1
  2021    1 MAX-UZ NODE Part precomb C_1
```

C1: LC2021

```
Combination rule Number   1
Design Combination
Resulting loadcases type C_2
Loadcase selection
Number  factor type                                  Title
  5045    1.00 permanent load grouped in actions   C+S infinity
  5046    1.00 permanent load grouped in actions   C+S infinity
  5047    1.00 permanent load grouped in actions   C+S infinity
  5048    1.00 permanent load grouped in actions   C+S infinity
  5049    1.00 permanent load grouped in actions   C+S infinity

Generated Loadcases
Number Comb Title
  2022    1 MAX-MY BEAM Part precomb C_2
  2022    1 MAX-P SPRI Part precomb C_2
  2022    1 MAX-UZ NODE Part precomb C_2
```

C2: LC2022

```
Combination rule Number   1
Design Combination
Resulting loadcases type C+S
Loadcase selection
Number  factor type                                  Title
  5005    1.00 permanent load grouped in actions   C+S supports 28days
  5015    1.00 permanent load grouped in actions   C+S 28days
  5025    1.00 permanent load grouped in actions   C+S bottom concrete 28da
  5035    1.00 permanent load grouped in actions   C+S til opening 56days
  5045    1.00 Conditional LC     C+S infinity
  5046    1.00 Conditional LC     C+S infinity
  5047    1.00 Conditional LC     C+S infinity
  5048    1.00 Conditional LC     C+S infinity
  5049    1.00 Conditional LC     C+S infinity

Generated Loadcases
Number Comb Title
  2026    1 MAX-MY BEAM Precombination C
  2027    1 MIN-MY BEAM Precombination C
  2028    1 MAX-VZ BEAM Precombination C
  2029    1 MIN-VZ BEAM Precombination C
  2030    1 MAX-N BEAM Precombination C
  2031    1 MIN-N BEAM Precombination C
  2032    1 MAX-P SPRI Precombination C
  2033    1 MIN-P SPRI Precombination C
  2034    1 MAX-UZ NODE Precombination C
  2035    1 MIN-UZ NODE Precombination C
```

C = ”C1 and C2 according to superposition rule”:

z+ 2y01	max My	Moment
z+ 2y02	min My	
z+ 2y03	max Vz	Transversal force
z+ 2y04	min Vz	
z+ 2y05	max N	Axial force
z+ 2y06	min N	
z+ 2y07	max Spring force	Reaction in spring
z+ 2y08	min Spring force	
z+ 2y09	max uz	Vertical displacement
z+ 2y10	min uz	

with z = 25 and y = 0.

```
Superposition according to EuroNorm 1994 (2004) Composite Structures


Combination rule Number   1
Design Combination
Resulting loadcases type F_1
Loadcase selection
Number  factor type                                  Title
   801    1.00 Conditional LC     f10mm P(1)
   802    1.00 Conditional LC     f10mm P(2)
   803    1.00 Conditional LC     f10mm P(3)
   804    1.00 Conditional LC     f10mm P(4)

Generated Loadcases
Number Comb Title
  2601    1 MAX-MY BEAM Precombination F
  2602    1 MIN-MY BEAM Precombination F
  2603    1 MAX-VZ BEAM Precombination F
  2604    1 MIN-VZ BEAM Precombination F
  2605    1 MAX-N BEAM Precombination F
  2606    1 MIN-N BEAM Precombination F
  2607    1 MAX-P SPRI Precombination F
  2608    1 MIN-P SPRI Precombination F
  2609    1 MAX-UZ NODE Precombination F
  2610    1 MIN-UZ NODE Precombination F
```

F: according to superposition rule:

z+ 2y01	max My	Moment
z+ 2y02	min My	
z+ 2y03	max Vz	Transversal force
z+ 2y04	min Vz	
z+ 2y05	max N	Axial force
z+ 2y06	min N	
z+ 2y07	max Spring force	Reaction in spring
z+ 2y08	min Spring force	
z+ 2y09	max uz	Vertical displacement
z+ 2y10	min uz	

with z = 0 and y = 6.

```
Combination rule Number   1
Design Combination
Resulting loadcases type T_1
Loadcase selection
Number  factor type                                  Title
   901    1.00 Exclusive LC   A 1  TN:+31
   902    1.00 Exclusive LC   A 1  TN:-30
   910    1.00 Exclusive LC   A 1  TM:18deg-bottom warmer
   911    1.00 Exclusive LC   A 1  TM(18:bot.warm)+wTN
   912    1.00 Exclusive LC   A 1  TM(18:bot.warm)-wTN
   913    1.00 Exclusive LC   A 1  wTM(18:bot.warm)+TN
   914    1.00 Exclusive LC   A 1  wTM(18:bot.warm)-TN
   920    1.00 Exclusive LC   A 1  TM:15deg upper warmer
   921    1.00 Exclusive LC   A 1  TM(15:up.warm)+wTN
   922    1.00 Exclusive LC   A 1  TM(15:up.warm)-wTN
   923    1.00 Exclusive LC   A 1  wTM(15:up.warm)+TN
   924    1.00 Exclusive LC   A 1  wTM(15:up.warm)-TN

Generated Loadcases
Number Comb Title
  2701    1 MAX-MY BEAM Precombination T
  2702    1 MIN-MY BEAM Precombination T
  2703    1 MAX-VZ BEAM Precombination T
  2704    1 MIN-VZ BEAM Precombination T
  2705    1 MAX-N BEAM Precombination T
  2706    1 MIN-N BEAM Precombination T
  2707    1 MAX-P SPRI Precombination T
  2708    1 MIN-P SPRI Precombination T
  2709    1 MAX-UZ NODE Precombination T
  2710    1 MIN-UZ NODE Precombination T
```

T: according to superposition rule:

z+ 2y01	max My	Moment
z+ 2y02	min My	
z+ 2y03	max Vz	Transversal force
z+ 2y04	min Vz	
z+ 2y05	max N	Axial force
z+ 2y06	min N	
z+ 2y07	max Spring force	Reaction in spring
z+ 2y08	min Spring force	
z+ 2y09	max uz	Vertical displacement
z+ 2y10	min uz	

with z = 0 and y = 7.

```
Superposition according to EuroNorm 1994 (2004) Composite Structures


Combination rule Number   1
Design Combination
Resulting loadcases type Q_1
Loadcase selection
Number  factor type                                  Title
  2211    1.00 Exclusive LC   A 1  MAX-MY BEAM PN-EN:K
  2212    1.00 Exclusive LC   A 1  MIN-MY BEAM PN-EN:K
  2213    1.00 Exclusive LC   A 1  MAX-VZ BEAM PN-EN:K
  2214    1.00 Exclusive LC   A 1  MIN-VZ BEAM PN-EN:K
  2215    1.00 Exclusive LC   A 1  MAX-N BEAM PN-EN:K
  2216    1.00 Exclusive LC   A 1  MIN-N BEAM PN-EN:K
  2217    1.00 Exclusive LC   A 1  MAX-P SPRI PN-EN:K
  2218    1.00 Exclusive LC   A 1  MIN-P SPRI PN-EN:K
  2219    1.00 Exclusive LC   A 1  MAX-UZ NODE PN-EN:K
  2220    1.00 Exclusive LC   A 1  MIN-UZ NODE PN-EN:K
  2221    1.00 Exclusive LC   A 1  MAX-MY BEAM PN-EN:K
    .
    .
    .
  2359    1.00 Exclusive LC   A 1  MAX-UZ NODE PN-EN:K
  2360    1.00 Exclusive LC   A 1  MIN-UZ NODE PN-EN:K
  2361    1.00 Exclusive LC   A 1  MAX-MY BEAM PN-EN:K
  2362    1.00 Exclusive LC   A 1  MIN-MY BEAM PN-EN:K
  2363    1.00 Exclusive LC   A 1  MAX-VZ BEAM PN-EN:K
  2364    1.00 Exclusive LC   A 1  MIN-VZ BEAM PN-EN:K
  2365    1.00 Exclusive LC   A 1  MAX-N BEAM PN-EN:K
  2366    1.00 Exclusive LC   A 1  MIN-N BEAM PN-EN:K
  2367    1.00 Exclusive LC   A 1  MAX-P SPRI PN-EN:K
  2368    1.00 Exclusive LC   A 1  MIN-P SPRI PN-EN:K
  2369    1.00 Exclusive LC   A 1  MAX-UZ NODE PN-EN:K
  2370    1.00 Exclusive LC   A 1  MIN-UZ NODE PN-EN:K
Generated Loadcases
Number Comb Title
  2101    1 MAX-MY BEAM Precombination Q
  2102    1 MIN-MY BEAM Precombination Q
  2103    1 MAX-VZ BEAM Precombination Q
  2104    1 MIN-VZ BEAM Precombination Q
  2105    1 MAX-N BEAM Precombination Q
  2106    1 MIN-N BEAM Precombination Q
  2107    1 MAX-P SPRI Precombination Q
  2108    1 MIN-P SPRI Precombination Q
  2109    1 MAX-UZ NODE Precombination Q
  2110    1 MIN-UZ NODE Precombination Q
```

Q: according to superposition rule:

z+ 2y01	max My	Moment
z+ 2y02	min My	
z+ 2y03	max Vz	Transversal force
z+ 2y04	min Vz	
z+ 2y05	max N	Axial force
z+ 2y06	min N	
z+ 2y07	max Spring force	Reaction in spring
z+ 2y08	min Spring force	
z+ 2y09	max uz	Vertical displacement
z+ 2y10	min uz	

with z = 0 and y = 1.

5.2.7 Combinations

Precombinations Q, F, T are combined according to EN 1990 formula with appropriate factors to get combinations from external loads acting of final sections in the structure. This combinations are added to results of CSM to get stresses in structure.

On the other hand (to get total internal forces) combinations of G1, G2, C1, C2, Q, F, T are done despite of section stages.

Superposition rule:

z+ 3y01	max My	Moment
z+ 3y02	min My	
z+ 3y03	max Vz	Transversal force
z+ 3y04	min Vz	
z+ 3y05	max N	Axial force
z+ 3y06	min N	
z+ 3y07	max Spring force	Reaction in spring
z+ 3y08	min Spring force	
z+ 3y09	max uz	Vertical displacement
z+ 3y10	min uz	

This way design combinations are created:

		z
3101-3110	ULS total forces G1,G2,C1,C2,Q,F,T	100
3111-3121	ULS total G1,G2,C1,C2	110
3141-3150	ULS Q,F,T	140
3201-3210	SLS total forces G1,G2,C1,C2,Q,F,T	200
3211-3221	SLS total G1,G2,C1,C2	210
3241-3250	SLS Q,F,T	240

For example input for design combination 3101 – 3110 is presented below:

Ultimate Design combination
Superposition according to manual MAXIMA formula 1

$$E_d = E\left\{\sum_{j\geq 1}\gamma_{G,j}\cdot G_{k,j} \oplus \gamma_P \cdot P_k \oplus \gamma_{Q,1}\cdot Q_{k,1} \oplus \sum_{i>1}\gamma_{Q,i}\cdot\psi_{0,i}\cdot Q_{k,i}\right\}$$

Resulting loadcases type Ultimate Design combination

Loadcase selection and Actions

Act	type	γ-u	γ-f	γ-a	ψ-0	ψ-1	ψ-2	ψ-1'	
LC	factor	Type of loadcase							Title
C_2	P	1.35	0.00	1.00	1.00	1.00	1.00	1.00	C+S
2022	1.00	Conditional LC					MAX-MY BEAM Part precomb		
C_1	P	1.35	1.00	1.00	1.00	1.00	1.00	1.00	C+S
2021	1.00	permanent load grouped in actions							MAX-MY BEAM Part precom.
F_1	Q	1.20	0.00	1.00	1.00	1.00	1.00	1.00	settlements
2601	1.00	Exclusive LC		A 7			MAX-MY BEAM Precombinati		
2602	1.00	Exclusive LC		A 7			MIN-MY BEAM Precombinati		
2603	1.00	Exclusive LC		A 7			MAX-VZ BEAM Precombinati		
2604	1.00	Exclusive LC		A 7			MIN-VZ BEAM Precombinati		
2605	1.00	Exclusive LC		A 7			MAX-N BEAM Precombinatio		
2606	1.00	Exclusive LC		A 7			MIN-N BEAM Precombinatio		
2607	1.00	Exclusive LC		A 7			MAX-P SPRI Precombinatio		
2608	1.00	Exclusive LC		A 7			MIN-P SPRI Precombinatio		
2609	1.00	Exclusive LC		A 7			MAX-UZ NODE Precombinati		
2610	1.00	Exclusive LC		A 7			MIN-UZ NODE Precombinati		
G_2	G	1.35	1.00	1.00	1.00	1.00	1.00	1.00	gn
2002	1.00	permanent load grouped in actions							MAX-MY BEAM Part precom.
G_1	G	1.35	1.00	1.00	1.00	1.00	1.00	1.00	gk
2001	1.00	permanent load grouped in actions							MAX-MY BEAM Part precom.
Q	Q	1.50	0.00	1.00	0.75	0.75	0.20	0.80	gr1a EN
2101	1.00	Exclusive LC		A 5			MAX-MY BEAM Precombinati		
2102	1.00	Exclusive LC		A 5			MIN-MY BEAM Precombinati		
2103	1.00	Exclusive LC		A 5			MAX-VZ BEAM Precombinati		
2104	1.00	Exclusive LC		A 5			MIN-VZ BEAM Precombinati		
2105	1.00	Exclusive LC		A 5			MAX-N BEAM Precombinatio		
2106	1.00	Exclusive LC		A 5			MIN-N BEAM Precombinatio		
2107	1.00	Exclusive LC		A 5			MAX-P SPRI Precombinatio		
2108	1.00	Exclusive LC		A 5			MIN-P SPRI Precombinatio		
2109	1.00	Exclusive LC		A 5			MAX-UZ NODE Precombinati		
2110	1.00	Exclusive LC		A 5			MIN-UZ NODE Precombinati		
T_1	Q	1.50	0.00	1.00	0.60	0.60	0.50	1.00	temp
2701	1.00	Exclusive LC		A 8			MAX-MY BEAM Precombinati		
2702	1.00	Exclusive LC		A 8			MIN-MY BEAM Precombinati		
2703	1.00	Exclusive LC		A 8			MAX-VZ BEAM Precombinati		
2704	1.00	Exclusive LC		A 8			MIN-VZ BEAM Precombinati		
2705	1.00	Exclusive LC		A 8			MAX-N BEAM Precombinatio		
2706	1.00	Exclusive LC		A 8			MIN-N BEAM Precombinatio		
2707	1.00	Exclusive LC		A 8			MAX-P SPRI Precombinatio		
2708	1.00	Exclusive LC		A 8			MIN-P SPRI Precombinatio		
2709	1.00	Exclusive LC		A 8			MAX-UZ NODE Precombinati		
2710	1.00	Exclusive LC		A 8			MIN-UZ NODE Precombinati		

Generated Loadcases

Number	Comb	Title
3101	1	MAX-MY BEAM ULS total sum
3102	1	MIN-MY BEAM ULS total sum
3103	1	MAX-VZ BEAM ULS total sum
3104	1	MIN-VZ BEAM ULS total sum
3105	1	MAX-N BEAM ULS total sum

```
3106    1 MIN-N BEAM ULS total sum
3107    1 MAX-P SPRI ULS total sum
3108    1 MIN-P SPRI ULS total sum
3109    1 MAX-UZ NODE ULS total sum
3110    1 MIN-UZ NODE ULS total sum
```

5.2.8 Stresses in composite sections

Superposition of stresses is done with AQB module.

There are presented:

- incremental results at stress points for individual stages (from LC50xy saved to design case LC71xy),
- results at stress points for individual precombinations C1, C2, G1, G2, Q, F, T (saved to design case LC75xy),
- results at stress points for SLS and ULS combinations for two design situations: partial C+S and final C+S (saved to design case LC73xy),
- maximum values of stresses at stress points for ULS (envelope) saved to design case LC7399,
- maximum values of maximum tension, maximum compression and reduced stress in steel for ULS (envelope) saved to design case LC7399.

The detailed results are presented in enclosure to this documentation. Here are presented only results for LC7399 (total envelope).

5.3 Results of calculations

Envelope of the most important ULS results is presented. It includes both design situations: with partial C+S (C_1) and final C+S (C_2).

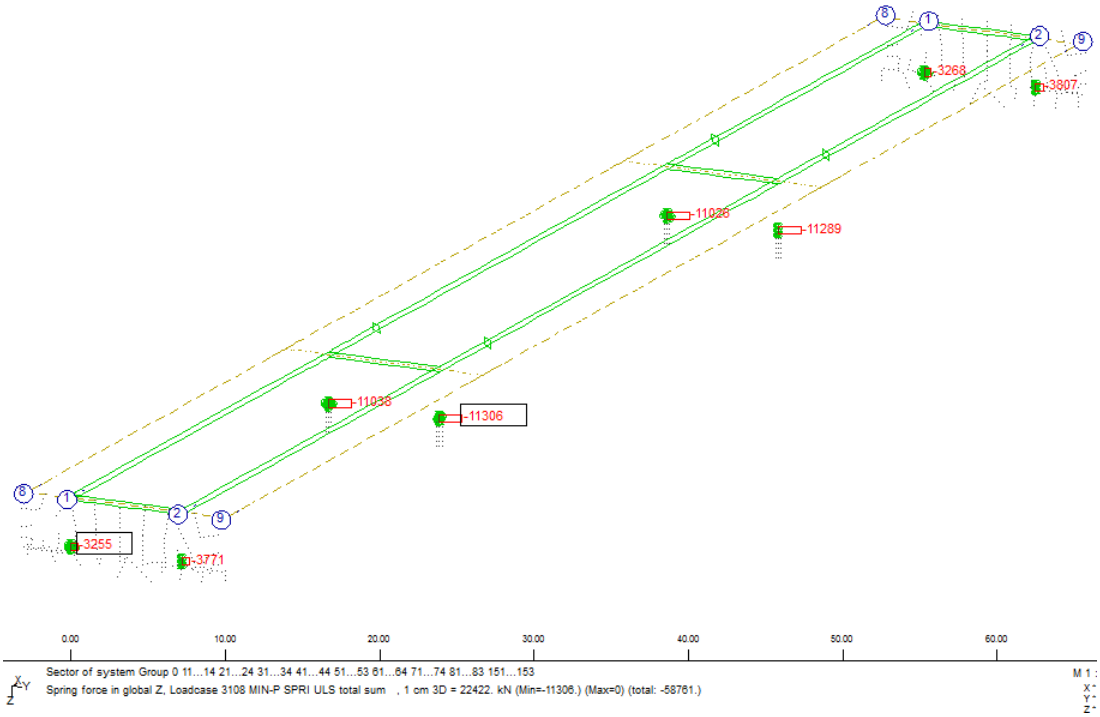

Fig. 5.25 Maximum reactions in ULS

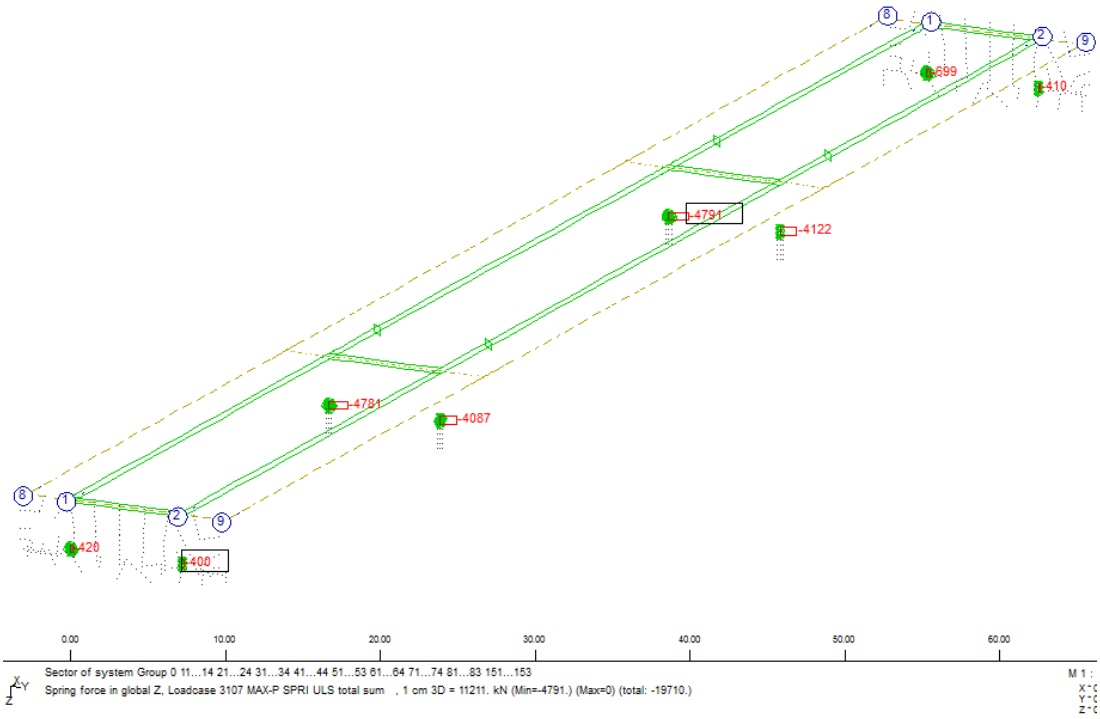

Fig. 5.26 Minimum reactions in ULS

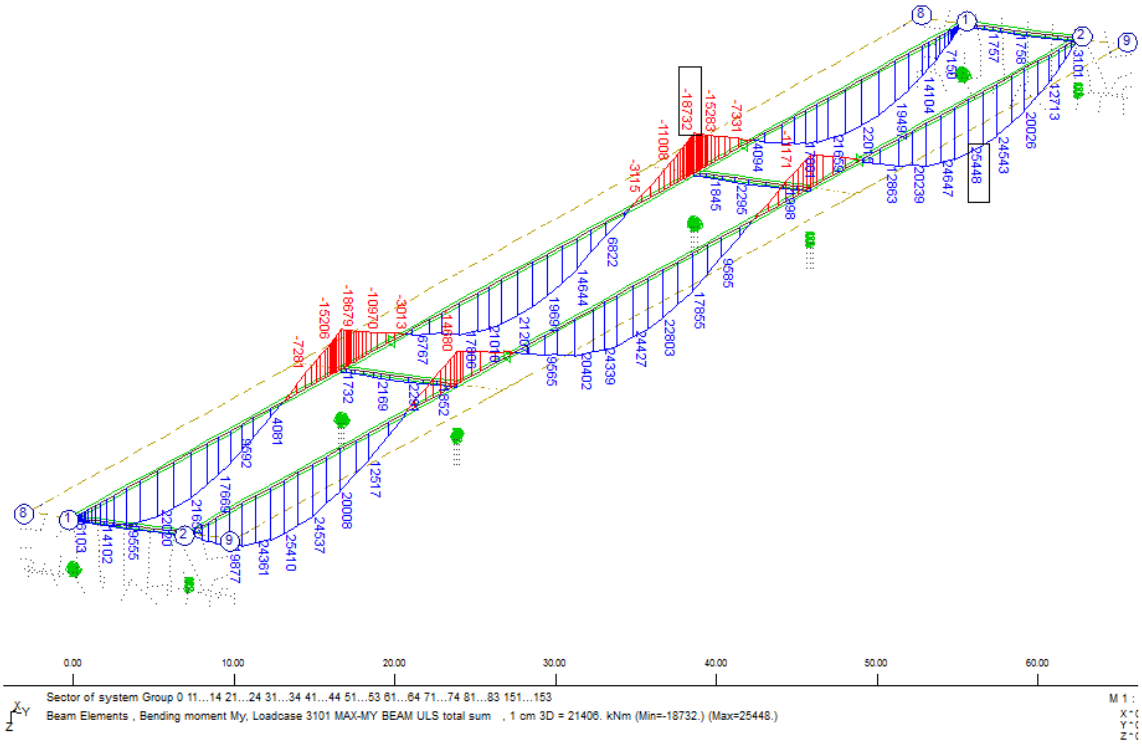

Fig. 5.27 Maximum bending moments MY in ULS

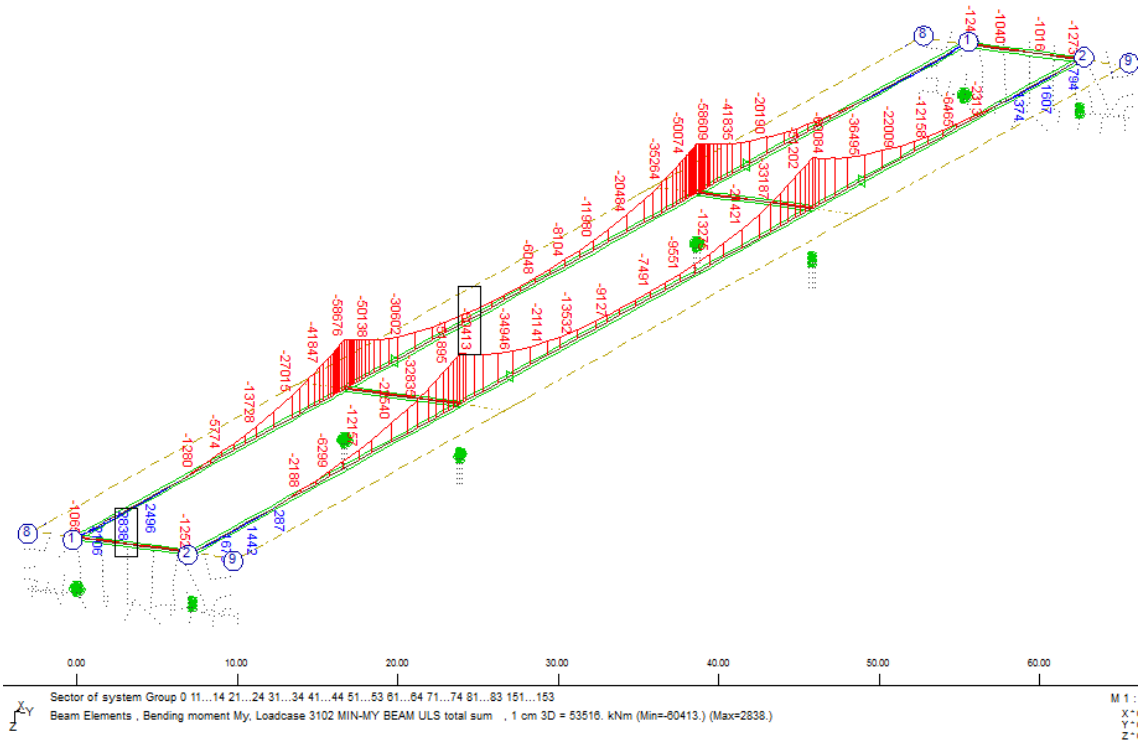

Fig. 5.28 Minimum bending moments MY in ULS

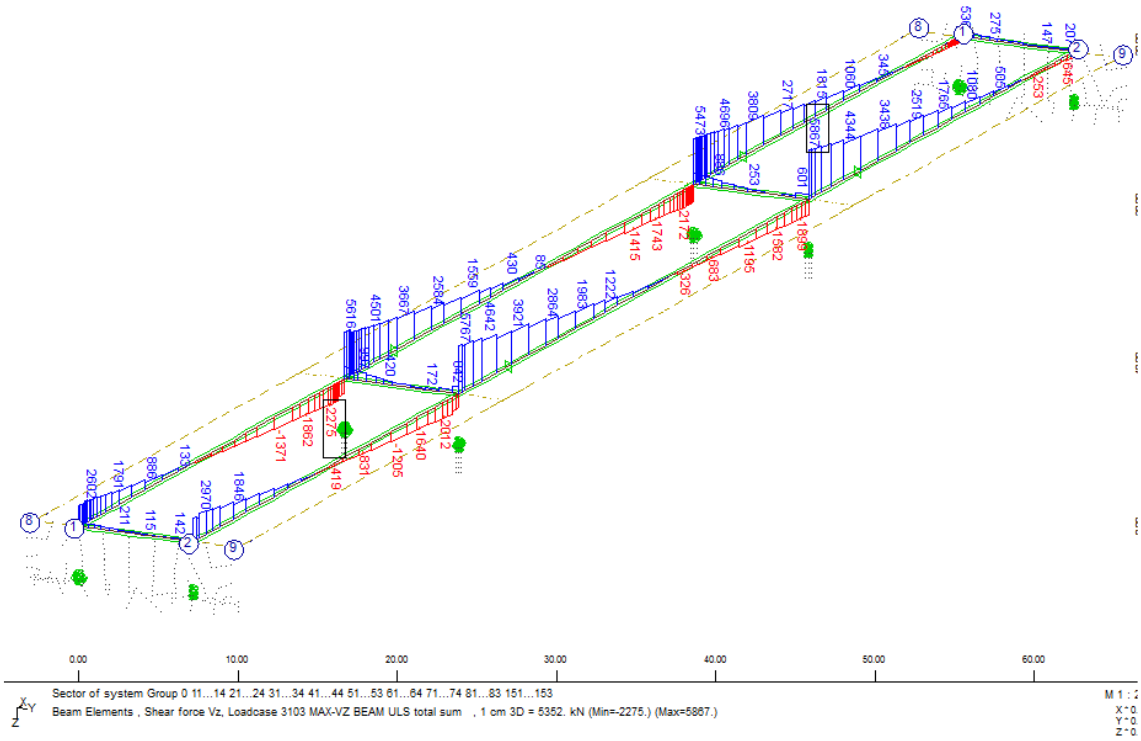

Fig. 5.29 Maximum shear forces VZ in ULS

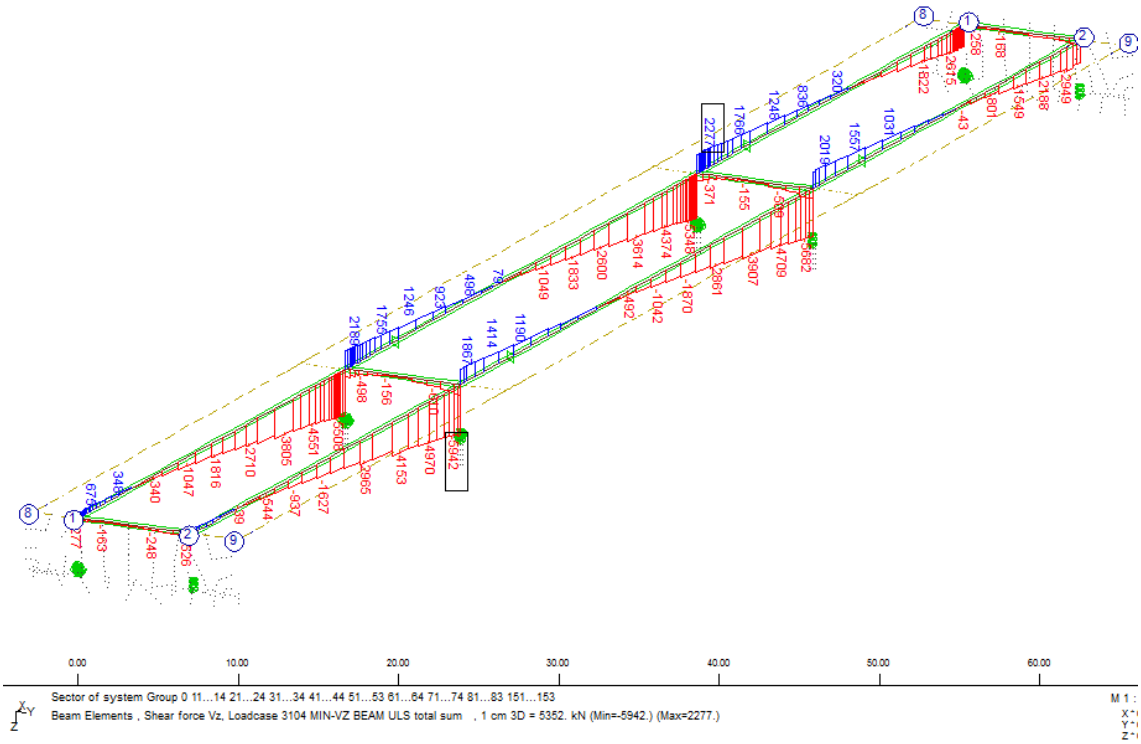

Fig. 5.30 Minimum shear forces VZ in ULS

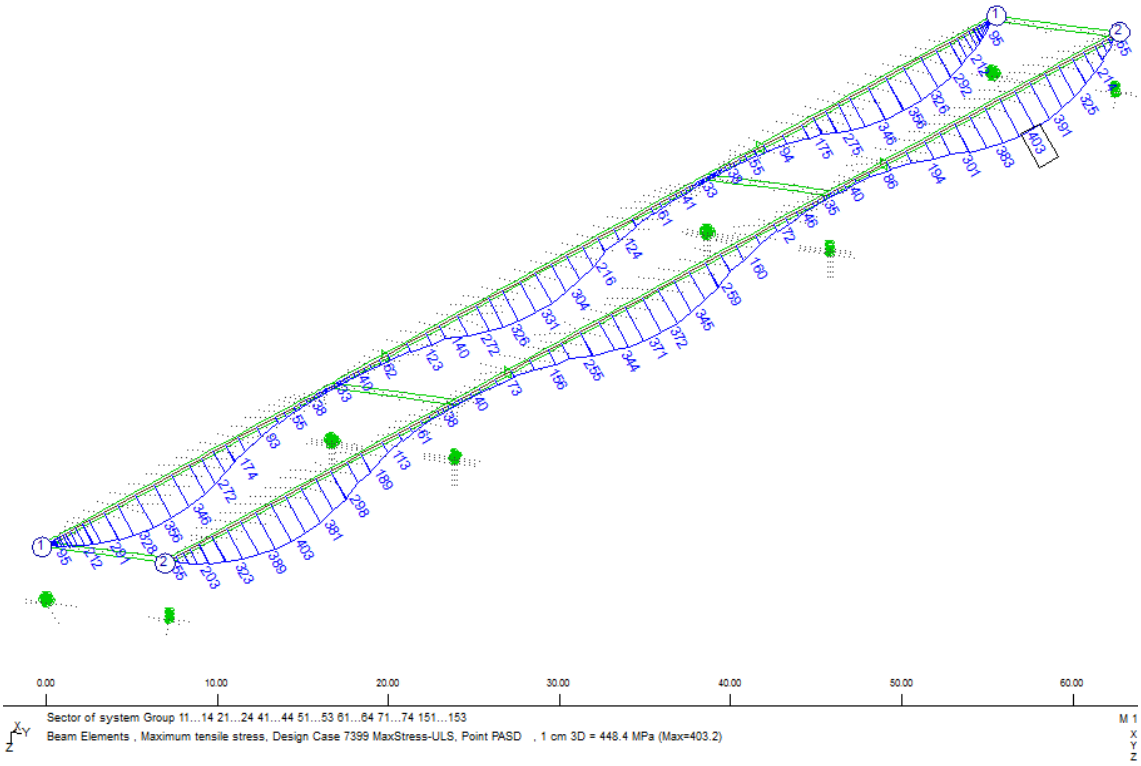

Fig. 5.31 Maximum tensile stress in steel bottom flange in ULS

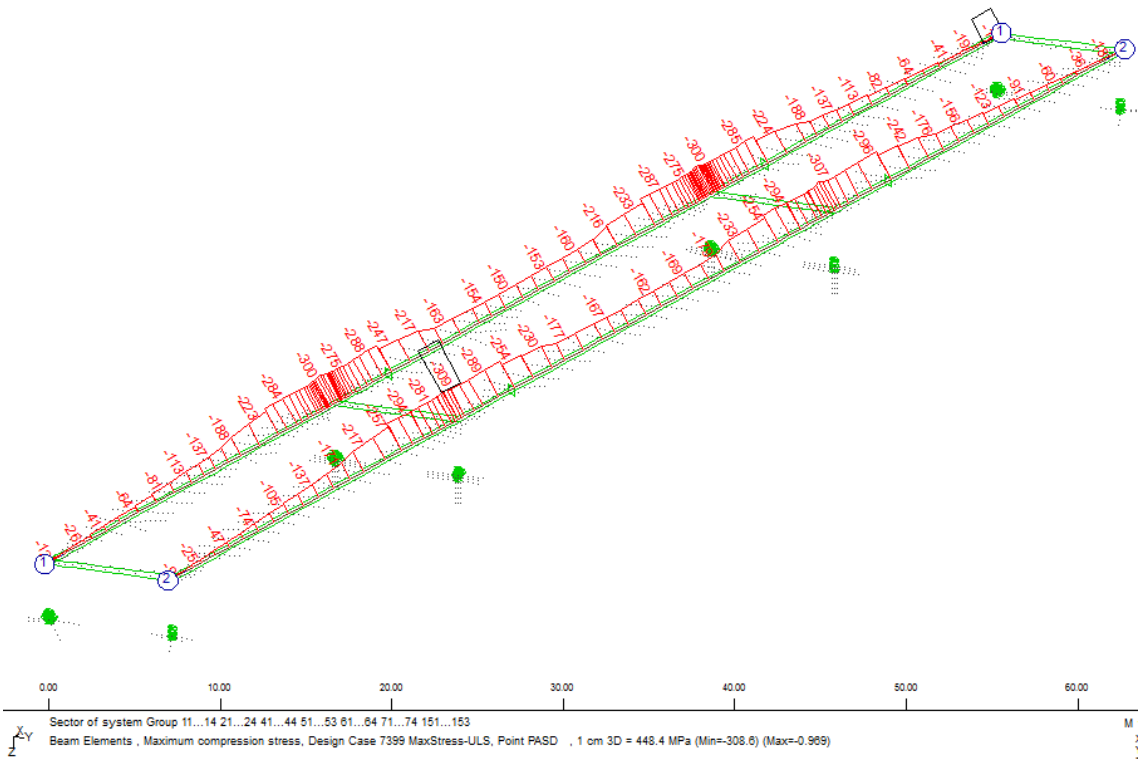

Fig. 5.32 Maximum compression stress in steel bottom flange in ULS

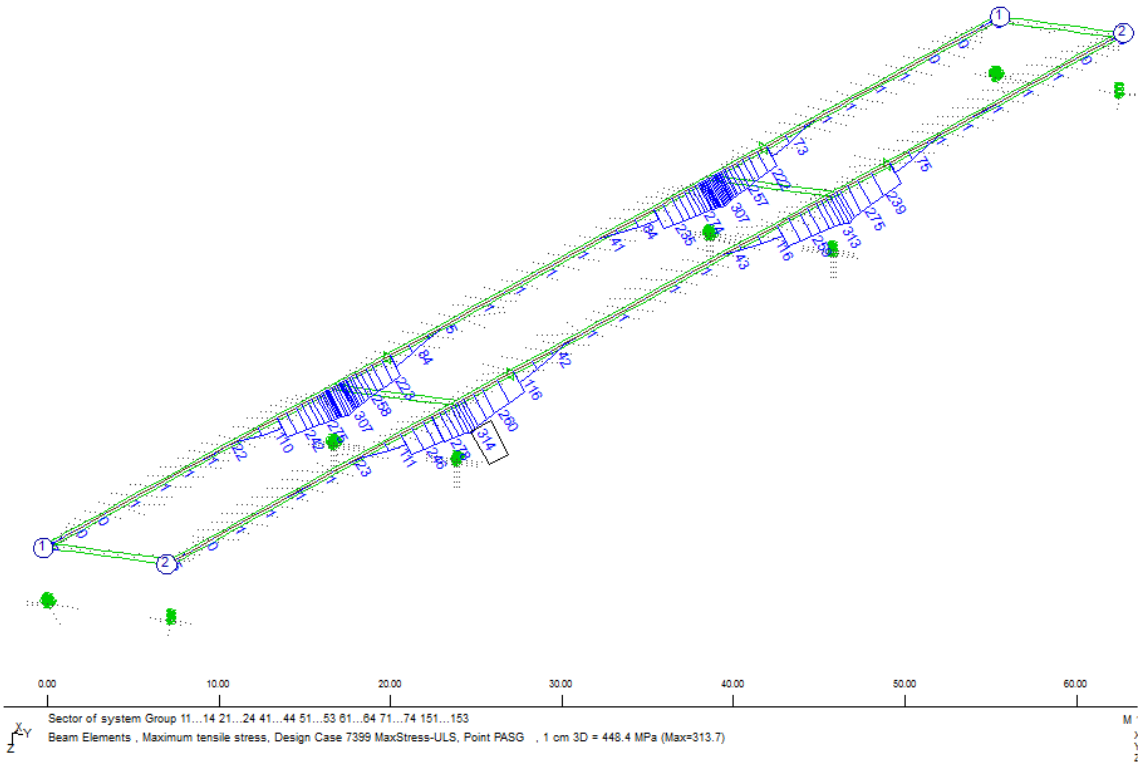

Fig. 5.33 Maximum tensile stress in steel upper flange in ULS

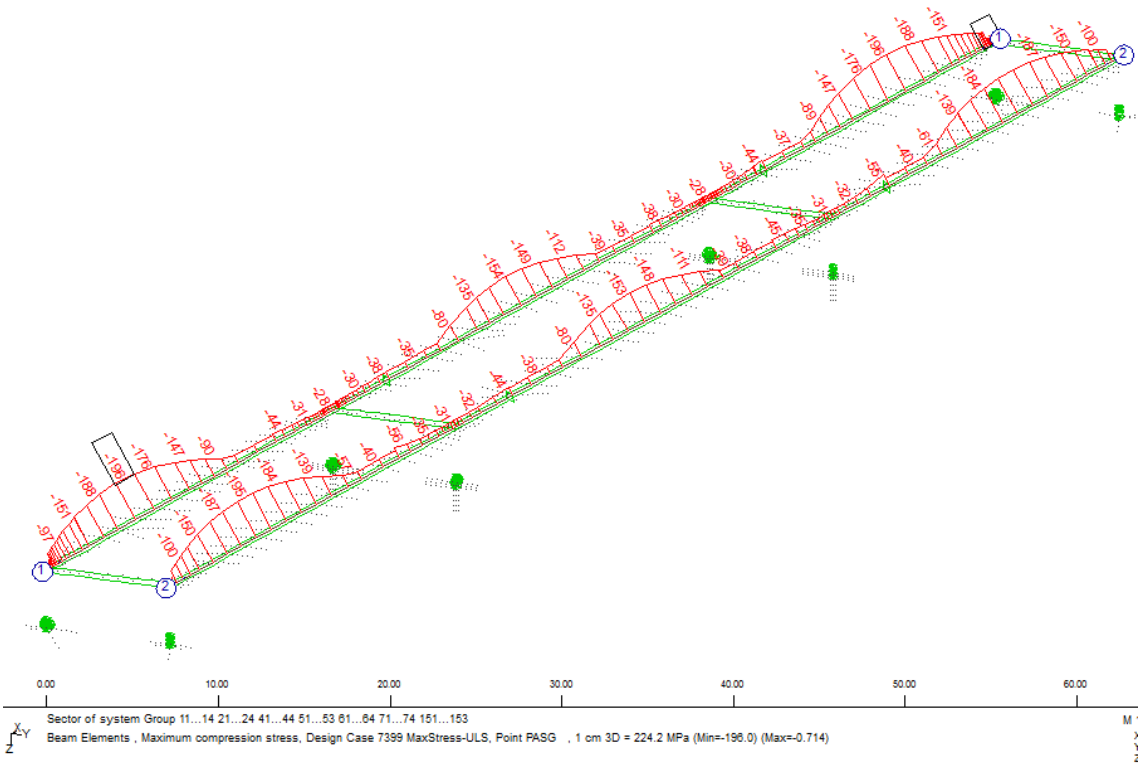

Fig. 5.34 Maximum compression stress in steel upper flange in ULS

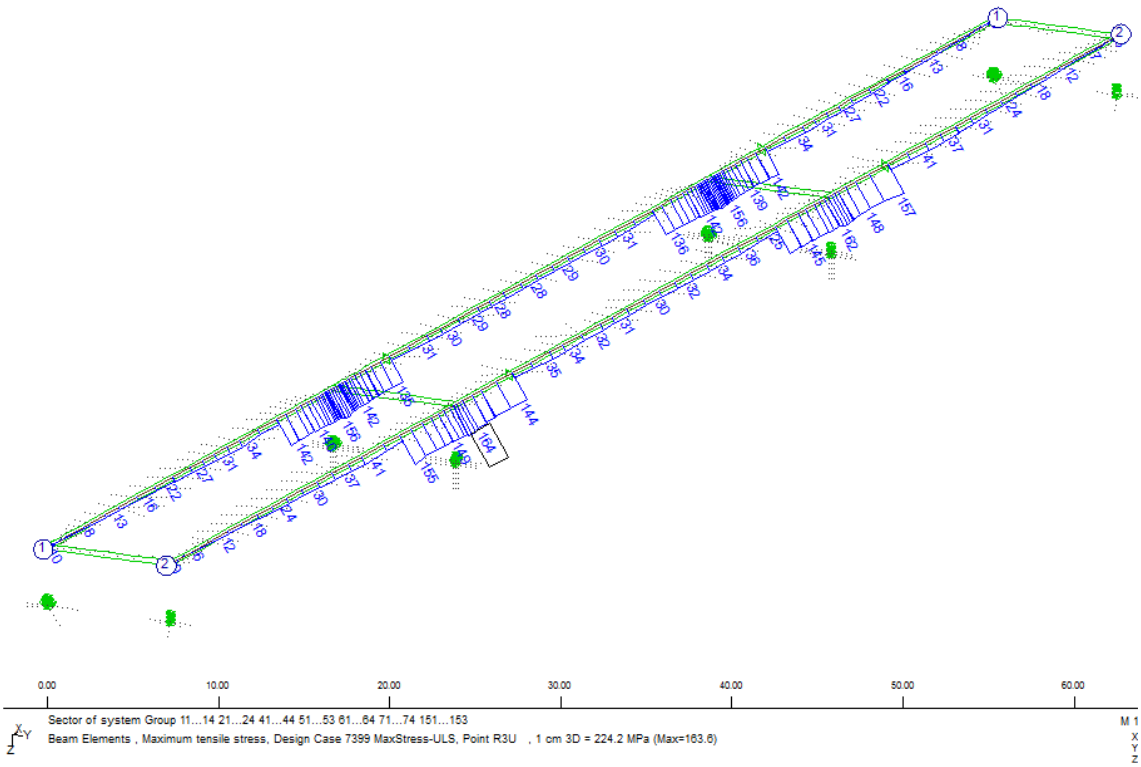

Fig. 5.35 Maximum tension stress in upper reinforcement in ULS

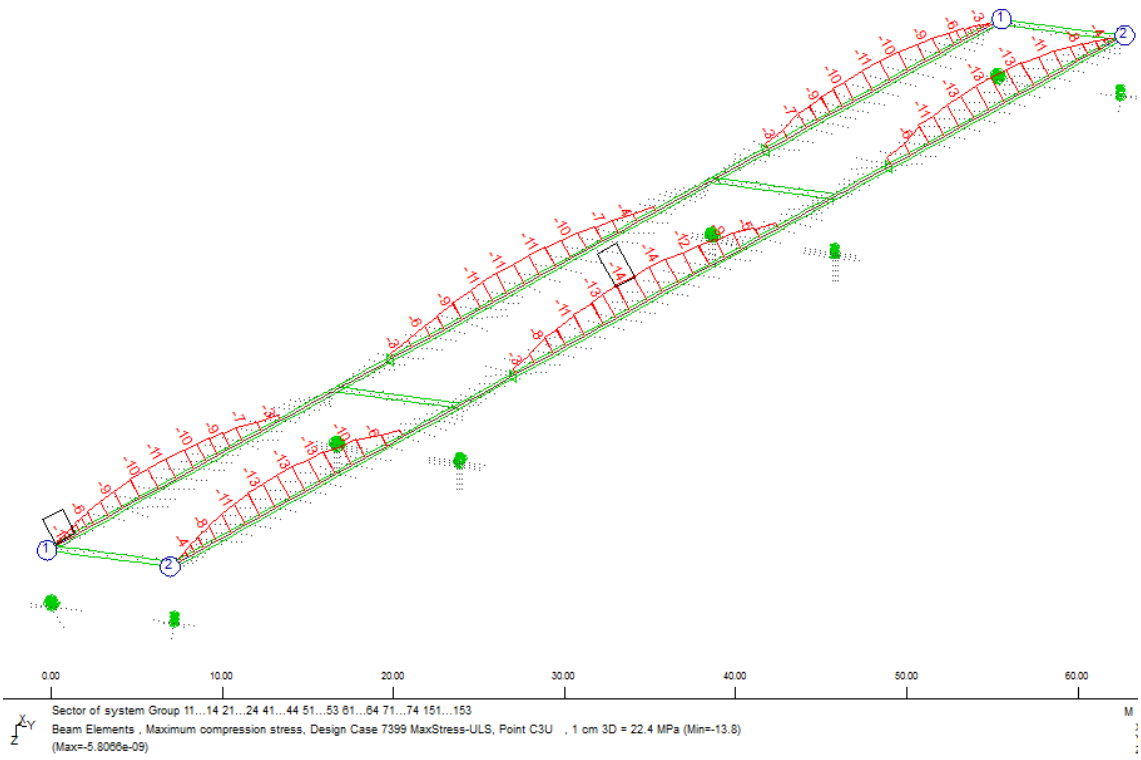

Fig. 5.36 Maximum compression stress in upper surface of in-situ concrete slab in ULS

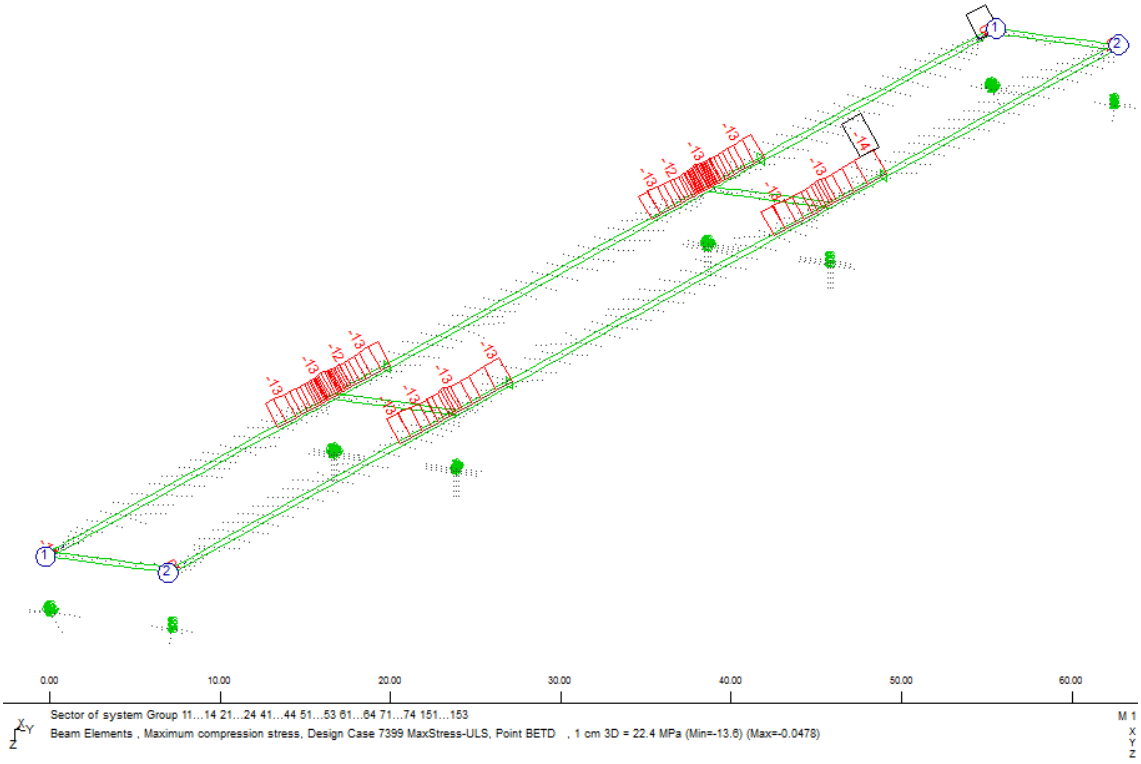

Fig. 5.37 Maximum compression stress in bottom concrete in ULS

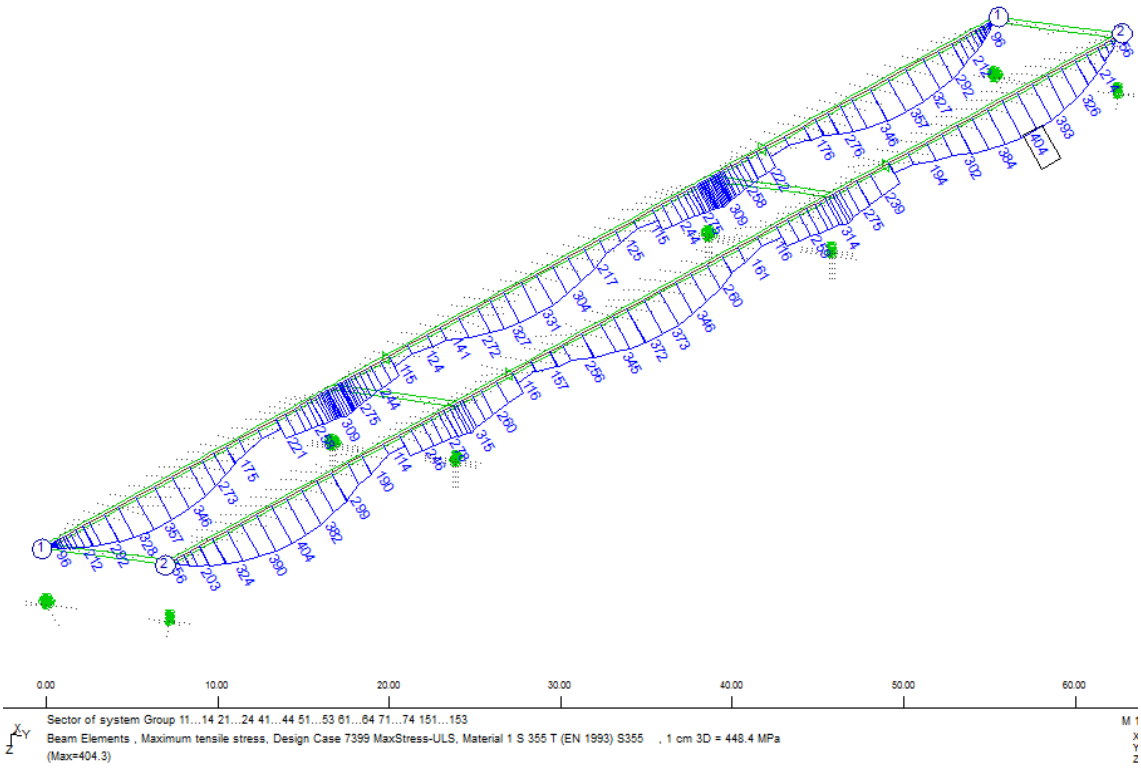

Fig. 5.38 Maximum tension stress in steel structure in ULS

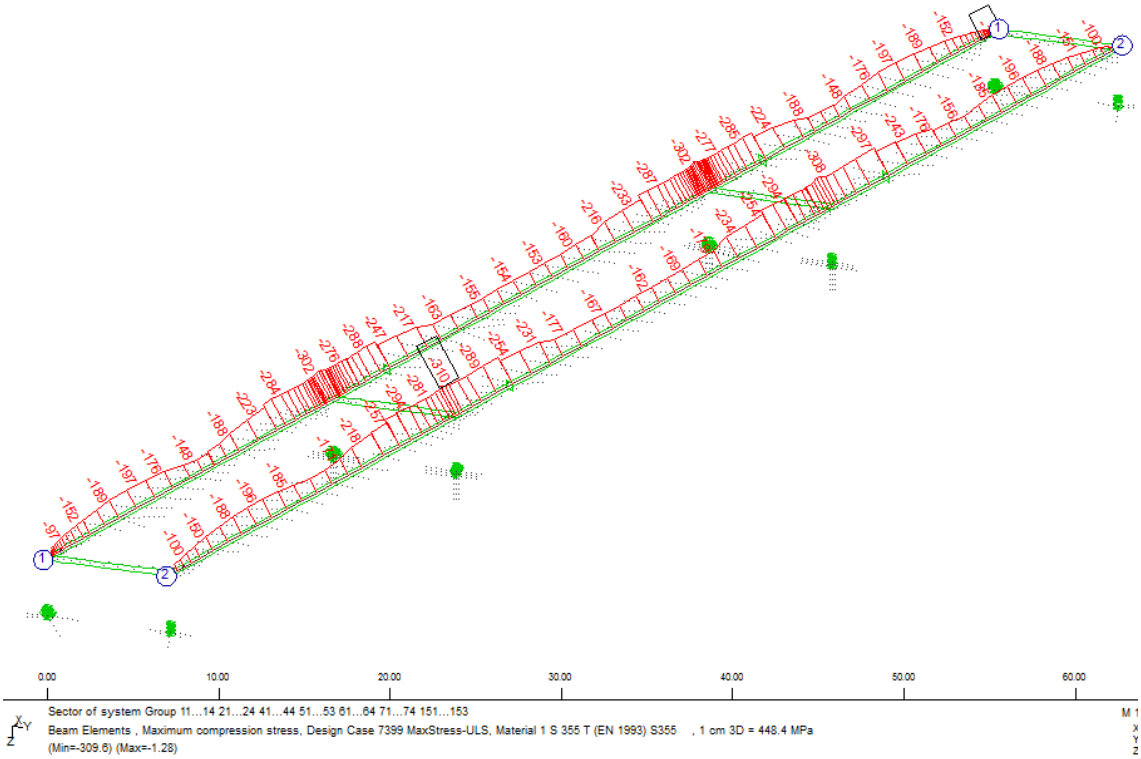

Fig. 5.39 Maximum compression stress in steel structure in ULS

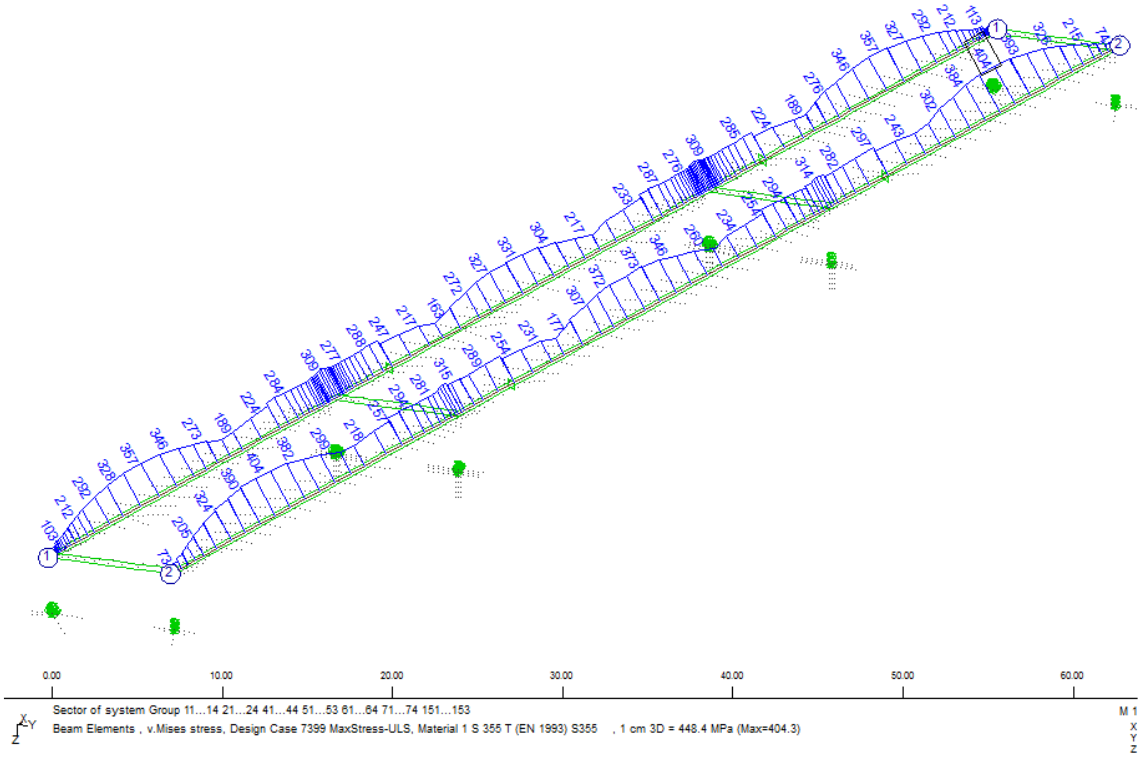

Fig. 5.40 Maximum reduced stress (H-M-H stress) in steel structure in ULS

Additional proposition of shear connection is done.

Envelope of max. transversal force in ULS (LC3103):

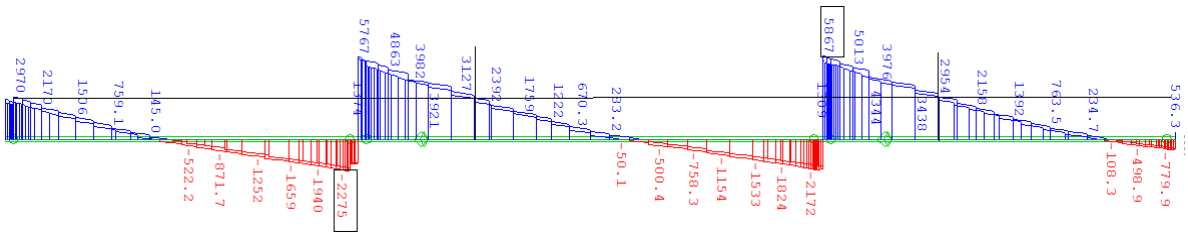

Fig. 5.41 Maximum transversal force in ULS

Max. value of transversal force to be taken for design of shear connection of section with constant height can be taken as V_1 = 3000 kN despite of technology of realisation.

ULS force for LC4027 at second support: 1889 · 1.35 = 2550; 2550 / 5767 = 0,44

1 – 0,44 = 0,54; it can be assumed that 54 % of transversal force is applied after composite action.

```
Cross section No.   154 - VFT (151)
```

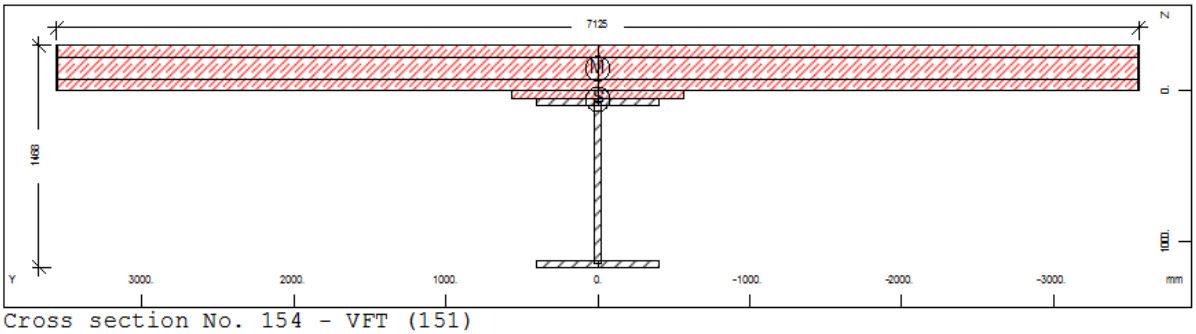


```
Cross section No. 154 - VFT (151)

Static properties of cross section
 Mat      A[cm2] Ay/Az/Ayz Iy/Iz/Iyz   ys/zs  y/z-sc   modules     gam
 NoR     It[cm4]     [cm2]     [cm4]    [mm]    [mm]   [N/mm2]   [kN/m]
   1     4815.82   3118.65 8035554.0     0.0     0.0    210000    64.97
          6270.0    471.68145603753.    56.1  -147.8     80769
```

Distance of centre of steel area from centre of inertia of composite section is 1118 / 2 + 50 – 56,1 = 553 mm.

$$\frac{S}{I} = \frac{1289 \cdot 10^{-4} \cdot 0{,}553}{8035554 \cdot 10^{-8}} = 0{,}89 \frac{1}{\text{m}}$$

$$V_L = V \cdot \frac{S}{I} = 3000 \cdot 0{,}89 = 2670 \text{ kN/m per tandem}$$

This value could be set as max. value of longitudinal shear per single beam assuming composite action since first construction step, actually lower values will be obtained because steel sections works alone for structural dead loads:

$$V_L = 0{,}54 \cdot 2670 = 1442\,\text{kN/m} \;\; \text{per tandem}$$

Longitudinal bond for “material 1(steel)” at ULS V+ (LC7303):

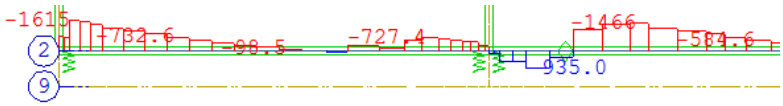

The value 1615 kN/m confirms estimated value 1442 kN/m.

Longitudinal bond for “material 30 (concrete of slab)” at ULS V+ (LC7303):

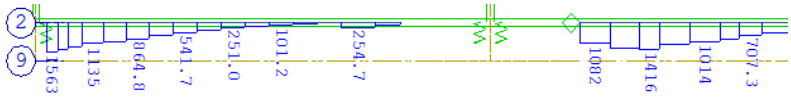

For reinforcement “material 300” values are smaller than for concrete.

Longitudinal bond for “material 25 (bottom concrete)” at ULS V+ (LC7303):

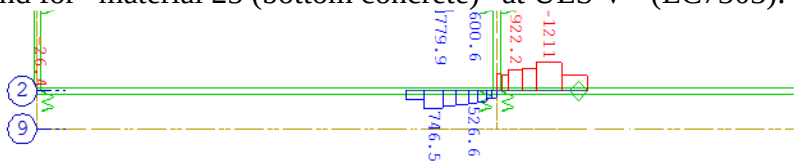

One can notice, that longitudinal shear $v_{L,Ed}$ = 1615 / 2 = 808 kN/m per single HL1100R can be taken for design of shear connection. Straight part of beam is decisive, for part with variable construction height it will be less longitudinal shearing (and inclined bottom flange takes some vertical force reducing part in the web).

808 kN/m will lead to conclusion that 9 studs/m is enough for single shape. Max. compression in slab is approx. 14 MPa at ULS. To ensure that stress in concrete slab will increase towards f_{cd} (without failure of shear connection) on can estimate 20 / 14 · 9 = 13 studs/m. 18 studs/m are needed to ensure full shear connection (calculated with assumption of failure of compressed concrete slab and with assumption of failure mechanism with plastic hinges above support and in mid-span). Assuming 2 studs spaced 0,1m one gets 20 studs/m. It results in consumption of studs 20 · 2 · 2 / 14,35 = 5,6 pcs. per m^2 of the bridge.

Hence constant spacing of studs (2 studs spaced 0,1 m per single HL1100R) is assumed for the bridge for in-situ slab.

Assuming resistance of bottom concrete block the same spacing (2 studs spaced 0,1 m per single web of HL1100R) are assumed in bottom part, constant spacing of studs is used.

This way both full shear connection assumption and fulfilment of all structural requirements are obtained. Smaller number of studs, even if sufficient from static point of view to take longitudinal shearing in elastic analysis, is not recommended.

5.4 Conclusions

It is assumed (on the basis of preliminary calculations) that no significant stability problems appear, so design can be done on the basis of stresses. Verification of section properties, ULS checks and detailed verification with different FE model (offset used, without effective width, 4 girders modelised) will be done at validation report stage.

6 WP 1.4 VALIDATION REPORT

In *Validation report* cross-checked calculations of bridge are made. Different software (Autodesk Robot Structural Analysis Professional 2016) is used and different assumptions for FE model are set. Geometry and technology of realization is the same as presented in 5.

6.1 Actions on structure

Actions are divided into groups imposed to superstructure in every particular construction stage.

- Stage 1 and 2 – steel superstructure alone is carrying all loads
  - Dead weight of steel structure (DW steel)

    Calculated automatically in FEM software on basis of cross-section area and density of steel 78,5 kN/m^3.

  - Dead weight of formworks (DW formworks)

    Uniformly distributed load with value of 0,5 kPa is assumed to cover effects of formworks and temporary bracings against lateral – torsional buckling of steel girders. This load will be applied also in stage 4, but with opposite direction (as a disassembly of formworks and bracings after casted concrete is hardened). It is assumed that formworks for entire slab may be made before lower flanges of girders are strengthened with concrete. A width of concrete slab is 14,35 m, thus load imposed to single girder is:

    $g_{k1} = 0{,}25 \cdot 14{,}35 \cdot 0{,}5 = 1{,}79\,\text{kN/m}$ per single beam in tandem

    In region, where lower flange is strengthened with concrete additional load from formworks is taken into account:

    $g_{k2} = 0{,}5 \cdot 1{,}605 \cdot 0{,}5 = 0{,}40\,\text{kN/m}$ per single beam in tandem

  - Dead weight of concrete casted as a strengthening a lower flange of steel girders in support zone regions (DW concrete (support zone))

    Concrete is to be casted on length 2x 5,00 m, its thickness is various from 0,10 m at beginning of haunch to 0,60 m at support line. Width is 1,174 m (axial spacing of girders in one tandem is 1,20 m):

$g_{k3} = 0{,}5 \cdot 0{,}1 \cdot 1{,}174 \cdot 26 = 1{,}53\,\text{kN/m}$ per single beam in tandem

$g_{k4} = 0{,}5 \cdot 0{,}6 \cdot 1{,}174 \cdot 26 = 9{,}16\,\text{kN/m}$ per single beam in tandem

- Stage 3 – steel superstructure strengthened in support zone with lower concrete chord is carrying all loads
  - Dead weight of concrete slab (DW slab)

    It is assumed that weight of wet concrete is uniformly imposed to all girders:

    $g_{k5} = 0{,}25 \cdot 4{,}389 \cdot 26 = 28{,}53\,\text{kN/m}$ per single beam in tandem

  - Removal of part of formworks (Removal of support formwork)

    At this stage concrete lower chords are already hardened and its formworks are to be removed:

    $g_{k6} = -0{,}5 \cdot 1{,}605 \cdot 0{,}5 - 0{,}5 \cdot 0{,}1 \cdot 1{,}174 \cdot (26 - 25) = -0{,}46\,\text{kN/m}$

    $g_{k7} = -0{,}5 \cdot 1{,}605 \cdot 0{,}5 - 0{,}5 \cdot 0{,}6 \cdot 1{,}174 \cdot (26 - 25) = -0{,}75\,\text{kN/m}$

    per single beam in tandem

- Stage 4 – steel – concrete composite structure is carrying all loads. All these loads can cause creeping of compressed concrete
  - Dead weight of concrete pavement (DW pavement)

    $g_{k8} = 0{,}23 \cdot 25 = 5{,}75\,\text{kPa}$

  - Dead weight of asphalt surface (including ±20 % of its height variation) (DW asphalt)

    $g_{k9} = 1{,}2 \cdot 0{,}09 \cdot 23 = 2{,}48\,\text{kPa}$

  - Dead weight of waterproof insulation (added to DW pavement and DW asphalt)

    $g_{k10} = 0{,}01 \cdot 14 = 0{,}14\,\text{kPa}$

  - Dead weight of cornice boards out of polymer concrete (DW equipment)

    $g_{k11} = 0{,}05 \cdot 0{,}60 \cdot 24 = 0{,}72\,\text{kN/m}$

- Dead weight of railings, barriers (DW equipment)

$$g_{k12} = 0{,}50\,\text{kN/m}$$

- Removal of formworks (Removal of deck formwork)

At this stage concrete slab is already hardened and its formworks are to be removed:

$$g_{k13} = -0{,}25 \cdot 14{,}35 \cdot 0{,}5 - 0{,}25 \cdot 4{,}389 \cdot (26 - 25) = -2{,}89\,\text{kN/m}$$

- Stage 5 – steel – concrete composite structure is carrying all loads

  - Creep and shrinkage of concrete deck (Shrinkage -23,5)

    It is assumed that upper surface of concrete deck is prevented from drying, temperature during hardening is of 8 °C and initial stresses are limited to approx. 10 MPa.

A_c =	**4,389**	[m^2]	Cross-sectional area
u =	**14,25**	[m]	Circumference of a part exposed to drying
RH =	**80**	[%]	Humidity
t =	**36500**	[days]	Concrete age
t_s =	**5**	[days]	Concrete age at the beginning of drying process (the day at the end of concrete care process)
t_0 =	**14**	[days]	Concrete age at the time of first loading
$T(\Delta t_i)$ =	**8**	[°C]	Avarage temperature of concrete aging t_0 (0 - 80 °C)
$\sigma_{c,SLS}$ =	**10**	[MPa]	Compressive stresses at time t_0

Concrete class:	**C 30/37**
Cement class:	**N**

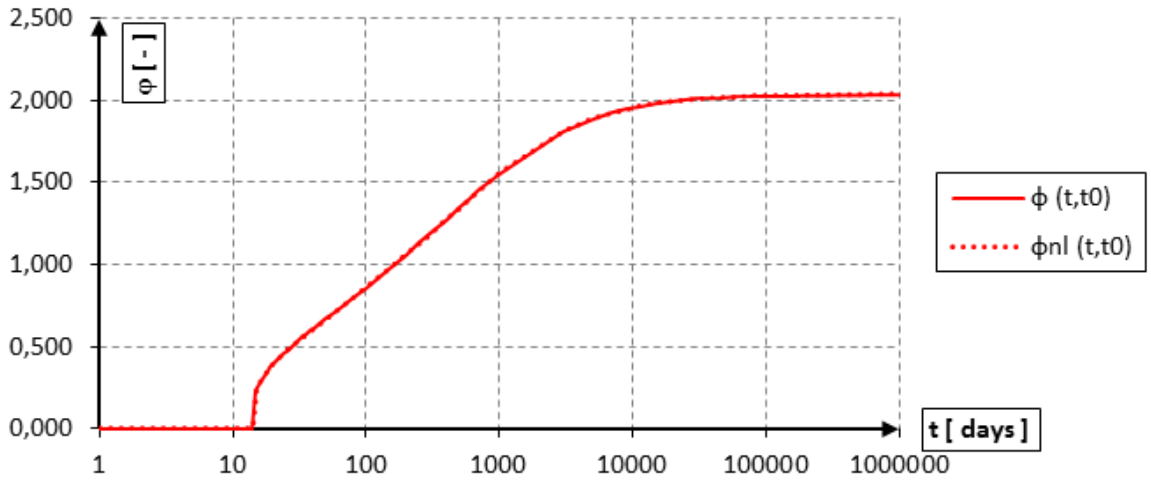

$\varphi = 2{,}014$ creep coefficient at time of 100 years

$$E_{c,eff} = \frac{E_{cm}}{1+1{,}1\cdot\varphi} = \frac{32{,}8}{1+1{,}1\cdot 2{,}014} = 10{,}2\,\text{GPa}$$

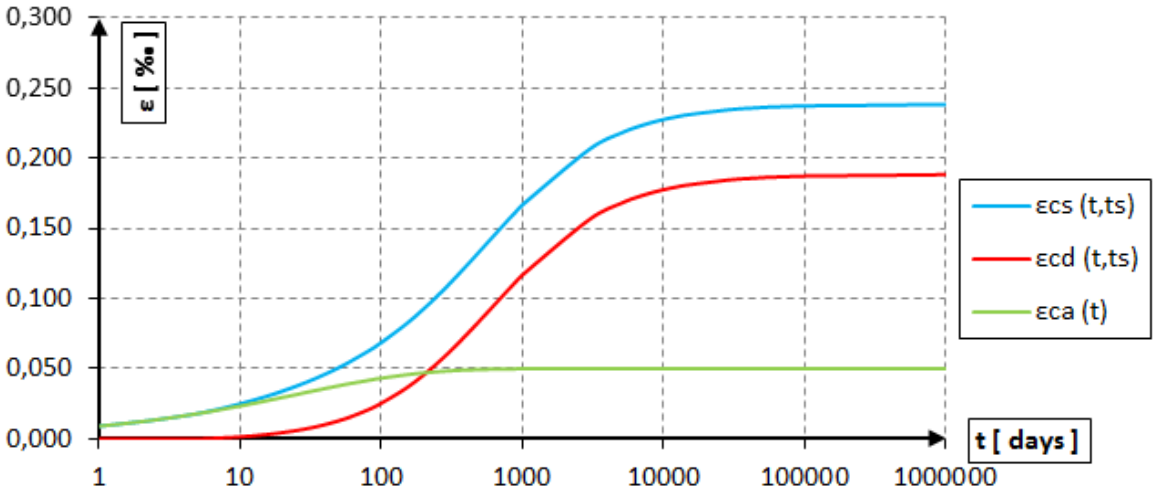

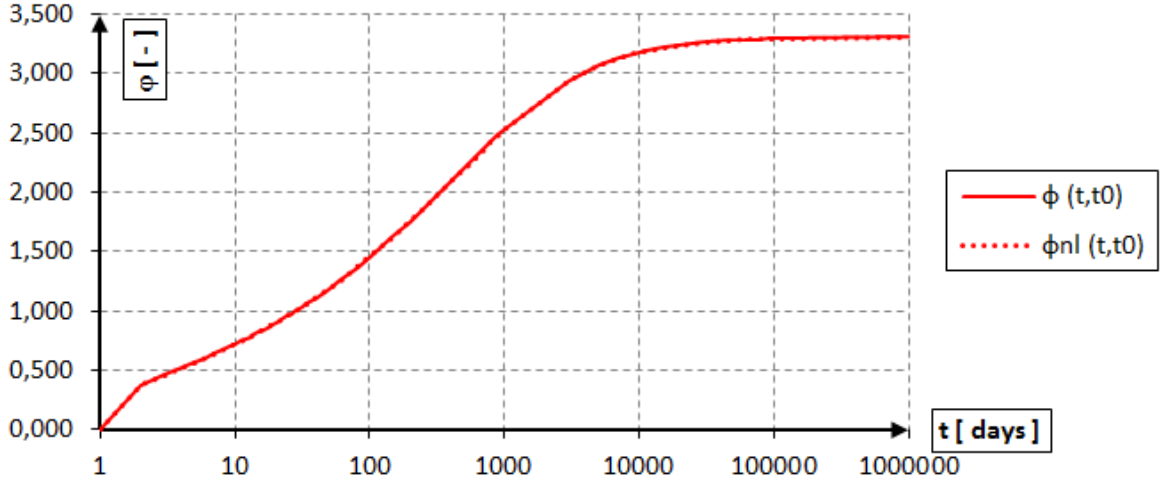

$\varepsilon_{cs} = 0{,}235 \cdot 10^{-3}$ shrinkage strains at time of 100 years

$\varphi = 3{,}272$ creep coefficient at time of 100 years correlated with shrinkage (time of loading assumed as 1 day)

$$E_{c,eff,s} = \frac{E_{cm}}{1 + 0{,}55 \cdot \varphi} = \frac{32{,}8}{1 + 0{,}55 \cdot 3{,}272} = 11{,}7\,\text{GPa}$$

- Creep and shrinkage of concrete lower chord in support regions (Shrinkage -23,5)

  It is assumed that lateral surfaces of concrete chord are prevented from drying, average thickness of concrete is assumed as 0,35 m, temperature during hardening is of 8 °C and initial stresses are limited to approx. 10 MPa.

A_c =	**4,389**	[m^2]	Cross-sectional area
u =	**14,25**	[m]	Circumference of a part exposed to drying
RH =	**80**	[%]	Humidity
t =	**36500**	[days]	Concrete age
t_s =	**5**	[days]	Concrete age at the beginning of drying process (the day at the end of concrete care process)
t_0 =	**14**	[days]	Concrete age at the time of first loading
$T(\Delta t_i)$ =	**8**	[°C]	Avarage temperature of concrete aging t_0 (0 - 80 °C)
$\sigma_{c,SLS}$ =	**10**	[MPa]	Compressive stresses at time t_0

Concrete class:	**C 30/37**
Cement class:	**N**

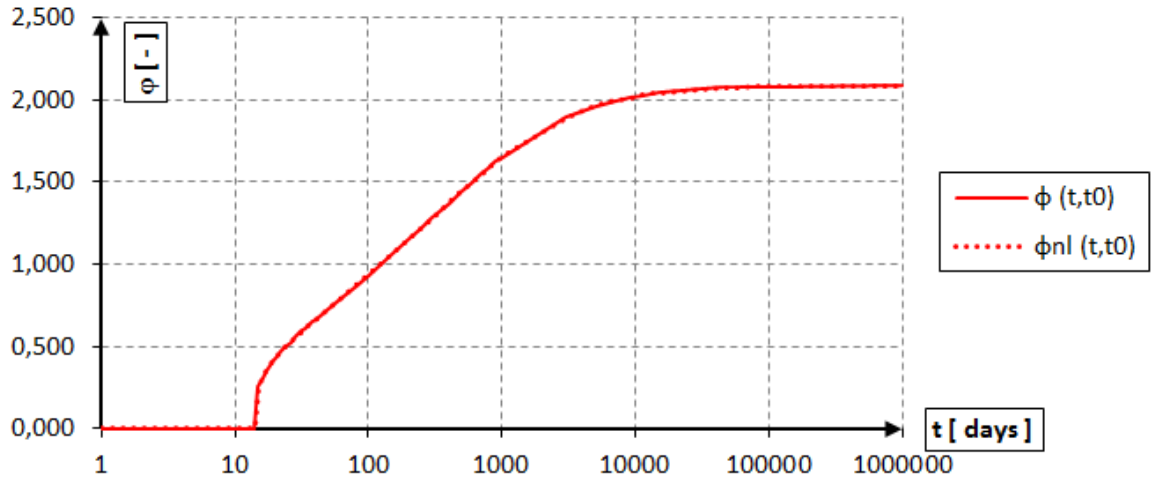

$\varphi = 2{,}069$ creep coefficient at time of 100 years

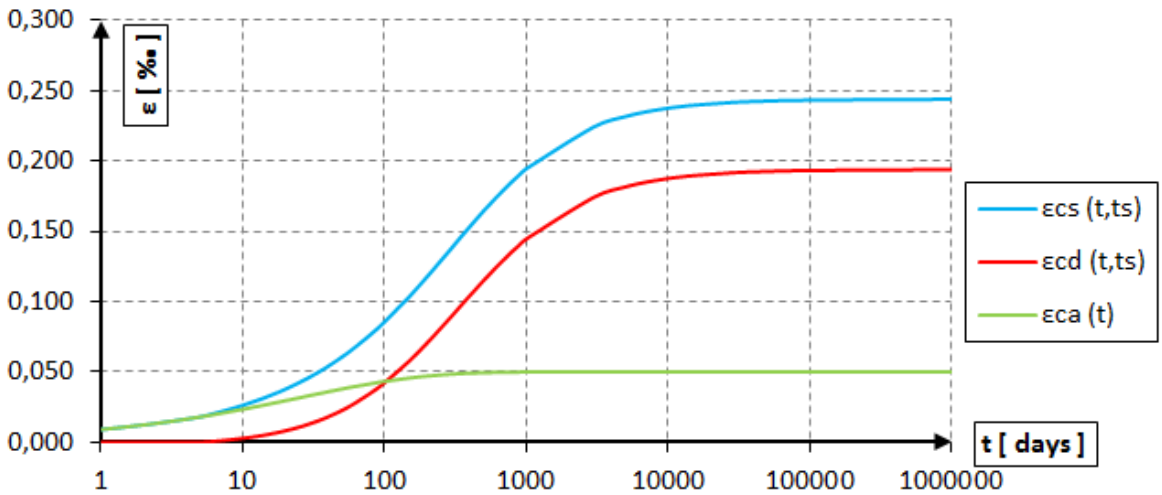

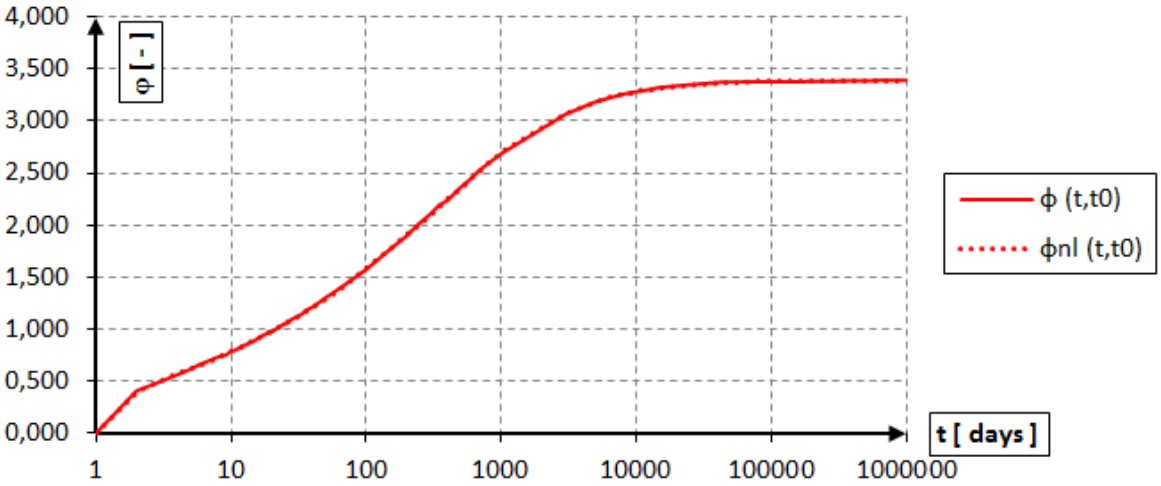

$\varepsilon_{cs} = 0{,}242 \cdot 10^{-3}$ shrinkage strains at time of 100 years

$\varphi = 3{,}362$ creep coefficient at time of 100 years correlated with shrinkage (time of loading assumed as 1 day)

$$E_{c,eff,s} = \frac{E_{cm}}{1+0{,}55\cdot\varphi} = \frac{32{,}8}{1+0{,}55\cdot 3{,}362} = 11{,}5\,\text{GPa}$$

- Thermal effects (Concrete deck +10, Concrete deck -10)

Uniform changes in temperature do not influence changes in stress state in structure, thus are omitted. Unequal thermal effects on steel structure and concrete deck are taken into account. It is assumed according to simplified procedure of EN 1991-1-5 that 2 cases are considered: concrete deck is 10 °C warmer or colder then steel girders, what is presented in Fig. 6.1.

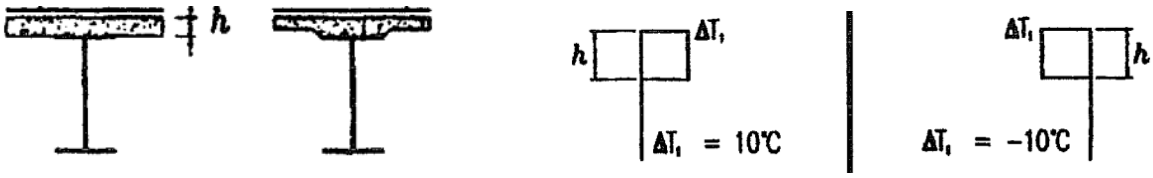

Fig. 6.1 Thermal actions on superstructure

- Variable traffic loads

Number of traffic lanes if distance between kerbs is 8,60 m:

$$n = \text{Int}\left(\frac{w}{3}\right) = \text{Int}\left(\frac{8{,}60}{3} = 2{,}87\right) = 2$$

Width of traffic lane is 3,00 m. Width of the remaining area:

$$w - 3\cdot n = 8{,}60 - 3\cdot 2 = 2{,}60\,\text{m}$$

Load model 1, 2 and 4 according to EN 1991-2 is considered. For global analysis LM 1 and reduced LM 4 is taken into account, for local deck design LM 1 and LM 2 is taken into account.

LM 1: tandem loads (TS) and uniformly distributed load (UDL)

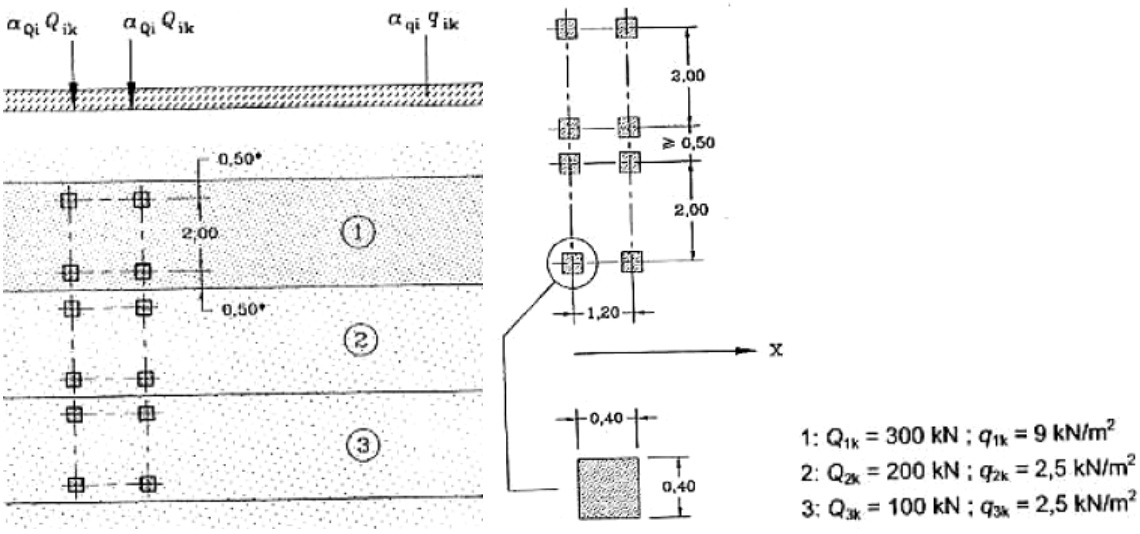

Fig. 6.2 From left: LM 1, modified LM 1 for local checks, values of Q and q loads

LM 2: single axial load

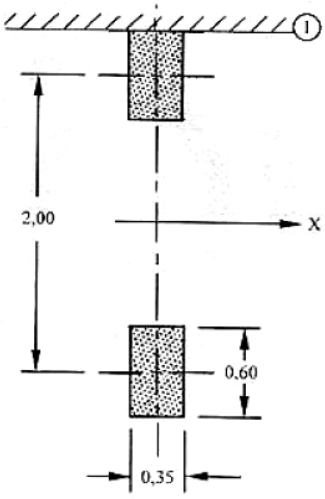

Fig. 6.3 LM 2. Axial load is 400 kN. 1 in Fig. – kerb

In areas close to extension joints additianal dynamic factor is to be taken into account. Values of this factor is presented below. In predesign calculations this factor is omitted, at stage of detailed calculation one should notice that in close-to-extension-joint areas more rebar may be needed in concrete slab.

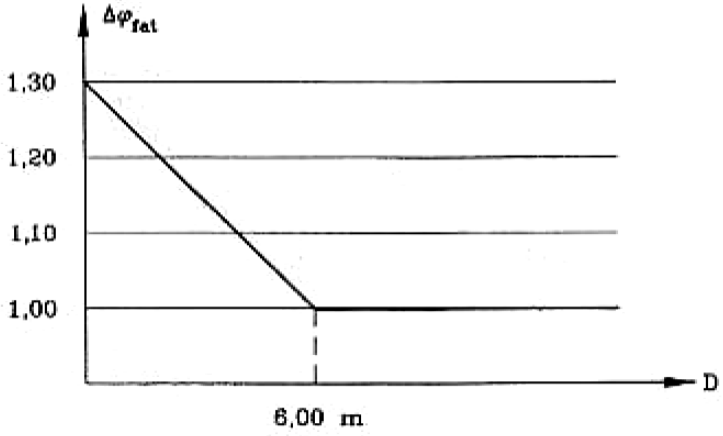

Fig. 6.4 Additional dynamic factor for local effects of LM 2 in extension joints regions

LM 4: crowd loading

Combinational value of crowd imposed loads on pavements and cycling lines is assumed as 3 kPa.

- Unequal foundation settlements (Settlement 1 – 4)

  It is assumed that maximum value of unequal foundation settlements is 0,01 m. On a safe side it is assumed that this LC is a short-term action

6.2 FE model and predesign analysis

Individual FE models are prepared taking into account construction stages – different sectional properties and different loads applied to the structure. For structure analysis in stage 1 and 2 simple e^1p^2 model can be used, as presented in Fig. 6.5.

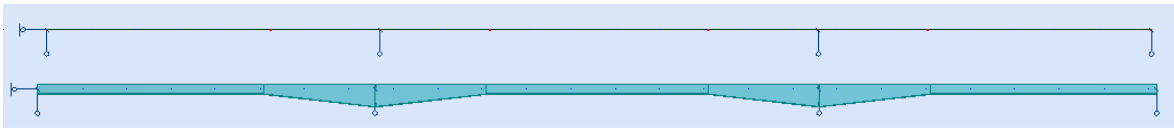

Fig. 6.5 FEM for bridge analysis – stage 1 and 2 – beam model

In stage 3 concrete lower chord is added as a strengthening of lower flange in intermediate support region. Modulus of elasticity of concrete is set as a lower value of this including creep or taking into account its inelastic behaviour and eventually cracking at stains of 3,5 ‰. This is assumption leading to simplification of FEA by taking into account concrete elastic – plastic behavior without need of changing linear to non-linear FEA. Such an approach is justified in predesign analysis giving results on a safe side.

$$E_{c,FEA} = \min\begin{cases} \dfrac{E_{cm}}{1+1{,}1\cdot\varphi} = \dfrac{32{,}8}{1+1{,}1\cdot 2{,}069} = 10{,}0 \\ \dfrac{f_{cm}}{\varepsilon_{cu3}} = \dfrac{38}{0{,}0035} = 10{,}9 \end{cases} = 10{,}0\,\text{GPa}$$

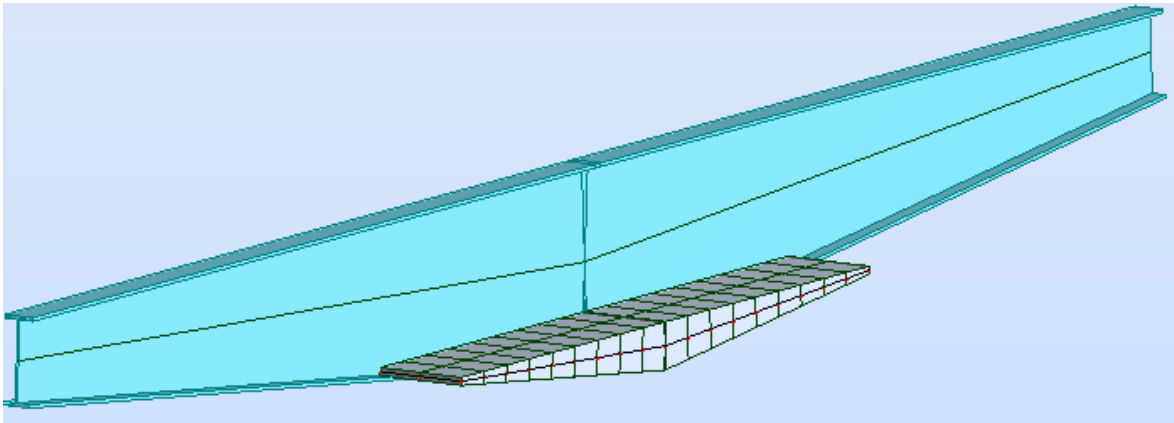

Fig. 6.6 FEM for bridge analysis – stage 3 – zoom into support zone (1 out of 2 girders visible)

In stage 4 and 5 concrete deck is already casted and hardened and all dead loads of equipment, thermal effects, settlements and traffic loads are imposed. Mean value of slab thickness is taken to FEM, calculated as:

$$t_{mean,FEM} = \frac{A_c}{b_{slab}} = \frac{4{,}389}{14{,}25} = 0{,}308\,\text{m}$$

General geometry of FEM made in class $e^{1+2}p^3$ is presented in Fig. 6.7. Model of such a class was chosen to take into account all physical phenomenon. Simpler beam model was used in 5.

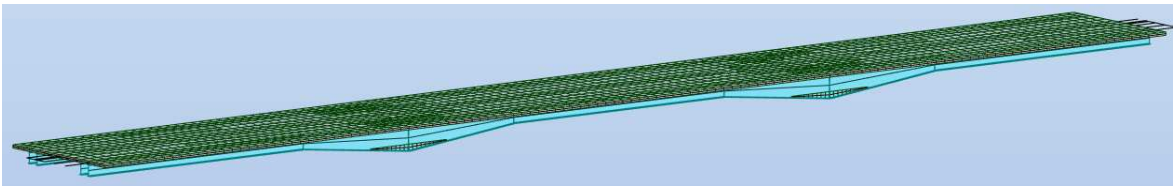

Fig. 6.7 FEM for bridge analysis – stage 4 and 5

Traffic loads should be placed only in these areas where their effects will be unfavorable. Thus influence line for transversal distribution of loads are prepared for side and middle span. Influence line for N and M for side girder of side span are shown in Fig. 6.8.

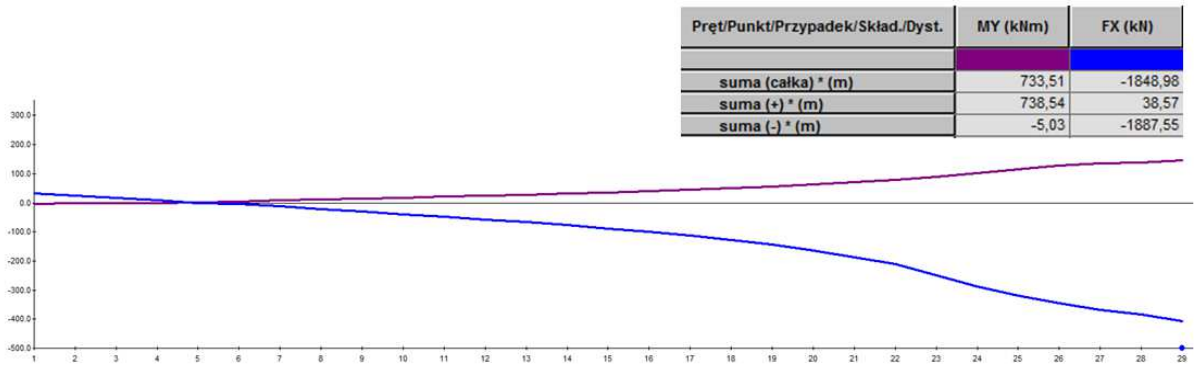

Fig. 6.8 Influence line of M and N for transversal load distribution – side girder

In can be seen that there are regions which are at minus part of influence lines, but minus values of lines are negligible – their influence on final result will be less than few percent. Entire cross-section of bridge can be loaded in predesign calculations.

According to [12] 15 % of span length adjacent to intermediate support may be assumed to have concrete deck cracked and for its stiffness calculation only longitudinal rebar is taken into account. Detailed analysis of uncracked system confirms this approach, as presented in Fig. 6.9. Below presented stresses are calculated on basis of SLS combination taking into account actions imposed after in-situ slab is casted (see Fig. 6.10: COMB. 102 and 116).

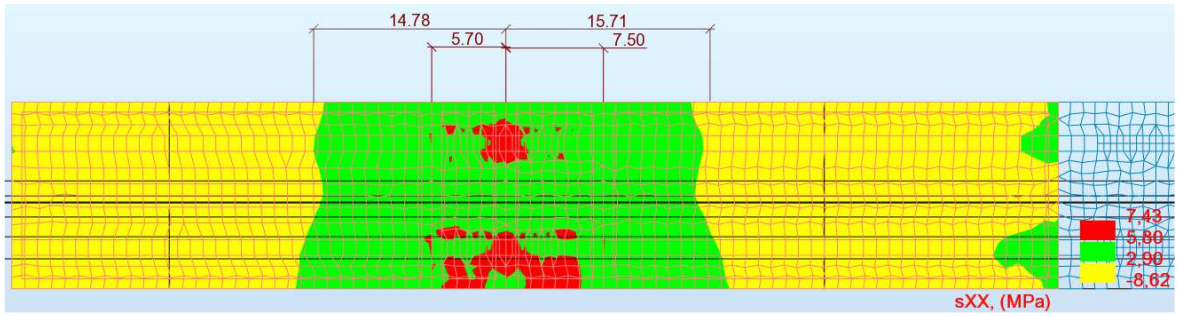

Fig. 6.9 Stresses in upper fibers of concrete deck caused by characteristic load combination (red regions present stresses bigger than 2 f_{ctm} = 5,80 MPa, green regions stresses from f_{ctm} to 2 f_{ctm})

1	DW steel
2	DW pavements
3	DW asphalt
4	DW equipment
5	Removal of deck formwork
6	Settlement 1
7	Settlement 2
8	Settlement 3
9	Settlement 4
10	Concrete deck +10
11	Concrete deck -10
12	Shrinkage -23,5
13	UDL - Span 1L
14	UDL - Span 1P
15	UDL - Span 2L
16	UDL - Span 2P
17	UDL - Span 3L
18	UDL - Span 3P
19	TS
20	Single Axial Load 400
21	Crowd load - Span 1
22	Crowd load - Span 2
23	Crowd load - Span 3

102 (K)	COMB 1 - cracked zone	(2+3+4+5+6+8+13+15+19+21+22)*1.00+11*0.60+12*0.36
116 (K)	COMB 2 - cracked zone	(2+3+4+5+6+8+14+16+19+21+22)*1.00+11*0.60+12*0.36
117 (K)	COMB 1 - rebar	(2+3+4+5+6+8+13+15+19+21+22)*1.35+11*0.90+12*0.49
135 (K)	COMB 2 -rebar	(2+3+4+5+6+8+14+16+19+21+22)*1.35+11*0.90+12*0.49

Fig. 6.10 Load cases and combinations in SLS for cracked zone analysis and ULS for rebar predesign

Amount of rebar in support region needed to cracked concrete stiffness determination is calculated using an uncracked section properties on basis of longitudinal forces in the deck (load combinations analogical to presented in Fig. 6.10, but with load factors: COMB. 117 and 135).

Fig. 6.11 Axial forces in concrete slab in ULS combination

$$A_{s,req} = \frac{N}{f_{sd}} = \frac{2{,}28}{500/1{,}15} = 0{,}0052\,\mathrm{m}^2/\mathrm{m}$$

Rebar #20 cc. 100 in 2 layers is assumed with area of 20x 3,14 = 62,8 cm^2/m. Stresses in SLS are estimated to 266 MPa, what is assumed to be acceptable level to fulfill requirements for crack width limitations to 0,2 mm.

$$\sigma_{SLS} \approx \frac{A_{s,req}}{A_{s,prov}} \cdot \frac{f_{sd}}{\gamma_F} \approx \frac{52}{63} \cdot \frac{435}{1{,}35} \approx 266\,\text{MPa} \approx 240\,\text{MPa}$$

Slightly exceeded SLS stresses in reinforcement are accepted at this stage (predesign analysis) taking into account their further reduction caused by decrease of support bending moment (decrease of bending stiffness caused by cracking of concrete).

Axial stiffness of concrete deck in cracked regions is reduced taking into account only reinforcement. In FEM model E_{cm} is reduced to value:

$$E_{x,cm,red} = \frac{A_s \cdot E_a}{h \cdot E_{cm}} \cdot E_{cm} = 4{,}08\,\text{GPa}$$

Bending and shear stiffness of concrete deck in FEM remains constant irrespective of cracked or uncracked conditions.

6.3 Static calculations and dimensioning

6.3.1 Stage 1 + 2

For predesign calculations it can be assumed that steel structure is already assembled. Earlier stages necessary to assembly all steel structure from single elements can be omitted in calculations because temporary supports needed to assembly are located close to 0 bending moments regions. Precise analysis including steel structure assembly stages will prove negligible differences in stress state.

Definition of single load cases and their combinations considered in FEA:

1	DW steel
2	DW formworks
3	DW concrete (support zone)

4 (K)	COMB 1	(1+2+3)*1.00
5 (K)	COMB 2	(1+2+3)*1.35

Fig. 6.12 Load cases and combinations

Checking a class of cross-section:

- for compressive flange:

$$\frac{c}{t} = \frac{170}{45} = 3{,}78 < 9 \cdot \varepsilon = 6{,}39 \qquad \text{- class 1}$$

- for bended web:

$$\frac{c}{t} = \frac{988}{26} = 38{,}0 < 72 \cdot \varepsilon = 51{,}1 \qquad \text{- class 1 (mid-span region)}$$

$$\frac{c}{t} = \frac{2370}{26} = 91{,}2 > 124 \cdot \varepsilon = 88{,}0 \qquad \text{- class 4 (intermediate support zone region)}$$

Internal forces envelopes (if class < 3 had been obtained then direct stress analysis could be possible):

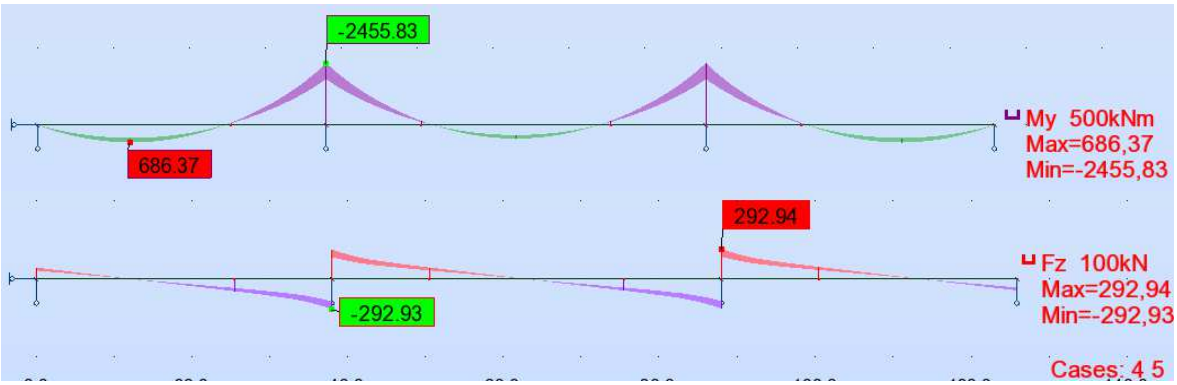

Fig. 6.13 Envelope of bending moments and shear forces in stage 1 + 2

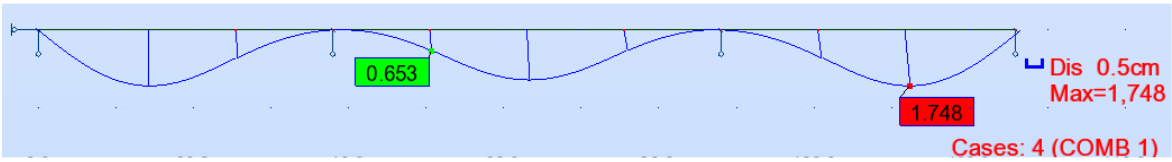

Fig. 6.14 Deformation in stage 1 + 2

Dimensioning is made according to [9] for support zone cross-sections and according to [8] for mid-span cross-sections. Simple calculations can prove that increase of stresses caused by local buckling of web in class 4 is less than 2,0 % for compressed flange and 0,0 % for flange under tension.

t_{f1} =	45	[mm]
b_{f1} =	405	[mm]
t_w =	26	[mm]
h_w =	2410	[mm]
t_{f2} =	45	[mm]
b_{f2} =	405	[mm]
t_s =	20	[mm]
b_s =	185	[mm]
r, a_w =	20	[mm]
a =	12500	[mm]

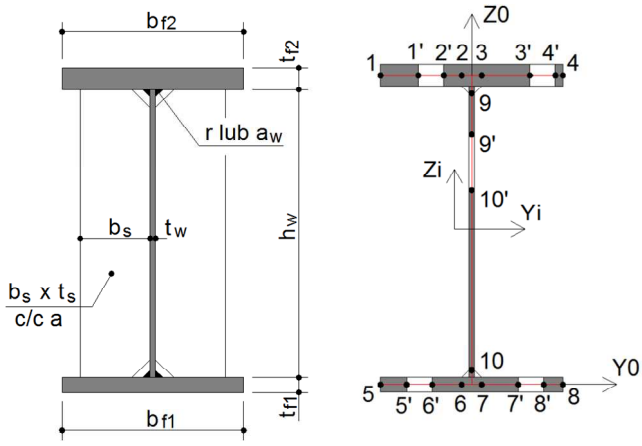

L_e =	25000	[mm]	Spacing of 0 bending moments points

Steel grade: **S 460**
Support stiffener: **non-rigid**

$M_{Ed.,y}$ =	2455,8	[kNm]
$V_{Ed.}$ =	292,9	[kN]

$\sigma_{cr,c}$ =	0,8	[MPa]	Critical stresses for column type buckling of web
$\bar{\lambda}_c$ =	23,668	[-]	Relative column slanderness
Φ =	283,059	[-]	Buckling parameters
χ_c =	0,002	[-]	Buckling coefficient for column type buckling of web
σ_E =	22,1	[MPa]	
$k\sigma_p$ =	23,920	[-]	Buckling factor
$\sigma_{cr,p}$ =	528,4	[MPa]	Critical stresses for plate type buckling of web
ξ =	1,000	[-]	

Stress calculation in iterations 1 - 10

σ_1 =	35,4	35,9	36,0	36,0	36,0	36,0	**36,0**
σ_2 =	35,4	35,9	36,0	36,0	36,0	36,0	**36,0**
σ_3 =	35,4	35,9	36,0	36,0	36,0	36,0	**36,0**
σ_4 =	35,4	35,9	36,0	36,0	36,0	36,0	**36,0**
σ_5 =	-35,4	-35,4	-35,4	-35,4	-35,4	-35,4	**-35,4**
σ_6 =	-35,4	-35,4	-35,4	-35,4	-35,4	-35,4	**-35,4**
σ_7 =	-35,4	-35,4	-35,4	-35,4	-35,4	-35,4	**-35,4**
σ_8 =	-35,4	-35,4	-35,4	-35,4	-35,4	-35,4	**-35,4**
σ_9 =	34,1	34,7	34,8	34,8	34,8	34,8	**34,8**
σ_{10} =	-34,1	-34,1	-34,1	-34,1	-34,1	-34,1	**-34,1**

A_{eff} =	**9,75E+04**	[mm^2]	Effective cross-sectional area
$e_{a,y}$ =	**11,6**	[mm]	Shifting of neutral axis in z direction
$I_{eff,y}$ =	**8,44E+10**	[mm^4]	Effective cross-sectional 2nd moment of inertia around y-axis
$y_{a,z}$ =	**0,0**	[mm]	Shifting of neutral axis in y direction
$I_{eff,z}$ =	**5,02E+08**	[mm^4]	Effective cross-sectional 2nd moment of inertia around z-axis

Stresses in top and bottom flanges calculated at external fibers of cross-section, not in central plane of flanges as recommended in [9]:

- for intermediate support zone:

$$\sigma_{TOP} = \frac{M \cdot z_{TOP}}{I_{eff,y}} = \frac{-2456 \cdot (1{,}25 - 0{,}012)}{0{,}0844} = -36{,}0\,\text{MPa}$$

$$\sigma_{BOTTOM} = \frac{M \cdot z_{BOTTOM}}{I_{eff,y}} = \frac{-2456 \cdot (-1{,}25 - 0{,}012)}{0{,}0844} = 36{,}7\,\text{MPa}$$

- for mid-span regions of side span:

$$\sigma_{TOP} = \frac{M \cdot z}{I_y} = \frac{686 \cdot 0{,}559}{0{,}0129} = 29{,}7\,\text{MPa}$$

$$\sigma_{BOTTOM} = \frac{M \cdot z}{I_y} = \frac{686 \cdot (-0{,}559)}{0{,}0129} = -29{,}7\,\text{MPa}$$

- for mid-span regions of middle span:

$$\sigma_{TOP} = \frac{M \cdot z}{I_y} = \frac{535 \cdot 0{,}559}{0{,}0129} = 23{,}1\,\text{MPa}$$

$$\sigma_{BOTTOM} = \frac{M \cdot z}{I_y} = \frac{535 \cdot (-0{,}559)}{0{,}0129} = -23{,}1\,\text{MPa}$$

6.3.1 Stage 3

Definition of single load cases and their combinations considered in FEA:

2	DW concrete (slab)
3	Removal of support formwork

4 (K)	COMB 1	(2+3)*1.00
5 (K)	COMB 2	(2+3)*1.35

Fig. 6.15 Load cases and combinations

Internal forces in beams and normal stresses in concrete envelope:

Fig. 6.16 Envelope of internal forces in steel beam and stresses in concrete in stage 3

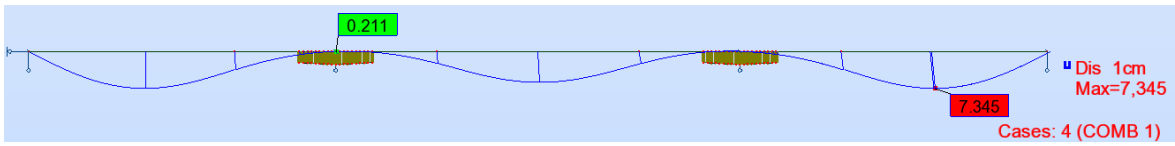

Fig. 6.17 Deformation in stage 3

Checking a class of cross-section for web in intermediate support zone region:

$$\sigma_{TOP} = \frac{N}{A} + \frac{M \cdot z}{I_y} = \frac{-1220}{0{,}0995} + \frac{-8625 \cdot 1{,}25}{0{,}0858} = -12{,}3 - 125{,}7 = -138{,}0\,\text{MPa}$$

$$\sigma_{BOTTOM} = \frac{N}{A} + \frac{M \cdot z}{I_y} = \frac{-1220}{0{,}0995} + \frac{-8625 \cdot (-1{,}25)}{0{,}0858} = -12{,}3 + 125{,}7 = 113{,}5\,\text{MPa}$$

It is assumed that web panel has height of 1940 – is limited with horizontal row of studs welded to web at level 500 over bottom external fibers and with radius of connection with upper flange. Edge stresses in considered panel are:

$$\sigma_{500} = 113{,}5 + (-138{,}0 - 113{,}5)\frac{0{,}5}{2{,}5} = 63{,}2\,\text{MPa}$$

$$\sigma_{2435} = 113{,}5 + (-138{,}0 - 113{,}5)\frac{2{,}435}{2{,}5} = -131{,}5\,\text{MPa}$$

$$\psi = \frac{\sigma_{2435}}{\sigma_{500}} = \frac{-131{,}5}{63{,}2} = -2{,}081$$

$$\frac{c}{t} = \frac{1940}{26} = 74{,}6 < 62 \cdot \varepsilon \cdot (1-\psi) \cdot \sqrt{(-\psi)} = 197{,}0 \qquad \text{- class} \leq 3$$

Concrete lower chord prevents web against local buckling.

Dimensioning is made according to [8] for all sections.

- for intermediate support zone:

$$\sigma_{TOP} = \frac{N}{A} + \frac{M \cdot z}{I_y} = \frac{-1220}{0{,}0995} + \frac{-8625 \cdot 1{,}25}{0{,}0858} = -12{,}3 - 125{,}7 = -138{,}0\,\text{MPa}$$

$$\sigma_{BOTTOM} = \frac{N}{A} + \frac{M \cdot z}{I_y} = \frac{-1220}{0{,}0995} + \frac{-8625 \cdot (-1{,}25)}{0{,}0858} = -12{,}3 + 125{,}7 = 113{,}5\,\text{MPa}$$

$$\sigma_C = 5{,}6\,\text{MPa}$$

- for mid-span regions of side span:

$$\sigma_{TOP} = \frac{M \cdot z}{I_y} = \frac{2902 \cdot 0{,}559}{0{,}0129} = 125{,}5\,\text{MPa}$$

$$\sigma_{BOTTOM} = \frac{M \cdot z}{I_y} = \frac{2902 \cdot (-0{,}559)}{0{,}0129} = -125{,}5\,\text{MPa}$$

- for mid-span regions of middle span:

$$\sigma_{TOP} = \frac{M \cdot z}{I_y} = \frac{2205 \cdot 0{,}559}{0{,}0129} = 95{,}6\,\text{MPa}$$

$$\sigma_{BOTTOM} = \frac{M \cdot z}{I_y} = \frac{2205 \cdot (-0{,}559)}{0{,}0129} = -95{,}6\,\text{MPa}$$

6.3.2 Stage 4

Definition of single load cases and their combinations considered in FEA:

2	DW pavements
3	DW asphalt
4	DW equipment
5	Removal of deck formwork
6	Settlement 1
7	Settlement 2
8	Settlement 3
9	Settlement 4

45 (K)	COMB 1 ULS	(2+3+4+5)*1.00
46 (K)	COMB 2 ULS	(2+3+4+5+6+8)*1.35
47 (K)	COMB 3 ULS	(2+3+4+5+7+9)*1.35
48 (K)	COMB 4 SLS	(2+3+4+5+6+8)*1.00
49 (K)	COMB 5 SLS	(2+3+4+5+7+9)*1.00

Fig. 6.18 Load cases and combinations

Internal forces in beams and normal stresses / axial force in concrete envelope at t = 0 (beginning of exploitation):

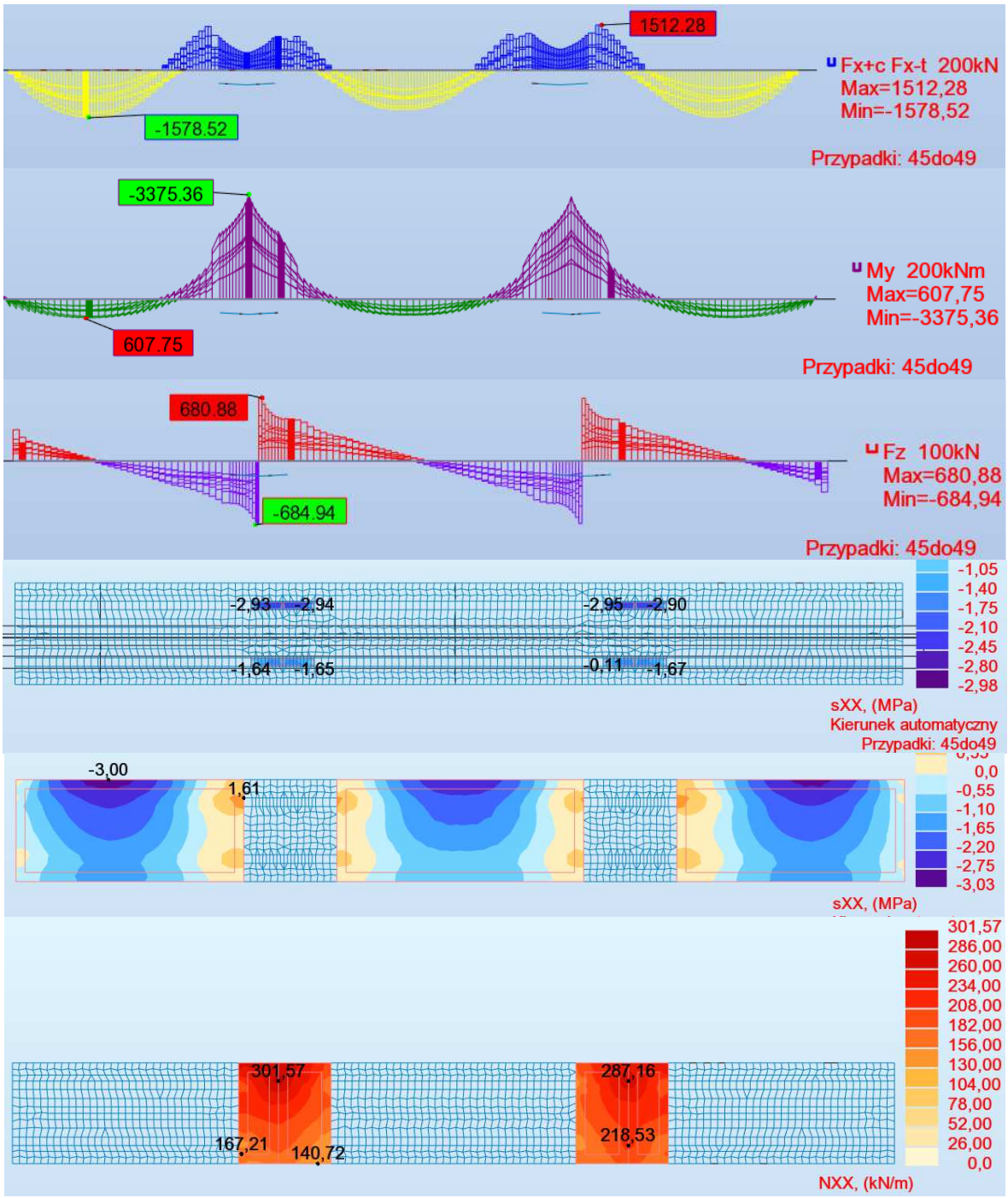

Fig. 6.19 Envelope of internal forces in steel beam and stresses/ axial forces in concrete in stage 4

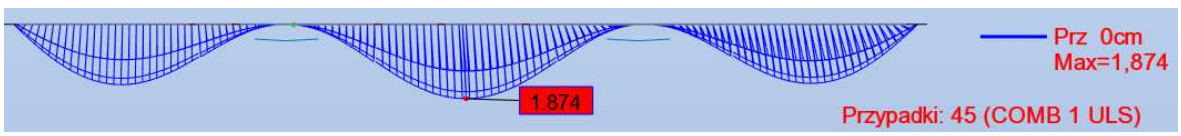

Fig. 6.20 Deformation in stage 4

Internal forces in beams and normal stresses / axial force in concrete envelope at t = 100 years (assumed exploitation period – creep with final values):

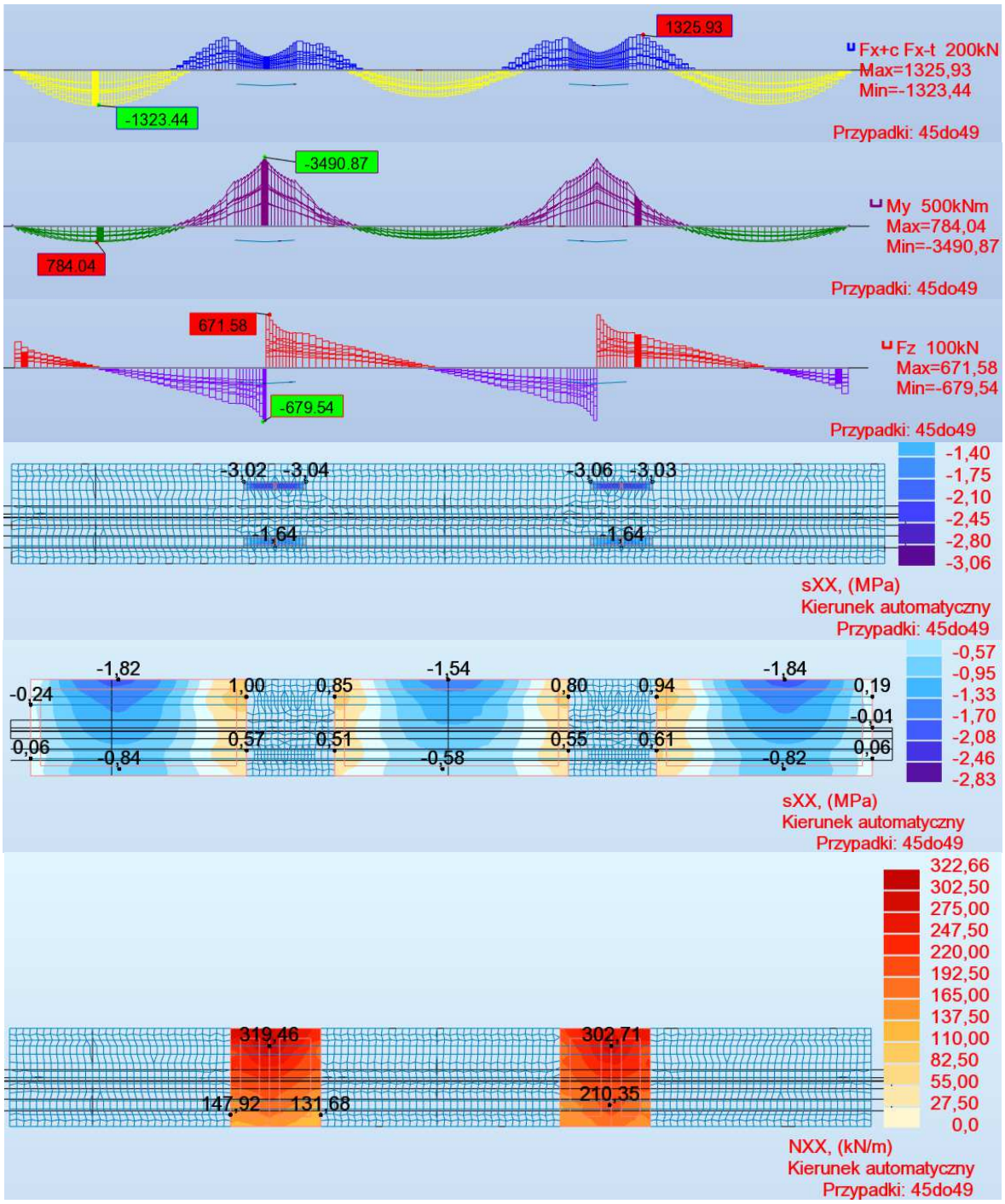

Fig. 6.21 Envelope of internal forces in steel beam and stresses / axial forces in concrete in stage 4

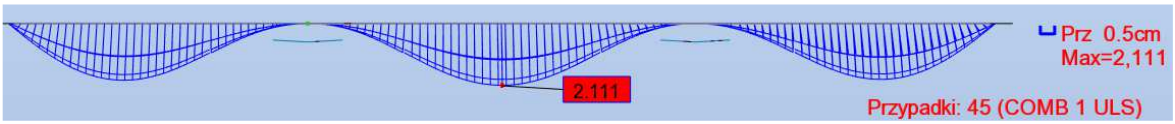

Fig. 6.22 Deformation in stage 4

Checking a class of cross-section for web in intermediate support zone region for the most stresses girder (internal forces at time t = 0 taken into account, influence of creep in span zone has minor influence on changes in stress distribution at support zone, but only on their values):

$$\sigma_{TOP} = \frac{N}{A} + \frac{M \cdot z}{I_y} = \frac{584}{0{,}0995} + \frac{-3375 \cdot 1{,}25}{0{,}0858} = 5{,}9 - 49{,}2 = -43{,}3\,\text{MPa}$$

$$\sigma_{BOTTOM} = \frac{N}{A} + \frac{M \cdot z}{I_y} = \frac{584}{0{,}0995} + \frac{-3375 \cdot (-1{,}25)}{0{,}0858} = 5{,}9 + 49{,}2 = 55{,}0\,\text{MPa}$$

It is assumed that web panel has height of 1940 – is limited with horizontal row of studs welded to web at level 500 over bottom external fibers and with radius of connection with upper flange. Edge stresses in considered panel are:

$$\sigma_{500} = 35{,}4\,\text{MPa}$$

$$\sigma_{2435} = -40{,}7\,\text{MPa}$$

$$\psi = \frac{\sigma_{2435}}{\sigma_{500}} = \frac{-40{,}7}{35{,}4} = -1{,}150$$

$$\frac{c}{t} = \frac{1940}{26} = 74{,}6 < 62 \cdot \varepsilon \cdot (1-\psi) \cdot \sqrt{(-\psi)} = 102{,}1 \qquad \text{- class} \le 3$$

Concrete lower chord prevents web against local buckling.

Dimensioning is made according to [8] for all sections.

- for intermediate support zone – time t = 0:

	N [kN]	M [kNm]	A [m^2]	IY [m^4]	zTOP [m]	zBOTTOM [m]	sig TOP [MPa]	sig BOTTOM [MPa]
Girder 1	584	-3375	0,0995	0,0858	1,25	-1,25	**-43,3**	**55,0**
Girder 2	454	-2901	0,0995	0,0858	1,25	-1,25	**-37,7**	**46,8**
Girder 3	91	-2011	0,0995	0,0858	1,25	-1,25	**-28,4**	**30,2**
Girder 4	278	-2174	0,0995	0,0858	1,25	-1,25	**-28,9**	**34,5**

$$\sigma_{C,BOTTOM} = 3{,}0\,\text{MPa}$$

$$\sigma_{A,MAX} = \frac{N}{A} = \frac{0{,}302}{0{,}00628} = 48{,}1\,\text{MPa}$$

- for mid-span regions of side span – time t = 0:

	N [kN]	M [kNm]	A [m^2]	IY [m^4]	zTOP [m]	zBOTTOM [m]	sig TOP [MPa]	sig BOTTOM [MPa]
Girder 1	-1579	608	0,0635	0,0129	0,559	-0,559	**1,5**	**-51,2**
Girder 2	-1441	561	0,0635	0,0129	0,559	-0,559	**1,6**	**-47,0**
Girder 3	-1033	385	0,0635	0,0129	0,559	-0,559	**0,4**	**-33,0**
Girder 4	-1032	377	0,0635	0,0129	0,559	-0,559	**0,1**	**-32,6**

$$\sigma_{C,TOP,1} = 3{,}0\,\text{MPa}$$

- for mid-span regions of middle span – time t = 0:

	N [kN]	M [kNm]	A [m^2]	IY [m^4]	zTOP [m]	zBOTTOM [m]	sig TOP [MPa]	sig BOTTOM [MPa]
Girder 1	-1313	520	0,0635	0,0129	0,559	-0,559	**1,9**	**-43,2**
Girder 2	-1213	483	0,0635	0,0129	0,559	-0,559	**1,8**	**-40,0**
Girder 3	-905	331	0,0635	0,0129	0,559	-0,559	**0,1**	**-28,6**
Girder 4	-898	319	0,0635	0,0129	0,559	-0,559	**-0,3**	**-28,0**

$$\sigma_{C,TOP,2} = 2{,}6\,\text{MPa}$$

- for intermediate support zone – time t = 100 years:

	N [kN]	M [kNm]	A [m^2]	IY [m^4]	zTOP [m]	zBOTTOM [m]	sig TOP [MPa]	sig BOTTOM [MPa]
Girder 1	501	-3491	0,0995	0,0858	1,25	-1,25	**-45,8**	**55,9**
Girder 2	425	-3031	0,0995	0,0858	1,25	-1,25	**-39,9**	**48,4**
Girder 3	141	-1980	0,0995	0,0858	1,25	-1,25	**-27,4**	**30,3**
Girder 4	364	-2113	0,0995	0,0858	1,25	-1,25	**-27,1**	**34,4**

$$\sigma_{C,BOTTOM} = 3{,}1\,\text{MPa}$$

$$\sigma_{A,MAX} = \frac{N}{A} = \frac{0{,}319}{0{,}00628} = 50{,}8\,\text{MPa}$$

- for mid-span regions of side span – time t = 100 years:

	N [kN]	M [kNm]	A [m^2]	IY [m^4]	zTOP [m]	zBOTTOM [m]	sig TOP [MPa]	sig BOTTOM [MPa]
Girder 1	-1323	784	0,0635	0,0129	0,559	-0,559	**13,1**	**-54,8**
Girder 2	-1180	726	0,0635	0,0129	0,559	-0,559	**12,9**	**-50,0**
Girder 3	-800	489	0,0635	0,0129	0,559	-0,559	**8,6**	**-33,8**
Girder 4	-804	471	0,0635	0,0129	0,559	-0,559	**7,7**	**-33,1**

$\sigma_{C,TOP,1} = 1{,}8\,\text{MPa}$

- for mid-span regions of middle span – time t = 100 years:

	N [kN]	M [kNm]	A [m^2]	IY [m^4]	zTOP [m]	zBOTTOM [m]	sig TOP [MPa]	sig BOTTOM [MPa]
Girder 1	-1002	636	0,0635	0,0129	0,559	-0,559	**11,8**	**-43,3**
Girder 2	-908	588	0,0635	0,0129	0,559	-0,559	**11,2**	**-39,8**
Girder 3	-673	387	0,0635	0,0129	0,559	-0,559	**6,2**	**-27,4**
Girder 4	-673	366	0,0635	0,0129	0,559	-0,559	**5,3**	**-26,5**

$\sigma_{C,TOP,2} = 1{,}5\,\text{MPa}$

6.3.3 Stage 5

Definition of single load cases and their combinations considered in FEA:

10	Concrete deck +10
11	Concrete deck -10
12	Shrinkage -23,5
13	UDL - Span 1L
14	UDL - Span 1P
15	UDL - Span 2L
16	UDL - Span 2P
17	UDL - Span 3L
18	UDL - Span 3P
19	TS
20	Single Axial Load 400
21	Crowd load - Span 1
22	Crowd load - Span 2
23	Crowd load - Span 3
24	TS mod - local checks

Fig. 6.23 Load cases

37 (K)	COMB 1 ULS	(13+17+19+21+23)*1.35+10*0.90
55 (K)	COMB 2 ULS	(13+17+19+21+23)*1.35+11*0.90+12*0.48
77 (K)	COMB 3 ULS	(14+18+19+21+23)*1.35+10*0.90
95 (K)	COMB 4 ULS	(14+18+19+21+23)*1.35+11*0.90+12*0.48
117 (K)	COMB 5 ULS	(15+19+22)*1.35+10*0.90
131 (K)	COMB 6 ULS	(15+19+22)*1.35+11*0.90+12*0.48
149 (K)	COMB 7 ULS	(16+19+22)*1.35+10*0.90
163 (K)	COMB 8 ULS	(16+19+22)*1.35+11*0.90+12*0.48
181 (K)	COMB 9 ULS	(13+15+19+21+22)*1.35+10*0.90
199 (K)	COMB 10 ULS	(13+15+19+21+22)*1.35+11*0.90+12*0.48
221 (K)	COMB 11 ULS	(14+16+19+21+22)*1.35+10*0.90
239 (K)	COMB 12 ULS	(14+16+19+21+22)*1.35+11*0.90+12*0.48
261 (K)	COMB 1 SLS	(13+17+19+21+23)*1.00+10*0.60
279 (K)	COMB 2 SLS	(13+17+19+21+23)*1.00+11*0.60+12*0.36
301 (K)	COMB 3 SLS	(14+18+19+21+23)*1.00+10*0.60
319 (K)	COMB 4 SLS	(14+18+19+21+23)*1.00+11*0.60+12*0.36
341 (K)	COMB 5 SLS	(15+19+22)*1.00+10*0.60
355 (K)	COMB 6 SLS	(15+19+22)*1.00+11*0.60+12*0.36
373 (K)	COMB 7 SLS	(16+19+22)*1.00+10*0.60
387 (K)	COMB 8 SLS	(16+19+22)*1.00+11*0.60+12*0.36
405 (K)	COMB 9 SLS	(13+15+19+21+22)*1.00+10*0.60
423 (K)	COMB 10 SLS	(13+15+19+21+22)*1.00+11*0.60+12*0.36
445 (K)	COMB 11 SLS	(14+16+19+21+22)*1.00+10*0.60
463 (K)	COMB 12 SLS	(14+16+19+21+22)*1.00+11*0.60+12*0.36

Fig. 6.24 Load combinations

Load factor 0,36 and 0,48 for shrinkage action is calculated as:

$$\gamma_{F,Shrink,SLS} = \frac{E_{c,s,Eff}}{E_{cn}} = \frac{11,7}{32,8} = 0,357$$

$$\gamma_{F,Shrink,ULS} = \frac{E_{c,s,Eff}}{E_{cn}} \cdot 1,35 = \frac{11,7}{32,8} \cdot 1,35 = 0,482$$

For thermal action ψ_0 coefficient equal to 0,6 was taken into account.

Internal forces in beams and normal stresses in concrete envelope:

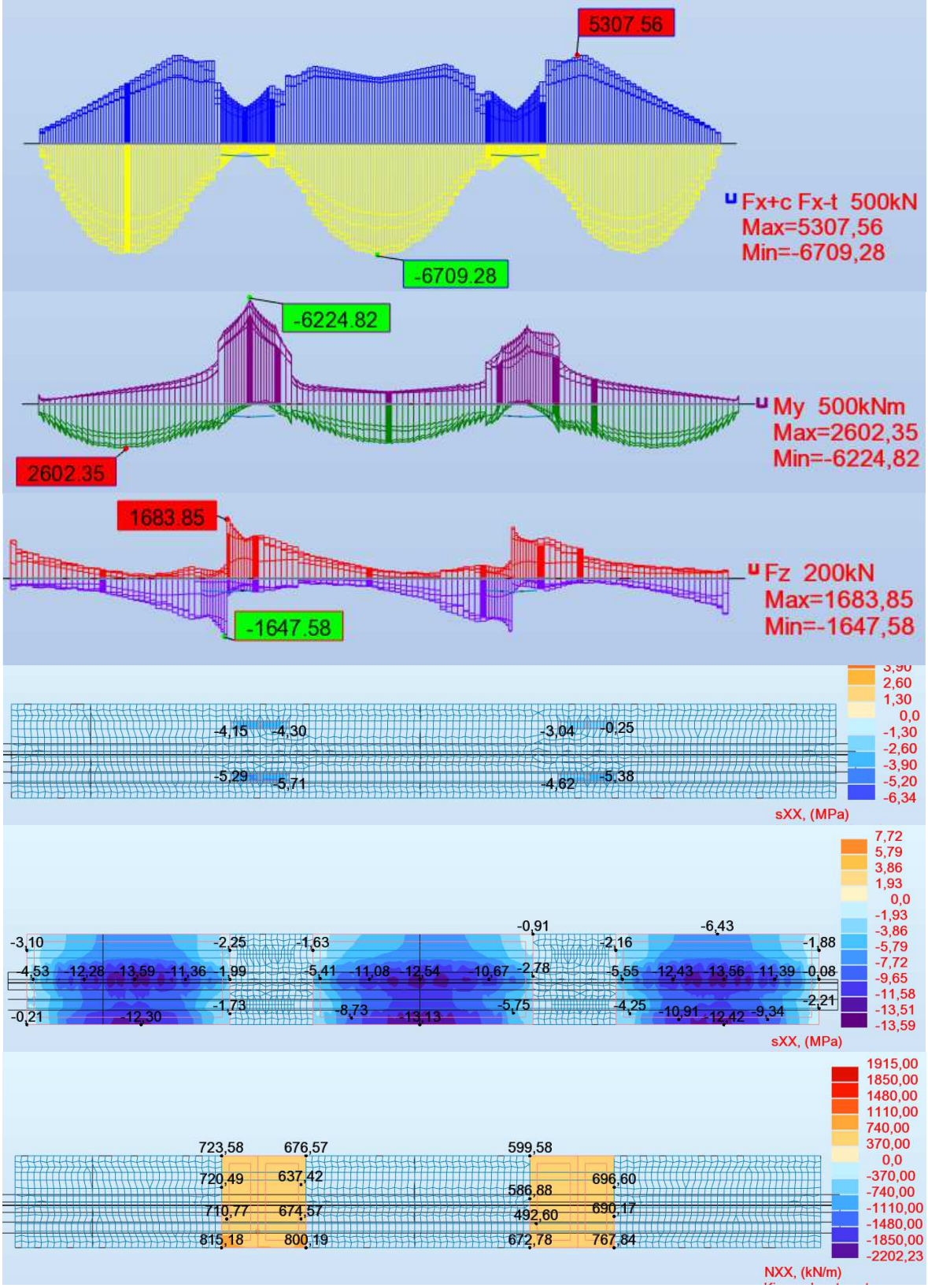

Fig. 6.25 Envelope of internal forces in steel beam and stresses/ axial forces in concrete in stage 5

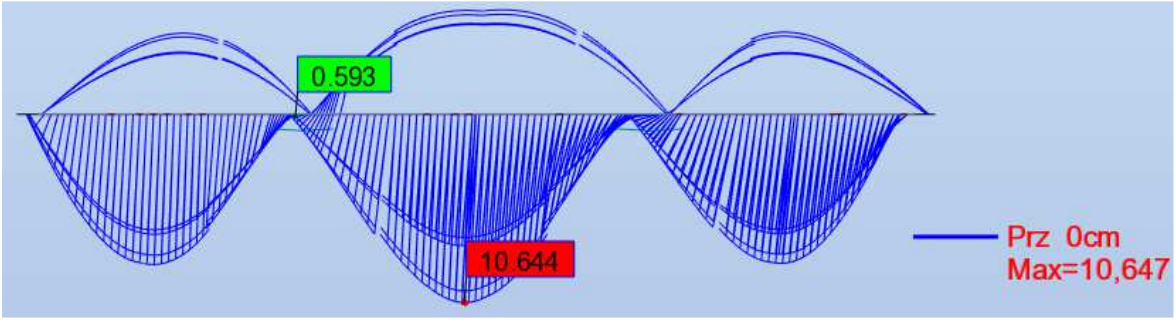

Fig. 6.26 Deformation in stage 5

Dimensioning is made according to [8] for all sections.

- for intermediate support zone:

	N [kN]	M [kNm]	A [m^2]	IY [m^4]	zTOP [m]	zBOTTOM [m]	sig TOP [MPa]	sig BOTTOM [MPa]
Girder 1	1522	-5601	0,0995	0,0858	1,25	-1,25	**-66,3**	**96,9**
Girder 2	1908	-5316	0,0995	0,0858	1,25	-1,25	**-58,3**	**96,6**
Girder 3	2177	-5827	0,0995	0,0858	1,25	-1,25	**-63,0**	**106,8**
Girder 4	2177	-6225	0,0995	0,0858	1,25	-1,25	**-68,8**	**112,6**

$$\sigma_{C,BOTTOM} = 5{,}7\,\text{MPa}$$

$$\sigma_{A,MAX} = \frac{N}{A} = \frac{0{,}816}{0{,}00628} = 129{,}9\,\text{MPa}$$

- for mid-span regions of side span (presented internal forces lead to obtain maximum tensile stresses in bottom flange or compressed in top flange in a half of segment length):

	N [kN]	M [kNm]	A [m^2]	IY [m^4]	zTOP [m]	zBOTTOM [m]	sig TOP [MPa]	sig BOTTOM [MPa]
Girder 1	-4517	1753	0,0635	0,0129	0,559	-0,559	**4,8**	**-147,1**
Girder 2	-5338	2039	0,0635	0,0129	0,559	-0,559	**4,3**	**-172,4**
Girder 3	-6195	2465	0,0635	0,0129	0,559	-0,559	**9,3**	**-204,4**
Girder 4	-6613	2602	0,0635	0,0129	0,559	-0,559	**8,6**	**-216,9**

	N [kN]	M [kNm]	A [m^2]	IY [m^4]	zTOP [m]	zBOTTOM [m]	sig TOP [MPa]	sig BOTTOM [MPa]
Girder 1	-2519	1734	0,0635	0,0129	0,559	-0,559	**35,5**	**-114,8**
Girder 2	-3224	2017	0,0635	0,0129	0,559	-0,559	**36,6**	**-138,2**
Girder 3	-4028	2393	0,0635	0,0129	0,559	-0,559	**40,3**	**-167,1**
Girder 4	-4468	2552	0,0635	0,0129	0,559	-0,559	**40,2**	**-181,0**

$\sigma_{C,TOP,1} = 13{,}6\,\text{MPa}$

- for mid-span regions of middle span (presented internal forces lead to obtain maximum tensile stresses in bottom flange or compressed in top flange in a half of segment length):

	N [kN]	M [kNm]	A [m^2]	IY [m^4]	zTOP [m]	zBOTTOM [m]	sig TOP [MPa]	sig BOTTOM [MPa]
Girder 1	-4804	1525	0,0635	0,0129	0,559	-0,559	**-9,6**	**-141,7**
Girder 2	-5592	1810	0,0635	0,0129	0,559	-0,559	**-9,6**	**-166,5**
Girder 3	-6358	2207	0,0635	0,0129	0,559	-0,559	**-4,5**	**-195,8**
Girder 4	-6709	2326	0,0635	0,0129	0,559	-0,559	**-4,9**	**-206,4**

	N [kN]	M [kNm]	A [m^2]	IY [m^4]	zTOP [m]	zBOTTOM [m]	sig TOP [MPa]	sig BOTTOM [MPa]
Girder 1	3683	-634	0,0635	0,0129	0,559	-0,559	**30,5**	**85,5**
Girder 2	3659	-627	0,0635	0,0129	0,559	-0,559	**30,4**	**84,8**
Girder 3	3857	-686	0,0635	0,0129	0,559	-0,559	**31,0**	**90,5**
Girder 4	3967	-718	0,0635	0,0129	0,559	-0,559	**31,4**	**93,6**

$\sigma_{C,TOP,2} = 13{,}1\,\text{MPa}$

6.3.4 Resistance checks

Taking into account all construction stages and summing stresses obtain in previous calculations one can obtain final stress plot in steel girders as in tables below.

	Intermediate support zone									
	STAGE 1 + 2		STAGE 3		STAGE 4		STAGE 5		STAGE 1 - 5	
	σ TOP [MPa]	σ BOTTOM [MPa]	σ TOP [MPa]	σ BOTTOM [MPa]	σ TOP [MPa]	σ BOTTOM [MPa]	σ TOP [MPa]	σ BOTTOM [MPa]	σ TOP [MPa]	σ BOTTOM [MPa]
Girder 1	**-36,0**	**36,7**	**-138,0**	**113,5**	**-45,8**	**55,9**	**-66,3**	**96,9**	**-286,1**	**303,0**
Girder 2	**-36,0**	**36,7**	**-138,0**	**113,5**	**-39,9**	**48,4**	**-58,3**	**96,6**	**-272,2**	**295,3**
Girder 3	**-36,0**	**36,7**	**-138,0**	**113,5**	**-28,4**	**30,3**	**-63,0**	**106,8**	**-265,4**	**287,2**
Girder 4	**-36,0**	**36,7**	**-138,0**	**113,5**	**-28,9**	**34,5**	**-68,8**	**112,6**	**-271,7**	**297,2**

	Side span									
	STAGE 1 + 2		STAGE 3		STAGE 4		STAGE 5		STAGE 1 - 5	
	σ TOP [MPa]	σ BOTTOM [MPa]	σ TOP [MPa]	σ BOTTOM [MPa]	σ TOP [MPa]	σ BOTTOM [MPa]	σ TOP [MPa]	σ BOTTOM [MPa]	σ TOP [MPa]	σ BOTTOM [MPa]
Girder 1	**29,7**	**-29,7**	**125,5**	**-125,5**	**13,1**	**-54,8**	**35,5**	**-147,1**	**203,8**	**-357,1**
Girder 2	**29,7**	**-29,7**	**125,5**	**-125,5**	**12,9**	**-50,0**	**36,6**	**-172,4**	**204,7**	**-377,7**
Girder 3	**29,7**	**-29,7**	**125,5**	**-125,5**	**8,6**	**-33,8**	**40,3**	**-204,4**	**204,0**	**-393,4**
Girder 4	**29,7**	**-29,7**	**125,5**	**-125,5**	**7,7**	**-33,1**	**40,2**	**-216,9**	**203,2**	**-405,2**

	Middle span									
	STAGE 1 + 2		STAGE 3		STAGE 4		STAGE 5		STAGE 1 - 5	
	σ TOP [MPa]	σ BOTTOM [MPa]	σ TOP [MPa]	σ BOTTOM [MPa]	σ TOP [MPa]	σ BOTTOM [MPa]	σ TOP [MPa]	σ BOTTOM [MPa]	σ TOP [MPa]	σ BOTTOM [MPa]
Girder 1	**23,1**	**-23,1**	**95,6**	**-95,6**	**11,8**	**-43,3**	**30,5**	**-141,7**	**161,0**	**-303,8**
Girder 2	**23,1**	**-23,1**	**95,6**	**-95,6**	**11,2**	**-40,0**	**30,4**	**-166,5**	**160,3**	**-325,2**
Girder 3	**23,1**	**-23,1**	**95,6**	**-95,6**	**6,2**	**-28,6**	**31,0**	**-195,8**	**155,9**	**-343,1**
Girder 4	**23,1**	**-23,1**	**95,6**	**-95,6**	**5,3**	**-28,0**	**31,4**	**-206,4**	**155,3**	**-353,1**

Dimensioning made according to [8] leads to following resistance conditions.

- for intermediate support zone:

$$\sigma_{A,TOP} = -286{,}1\,\text{MPa} < f_y = 460\,\text{MPa}$$

$$\sigma_{A,BOTTOM} = 303{,}0\,\text{MPa} < f_y = 460\,\text{MPa}$$

$$\sigma_{C,BOTTOM} = 5{,}6 + 3{,}1 + 5{,}7 = 14{,}4\,\text{MPa} < 0{,}85 \cdot f_{cd} = 0{,}85 \cdot \frac{30}{1{,}5} = 17{,}0\,\text{MPa}$$

$$\sigma_{A,REINF,ULS} = 50{,}8 + 129{,}9 = 180{,}7\,\text{MPa} < f_{sd} = \frac{f_{sk}}{\gamma_a} = \frac{500}{1{,}15} = 435\,\text{MPa}$$

$$\sigma_{A,REINF,SLS} = \sigma_{A,0,REINF,SLS} + \Delta\sigma_A = 133{,}9 + 33{,}3 = 167{,}1\,\text{MPa} < \sigma_s = 240\,\text{MPa}$$

$$\sigma_{A,0,REINF,SLS} \approx \frac{180{,}7}{1{,}35} = 133{,}9\,\text{MPa}$$

$$\Delta\sigma_A = \frac{0{,}4 \cdot f_{ctm}}{\alpha_{st} \cdot \rho_s} = \frac{0{,}4 \cdot 2{,}90}{1{,}711 \cdot (0{,}00628 / 0{,}308)} = 33{,}3$$

$$\alpha_{st} = \frac{A \cdot I}{A_a \cdot I_a} = \frac{0{,}1205 \cdot 0{,}12125}{0{,}0995 \cdot 0{,}0858} = 1{,}711$$

For maximum crack width 0,2 mm and bar spacing 100 mm allowable stress in steel rebar is 240 MPa (Tab. 7.2 [12]).

Maximum shear force:

$$V_{MAX} = 293 + 1009 + 371 + 1648 = 3321\,\text{kN}$$

τ_{cr} =	**121,2**	[MPa]
$\bar{\lambda}_w$ =	**1,480**	[-]
χ_w =	**0,561**	[-]
$V_{bw,Rd}$ =	**8482,4**	[kN]

$$\frac{V_{MAX}}{V_{bw,Rd}} = \frac{3321}{8482} = 0{,}392 < 0{,}5$$

- for mid-span regions of side span:

$$\sigma_{A,TOP} = 204{,}7\,\text{MPa} < f_y = 460\,\text{MPa}$$

$$\sigma_{A,BOTTOM} = -405{,}2\,\text{MPa} < f_y = 460\,\text{MPa}$$

$$\sigma_{C,TOP} = 3{,}0 + 13{,}6 = 16{,}6\,\text{MPa} < f_{cd} = \frac{f_{ck}}{\gamma_c} = \frac{30}{1{,}5} = 20{,}0\,\text{MPa}$$

Maximum shear force:

$$V_{MAX,HLR} = 111 + 473 + 190 + 1083 = 1857\,\text{kN}$$

$$\tau_{Ed} = \frac{V_{MAX,HLR} \cdot S}{I \cdot t} = \frac{1{,}857 \cdot 0{,}0133}{0{,}0129 \cdot 0{,}026} = 73{,}6\,\text{MPa} <$$

$$< \frac{f_y}{\gamma_{M0} \cdot \sqrt{3}} = \frac{460}{1{,}0 \cdot \sqrt{3}} = 265{,}6\,\text{MPa}$$

- for mid-span regions of middle span:

$$\sigma_{A,TOP} = 161{,}0\,\text{MPa} < f_y = 460\,\text{MPa}$$

$$\sigma_{A,BOTTOM} = -353{,}1\,\text{MPa} < f_y = 460\,\text{MPa}$$

$$\sigma_{C,TOP} = 2{,}6 + 13{,}1 = 15{,}7\,\text{MPa} < f_{cd} = \frac{f_{ck}}{\gamma_c} = \frac{30}{1{,}5} = 20{,}0\,\text{MPa}$$

6.3.5 Concrete deck dimensioning

Hereafter static calculations and dimensioning of concrete slab on transversal direction is presented. Actions are described in 6.1, their list and combinations are presented below. Dynamic factor taken into account for dimensioning elements close to extension joints is omitted in presented calculations as it influences only local parts of the deck, where stronger reinforcement can be design. This aspects are to be solved in detailed design.

1	DW steel and concrete
2	DW pavements
3	DW asphalt
4	DW equipment
5	Removal of deck formwork
6	Settlement 1
7	Settlement 2
8	Settlement 3
9	Settlement 4
10	Concrete deck +10
11	Concrete deck -10
12	Shrinkage -23,5
13	UDL - Span 1L
14	UDL - Span 1P
15	UDL - Span 2L
16	UDL - Span 2P
17	UDL - Span 3L
18	UDL - Span 3P
19	TS
20	Single Axial Load 400
21	Crowd load - Span 1
22	Crowd load - Span 2
23	Crowd load - Span 3
24	TS mod - local checks

37 (K)	COMB 1 ULS	(1+2+3+4+13+15+17+24)*1.35
43 (K)	COMB 2 ULS	(1+2+3+4+20)*1.35
49 (K)	COMB 3 ULS	(1+2+3+4+14+16+18+24)*1.35
55 (K)	COMB 4 ULS	(1+2+3+4+21+22+23+24)*1.35
61 (K)	COMB 1 SLS	(1+2+3+4+13+15+17+24)*1.00
67 (K)	COMB 2 SLS	(1+2+3+4+20)*1.00
73 (K)	COMB 3 SLS	(1+2+3+4+14+16+18+24)*1.00
79 (K)	COMB 4 SLS	(1+2+3+4+21+22+23+24)*1.00

Fig. 6.27 Load cases and combinations

Bending moments and shear forces envelopes in ULS are presented below:

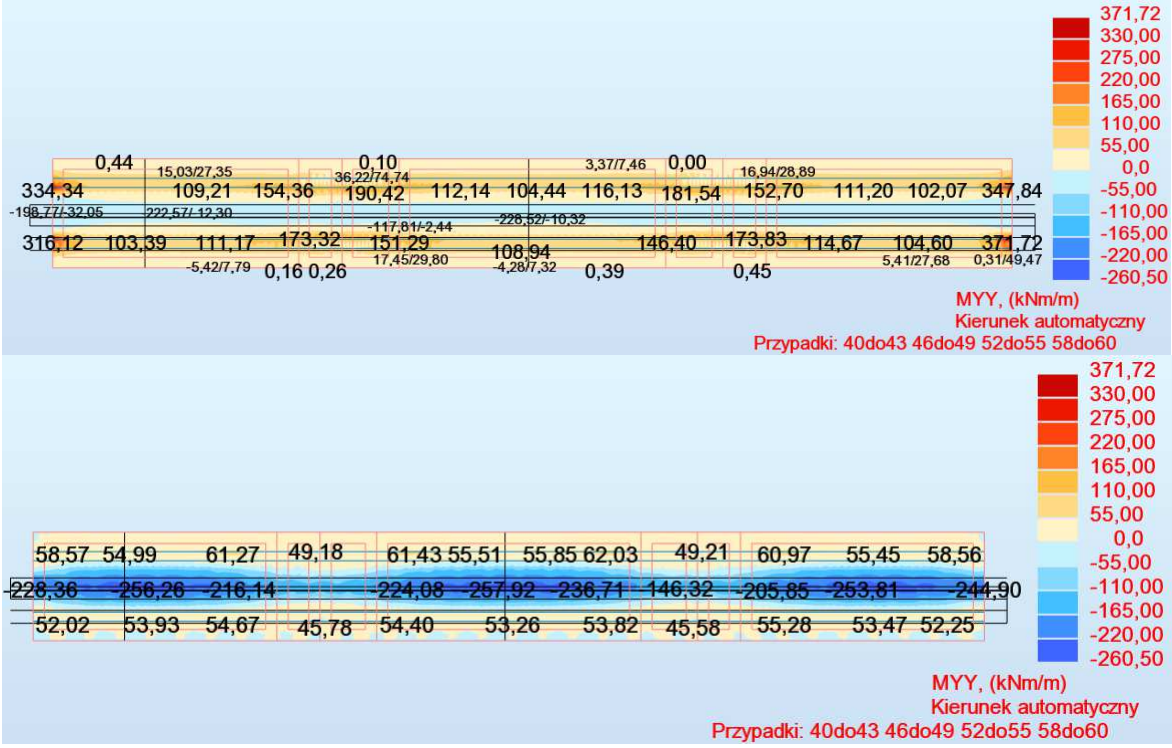

Fig. 6.28 Upper and lower bending moments envelope in ULS

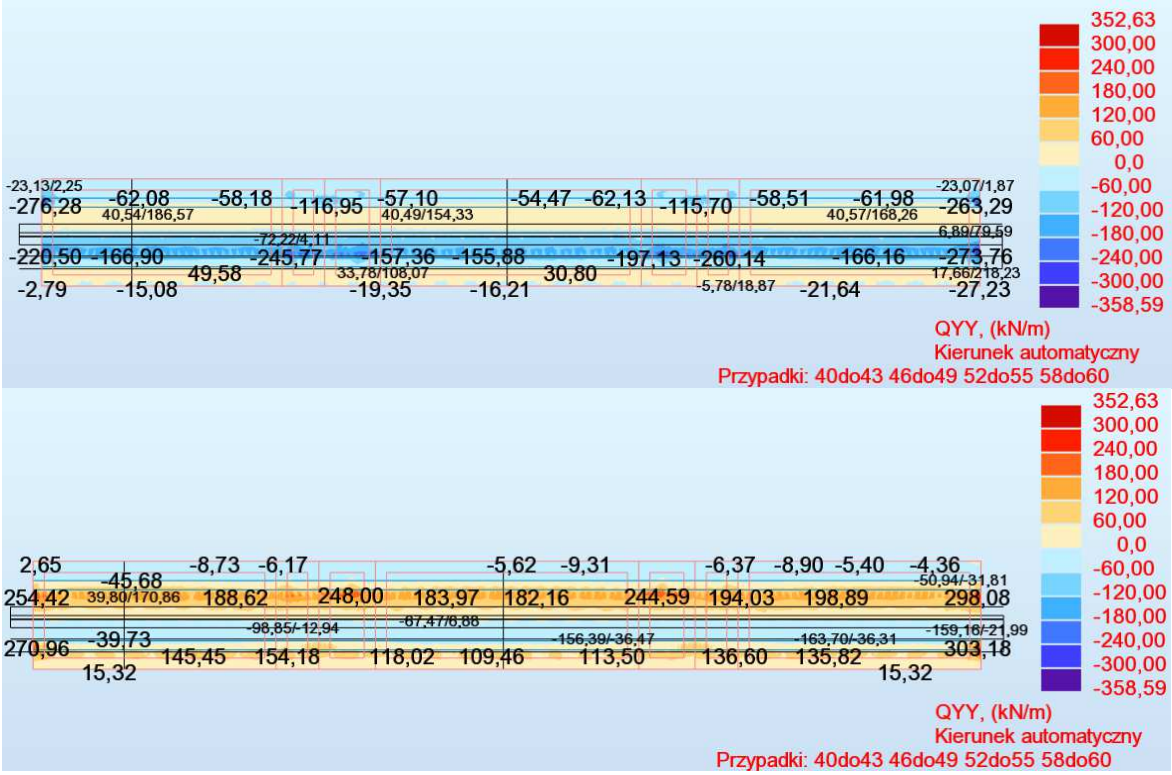

Fig. 6.29 Upper and lower shear forces envelope in ULS

Reinforcement required because of positive bending moment 258 kNm/m is 27,30 cm^2/m:

b =	100	[cm]	γ_C =	1,5	[-]
h =	30	[cm]	α_{cc} =	1,00	[-]
A_{s1} =	27,30	[cm^2]	γ_S =	1,15	[-]
A_{s2} =	27,30	[cm^2]	$\varepsilon_{s,max}$ =	90	[‰]
e_{s1} =	4	[cm]			
e_{s2} =	4	[cm]	$M_{Ed,ULS}$ =	258	[kNm]

ε_c =	3,500	[‰]	Strains in outer fibers of compressed concrete in ULS
ε_{s1} =	14,265	[‰]	Strains in tensile rebar in ULS
ε_{s2} =	0,767	[‰]	Strains in compressed rebar in ULS

M_{Rd} = **276,6** [kNm] Bending resistance accordning to EN 1992-1-1 with bilinear stress-strain chard for concrete

$$\frac{M_{Ed}}{M_{Rd}} = 0{,}933 \quad < \quad 1$$

$$w_k = s_{r,\max} \cdot (\varepsilon_{sm} - \varepsilon_{cm}) = 0{,}22 \text{ [mm]}$$ Crack width for SLS conditions

Rebar required because of transversal tension from longitudinal shearing is calculated on basis of studs resistance (20 studs/m, see chapter 5.3):

$$V_L = \frac{n \cdot P_{Rd}}{L} \approx \frac{20 \cdot 100}{1} \approx 2000\,\text{kN/m}$$

$$\frac{A_{sf} \cdot f_{sd}}{s_f} \geq \frac{V_L}{\cot \phi_f}$$

$$\frac{A_{sf}}{s_f} \geq \frac{0{,}5 \cdot 2{,}0}{1 \cdot 435} = 23{,}0\,\text{cm}^2/\text{m}$$

Required rebar in lower layer because of bending moment is assumed as #20 cc. 100. Above girders additional haunch reinforcement #12 cc. 100 is needed to prevent transversal splitting of concrete due to longitudinal shearing and to meet constructive rules of rebar placing. This way requirement 6.2.4(5) of EN 1992-1-1 is fulfilled (area of provided rebar is bigger than this required because of longitudinal shearing or this required because of bending + half of this required because of longitudinal shearing):

$$\frac{A_{sf}}{s_f} = 31{,}4 + 11{,}3 = 42{,}7\,\text{cm}^2/\text{m} > \begin{cases} 23{,}0\,\text{cm}^2/\text{m} \\ 27{,}3 + 0{,}5 \cdot 23{,}0 = 38{,}8\,\text{cm}^2/\text{m} \end{cases}$$

Reinforcement required because of negative bending moment 191 kNm/m is 20,1 cm^2/m:

b =	100	[cm]	γ_C =	1,5	[-]
h =	35	[cm]	α_{cc} =	1,00	[-]
A_{s1} =	20,1	[cm^2]	γ_S =	1,15	[-]
A_{s2} =	27,3	[cm^2]	$\varepsilon_{s,max}$ =	90	[‰]
e_{s1} =	4	[cm]			
e_{s2} =	4	[cm]	$M_{Ed,ULS}$ =	191	[kNm]

ε_c =	3,500	[‰]	Strains in outer fibers of compressed concrete in ULS
ε_{s1} =	20,748	[‰]	Strains in tensile rebar in ULS
ε_{s2} =	0,371	[‰]	Strains in compressed rebar in ULS

M_{Rd} = 251,1 [kNm] Bending resistance accordning to EN 1992-1-1 with bilinear stress-strain chard for concrete

$$\frac{M_{Ed}}{M_{Rd}} = 0{,}761 \quad < \quad 1$$

$$w_k = s_{r,\max} \cdot (\varepsilon_{sm} - \varepsilon_{cm}) = 0{,}20 \text{ [mm]}$$ Crack width for SLS conditions

Required rebar in upper layer is #16 cc. 100, but because of resistance against shearing #20 cc. 100 is assumed (see shear resistance check below).

Checking a concrete deck for shear forces 204 kN/m (average value of shear forces taken from width of concrete deck equal to 2 m in the most unfavorable place):

b =	100	[cm]	γ_C =	1,5	[-]
h =	35	[cm]	α_{cc} =	1,0	[-]
A_{sl} =	31,4	[cm^2]	γ_S =	1,15	[-]
e_{sl} =	4	[cm]	V_{Ed} =	204	[kN]

C 30/37
BSt 500

$$V_{Rd,c1} = \left[C_{Rd,c} \cdot k \cdot (100 \cdot \rho_l \cdot f_{ck})^{\frac{1}{3}} + k_1 \cdot \sigma_{cp} \right] \cdot b_w \cdot d = 209{,}3 \text{ [kN]}$$

$$V_{Rd,c2} = (v_{\min} + k_1 \cdot \sigma_{cp}) \cdot b_w \cdot d = 143{,}9 \text{ [kN]}$$

$V_{Rd,c}$ = 209,3 [kN] Shear resistance of cross-section without rebar agains shearing

$$\frac{V_{Ed}}{V_{Rd,c}} = \boxed{0{,}975} \quad < \quad 1$$

$$\frac{V_{Ed}}{0{,}5 \cdot b_w \cdot d \cdot v \cdot f_{cd}} = \boxed{0{,}125} \quad < \quad 1$$

Concrete deck does not require reinforcement against vertical shear.

In above calculations local regions close to extension joints are omitted. More rebar has to be provided there, what needs to be taken into account in detailed static calculations.

General layout of rebar is presented in Fig. 6.30 below.

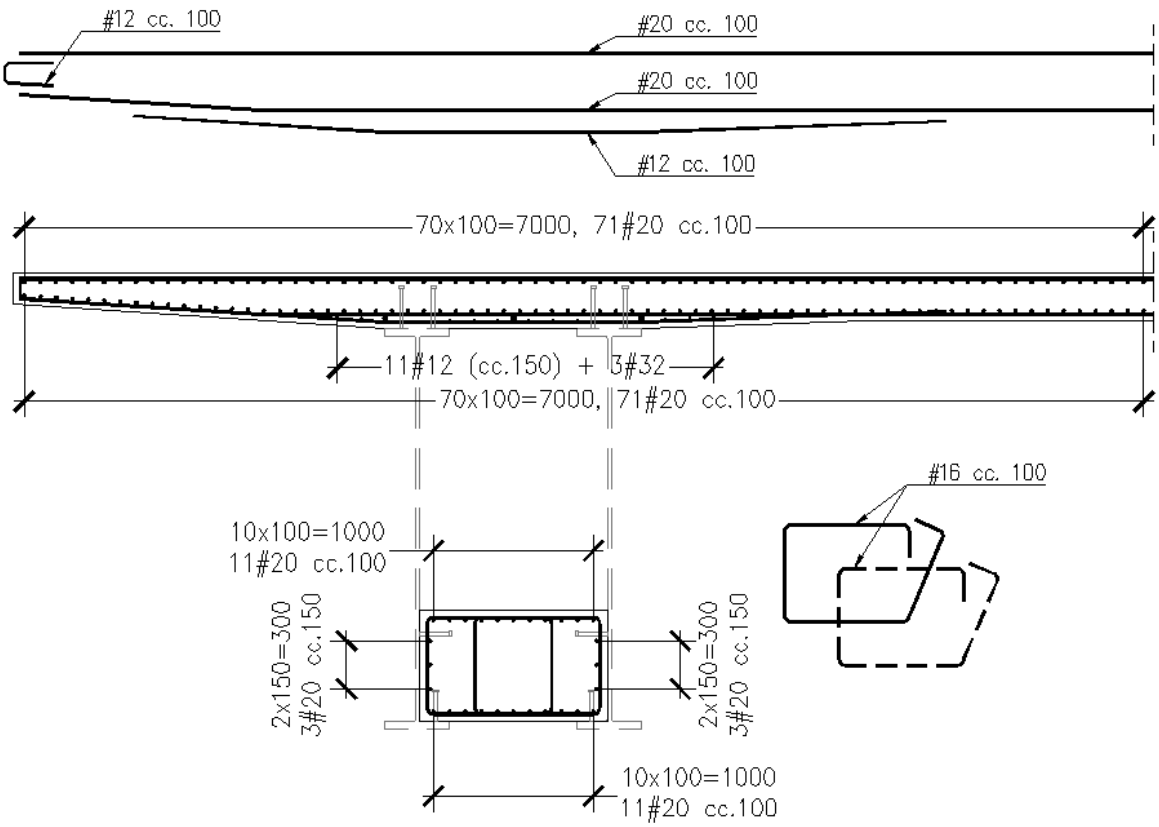

Fig. 6.30 General layout of rebar

6.4 Conclusions

One can notice on basis of presented static calculations that analyzed bridge can be design with tandem girders made out of HL1100R from S460 steel grade leading to steel con-

sumption of 154 kg/m^2 (including 139 kg/m^2 HL1100R). Comparing stresses in ULS with design yield strength of material it can be even stated that girders can be optimized in longitudinal direction by replacing HL1100R with HL1100B / HL1100M depending on desired utilization ratio or even longer spans can be covered by described system.

Comparison of main results between calculations shown in chapter 5 (Case study) and 6 (Validation report) is presented in table below.

			Beam + panel model by Robot	Beam model by Sofistik	Difference
Intermediate support zone	σ TOP	[MPa]	286	314	110%
	σ BOTTOM	[MPa]	303	309	102%
	σ C, BOTTOM	[MPa]	14,4	13	90%
	σ REINF,TOP	[MPa]	181	164	91%
	V MAX	[kN]	3321	2971	89%
Side span	σ TOP	[MPa]	205	196	96%
	σ BOTTOM	[MPa]	405	403	99%
	σ C, TOP	[MPa]	16,6	13	78%
	V MAX	[kN]	1857	1961	106%
Middle span	σ TOP	[MPa]	161	154	96%
	σ BOTTOM	[MPa]	353	372	105%
	σ C, TOP	[kN]	15,7	14	89%

Stresses in steel beams can be compared directly, stresses in concrete and reinforcement are calculated in Robot (on a safe side) as adding maximum stresses in slab width from stages 4 and 5, so are overestimated of approx. 2,0 MPa. This explains a little bit bigger differences between concrete stresses calculated by means of both methods.

Differences between main static values are results of different calculations of effects of rheology of concrete, different models of thermal actions, assumptions of modelising two beams in tandem as a one bar in FEA in Sofistik. Differences up to approx. 10 % validate correctness of calculations made in chapter 5 (Case study). Assumptions made for analysis of beam model are basis for design recommendations.

7 WP 1.5 SUMMARY, CONCLUSIONS AND GENERAL DESIGN RECOMMENDATIONS (FOR PRE-DESIGN)

The project is focused on system for spans about 50 m long, but proposed solutions can easily be adopted for longer spans also. It is evident that variable construction height is necessary for such a long spans made mainly out of hot-rolled sections, hence specific structural solutions have been proposed to make this span length limit available for rolled sections also. The proposed idea of variable height in support region assumes as small amount of steel works (welding) as possible. The main aspects of the new solution are pointed below.

1. Variable construction height of spans is needed. Height increase in intermediate support zones is realized with cut-along I-beams with welded in-between steel plate (as the web). Entire spans are thus made out of rolled girders with minimized welding works and plates utilization.

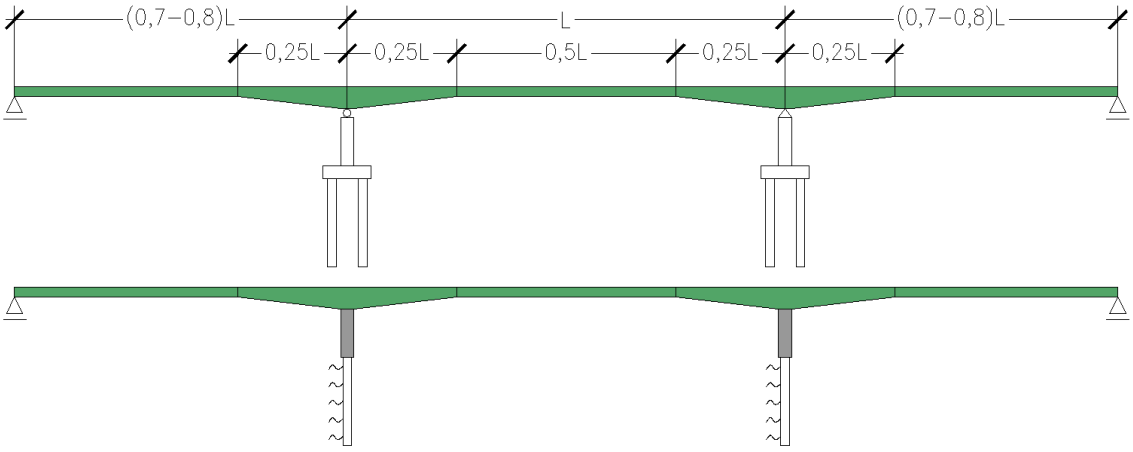

Fig. 7.1 Longitudinal bridge geometry

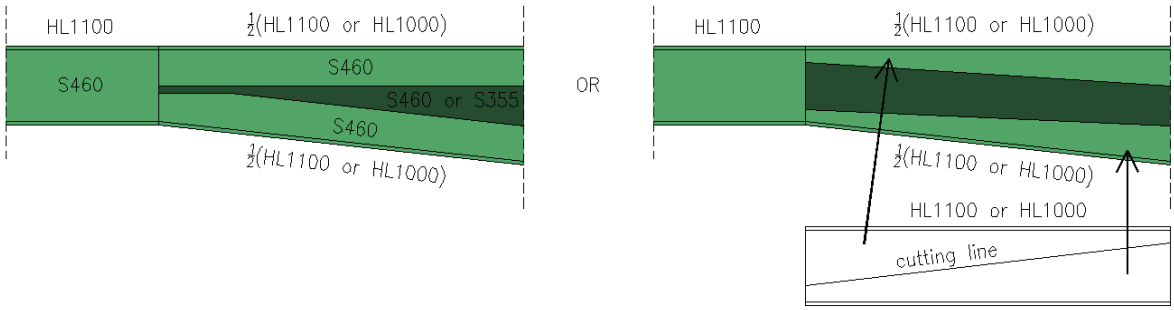

Fig. 7.2 Support zone – flat plate welded in-between cut in half HL profiles

2. Tandem solution is applied instead of uniformly spaced girders in transversal direction (in bridge cross-section), what influences in a favourable manner a transversal loads distribution, as well as enables application of cost-effective temporary bracings for girders stability in construction stages and their strengthening by means of cast-in-situ concrete.

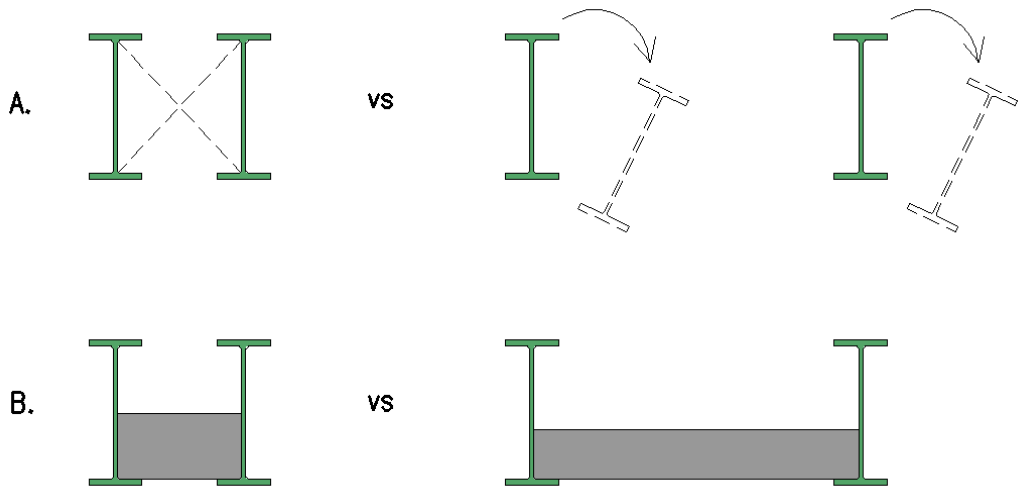

Fig. 7.3 Advantage of tandems over single girders in easy of: A. temporary bracing against LT buckling, B. compressed flange strengthening by means of cast-in-situ concrete

3. Support zone stiffness and resistance can be additionally increased by a lower concrete chord, which is cast-in-situ right after steel superstructure assembly phase. This solution solves also a problem of local and global stability in support zones.

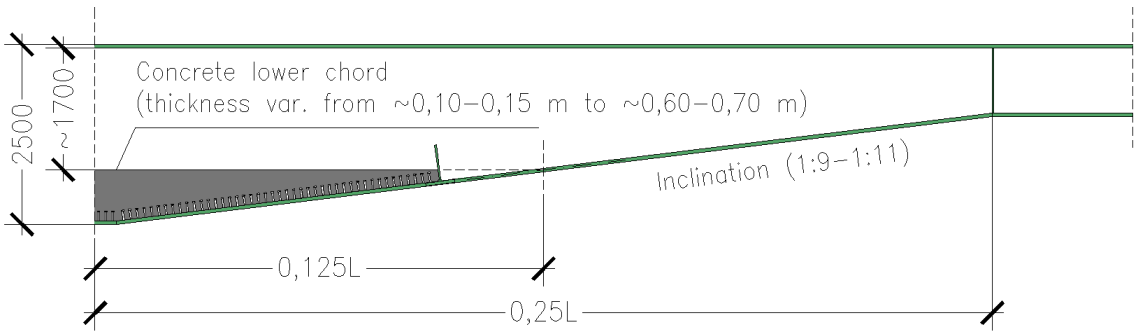

Fig. 7.4 Recommended support zone parameters

4. It is not required to assemble heavy temporary supports for purposes of concrete deck casting. Steel superstructure itself is fully capable to carry all construction stages loads. Slight temporary supports may (but not obligatory) be required only for purposes of steel structure assembly.

5. Solution is dedicated mainly to:

   - few span bridges, at least 3 spans, but not too many, because other methods becomes to be more economic in construction stages (as e.g. longitudinal launching),
   - weak soil conditions, because proposed solution can easily be adopted in frame static systems, what generates big cost efficiency in foundation works (compered to competitive solutions e.g. RC pre-stressed continuous beams),
   - span width up to 14,5 m to handle it with 2 tandems (bigger number of tandems is of course allowable, but transversal load distribution will not be as favourable),
   - prescribed small construction height in mid-span, but not at intermediate supports, where 2,5 m in steel superstructure height is desired due to stiffness and resistance matters. Height of 2,5 m is a limit at the same time due to transport boundary conditions,
   - bridges without significant horizontal curvature, because any crossbeams are required in that case.

6. Solution remains very flexible concerning technology of realization, what allows to meet requirement of different steel contractors. Mainly below-mentioned aspects can be freely adjusted depending on need of particular contractor:

   - temporary LT buckling bracings can be used for girders stability within one tandem, but permanent welded short cross beams can also be adopted,
   - steel superstructure can be assembled with use of temporary supports, light cranes and with welding on girder's target elevation level, but it is also possible to assemble the structure without any temporary supports with heavier cranes (assembly length of particular segments can be adjusted),
   - concrete deck realization can be performed with cast-in-situ concrete on traditional formworks, with use of precast elements acting as lost formworks (e.g. filigree) or with longitudinal and transversal precast elements with cast-in-situ longitudinal and transversal wet joints only,
   - longitudinal optimization can easily be done, as different HL sections can be used along the bridge if spans are not well balanced (if needed).

General design recommendations for design, as well as the main calculation guidelines, are presented in chapter 4, and then used in design example in chapter 5 and 6.

First bridge have been designed in this new technology for city of Olsztyn in Poland (contract: elongation of Wilczyńskiego street to Warszawska street with connection to Bukowskiego street and crossing of Bartąska with Bukowskiego street). The bridge is called MD1 as the one of few bridges to be constructed in frame of this contract. Two independent structures A and B are designed for two lanes of road and different span widths b and span lengths L are used, the static system is 5-span continuous beam with 3 spans with horizontal curvature:

Bridge A: L = 35 + 44,83 + 44,53 + 54,92 + 34,63 m, b = 14,95 m
Bridge B: L = 35 + 45,15 + 45,40 + 55,99 + 35,31 m, b = 12,45 m

Safe side assumptions have been used during design and design have been carried out according to Polish standards, hence bigger steel consumption is obtained comparing to case-study calculations. Elastic resistance were required with big value of material safety factor for steel (1,20 x 1,05 = 1,26). Moreover the design started in the middle of PFR338-14 project and no detailed design recommendations had been ready at that time. Hence 3 tandems in each bridge section were safely used instead of two tandems finally proposed in this design recommendations. For all spans, excluding field part of the longest span, HLR1100 sections are used. HL1100x607 is used for the field part of the longest span. 2 or 3 intermediate crossbeams are use in curved spans. Composite section height is 1,55 m in field and 2,93 m at the support. All construction details are presented in appropriate drawings. Considering experience obtained during design of the MD1 bridge and other bridges offered as alterative solutions, there is some overview of boundary conditions that have to be fulfilled to make the solution attractive comparing to competitive solutions. These are listed in point 5 and 6 above.

In parallel to the design of the MD1 bridge alternative solutions have been proposed directly to the contractors in the middle of the PFR338-14 project, but the main problem was lack of design guide that time, so overestimations needed to be done. Finally at the end of project, having completed design guide a bridge in city of Opole was offered and using described solution and steel consumption general contractor won the tender. It is continuous beam 42 + 54 + 42 m. Steel consumption in original solution was 294 kg/m^2 of S355 steel. Alternative solution was proposed using tandems instead of boxes. The idea assumed using HL1100x607 section for 0,75 L in side spans and HL1100R at remaining length of bridge what resulted in steel consumption of about 230 kg/m^2. The solution is very similar to the one calculated as a case-study. There is very big probability that the bridge will be the first one constructed in described new technology.

Composite bridge 38+50+38, b=14.25m, 2x2HL1100R HISTAR460 , slab 0.30m C30/37

Default design code is EuroNorm 1994 (2004) Composite Structures (Europe) V 27.0
Structure: A (Buildings)
Snow load zone : 1

No. 1 S 355 T (EN 1993) S355

Youngs-modulus	E	210000	[MPa]	Safetyfactor		1.15	[-]
Poisson-Ratio	mu	0.30	[-]	Yield stress	fy	335.00	[MPa]
Shear-modulus	G	80769	[MPa]	Compr.yield val.	fyc	335.00	[MPa]
Compression modulus		175000	[MPa]	Tens. strength	ft	470.00	[MPa]
Weight		78.5	[kN/m3]	Compr. strength	fc	470.00	[MPa]
Density	rho	7850	[kg/m3]	Ultim. plast. strain		22.00	[o/oo]
Temp.elongat.coeff.		1.20E-05	[1/°K]	relative bond coeff.		0.00	[-]
max. thickness		80.00	[mm]	EC2 bondcoeff. K1		0.00	[-]
				Hardening modulus		0.00	[MPa]
				Proportional limit		335.00	[MPa]
				Dynamic stress range		0.00	[MPa]

Stress-Strain for serviceability
Is also extended beyond the
defined stress range

eps[o/oo]	sig-m[MPa]	E-t[MPa]
1000.000	470.00	0
22.000	470.00	0
1.595	335.00	6616
0.000	0.00	210000
-1.595	-335.00	6616
-22.000	-470.00	0
-1000.000	-470.00	0
Safetyfactor		1.15

Stress-Strain for ultimate load
Is also extended beyond the
defined stress range

eps[o/oo]	sig-u[MPa]	E-t[MPa]
1000.000	470.00	0
22.000	470.00	0
1.595	335.00	6616
0.000	0.00	210000
-1.595	-335.00	6616
-22.000	-470.00	0
-1000.000	-470.00	0
Safetyfactor		1.15

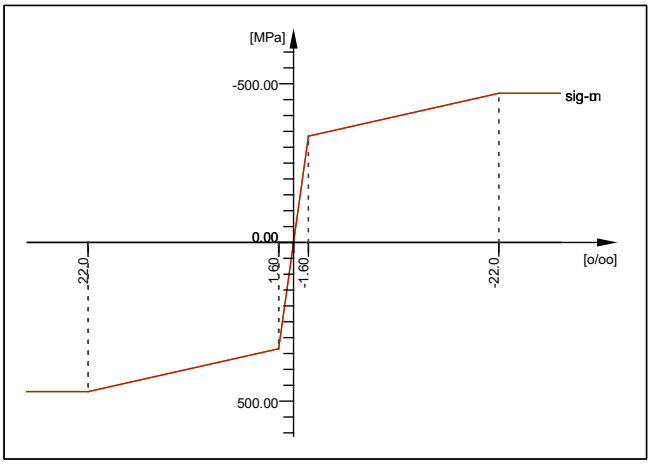

S 355 T (EN 1993) S355

No. 2 S 355 N (EN 1993) S355

Youngs-modulus	E	210000	[MPa]	Safetyfactor		1.15	[-]
Poisson-Ratio	mu	0.30	[-]	Yield stress	fy	355.00	[MPa]
Shear-modulus	G	80769	[MPa]	Compr.yield val.	fyc	355.00	[MPa]
Compression modulus		175000	[MPa]	Tens. strength	ft	490.00	[MPa]
Weight		78.5	[kN/m3]	Compr. strength	fc	490.00	[MPa]
Density	rho	7850	[kg/m3]	Ultim. plast. strain		22.00	[o/oo]
Temp.elongat.coeff.		1.20E-05	[1/°K]	relative bond coeff.		0.00	[-]
max. thickness		40.00	[mm]	EC2 bondcoeff. K1		0.00	[-]
				Hardening modulus		0.00	[MPa]
				Proportional limit		355.00	[MPa]
				Dynamic stress range		0.00	[MPa]

SOFiSTiK AG - www.sofistik.de

Composite bridge 38+50+38, b=14.25m, 2x2HL1100R HISTAR460 , slab 0.30m C30/37

No. 2 S 355 N (EN 1993) S355

Stress-Strain for serviceability
Is also extended beyond the
defined stress range

eps[o/oo]	sig-m[MPa]	E-t[MPa]
1000.000	490.00	0
22.000	490.00	0
1.690	355.00	6647
0.000	0.00	210000
-1.690	-355.00	6647
-22.000	-490.00	0
-1000.000	-490.00	0
Safetyfactor		1.15

Stress-Strain for ultimate load
Is also extended beyond the
defined stress range

eps[o/oo]	sig-u[MPa]	E-t[MPa]
1000.000	490.00	0
22.000	490.00	0
1.690	355.00	6647
0.000	0.00	210000
-1.690	-355.00	6647
-22.000	-490.00	0
-1000.000	-490.00	0
Safetyfactor		1.15

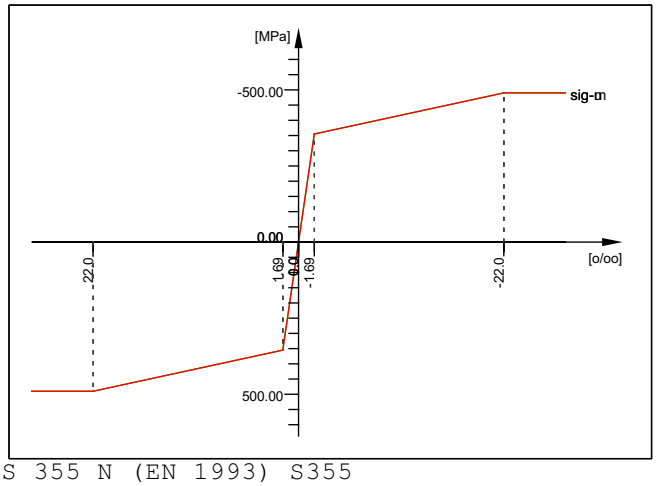

S 355 N (EN 1993) S355

No. 3 S 355 N (EN 1993) S355

Youngs-modulus	E	210000	[MPa]	Safetyfactor		1.15 [-]
Poisson-Ratio	mu	0.30	[-]	Yield stress	fy	355.00 [MPa]
Shear-modulus	G	80769	[MPa]	Compr.yield val.	fyc	355.00 [MPa]
Compression modulus		175000	[MPa]	Tens. strength	ft	490.00 [MPa]
Weight		0.0	[kN/m3]	Compr. strength	fc	490.00 [MPa]
Density	rho	0	[kg/m3]	Ultim. plast. strain		22.00 [o/oo]
Temp.elongat.coeff.		1.20E-05	[1/°K]	relative bond coeff.		0.00 [-]
max. thickness		40.00	[mm]	EC2 bondcoeff. K1		0.00 [-]
				Hardening modulus		0.00 [MPa]
				Proportional limit		355.00 [MPa]
				Dynamic stress range		0.00 [MPa]

Stress-Strain for serviceability
Is also extended beyond the
defined stress range

eps[o/oo]	sig-m[MPa]	E-t[MPa]
1000.000	490.00	0
22.000	490.00	0
1.690	355.00	6647
0.000	0.00	210000
-1.690	-355.00	6647
-22.000	-490.00	0
-1000.000	-490.00	0
Safetyfactor		1.15

Stress-Strain for ultimate load
Is also extended beyond the
defined stress range

eps[o/oo]	sig-u[MPa]	E-t[MPa]
1000.000	490.00	0
22.000	490.00	0
1.690	355.00	6647
0.000	0.00	210000
-1.690	-355.00	6647
-22.000	-490.00	0

SOFiSTiK AG - www.sofistik.de

Composite bridge 38+50+38, b=14.25m, 2x2HL1100R HISTAR460 , slab 0.30m C30/37

No. 3 S 355 N (EN 1993) S355

-1000.000	-490.00	0
Safetyfactor		1.15

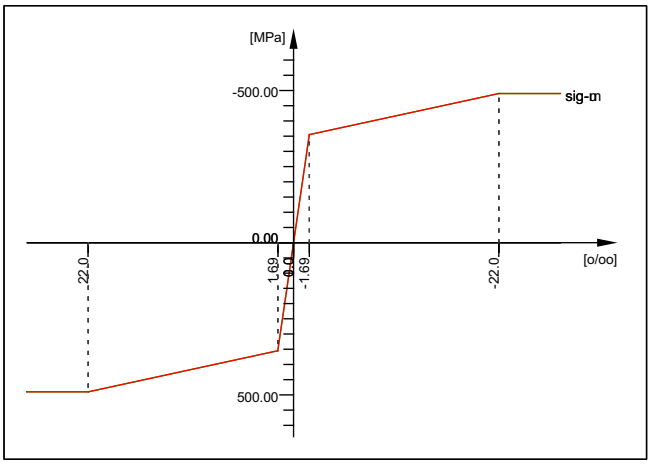

S 355 N (EN 1993) S355

No. 10 C 30/37 (EN 1992) C1:prefab slab

Youngs-modulus	E	32837	[MPa]	Safetyfactor		1.50	[-]
Poisson-Ratio	mu	0.20	[-]	Strength	fc	30.00	[MPa]
Shear-modulus	G	13682	[MPa]	Nomin. strength	fck	30.00	[MPa]
Compression modulus		18243	[MPa]	Tens. strength	fctm	2.90	[MPa]
Weight		25.0	[kN/m3]	5 % t.strength	fctk	2.03	[MPa]
Density	rho	2350	[kg/m3]	95 % t.strength	fctk	3.77	[MPa]
Temp.elongat.coeff.		1.00E-05	[1/°K]	Bond strength	fbd	3.04	[MPa]
				Service strength		38.00	[MPa]
				Fatigue strength		17.60	[MPa]
				Ten.strngth fctd		1.35	[MPa]

Stress-Strain for serviceability
Is only valid within the defined
stress range

eps[o/oo]	sig-m[MPa]	E-t[MPa]
0.000	0.00	34478
-1.081	-28.31	17746
-2.162	-38.00	0
-3.500	-22.47	-23499
Safetyfactor		1.50

Stress-Strain for ultimate load
Is only valid within the defined
stress range

eps[o/oo]	sig-u[MPa]	E-t[MPa]
0.000	0.00	30000
-2.000	-30.00	0
-3.500	-30.00	0
Safetyfactor		1.50

Stress-Strain of calc. mean values
Is only valid within the defined
stress range

eps[o/oo]	sig-r[MPa]	E-t[MPa]
0.000	0.00	28732
-1.081	-16.78	7018
-2.162	-20.00	0
-3.500	-17.25	-3601
Safetyfactor		(1.50)

SOFiSTiK AG - www.sofistik.de

Composite bridge 38+50+38, b=14.25m, 2x2HL1100R HISTAR460 , slab 0.30m C30/37

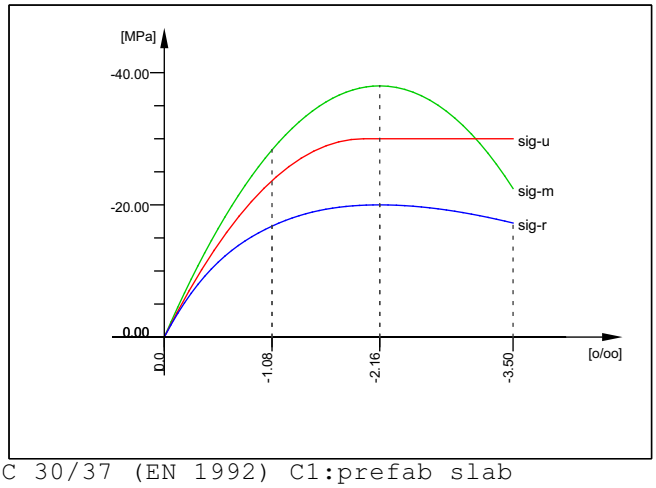

C 30/37 (EN 1992) C1:prefab slab

No. 11 C 30/37 (EN 1992) C1:prefab slab

Youngs-modulus	E	0	[MPa]	Safetyfactor		1.50	[-]
Poisson-Ratio	mu	0.20	[-]	Strength	fc	30.00	[MPa]
Shear-modulus	G	0	[MPa]	Nomin. strength	fck	30.00	[MPa]
Compression modulus		0	[MPa]	Tens. strength	fctm	2.90	[MPa]
Weight		25.0	[kN/m3]	5 % t.strength	fctk	2.03	[MPa]
Density	rho	2350	[kg/m3]	95 % t.strength	fctk	3.77	[MPa]
Temp.elongat.coeff.		1.00E-05	[1/°K]	Bond strength	fbd	3.04	[MPa]
				Service strength		38.00	[MPa]
				Fatigue strength		17.60	[MPa]
				Ten.strngth fctd		1.35	[MPa]

	eps[o/oo]	sig-m[MPa]	E-t[MPa]
Stress-Strain for serviceability			
Is only valid within the defined	0.000	0.00	34478
stress range	-1.081	-28.31	17746
	-2.162	-38.00	0
	-3.500	-22.47	-23499
Safetyfactor			1.50

	eps[o/oo]	sig-u[MPa]	E-t[MPa]
Stress-Strain for ultimate load			
Is only valid within the defined	0.000	0.00	30000
stress range	-2.000	-30.00	0
	-3.500	-30.00	0
Safetyfactor			1.50

	eps[o/oo]	sig-r[MPa]	E-t[MPa]
Stress-Strain of calc. mean values			
Is only valid within the defined	0.000	0.00	28732
stress range	-1.081	-16.78	7018
	-2.162	-20.00	0
	-3.500	-17.25	-3601
Safetyfactor			(1.50)

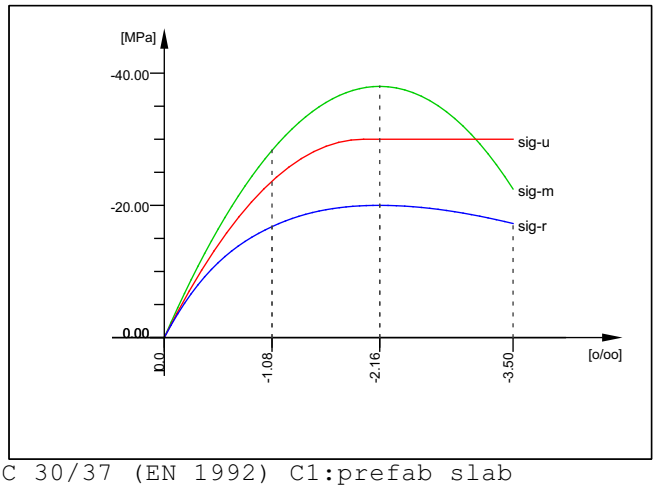

C 30/37 (EN 1992) C1:prefab slab

SOFiSTiK AG - www.sofistik.de

Composite bridge 38+50+38, b=14.25m, 2x2HL1100R HISTAR460 , slab 0.30m C30/37

No. 13 C 30/37 (EN 1992) C1:prefab bott

Youngs-modulus	E	32837	[MPa]	Safetyfactor		1.50	[-]
Poisson-Ratio	mu	0.20	[-]	Strength	fc	30.00	[MPa]
Shear-modulus	G	13682	[MPa]	Nomin. strength	fck	30.00	[MPa]
Compression modulus		18243	[MPa]	Tens. strength	fctm	2.90	[MPa]
Weight		25.0	[kN/m3]	5 % t.strength	fctk	2.03	[MPa]
Density	rho	2350	[kg/m3]	95 % t.strength	fctk	3.77	[MPa]
Temp.elongat.coeff.		1.00E-05	[1/°K]	Bond strength	fbd	3.04	[MPa]
				Service strength		38.00	[MPa]
				Fatigue strength		17.60	[MPa]
				Ten.strngth fctd		1.35	[MPa]

	eps[o/oo]	sig-m[MPa]	E-t[MPa]
Stress-Strain for serviceability			
Is only valid within the defined	0.000	0.00	34478
stress range	-1.081	-28.31	17746
	-2.162	-38.00	0
	-3.500	-22.47	-23499
	Safetyfactor		1.50

	eps[o/oo]	sig-u[MPa]	E-t[MPa]
Stress-Strain for ultimate load			
Is only valid within the defined	0.000	0.00	30000
stress range	-2.000	-30.00	0
	-3.500	-30.00	0
	Safetyfactor		1.50

	eps[o/oo]	sig-r[MPa]	E-t[MPa]
Stress-Strain of calc. mean values			
Is only valid within the defined	0.000	0.00	28732
stress range	-1.081	-16.78	7018
	-2.162	-20.00	0
	-3.500	-17.25	-3601
	Safetyfactor		(1.50)

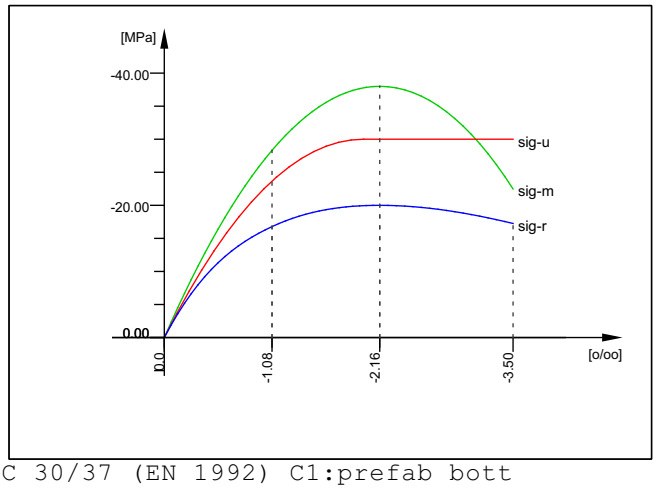

C 30/37 (EN 1992) C1:prefab bott

No. 20 C 30/37 (EN 1992) C2:crossbeam

Youngs-modulus	E	32837	[MPa]	Safetyfactor		1.50	[-]
Poisson-Ratio	mu	0.20	[-]	Strength	fc	30.00	[MPa]
Shear-modulus	G	13682	[MPa]	Nomin. strength	fck	30.00	[MPa]
Compression modulus		18243	[MPa]	Tens. strength	fctm	2.90	[MPa]
Weight		25.0	[kN/m3]	5 % t.strength	fctk	2.03	[MPa]
Density	rho	2350	[kg/m3]	95 % t.strength	fctk	3.77	[MPa]
Temp.elongat.coeff.		1.00E-05	[1/°K]	Bond strength	fbd	3.04	[MPa]
				Service strength		38.00	[MPa]
				Fatigue strength		17.60	[MPa]
				Ten.strngth fctd		1.35	[MPa]

	eps[o/oo]	sig-m[MPa]	E-t[MPa]
Stress-Strain for serviceability			
Is only valid within the defined	0.000	0.00	34478
stress range	-1.081	-28.31	17746
	-2.162	-38.00	0
	-3.500	-22.47	-23499
	Safetyfactor		1.50

	eps[o/oo]	sig-u[MPa]	E-t[MPa]
Stress-Strain for ultimate load			

SOFiSTiK AG - www.sofistik.de

Composite bridge 38+50+38, b=14.25m, 2x2HL1100R HISTAR460 , slab 0.30m C30/37

No. 20 C 30/37 (EN 1992) C2:crossbeam

Is only valid within the defined	0.000	0.00	30000
stress range	-2.000	-30.00	0
	-3.500	-30.00	0
	Safetyfactor		1.50
Stress-Strain of calc. mean values	eps[o/oo]	sig-r[MPa]	E-t[MPa]
Is only valid within the defined	0.000	0.00	28732
stress range	-1.081	-16.78	7018
	-2.162	-20.00	0
	-3.500	-17.25	-3601
	Safetyfactor		(1.50)

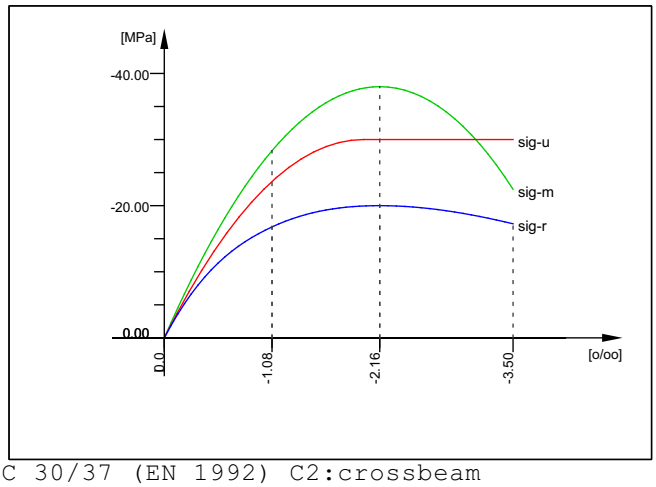

C 30/37 (EN 1992) C2:crossbeam

No. 21 C 30/37 (EN 1992) C2:crossbeam c

Youngs-modulus	E	0	[MPa]	Safetyfactor		1.50	[-]
Poisson-Ratio	mu	0.20	[-]	Strength	fc	30.00	[MPa]
Shear-modulus	G	0	[MPa]	Nomin. strength	fck	30.00	[MPa]
Compression modulus		0	[MPa]	Tens. strength	fctm	2.90	[MPa]
Weight		25.0	[kN/m3]	5 % t.strength	fctk	2.03	[MPa]
Density	rho	2350	[kg/m3]	95 % t.strength	fctk	3.77	[MPa]
Temp.elongat.coeff.		1.00E-05	[1/°K]	Bond strength	fbd	3.04	[MPa]
				Service strength		38.00	[MPa]
				Fatigue strength		17.60	[MPa]
				Ten.strngth fctd		1.35	[MPa]

Stress-Strain for serviceability	eps[o/oo]	sig-m[MPa]	E-t[MPa]
Is only valid within the defined	0.000	0.00	34478
stress range	-1.081	-28.31	17746
	-2.162	-38.00	0
	-3.500	-22.47	-23499
	Safetyfactor		1.50
Stress-Strain for ultimate load	eps[o/oo]	sig-u[MPa]	E-t[MPa]
Is only valid within the defined	0.000	0.00	30000
stress range	-2.000	-30.00	0
	-3.500	-30.00	0
	Safetyfactor		1.50
Stress-Strain of calc. mean values	eps[o/oo]	sig-r[MPa]	E-t[MPa]
Is only valid within the defined	0.000	0.00	28732
stress range	-1.081	-16.78	7018
	-2.162	-20.00	0
	-3.500	-17.25	-3601
	Safetyfactor		(1.50)

SOFiSTiK AG - www.sofistik.de

Composite bridge 38+50+38, b=14.25m, 2x2HL1100R HISTAR460 , slab 0.30m C30/37

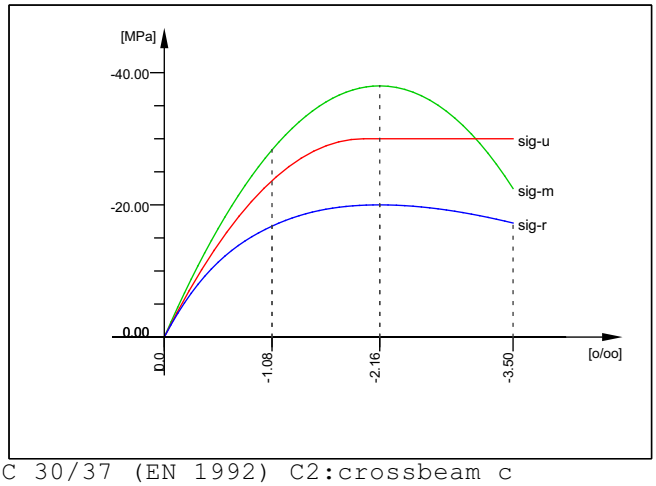

C 30/37 (EN 1992) C2:crossbeam c

No. 22 C 30/37 (EN 1992) C2:crossbeam g

Youngs-modulus	E	32837	[MPa]	Safetyfactor		1.50	[-]
Poisson-Ratio	mu	0.20	[-]	Strength	fc	30.00	[MPa]
Shear-modulus	G	13682	[MPa]	Nomin. strength	fck	30.00	[MPa]
Compression modulus		18243	[MPa]	Tens. strength	fctm	2.90	[MPa]
Weight		0.0	[kN/m3]	5 % t.strength	fctk	2.03	[MPa]
Density	rho	0	[kg/m3]	95 % t.strength	fctk	3.77	[MPa]
Temp.elongat.coeff.		1.00E-05	[1/°K]	Bond strength	fbd	3.04	[MPa]
				Service strength		38.00	[MPa]
				Fatigue strength		17.60	[MPa]
				Ten.strngth fctd		1.35	[MPa]

Stress-Strain for serviceability
Is only valid within the defined
stress range

eps[o/oo]	sig-m[MPa]	E-t[MPa]
0.000	0.00	34478
-1.081	-28.31	17746
-2.162	-38.00	0
-3.500	-22.47	-23499

Safetyfactor 1.50

Stress-Strain for ultimate load
Is only valid within the defined
stress range

eps[o/oo]	sig-u[MPa]	E-t[MPa]
0.000	0.00	30000
-2.000	-30.00	0
-3.500	-30.00	0

Safetyfactor 1.50

Stress-Strain of calc. mean values
Is only valid within the defined
stress range

eps[o/oo]	sig-r[MPa]	E-t[MPa]
0.000	0.00	28732
-1.081	-16.78	7018
-2.162	-20.00	0
-3.500	-17.25	-3601

Safetyfactor (1.50)

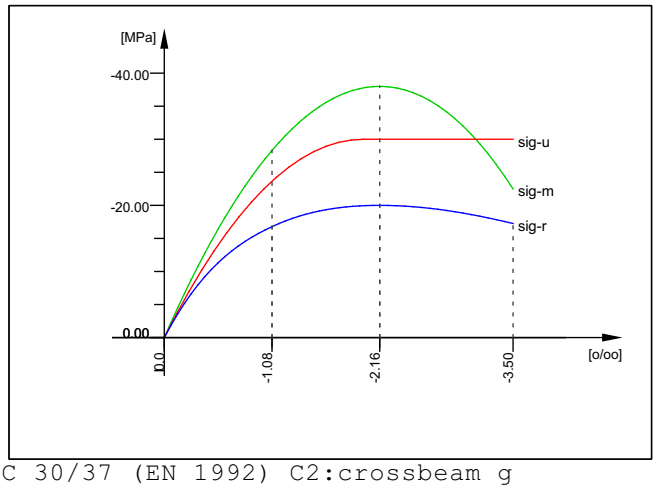

C 30/37 (EN 1992) C2:crossbeam g

SOFiSTiK AG - www.sofistik.de

Composite bridge 38+50+38, b=14.25m, 2x2HL1100R HISTAR460 , slab 0.30m C30/37

No. 23 C 30/37 (EN 1992) C2:miedzybetci

Youngs-modulus	E	0	[MPa]	Safetyfactor		1.50	[-]
Poisson-Ratio	mu	0.20	[-]	Strength	fc	30.00	[MPa]
Shear-modulus	G	0	[MPa]	Nomin. strength	fck	30.00	[MPa]
Compression modulus		0	[MPa]	Tens. strength	fctm	2.90	[MPa]
Weight		2000.0	[kN/m3]	5 % t.strength	fctk	2.03	[MPa]
Density	rho	199850	[kg/m3]	95 % t.strength	fctk	3.77	[MPa]
Temp.elongat.coeff.		1.00E-05	[1/°K]	Bond strength	fbd	3.04	[MPa]
				Service strength		38.00	[MPa]
				Fatigue strength		17.60	[MPa]
				Ten.strngth fctd		1.35	[MPa]

Stress-Strain for serviceability
Is only valid within the defined
stress range

eps[o/oo]	sig-m[MPa]	E-t[MPa]
0.000	0.00	34478
-1.081	-28.31	17746
-2.162	-38.00	0
-3.500	-22.47	-23499

Safetyfactor 1.50

Stress-Strain for ultimate load
Is only valid within the defined
stress range

eps[o/oo]	sig-u[MPa]	E-t[MPa]
0.000	0.00	30000
-2.000	-30.00	0
-3.500	-30.00	0

Safetyfactor 1.50

Stress-Strain of calc. mean values
Is only valid within the defined
stress range

eps[o/oo]	sig-r[MPa]	E-t[MPa]
0.000	0.00	28732
-1.081	-16.78	7018
-2.162	-20.00	0
-3.500	-17.25	-3601

Safetyfactor (1.50)

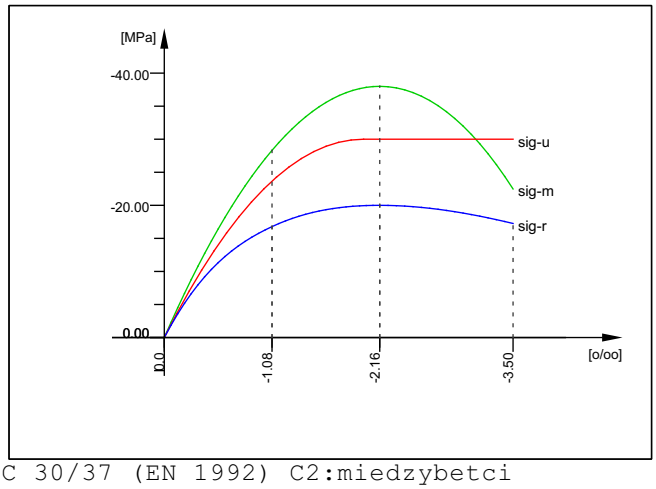

C 30/37 (EN 1992) C2:miedzybetci

No. 24 C 30/37 (EN 1992) C2:miedzybetle

Youngs-modulus	E	0	[MPa]	Safetyfactor		1.50	[-]
Poisson-Ratio	mu	0.20	[-]	Strength	fc	30.00	[MPa]
Shear-modulus	G	0	[MPa]	Nomin. strength	fck	30.00	[MPa]
Compression modulus		0	[MPa]	Tens. strength	fctm	2.90	[MPa]
Weight		0.0	[kN/m3]	5 % t.strength	fctk	2.03	[MPa]
Density	rho	0	[kg/m3]	95 % t.strength	fctk	3.77	[MPa]
Temp.elongat.coeff.		1.00E-05	[1/°K]	Bond strength	fbd	3.04	[MPa]
				Service strength		38.00	[MPa]
				Fatigue strength		17.60	[MPa]
				Ten.strngth fctd		1.35	[MPa]

Stress-Strain for serviceability
Is only valid within the defined
stress range

eps[o/oo]	sig-m[MPa]	E-t[MPa]
0.000	0.00	34478
-1.081	-28.31	17746
-2.162	-38.00	0
-3.500	-22.47	-23499

Safetyfactor 1.50

Stress-Strain for ultimate load

eps[o/oo]	sig-u[MPa]	E-t[MPa]

SOFiSTiK AG - www.sofistik.de

Composite bridge 38+50+38, b=14.25m, 2x2HL1100R HISTAR460 , slab 0.30m C30/37

No. 24 C 30/37 (EN 1992) C2:miedzybetle

Is only valid within the defined	0.000	0.00	30000
stress range	-2.000	-30.00	0
	-3.500	-30.00	0
	Safetyfactor		1.50
Stress-Strain of calc. mean values	eps[o/oo]	sig-r[MPa]	E-t[MPa]
Is only valid within the defined	0.000	0.00	28732
stress range	-1.081	-16.78	7018
	-2.162	-20.00	0
	-3.500	-17.25	-3601
	Safetyfactor		(1.50)

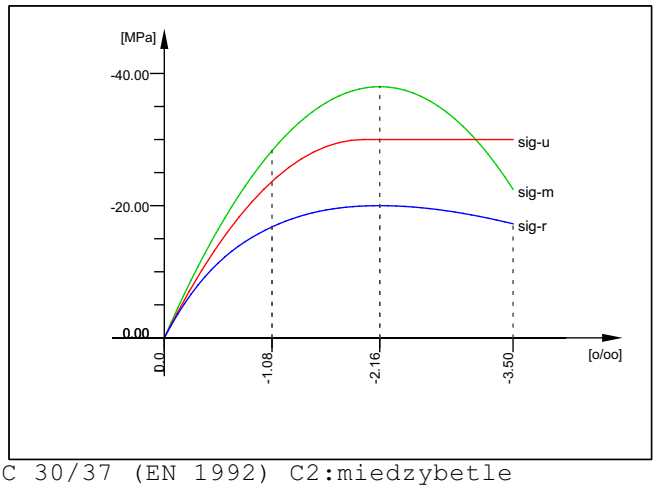

C 30/37 (EN 1992) C2:miedzybetle

No. 25 C 30/37 (EN 1992) C2:bottom conc

Youngs-modulus	E	10667	[MPa]	Safetyfactor		1.50	[-]
Poisson-Ratio	mu	0.20	[-]	Strength	fc	30.00	[MPa]
Shear-modulus	G	4444	[MPa]	Nomin. strength	fck	30.00	[MPa]
Compression modulus		5926	[MPa]	Tens. strength	fctm	2.90	[MPa]
Weight		25.0	[kN/m3]	5 % t.strength	fctk	2.03	[MPa]
Density	rho	2350	[kg/m3]	95 % t.strength	fctk	3.77	[MPa]
Temp.elongat.coeff.		1.00E-05	[1/°K]	Bond strength	fbd	3.04	[MPa]
				Service strength		38.00	[MPa]
				Fatigue strength		17.60	[MPa]
				Ten.strngth fctd		1.35	[MPa]

Stress-Strain for serviceability	eps[o/oo]	sig-m[MPa]	E-t[MPa]
Is only valid within the defined	0.000	0.00	34478
stress range	-1.081	-28.31	17746
	-2.162	-38.00	0
	-3.500	-22.47	-23499
	Safetyfactor		1.50
Stress-Strain for ultimate load	eps[o/oo]	sig-u[MPa]	E-t[MPa]
Is only valid within the defined	0.000	0.00	30000
stress range	-2.000	-30.00	0
	-3.500	-30.00	0
	Safetyfactor		1.50
Stress-Strain of calc. mean values	eps[o/oo]	sig-r[MPa]	E-t[MPa]
Is only valid within the defined	0.000	0.00	28732
stress range	-1.081	-16.78	7018
	-2.162	-20.00	0
	-3.500	-17.25	-3601
	Safetyfactor		(1.50)

SOFiSTiK AG - www.sofistik.de

Composite bridge 38+50+38, b=14.25m, 2x2HL1100R HISTAR460 , slab 0.30m C30/37

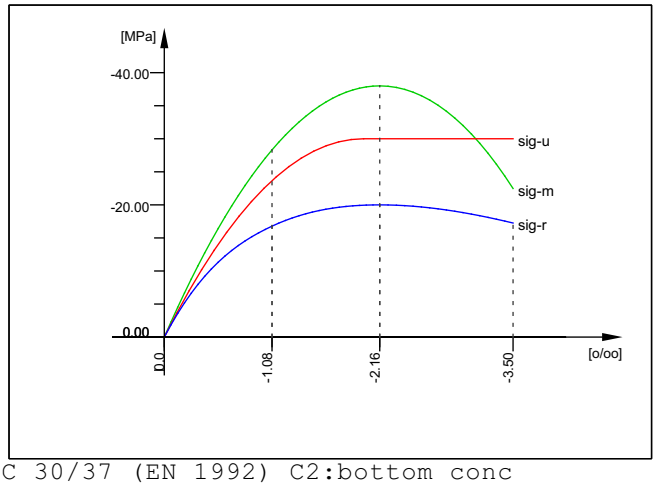

C 30/37 (EN 1992) C2:bottom conc

No. 30 C 30/37 (EN 1992) C3:insitu slab

Youngs-modulus	E	32837	[MPa]	Safetyfactor		1.50	[-]
Poisson-Ratio	mu	0.20	[-]	Strength	fc	30.00	[MPa]
Shear-modulus	G	13682	[MPa]	Nomin. strength	fck	30.00	[MPa]
Compression modulus		18243	[MPa]	Tens. strength	fctm	2.90	[MPa]
Weight		25.0	[kN/m3]	5 % t.strength	fctk	2.03	[MPa]
Density	rho	2350	[kg/m3]	95 % t.strength	fctk	3.77	[MPa]
Temp.elongat.coeff.		1.00E-05	[1/°K]	Bond strength	fbd	3.04	[MPa]
				Service strength		38.00	[MPa]
				Fatigue strength		17.60	[MPa]
				Ten.strngth fctd		1.35	[MPa]

Stress-Strain for serviceability
Is only valid within the defined
stress range

eps[o/oo]	sig-m[MPa]	E-t[MPa]
0.000	0.00	34478
-1.081	-28.31	17746
-2.162	-38.00	0
-3.500	-22.47	-23499

Safetyfactor 1.50

Stress-Strain for ultimate load
Is only valid within the defined
stress range

eps[o/oo]	sig-u[MPa]	E-t[MPa]
0.000	0.00	30000
-2.000	-30.00	0
-3.500	-30.00	0

Safetyfactor 1.50

Stress-Strain of calc. mean values
Is only valid within the defined
stress range

eps[o/oo]	sig-r[MPa]	E-t[MPa]
0.000	0.00	28732
-1.081	-16.78	7018
-2.162	-20.00	0
-3.500	-17.25	-3601

Safetyfactor (1.50)

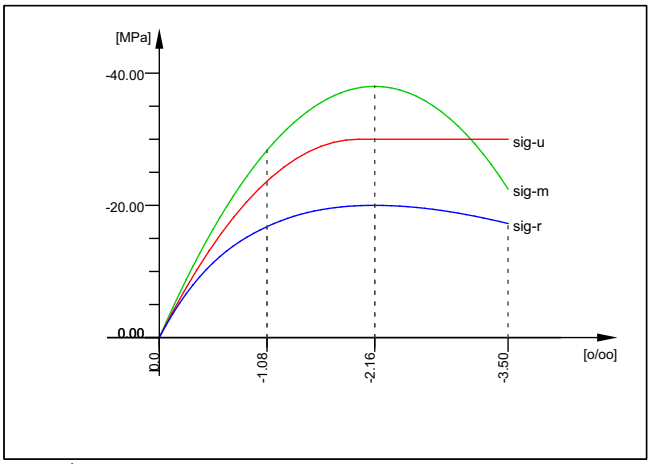

C 30/37 (EN 1992) C3:insitu slab

SOFiSTiK AG - www.sofistik.de

Composite bridge 38+50+38, b=14.25m, 2x2HL1100R HISTAR460 , slab 0.30m C30/37

No. 31 C 30/37 (EN 1992) C3:insitu slab

Youngs-modulus	E	0	[MPa]	Safetyfactor		1.50	[-]
Poisson-Ratio	mu	0.20	[-]	Strength	fc	30.00	[MPa]
Shear-modulus	G	0	[MPa]	Nomin. strength	fck	30.00	[MPa]
Compression modulus		0	[MPa]	Tens. strength	fctm	2.90	[MPa]
Weight		25.0	[kN/m3]	5 % t.strength	fctk	2.03	[MPa]
Density	rho	2350	[kg/m3]	95 % t.strength	fctk	3.77	[MPa]
Temp.elongat.coeff.		1.00E-05	[1/°K]	Bond strength	fbd	3.04	[MPa]
				Service strength		38.00	[MPa]
				Fatigue strength		17.60	[MPa]
				Ten.strngth fctd		1.35	[MPa]

	eps[o/oo]	sig-m[MPa]	E-t[MPa]
Stress-Strain for serviceability			
Is only valid within the defined	0.000	0.00	34478
stress range	-1.081	-28.31	17746
	-2.162	-38.00	0
	-3.500	-22.47	-23499
	Safetyfactor		1.50

	eps[o/oo]	sig-u[MPa]	E-t[MPa]
Stress-Strain for ultimate load			
Is only valid within the defined	0.000	0.00	30000
stress range	-2.000	-30.00	0
	-3.500	-30.00	0
	Safetyfactor		1.50

	eps[o/oo]	sig-r[MPa]	E-t[MPa]
Stress-Strain of calc. mean values			
Is only valid within the defined	0.000	0.00	28732
stress range	-1.081	-16.78	7018
	-2.162	-20.00	0
	-3.500	-17.25	-3601
	Safetyfactor		(1.50)

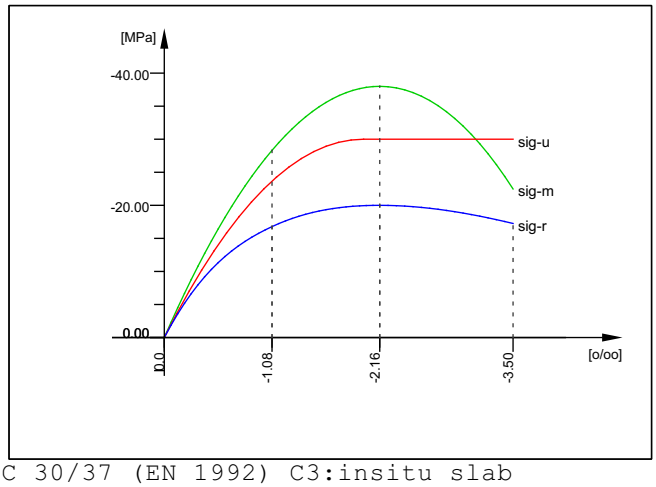

C 30/37 (EN 1992) C3:insitu slab

No. 32 C 30/37 (EN 1992) C3:insitu slab

Youngs-modulus	E	32837	[MPa]	Safetyfactor		1.50	[-]
Poisson-Ratio	mu	0.20	[-]	Strength	fc	30.00	[MPa]
Shear-modulus	G	13682	[MPa]	Nomin. strength	fck	30.00	[MPa]
Compression modulus		18243	[MPa]	Tens. strength	fctm	2.90	[MPa]
Weight		0.0	[kN/m3]	5 % t.strength	fctk	2.03	[MPa]
Density	rho	0	[kg/m3]	95 % t.strength	fctk	3.77	[MPa]
Temp.elongat.coeff.		1.00E-05	[1/°K]	Bond strength	fbd	3.04	[MPa]
				Service strength		38.00	[MPa]
				Fatigue strength		17.60	[MPa]
				Ten.strngth fctd		1.35	[MPa]

	eps[o/oo]	sig-m[MPa]	E-t[MPa]
Stress-Strain for serviceability			
Is only valid within the defined	0.000	0.00	34478
stress range	-1.081	-28.31	17746
	-2.162	-38.00	0
	-3.500	-22.47	-23499
	Safetyfactor		1.50

	eps[o/oo]	sig-u[MPa]	E-t[MPa]
Stress-Strain for ultimate load			

SOFiSTiK AG - www.sofistik.de

Composite bridge 38+50+38, b=14.25m, 2x2HL1100R HISTAR460 , slab 0.30m C30/37

No. 32 C 30/37 (EN 1992) C3:insitu slab

Is only valid within the defined	0.000	0.00	30000
stress range	-2.000	-30.00	0
	-3.500	-30.00	0
	Safetyfactor		1.50
Stress-Strain of calc. mean values	eps[o/oo]	sig-r[MPa]	E-t[MPa]
Is only valid within the defined	0.000	0.00	28732
stress range	-1.081	-16.78	7018
	-2.162	-20.00	0
	-3.500	-17.25	-3601
	Safetyfactor		(1.50)

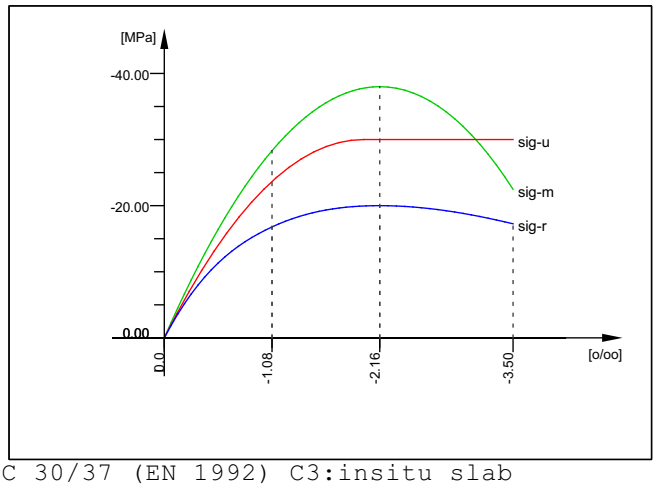

C 30/37 (EN 1992) C3:insitu slab

No. 40 C 30/37 (EN 1992) C4:slab transv

Youngs-modulus	E	32837	[MPa]	Safetyfactor		1.50	[-]
Poisson-Ratio	mu	0.20	[-]	Strength	fc	30.00	[MPa]
Shear-modulus	G	13682	[MPa]	Nomin. strength	fck	30.00	[MPa]
Compression modulus		18243	[MPa]	Tens. strength	fctm	2.90	[MPa]
Weight		25.0	[kN/m3]	5 % t.strength	fctk	2.03	[MPa]
Density	rho	2350	[kg/m3]	95 % t.strength	fctk	3.77	[MPa]
Temp.elongat.coeff.		1.00E-05	[1/°K]	Bond strength	fbd	3.04	[MPa]
				Service strength		38.00	[MPa]
				Fatigue strength		17.60	[MPa]
				Ten.strngth fctd		1.35	[MPa]

Stress-Strain for serviceability	eps[o/oo]	sig-m[MPa]	E-t[MPa]
Is only valid within the defined	0.000	0.00	34478
stress range	-1.081	-28.31	17746
	-2.162	-38.00	0
	-3.500	-22.47	-23499
	Safetyfactor		1.50
Stress-Strain for ultimate load	eps[o/oo]	sig-u[MPa]	E-t[MPa]
Is only valid within the defined	0.000	0.00	30000
stress range	-2.000	-30.00	0
	-3.500	-30.00	0
	Safetyfactor		1.50
Stress-Strain of calc. mean values	eps[o/oo]	sig-r[MPa]	E-t[MPa]
Is only valid within the defined	0.000	0.00	28732
stress range	-1.081	-16.78	7018
	-2.162	-20.00	0
	-3.500	-17.25	-3601
	Safetyfactor		(1.50)

SOFiSTiK AG - www.sofistik.de

Composite bridge 38+50+38, b=14.25m, 2x2HL1100R HISTAR460 , slab 0.30m C30/37

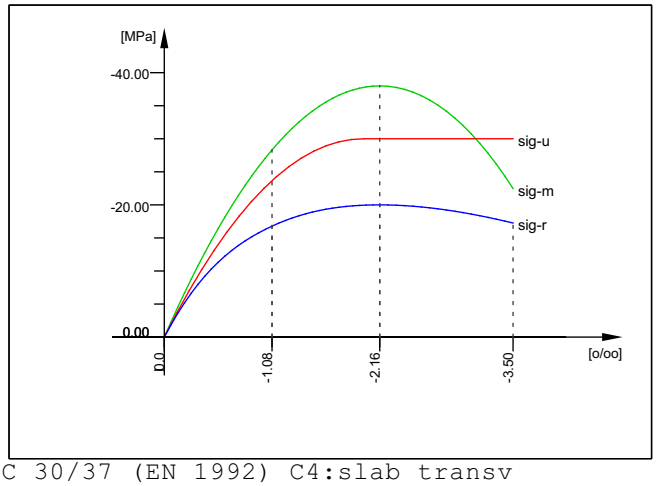

C 30/37 (EN 1992) C4:slab transv

No. 42 C 30/37 (EN 1992) C4:slab trans.

Youngs-modulus	E	32837	[MPa]	Safetyfactor		1.50	[-]
Poisson-Ratio	mu	0.20	[-]	Strength	fc	30.00	[MPa]
Shear-modulus	G	13682	[MPa]	Nomin. strength	fck	30.00	[MPa]
Compression modulus		18243	[MPa]	Tens. strength	fctm	2.90	[MPa]
Weight		0.0	[kN/m3]	5 % t.strength	fctk	2.03	[MPa]
Density	rho	0	[kg/m3]	95 % t.strength	fctk	3.77	[MPa]
Temp.elongat.coeff.		1.00E-05	[1/°K]	Bond strength	fbd	3.04	[MPa]
				Service strength		38.00	[MPa]
				Fatigue strength		17.60	[MPa]
				Ten.strngth fctd		1.35	[MPa]

Stress-Strain for serviceability
Is only valid within the defined
stress range

eps[o/oo]	sig-m[MPa]	E-t[MPa]
0.000	0.00	34478
-1.081	-28.31	17746
-2.162	-38.00	0
-3.500	-22.47	-23499

Safetyfactor 1.50

Stress-Strain for ultimate load
Is only valid within the defined
stress range

eps[o/oo]	sig-u[MPa]	E-t[MPa]
0.000	0.00	30000
-2.000	-30.00	0
-3.500	-30.00	0

Safetyfactor 1.50

Stress-Strain of calc. mean values
Is only valid within the defined
stress range

eps[o/oo]	sig-r[MPa]	E-t[MPa]
0.000	0.00	28732
-1.081	-16.78	7018
-2.162	-20.00	0
-3.500	-17.25	-3601

Safetyfactor (1.50)

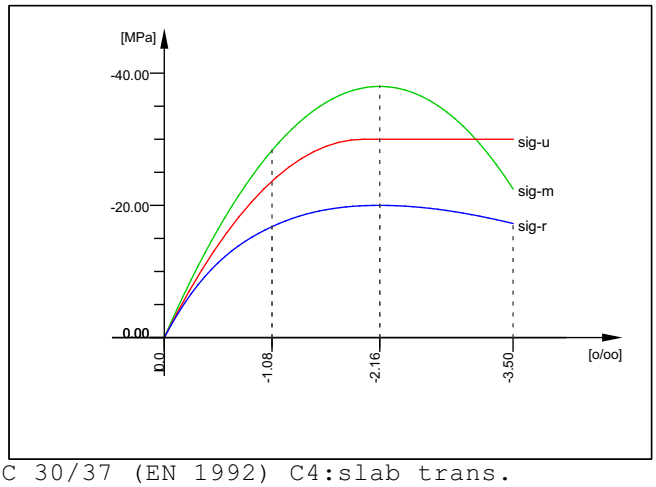

C 30/37 (EN 1992) C4:slab trans.

SOFiSTiK AG - www.sofistik.de

Composite bridge 38+50+38, b=14.25m, 2x2HL1100R HISTAR460 , slab 0.30m C30/37

No. 50 C 30/37 (EN 1992) C5:supports

Youngs-modulus	E	32837	[MPa]	Safetyfactor		1.50	[-]
Poisson-Ratio	mu	0.20	[-]	Strength	fc	30.00	[MPa]
Shear-modulus	G	13682	[MPa]	Nomin. strength	fck	30.00	[MPa]
Compression modulus		18243	[MPa]	Tens. strength	fctm	2.90	[MPa]
Weight		25.0	[kN/m3]	5 % t.strength	fctk	2.03	[MPa]
Density	rho	2350	[kg/m3]	95 % t.strength	fctk	3.77	[MPa]
Temp.elongat.coeff.		1.00E-05	[1/°K]	Bond strength	fbd	3.04	[MPa]
				Service strength		38.00	[MPa]
				Fatigue strength		17.60	[MPa]
				Ten.strngth fctd		1.35	[MPa]

	eps[o/oo]	sig-m[MPa]	E-t[MPa]
Stress-Strain for serviceability			
Is only valid within the defined	0.000	0.00	34478
stress range	-1.081	-28.31	17746
	-2.162	-38.00	0
	-3.500	-22.47	-23499
	Safetyfactor		1.50

	eps[o/oo]	sig-u[MPa]	E-t[MPa]
Stress-Strain for ultimate load			
Is only valid within the defined	0.000	0.00	30000
stress range	-2.000	-30.00	0
	-3.500	-30.00	0
	Safetyfactor		1.50

	eps[o/oo]	sig-r[MPa]	E-t[MPa]
Stress-Strain of calc. mean values			
Is only valid within the defined	0.000	0.00	28732
stress range	-1.081	-16.78	7018
	-2.162	-20.00	0
	-3.500	-17.25	-3601
	Safetyfactor		(1.50)

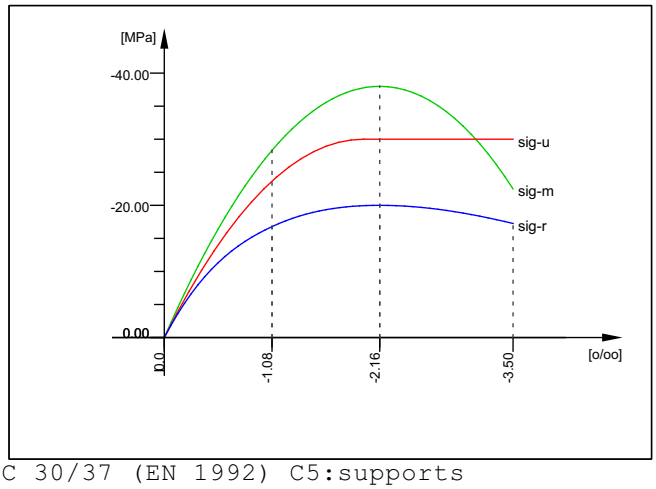

C 30/37 (EN 1992) C5:supports

No. 52 C 30/37 (EN 1992) C5:supports ga

Youngs-modulus	E	32837	[MPa]	Safetyfactor		1.50	[-]
Poisson-Ratio	mu	0.20	[-]	Strength	fc	30.00	[MPa]
Shear-modulus	G	13682	[MPa]	Nomin. strength	fck	30.00	[MPa]
Compression modulus		18243	[MPa]	Tens. strength	fctm	2.90	[MPa]
Weight		0.0	[kN/m3]	5 % t.strength	fctk	2.03	[MPa]
Density	rho	0	[kg/m3]	95 % t.strength	fctk	3.77	[MPa]
Temp.elongat.coeff.		1.00E-05	[1/°K]	Bond strength	fbd	3.04	[MPa]
				Service strength		38.00	[MPa]
				Fatigue strength		17.60	[MPa]
				Ten.strngth fctd		1.35	[MPa]

	eps[o/oo]	sig-m[MPa]	E-t[MPa]
Stress-Strain for serviceability			
Is only valid within the defined	0.000	0.00	34478
stress range	-1.081	-28.31	17746
	-2.162	-38.00	0
	-3.500	-22.47	-23499
	Safetyfactor		1.50

	eps[o/oo]	sig-u[MPa]	E-t[MPa]
Stress-Strain for ultimate load			

SOFiSTiK AG - www.sofistik.de

Composite bridge 38+50+38, b=14.25m, 2x2HL1100R HISTAR460 , slab 0.30m C30/37

No. 52 C 30/37 (EN 1992) C5:supports ga

Is only valid within the defined stress range

0.000	0.00	30000
-2.000	-30.00	0
-3.500	-30.00	0
Safetyfactor		1.50

Stress-Strain of calc. mean values
Is only valid within the defined stress range

eps[o/oo]	sig-r[MPa]	E-t[MPa]
0.000	0.00	28732
-1.081	-16.78	7018
-2.162	-20.00	0
-3.500	-17.25	-3601
Safetyfactor		(1.50)

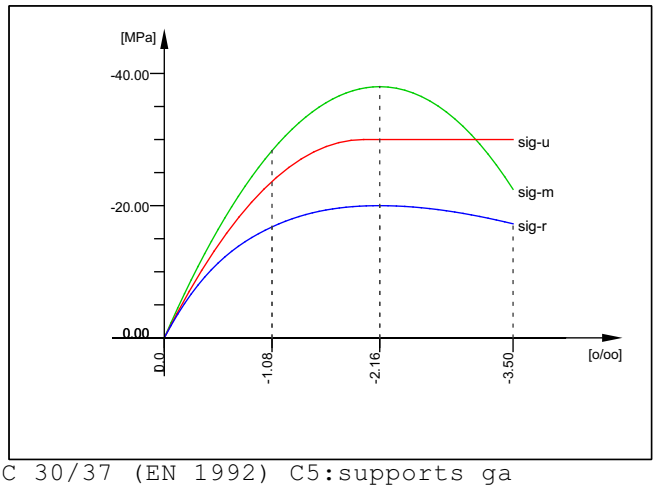

C 30/37 (EN 1992) C5:supports ga

No.100 B 500 B (EN 1992) R1:Bst500

Youngs-modulus	E	200000	[MPa]	Safetyfactor		1.15 [-]
Poisson-Ratio	mu	0.30	[-]	Yield stress	fy	500.00 [MPa]
Shear-modulus	G	76923	[MPa]	Compr.yield val.	fyc	500.00 [MPa]
Compression modulus		166667	[MPa]	Tens. strength	ft	550.00 [MPa]
Weight		0.0	[kN/m3]	Compr. strength	fc	550.00 [MPa]
Density	rho	0	[kg/m3]	Ultim. plast. strain		50.00 [o/oo]
Temp.elongat.coeff.		1.20E-05	[1/°K]	relative bond coeff.		1.00 [-]
max. thickness		32.00	[mm]	EC2 bondcoeff. K1		0.80 [-]
				Hardening modulus		0.00 [MPa]
				Proportional limit		500.00 [MPa]
				Dynamic stress range		152.17 [MPa]

Stress-Strain for serviceability
Is also extended beyond the defined stress range

eps[o/oo]	sig-m[MPa]	E-t[MPa]
1000.000	550.00	0
50.000	550.00	0
2.500	500.00	1053
0.000	0.00	200000
-2.500	-500.00	1053
-50.000	-550.00	0
-1000.000	-550.00	0
Safetyfactor		1.15

Stress-Strain for ultimate load
Is also extended beyond the defined stress range

eps[o/oo]	sig-u[MPa]	E-t[MPa]
1000.000	478.26	0
50.000	478.26	0
2.174	434.78	909
0.000	0.00	200000
-2.174	-434.78	909
-50.000	-478.26	0
-1000.000	-478.26	0
Safetyfactor		(1.15)

SOFiSTiK AG - www.sofistik.de

Composite bridge 38+50+38, b=14.25m, 2x2HL1100R HISTAR460 , slab 0.30m C30/37

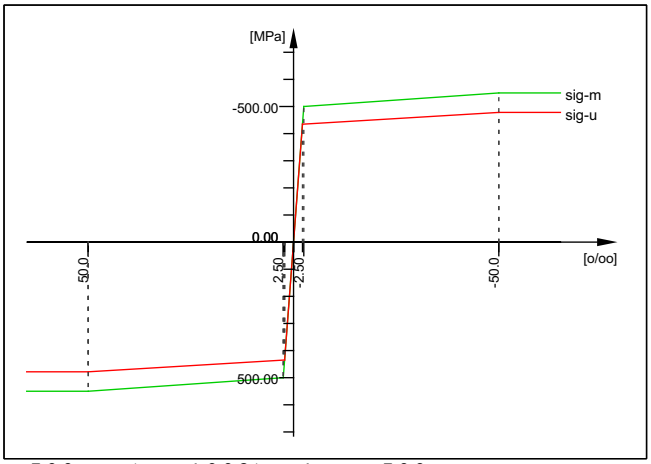

B 500 B (EN 1992) R1:Bst500

No.200 B 500 B (EN 1992) R2:Bst500

Youngs-modulus	E	200000	[MPa]	Safetyfactor		1.15	[-]
Poisson-Ratio	mu	0.30	[-]	Yield stress	fy	500.00	[MPa]
Shear-modulus	G	76923	[MPa]	Compr.yield val.	fyc	500.00	[MPa]
Compression modulus		166667	[MPa]	Tens. strength	ft	550.00	[MPa]
Weight		0.0	[kN/m3]	Compr. strength	fc	550.00	[MPa]
Density	rho	0	[kg/m3]	Ultim. plast. strain		50.00	[o/oo]
Temp.elongat.coeff.		1.20E-05	[1/°K]	relative bond coeff.		1.00	[-]
max. thickness		32.00	[mm]	EC2 bondcoeff. K1		0.80	[-]
				Hardening modulus		0.00	[MPa]
				Proportional limit		500.00	[MPa]
				Dynamic stress range		152.17	[MPa]

Stress-Strain for serviceability
Is also extended beyond the
defined stress range

eps[o/oo]	sig-m[MPa]	E-t[MPa]
1000.000	550.00	0
50.000	550.00	0
2.500	500.00	1053
0.000	0.00	200000
-2.500	-500.00	1053
-50.000	-550.00	0
-1000.000	-550.00	0
Safetyfactor		1.15

Stress-Strain for ultimate load
Is also extended beyond the
defined stress range

eps[o/oo]	sig-u[MPa]	E-t[MPa]
1000.000	478.26	0
50.000	478.26	0
2.174	434.78	909
0.000	0.00	200000
-2.174	-434.78	909
-50.000	-478.26	0
-1000.000	-478.26	0
Safetyfactor		(1.15)

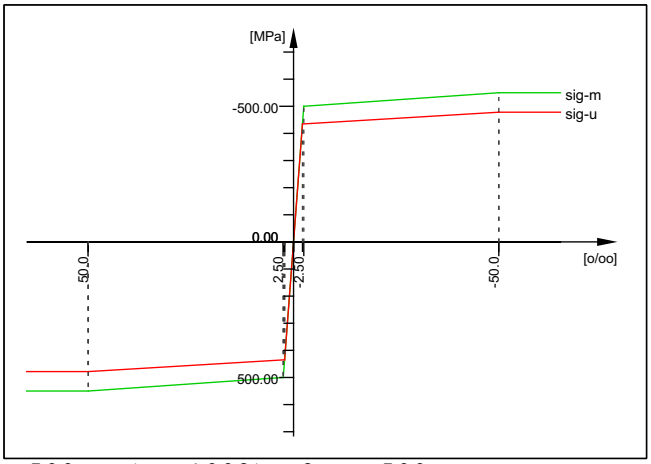

B 500 B (EN 1992) R2:Bst500

SOFiSTiK AG - www.sofistik.de

Composite bridge 38+50+38, b=14.25m, 2x2HL1100R HISTAR460 , slab 0.30m C30/37

No.210 B 500 B (EN 1992) R2:Bst500

Youngs-modulus	E	200000	[MPa]	Safetyfactor		1.15	[-]
Poisson-Ratio	mu	0.30	[-]	Yield stress	fy	500.00	[MPa]
Shear-modulus	G	76923	[MPa]	Compr.yield val.	fyc	500.00	[MPa]
Compression modulus		166667	[MPa]	Tens. strength	ft	550.00	[MPa]
Weight		0.0	[kN/m3]	Compr. strength	fc	550.00	[MPa]
Density	rho	0	[kg/m3]	Ultim. plast. strain		50.00	[o/oo]
Temp.elongat.coeff.		1.20E-05	[1/°K]	relative bond coeff.		1.00	[-]
max. thickness		32.00	[mm]	EC2 bondcoeff. K1		0.80	[-]
				Hardening modulus		0.00	[MPa]
				Proportional limit		500.00	[MPa]
				Dynamic stress range		152.17	[MPa]

Stress-Strain for serviceability
Is also extended beyond the
defined stress range

eps[o/oo]	sig-m[MPa]	E-t[MPa]
1000.000	550.00	0
50.000	550.00	0
2.500	500.00	1053
0.000	0.00	200000
-2.500	-500.00	1053
-50.000	-550.00	0
-1000.000	-550.00	0
Safetyfactor		1.15

Stress-Strain for ultimate load
Is also extended beyond the
defined stress range

eps[o/oo]	sig-u[MPa]	E-t[MPa]
1000.000	478.26	0
50.000	478.26	0
2.174	434.78	909
0.000	0.00	200000
-2.174	-434.78	909
-50.000	-478.26	0
-1000.000	-478.26	0
Safetyfactor		(1.15)

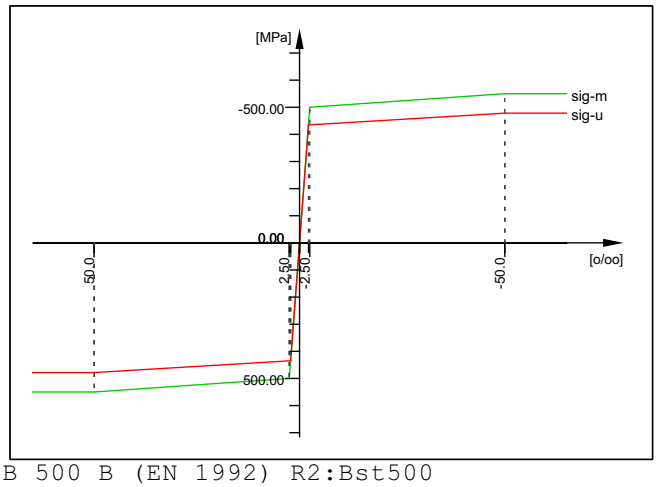

B 500 B (EN 1992) R2:Bst500

No.300 B 500 B (EN 1992) R3:Bst500

Youngs-modulus	E	200000	[MPa]	Safetyfactor		1.15	[-]
Poisson-Ratio	mu	0.30	[-]	Yield stress	fy	500.00	[MPa]
Shear-modulus	G	76923	[MPa]	Compr.yield val.	fyc	500.00	[MPa]
Compression modulus		166667	[MPa]	Tens. strength	ft	550.00	[MPa]
Weight		0.0	[kN/m3]	Compr. strength	fc	550.00	[MPa]
Density	rho	0	[kg/m3]	Ultim. plast. strain		50.00	[o/oo]
Temp.elongat.coeff.		1.20E-05	[1/°K]	relative bond coeff.		1.00	[-]
max. thickness		32.00	[mm]	EC2 bondcoeff. K1		0.80	[-]
				Hardening modulus		0.00	[MPa]
				Proportional limit		500.00	[MPa]
				Dynamic stress range		152.17	[MPa]

Stress-Strain for serviceability
Is also extended beyond the
defined stress range

eps[o/oo]	sig-m[MPa]	E-t[MPa]
1000.000	550.00	0
50.000	550.00	0
2.500	500.00	1053

SOFiSTiK AG - www.sofistik.de

Composite bridge 38+50+38, b=14.25m, 2x2HL1100R HISTAR460 , slab 0.30m C30/37

No.300 B 500 B (EN 1992) R3:Bst500

	0.000	0.00	200000
	-2.500	-500.00	1053
	-50.000	-550.00	0
	-1000.000	-550.00	0
	Safetyfactor		1.15
Stress-Strain for ultimate load	eps[o/oo]	sig-u[MPa]	E-t[MPa]
Is also extended beyond the	1000.000	478.26	0
defined stress range	50.000	478.26	0
	2.174	434.78	909
	0.000	0.00	200000
	-2.174	-434.78	909
	-50.000	-478.26	0
	-1000.000	-478.26	0
	Safetyfactor		(1.15)

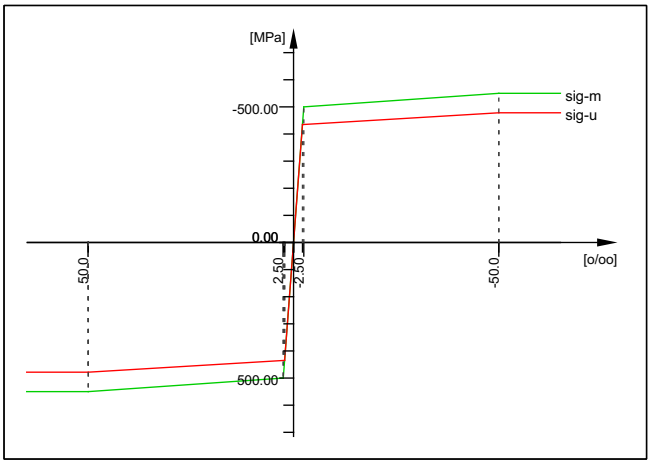

B 500 B (EN 1992) R3:Bst500

No.400 B 500 B (EN 1992) R4:Bst500

Youngs-modulus	E	200000	[MPa]	Safetyfactor		1.15 [-]
Poisson-Ratio	mu	0.30	[-]	Yield stress	fy	500.00 [MPa]
Shear-modulus	G	76923	[MPa]	Compr.yield val.	fyc	500.00 [MPa]
Compression modulus		166667	[MPa]	Tens. strength	ft	550.00 [MPa]
Weight		0.0	[kN/m3]	Compr. strength	fc	550.00 [MPa]
Density	rho	0	[kg/m3]	Ultim. plast. strain		50.00 [o/oo]
Temp.elongat.coeff.		1.20E-05	[1/°K]	relative bond coeff.		1.00 [-]
max. thickness		32.00	[mm]	EC2 bondcoeff. K1		0.80 [-]
				Hardening modulus		0.00 [MPa]
				Proportional limit		500.00 [MPa]
				Dynamic stress range		152.17 [MPa]

Stress-Strain for serviceability	eps[o/oo]	sig-m[MPa]	E-t[MPa]
Is also extended beyond the	1000.000	550.00	0
defined stress range	50.000	550.00	0
	2.500	500.00	1053
	0.000	0.00	200000
	-2.500	-500.00	1053
	-50.000	-550.00	0
	-1000.000	-550.00	0
	Safetyfactor		1.15
Stress-Strain for ultimate load	eps[o/oo]	sig-u[MPa]	E-t[MPa]
Is also extended beyond the	1000.000	478.26	0
defined stress range	50.000	478.26	0
	2.174	434.78	909
	0.000	0.00	200000
	-2.174	-434.78	909
	-50.000	-478.26	0
	-1000.000	-478.26	0
	Safetyfactor		(1.15)

SOFiSTiK AG - www.sofistik.de

Composite bridge 38+50+38, b=14.25m, 2x2HL1100R HISTAR460 , slab 0.30m C30/37

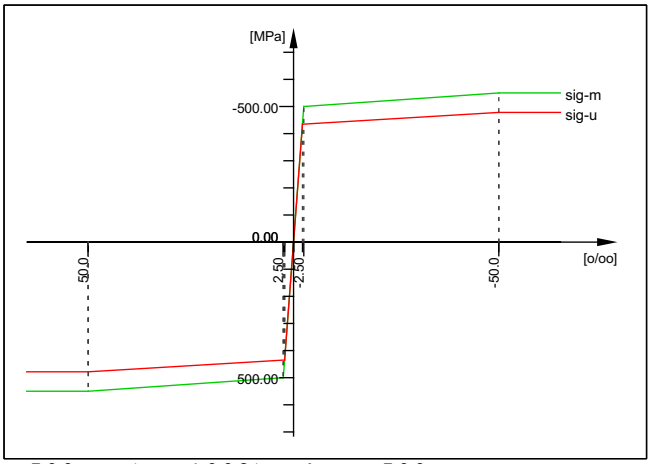

B 500 B (EN 1992) R4:Bst500

No.500 B 500 B (EN 1992) R5:Bst500

Youngs-modulus	E	200000	[MPa]	Safetyfactor		1.15 [-]
Poisson-Ratio	mu	0.30	[-]	Yield stress	fy	500.00 [MPa]
Shear-modulus	G	76923	[MPa]	Compr.yield val.	fyc	500.00 [MPa]
Compression modulus		166667	[MPa]	Tens. strength	ft	550.00 [MPa]
Weight		0.0	[kN/m3]	Compr. strength	fc	550.00 [MPa]
Density	rho	0	[kg/m3]	Ultim. plast. strain		50.00 [o/oo]
Temp.elongat.coeff.		1.20E-05	[1/°K]	relative bond coeff.		1.00 [-]
max. thickness		32.00	[mm]	EC2 bondcoeff. K1		0.80 [-]
				Hardening modulus		0.00 [MPa]
				Proportional limit		500.00 [MPa]
				Dynamic stress range		152.17 [MPa]

Stress-Strain for serviceability
Is also extended beyond the
defined stress range

eps[o/oo]	sig-m[MPa]	E-t[MPa]
1000.000	550.00	0
50.000	550.00	0
2.500	500.00	1053
0.000	0.00	200000
-2.500	-500.00	1053
-50.000	-550.00	0
-1000.000	-550.00	0
Safetyfactor		1.15

Stress-Strain for ultimate load
Is also extended beyond the
defined stress range

eps[o/oo]	sig-u[MPa]	E-t[MPa]
1000.000	478.26	0
50.000	478.26	0
2.174	434.78	909
0.000	0.00	200000
-2.174	-434.78	909
-50.000	-478.26	0
-1000.000	-478.26	0
Safetyfactor		(1.15)

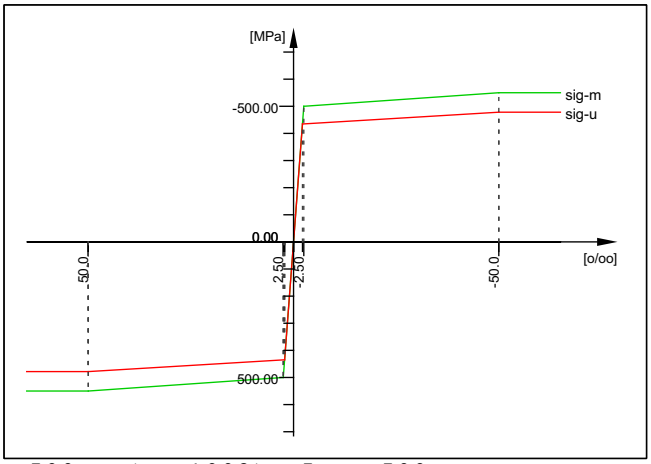

B 500 B (EN 1992) R5:Bst500

SOFiSTiK AG - www.sofistik.de

Composite bridge 38+50+38, b=14.25m, 2x2HL1100R HISTAR460 , slab 0.30m C30/37

Cross-sections static properties

No.	Mat NoR	A[m2] It[m4]	Ay/Az/Ayz [m2]	Iy/Iz/Iyz [m4]	ys/zs [m]	y/z-sc [m]	modules [MPa]	gam [kN/m]
10	=	B/H = 20 / 20 cm						
(CENT)	=	(D-As 20 / 20 mm)						
	50	4.0000E-02		1.333E-04	0.000	0.000	32837	1.00
	100	2.240E-04		1.333E-04	0.000	0.000	13682	
11	=	B/H = 394.2 / 131.4 cm						
(CENT)	=	(D-As 131.4 / 131.4 mm)						
	50	5.1798E+00		7.453E-01	0.000	0.000	32837	129.49
	100	2.352E+00		6.708E+00	0.000	0.000	13682	
12	=	B/H = 394.2 / 131.4 cm						
(CENT)	=	(D-As 131.4 / 131.4 mm)						
	50	5.1798E+00		7.453E-01	0.000	0.000	32837	129.49
	100	2.352E+00		6.708E+00	0.000	0.000	13682	
13	=	B/H = 394.2 / 131.4 cm						
(CENT)	=	(D-As 131.4 / 131.4 mm)						
	50	5.1798E+00		7.453E-01	0.000	0.000	32837	129.49
	100	2.352E+00		6.708E+00	0.000	0.000	13682	
14	=	B/H = 394.2 / 131.4 cm						
(CENT)	=	(D-As 131.4 / 131.4 mm)						
	50	5.1798E+00		7.453E-01	0.000	0.000	32837	129.49
	100	2.352E+00		6.708E+00	0.000	0.000	13682	
15	=	B/H = 394.2 / 131.4 cm						
(CENT)	=	(D-As 131.4 / 131.4 mm)						
	50	5.1798E+00		7.453E-01	0.000	0.000	32837	129.49
	100	2.352E+00		6.708E+00	0.000	0.000	13682	
16	=	B/H = 394.2 / 131.4 cm						
(CENT)	=	(D-As 131.4 / 131.4 mm)						
	50	5.1798E+00		7.453E-01	0.000	0.000	32837	129.49
	100	2.352E+00		6.708E+00	0.000	0.000	13682	
17	=	B/H = 394.2 / 131.4 cm						
(CENT)	=	(D-As 131.4 / 131.4 mm)						
	50	5.1798E+00		7.453E-01	0.000	0.000	32837	129.49
	100	2.352E+00		6.708E+00	0.000	0.000	13682	
18	=	B/H = 394.2 / 131.4 cm						
(CENT)	=	(D-As 131.4 / 131.4 mm)						
	50	5.1798E+00		7.453E-01	0.000	0.000	32837	129.49
	100	2.352E+00		6.708E+00	0.000	0.000	13682	
19	=	B/H = 394.2 / 131.4 cm						
(CENT)	=	(D-As 131.4 / 131.4 mm)						
	50	5.1798E+00		7.453E-01	0.000	0.000	32837	129.49
	100	2.352E+00		6.708E+00	0.000	0.000	13682	
21	=	B/H = 500 / 150 cm						
(BEAM)	=	(D-As 150 / 150 mm)						
	50	7.5000E+00		1.406E+00	0.000	0.000	32837	187.50
	100	4.539E+00		1.562E+01	-0.750	-0.750	13682	
22	=	B/H = 500 / 150 cm						
(BEAM)	=	(D-As 150 / 150 mm)						
	50	7.5000E+00		1.406E+00	0.000	0.000	32837	187.50
	100	4.539E+00		1.562E+01	-0.750	-0.750	13682	
23	=	B/H = 500 / 150 cm						
(BEAM)	=	(D-As 150 / 150 mm)						
	50	7.5000E+00		1.406E+00	0.000	0.000	32837	187.50
	100	4.539E+00		1.562E+01	-0.750	-0.750	13682	
24	=	B/H = 500 / 150 cm						
(BEAM)	=	(D-As 150 / 150 mm)						
	50	7.5000E+00		1.406E+00	0.000	0.000	32837	187.50
	100	4.539E+00		1.562E+01	-0.750	-0.750	13682	
25	=	B/H = 500 / 150 cm						
(BEAM)	=	(D-As 150 / 150 mm)						
	50	7.5000E+00		1.406E+00	0.000	0.000	32837	187.50
	100	4.539E+00		1.562E+01	-0.750	-0.750	13682	
26	=	B/H = 500 / 150 cm						
(BEAM)	=	(D-As 150 / 150 mm)						
	50	7.5000E+00		1.406E+00	0.000	0.000	32837	187.50
	100	4.539E+00		1.562E+01	-0.750	-0.750	13682	

SOFiSTiK AG - www.sofistik.de

Composite bridge 38+50+38, b=14.25m, 2x2HL1100R HISTAR460 , slab 0.30m C30/37

Cross-sections static properties

No.	Mat NoR	A[m2] It[m4]	Ay/Az/Ayz [m2]	Iy/Iz/Iyz [m4]	ys/zs [m]	y/z-sc [m]	modules [MPa]	gam [kN/m]
27	=	B/H = 500 / 150 cm						
(BEAM)	=	(D-As 150 / 150 mm)						
	50	7.5000E+00		1.406E+00	0.000	0.000	32837	187.50
	100	4.539E+00		1.562E+01	-0.750	-0.750	13682	
28	=	B/H = 500 / 150 cm						
(BEAM)	=	(D-As 150 / 150 mm)						
	50	7.5000E+00		1.406E+00	0.000	0.000	32837	187.50
	100	4.539E+00		1.562E+01	-0.750	-0.750	13682	
29	=	B/H = 500 / 150 cm						
(BEAM)	=	(D-As 150 / 150 mm)						
	50	7.5000E+00		1.406E+00	0.000	0.000	32837	187.50
	100	4.539E+00		1.562E+01	-0.750	-0.750	13682	
30	=	B/H = 400 / 160 cm						
(CENT)	=	(D-As 160 / 160 mm)						
	50	6.4000E+00		1.365E+00	0.000	0.000	32837	160.00
	100	4.030E+00		8.533E+00	0.000	0.000	13682	
31	=	B/H = 10 / 10 cm						
(BEAM)	=	(D-As 10 / 10 mm)						
	50	1.0000E-02		8.333E-06	0.000	0.000	32837	0.25
	100	1.400E-05		8.333E-06	0.050	0.050	13682	
32	=	B/H = 10 / 10 cm						
(BEAM)	=	(D-As 10 / 10 mm)						
	50	1.0000E-02		8.333E-06	0.000	0.000	32837	0.25
	100	1.400E-05		8.333E-06	0.050	0.050	13682	
33	=	B/H = 10 / 10 cm						
(BEAM)	=	(D-As 10 / 10 mm)						
	50	1.0000E-02		8.333E-06	0.000	0.000	32837	0.25
	100	1.400E-05		8.333E-06	0.050	0.050	13682	
34	=	B/H = 10 / 10 cm						
(BEAM)	=	(D-As 10 / 10 mm)						
	50	1.0000E-02		8.333E-06	0.000	0.000	32837	0.25
	100	1.400E-05		8.333E-06	0.050	0.050	13682	
35	=	B/H = 10 / 10 cm						
(BEAM)	=	(D-As 10 / 10 mm)						
	50	1.0000E-02		8.333E-06	0.000	0.000	32837	0.25
	100	1.400E-05		8.333E-06	0.050	0.050	13682	
36	=	B/H = 10 / 10 cm						
(BEAM)	=	(D-As 10 / 10 mm)						
	50	1.0000E-02		8.333E-06	0.000	0.000	32837	0.25
	100	1.400E-05		8.333E-06	0.050	0.050	13682	
37	=	B/H = 10 / 10 cm						
(BEAM)	=	(D-As 10 / 10 mm)						
	50	1.0000E-02		8.333E-06	0.000	0.000	32837	0.25
	100	1.400E-05		8.333E-06	0.050	0.050	13682	
38	=	B/H = 10 / 10 cm						
(BEAM)	=	(D-As 10 / 10 mm)						
	50	1.0000E-02		8.333E-06	0.000	0.000	32837	0.25
	100	1.400E-05		8.333E-06	0.050	0.050	13682	
39	=	B/H = 10 / 10 cm						
(BEAM)	=	(D-As 10 / 10 mm)						
	50	1.0000E-02		8.333E-06	0.000	0.000	32837	0.25
	100	1.400E-05		8.333E-06	0.050	0.050	13682	
41	=	HL 1100 R						
	1	6.3521E-02		1.294E-02	0.000	0.000	210000	4.99
		2.677E-05		4.998E-04	0.559	0.559	80769	
42	=	HL 1100 R						
	1	6.3521E-02		1.294E-02	0.000	0.000	210000	4.99
		2.677E-05		4.998E-04	0.559	0.559	80769	
43	=	HL 1100 R						
	1	6.3521E-02		1.294E-02	0.000	0.000	210000	4.99
		2.677E-05		4.998E-04	0.559	0.559	80769	
44	=	HL 1100 R						
	1	6.3521E-02		1.294E-02	0.000	0.000	210000	4.99
		2.677E-05		4.998E-04	0.559	0.559	80769	

SOFiSTiK AG - www.sofistik.de

Composite bridge 38+50+38, b=14.25m, 2x2HL1100R HISTAR460 , slab 0.30m C30/37

Cross-sections static properties

```
 No.    Mat      A[m2] Ay/Az/Ayz Iy/Iz/Iyz   ys/zs  y/z-sc   modules     gam
        NoR     It[m4]      [m2]      [m4]     [m]     [m]     [MPa]  [kN/m]
  45      =   HL 1100 R
          1 6.3521E-02           1.294E-02   0.000   0.000    210000    4.99
             2.677E-05           4.998E-04   0.559   0.559     80769
  46      =   HL 1100 R
          1 6.3521E-02           1.294E-02   0.000   0.000    210000    4.99
             2.677E-05           4.998E-04   0.559   0.559     80769
  47      =   HL 1100 R
          1 6.3521E-02           1.294E-02   0.000   0.000    210000    4.99
             2.677E-05           4.998E-04   0.559   0.559     80769
  48      =   HL 1100 R
          1 6.3521E-02           1.294E-02   0.000   0.000    210000    4.99
             2.677E-05           4.998E-04   0.559   0.559     80769
  49      =   HL 1100 R
          1 6.3521E-02           1.294E-02   0.000   0.000    210000    4.99
             2.677E-05           4.998E-04   0.559   0.559     80769
  61      =   B/H = 117.4 / 150 cm
(BEAM)    =   (D-As 150 / 150 mm)
         22 1.7610E+00           3.302E-01   0.000   0.000     32837    0.00
        100  4.218E-01           2.023E-01   0.750   0.750     13682
  62      =   B/H = 117.4 / 150 cm
(BEAM)    =   (D-As 150 / 150 mm)
         22 1.7610E+00           3.302E-01   0.000   0.000     32837    0.00
        100  4.218E-01           2.023E-01   0.750   0.750     13682
  63      =   B/H = 117.4 / 150 cm
(BEAM)    =   (D-As 150 / 150 mm)
         22 1.7610E+00           3.302E-01   0.000   0.000     32837    0.00
        100  4.218E-01           2.023E-01   0.750   0.750     13682
  64      =   B/H = 117.4 / 150 cm
(BEAM)    =   (D-As 150 / 150 mm)
         22 1.7610E+00           3.302E-01   0.000   0.000     32837    0.00
        100  4.218E-01           2.023E-01   0.750   0.750     13682
  65      =   B/H = 117.4 / 150 cm
(BEAM)    =   (D-As 150 / 150 mm)
         22 1.7610E+00           3.302E-01   0.000   0.000     32837    0.00
        100  4.218E-01           2.023E-01   0.750   0.750     13682
  66      =   B/H = 117.4 / 150 cm
(BEAM)    =   (D-As 150 / 150 mm)
         22 1.7610E+00           3.302E-01   0.000   0.000     32837    0.00
        100  4.218E-01           2.023E-01   0.750   0.750     13682
  67      =   B/H = 117.4 / 150 cm
(BEAM)    =   (D-As 150 / 150 mm)
         22 1.7610E+00           3.302E-01   0.000   0.000     32837    0.00
        100  4.218E-01           2.023E-01   0.750   0.750     13682
  68      =   B/H = 117.4 / 150 cm
(BEAM)    =   (D-As 150 / 150 mm)
         22 1.7610E+00           3.302E-01   0.000   0.000     32837    0.00
        100  4.218E-01           2.023E-01   0.750   0.750     13682
  69      =   B/H = 117.4 / 150 cm
(BEAM)    =   (D-As 150 / 150 mm)
         22 1.7610E+00           3.302E-01   0.000   0.000     32837    0.00
        100  4.218E-01           2.023E-01   0.750   0.750     13682
 151      =   VFT
          =   Composit with materials:   1  30  31 300
          1 1.6422E-01 1.075E-01 1.947E-02   0.000   0.000    210000   63.26
             6.270E-05 4.627E-02 8.980E-03   0.218   0.113     80769
 151.1    =   CS    1 steel alone
          1 1.0696E-01 6.075E-02 9.037E-03   0.000   0.000    210000    8.40
             6.270E-05 2.882E-02 3.986E-03   0.400   0.400     80769
 151.2    =   CS   10 prefab. slab C1
          1 1.0696E-01 6.075E-02 9.037E-03   0.000   0.000    210000    8.40
             6.270E-05 2.882E-02 3.986E-03   0.400   0.400     80769
 151.3    =   CS   20 in-situ conc:C2
          1 1.0696E-01 6.075E-02 9.037E-03   0.000   0.000    210000    8.40
             6.270E-05 2.882E-02 3.986E-03   0.400   0.400     80769
```

SOFiSTiK AG - www.sofistik.de

Composite bridge 38+50+38, b=14.25m, 2x2HL1100R HISTAR460 , slab 0.30m C30/37

Cross-sections static properties

```
 No.    Mat      A[m2] Ay/Az/Ayz Iy/Iz/Iyz   ys/zs  y/z-sc   modules     gam
        NoR     It[m4]      [m2]      [m4]     [m]     [m]     [MPa]  [kN/m]
 151.4    =   CS   21 reinf active:C2
          1 1.0696E-01 6.075E-02 9.037E-03   0.000   0.000    210000    8.40
             6.270E-05 2.882E-02 3.986E-03   0.400   0.400     80769
 152      =   VFT
          =   Composit with materials:   1  30  31 300
          1 1.6422E-01 1.075E-01 1.947E-02   0.000   0.000    210000   63.26
             6.270E-05 4.627E-02 8.980E-03   0.218   0.113     80769
 152.1    =   CS    1 steel alone
          1 1.0696E-01 6.075E-02 9.037E-03   0.000   0.000    210000    8.40
             6.270E-05 2.882E-02 3.986E-03   0.400   0.400     80769
 152.2    =   CS   10 prefab. slab C1
          1 1.0696E-01 6.075E-02 9.037E-03   0.000   0.000    210000    8.40
             6.270E-05 2.882E-02 3.986E-03   0.400   0.400     80769
 152.3    =   CS   20 in-situ conc:C2
          1 1.0696E-01 6.075E-02 9.037E-03   0.000   0.000    210000    8.40
             6.270E-05 2.882E-02 3.986E-03   0.400   0.400     80769
 152.4    =   CS   21 reinf active:C2
          1 1.0696E-01 6.075E-02 9.037E-03   0.000   0.000    210000    8.40
             6.270E-05 2.882E-02 3.986E-03   0.400   0.400     80769
 153      =   VFT
          =   Composit with materials:   1  25 210  31 300
          1 1.1360E-01 6.454E-02 1.086E-02   0.000   0.000    210000   63.55
             6.270E-05 3.273E-02 4.484E-03   0.373   0.339     80769
 153.1    =   CS    1 steel alone
          1 1.0696E-01 6.075E-02 9.037E-03   0.000   0.000    210000    8.40
             6.270E-05 2.882E-02 3.986E-03   0.400   0.400     80769
 153.2    =   CS   10 prefab. slab C1
          1 1.0696E-01 6.075E-02 9.037E-03   0.000   0.000    210000    8.40
             6.270E-05 2.882E-02 3.986E-03   0.400   0.400     80769
 153.3    =   CS   20 in-situ conc:C2
          1 1.0696E-01 6.075E-02 9.037E-03   0.000   0.000    210000    8.40
             6.270E-05 2.882E-02 3.986E-03   0.400   0.400     80769
 153.4    =   CS   21 reinf active:C2
          1 1.0762E-01 6.075E-02 9.103E-03   0.000   0.000    210000    8.69
             6.270E-05 2.887E-02 3.986E-03   0.402   0.400     80769
 154      =   VFT (151)
          =   Composit with materials:   1  30  31 300
          1 4.8158E-01 3.119E-01 8.036E-02   0.000   0.000    210000   64.97
             6.270E-05 4.717E-02 1.456E+00   0.056  -0.148     80769
 154.1    =   CS    1 steel alone
          1 1.2870E-01 6.075E-02 2.634E-02   0.000   0.000    210000   10.10
             6.270E-05 5.070E-02 3.986E-03   0.609   0.609     80769
 154.2    =   CS   10 prefab. slab C1
          1 1.2870E-01 6.075E-02 2.634E-02   0.000   0.000    210000   10.10
             6.270E-05 5.070E-02 3.986E-03   0.609   0.609     80769
 154.3    =   CS   20 in-situ conc:C2
          1 1.2870E-01 6.075E-02 2.634E-02   0.000   0.000    210000   10.10
             6.270E-05 5.070E-02 3.986E-03   0.609   0.609     80769
 154.4    =   CS   21 reinf active:C2
          1 1.2870E-01 6.075E-02 2.634E-02   0.000   0.000    210000   10.10
             6.270E-05 5.070E-02 3.986E-03   0.609   0.609     80769
 155      =   VFT (151)
          =   Composit with materials:   1  30  31 300
          1 4.9707E-01 3.119E-01 1.293E-01   0.000   0.000    210000   66.18
             6.270E-05 6.153E-02 1.456E+00   0.116  -0.147     80769
 155.1    =   CS    1 steel alone
          1 1.4418E-01 6.075E-02 4.541E-02   0.000   0.000    210000   11.32
             6.270E-05 6.620E-02 3.986E-03   0.758   0.758     80769
 155.2    =   CS   10 prefab. slab C1
          1 1.4418E-01 6.075E-02 4.541E-02   0.000   0.000    210000   11.32
             6.270E-05 6.620E-02 3.986E-03   0.758   0.758     80769
 155.3    =   CS   20 in-situ conc:C2
          1 1.4418E-01 6.075E-02 4.541E-02   0.000   0.000    210000   11.32
             6.270E-05 6.620E-02 3.986E-03   0.758   0.758     80769
```

SOFiSTiK AG - www.sofistik.de

Composite bridge 38+50+38, b=14.25m, 2x2HL1100R HISTAR460 , slab 0.30m C30/37

Cross-sections static properties

```
 No.    Mat      A[m2] Ay/Az/Ayz Iy/Iz/Iyz   ys/zs  y/z-sc   modules     gam
        NoR     It[m4]      [m2]      [m4]     [m]     [m]     [MPa]  [kN/m]
 155.4    =   CS   21 reinf active:C2
          1 1.4418E-01 6.075E-02 4.541E-02   0.000   0.000    210000   11.32
             6.270E-05 6.620E-02 3.986E-03   0.758   0.758     80769
 156      =   VFT (151)
          =   Composit with materials:   1  30  31 300
          1 5.1020E-01 3.098E-01 1.927E-01   0.000   0.000    210000   67.40
             6.270E-05 7.613E-02 1.426E+00   0.184  -0.147     80769
 156.1    =   CS    1 steel alone
          1 1.5967E-01 6.075E-02 7.088E-02   0.000   0.000    210000   12.53
             6.270E-05 8.155E-02 3.986E-03   0.907   0.907     80769
 156.2    =   CS   10 prefab. slab C1
          1 1.5967E-01 6.075E-02 7.088E-02   0.000   0.000    210000   12.53
             6.270E-05 8.155E-02 3.986E-03   0.907   0.907     80769
 156.3    =   CS   20 in-situ conc:C2
          1 1.5967E-01 6.075E-02 7.088E-02   0.000   0.000    210000   12.53
             6.270E-05 8.155E-02 3.986E-03   0.907   0.907     80769
 156.4    =   CS   21 reinf active:C2
          1 1.5967E-01 6.075E-02 7.088E-02   0.000   0.000    210000   12.53
             6.270E-05 8.155E-02 3.986E-03   0.907   0.907     80769
 157      =   VFT (151)
          =   Composit with materials:   1  30  31 300
          1 4.8158E-01 3.119E-01 8.036E-02   0.000   0.000    210000   64.97
             6.270E-05 4.717E-02 1.456E+00   0.056  -0.148     80769
 157.1    =   CS    1 steel alone
          1 1.2870E-01 6.075E-02 2.634E-02   0.000   0.000    210000   10.10
             6.270E-05 5.070E-02 3.986E-03   0.609   0.609     80769
 157.2    =   CS   10 prefab. slab C1
          1 1.2870E-01 6.075E-02 2.634E-02   0.000   0.000    210000   10.10
             6.270E-05 5.070E-02 3.986E-03   0.609   0.609     80769
 157.3    =   CS   20 in-situ conc:C2
          1 1.2870E-01 6.075E-02 2.634E-02   0.000   0.000    210000   10.10
             6.270E-05 5.070E-02 3.986E-03   0.609   0.609     80769
 157.4    =   CS   21 reinf active:C2
          1 1.2870E-01 6.075E-02 2.634E-02   0.000   0.000    210000   10.10
             6.270E-05 5.070E-02 3.986E-03   0.609   0.609     80769
 158      =   VFT (151)
          =   Composit with materials:   1  30  31 300
          1 4.9920E-01 3.119E-01 1.371E-01   0.000   0.000    210000   66.35
             6.270E-05 6.351E-02 1.456E+00   0.125  -0.147     80769
 158.1    =   CS    1 steel alone
          1 1.4631E-01 6.075E-02 4.852E-02   0.000   0.000    210000   11.49
             6.270E-05 6.832E-02 3.986E-03   0.778   0.778     80769
 158.2    =   CS   10 prefab. slab C1
          1 1.4631E-01 6.075E-02 4.852E-02   0.000   0.000    210000   11.49
             6.270E-05 6.832E-02 3.986E-03   0.778   0.778     80769
 158.3    =   CS   20 in-situ conc:C2
          1 1.4631E-01 6.075E-02 4.852E-02   0.000   0.000    210000   11.49
             6.270E-05 6.832E-02 3.986E-03   0.778   0.778     80769
 158.4    =   CS   21 reinf active:C2
          1 1.4631E-01 6.075E-02 4.852E-02   0.000   0.000    210000   11.49
             6.270E-05 6.832E-02 3.986E-03   0.778   0.778     80769
 159      =   VFT (151)
          =   Composit with materials:   1  30  31 300
          1 5.1020E-01 3.098E-01 1.927E-01   0.000   0.000    210000   67.40
             6.270E-05 7.613E-02 1.426E+00   0.184  -0.147     80769
 159.1    =   CS    1 steel alone
          1 1.5967E-01 6.075E-02 7.088E-02   0.000   0.000    210000   12.53
             6.270E-05 8.155E-02 3.986E-03   0.907   0.907     80769
 159.2    =   CS   10 prefab. slab C1
          1 1.5967E-01 6.075E-02 7.088E-02   0.000   0.000    210000   12.53
             6.270E-05 8.155E-02 3.986E-03   0.907   0.907     80769
 159.3    =   CS   20 in-situ conc:C2
          1 1.5967E-01 6.075E-02 7.088E-02   0.000   0.000    210000   12.53
             6.270E-05 8.155E-02 3.986E-03   0.907   0.907     80769
```

SOFiSTiK AG - www.sofistik.de

Composite bridge 38+50+38, b=14.25m, 2x2HL1100R HISTAR460 , slab 0.30m C30/37

Cross-sections static properties

```
 No.    Mat      A[m2] Ay/Az/Ayz Iy/Iz/Iyz   ys/zs  y/z-sc   modules     gam
        NoR     It[m4]      [m2]      [m4]     [m]     [m]     [MPa]  [kN/m]
 159.4    =   CS   21 reinf active:C2
          1 1.5967E-01 6.075E-02 7.088E-02   0.000   0.000    210000   12.53
             6.270E-05 8.155E-02 3.986E-03   0.907   0.907     80769
 160      =   VFT (153)
          =   Composit with materials:   1  25 210  31 300
          1 1.6617E-01 3.280E-02 4.335E-02   0.000   0.000    210000   65.26
             6.270E-05 2.694E-02 1.202E-01   0.443  -0.125     80769
 160.1    =   CS    1 steel alone
          1 1.2870E-01 6.075E-02 2.634E-02   0.000   0.000    210000   10.10
             6.270E-05 5.070E-02 3.986E-03   0.609   0.609     80769
 160.2    =   CS   10 prefab. slab C1
          1 1.2870E-01 6.075E-02 2.634E-02   0.000   0.000    210000   10.10
             6.270E-05 5.070E-02 3.986E-03   0.609   0.609     80769
 160.3    =   CS   20 in-situ conc:C2
          1 1.2870E-01 6.075E-02 2.634E-02   0.000   0.000    210000   10.10
             6.270E-05 5.070E-02 3.986E-03   0.609   0.609     80769
 160.4    =   CS   21 reinf active:C2
          1 1.2935E-01 6.075E-02 2.652E-02   0.000   0.000    210000   10.40
             6.270E-05 5.075E-02 3.986E-03   0.612   0.609     80769
 161      =   VFT (153)
          =   Composit with materials:   1  25 210  31 300
          1 1.6617E-01 3.280E-02 4.335E-02   0.000   0.000    210000   65.26
             6.270E-05 2.694E-02 1.202E-01   0.443  -0.125     80769
 161.1    =   CS    1 steel alone
          1 1.2870E-01 6.075E-02 2.634E-02   0.000   0.000    210000   10.10
             6.270E-05 5.070E-02 3.986E-03   0.609   0.609     80769
 161.2    =   CS   10 prefab. slab C1
          1 1.2870E-01 6.075E-02 2.634E-02   0.000   0.000    210000   10.10
             6.270E-05 5.070E-02 3.986E-03   0.609   0.609     80769
 161.3    =   CS   20 in-situ conc:C2
          1 1.2870E-01 6.075E-02 2.634E-02   0.000   0.000    210000   10.10
             6.270E-05 5.070E-02 3.986E-03   0.609   0.609     80769
 161.4    =   CS   21 reinf active:C2
          1 1.2935E-01 6.075E-02 2.652E-02   0.000   0.000    210000   10.40
             6.270E-05 5.075E-02 3.986E-03   0.612   0.609     80769
 162      =   VFT (153)
          =   Composit with materials:   1  25 210  31 300
          1 2.8372E-01 3.610E-02 2.931E-01   0.000   0.000    210000   91.18
             6.270E-05 8.592E-02 1.681E-01   1.218  -0.116     80769
 162.1    =   CS    1 steel alone
          1 2.0056E-01 6.075E-02 1.740E-01   0.000   0.000    210000   15.74
             6.270E-05 1.213E-01 3.986E-03   1.300   1.300     80769
 162.2    =   CS   10 prefab. slab C1
          1 2.0056E-01 6.075E-02 1.740E-01   0.000   0.000    210000   15.74
             6.270E-05 1.213E-01 3.986E-03   1.300   1.300     80769
 162.3    =   CS   20 in-situ conc:C2
          1 2.0056E-01 6.075E-02 1.740E-01   0.000   0.000    210000   15.74
             6.270E-05 1.213E-01 3.986E-03   1.300   1.300     80769
 162.4    =   CS   21 reinf active:C2
          1 2.4242E-01 6.075E-02 2.023E-01   0.000   0.000    210000   36.32
             6.270E-05 1.118E-01 3.986E-03   1.452   1.300     80769
 163      =   VFT (153)
          =   Composit with materials:   1  25 210  31 300
          1 2.8372E-01 3.610E-02 2.931E-01   0.000   0.000    210000   91.18
             6.270E-05 8.592E-02 1.681E-01   1.218  -0.116     80769
 163.1    =   CS    1 steel alone
          1 2.0056E-01 6.075E-02 1.740E-01   0.000   0.000    210000   15.74
             6.270E-05 1.213E-01 3.986E-03   1.300   1.300     80769
 163.2    =   CS   10 prefab. slab C1
          1 2.0056E-01 6.075E-02 1.740E-01   0.000   0.000    210000   15.74
             6.270E-05 1.213E-01 3.986E-03   1.300   1.300     80769
 163.3    =   CS   20 in-situ conc:C2
          1 2.0056E-01 6.075E-02 1.740E-01   0.000   0.000    210000   15.74
             6.270E-05 1.213E-01 3.986E-03   1.300   1.300     80769
```

SOFiSTiK AG - www.sofistik.de

Composite bridge 38+50+38, b=14.25m, 2x2HL1100R HISTAR460 , slab 0.30m C30/37

Cross-sections static properties

```
 No.    Mat      A[m2] Ay/Az/Ayz Iy/Iz/Iyz   ys/zs  y/z-sc   modules     gam
        NoR     It[m4]      [m2]      [m4]     [m]     [m]     [MPa]  [kN/m]
 163.4    =   CS   21 reinf active:C2
          1 2.4242E-01 6.075E-02 2.023E-01   0.000   0.000    210000   36.32
             6.270E-05 1.118E-01 3.986E-03   1.452   1.300     80769
 164      =   VFT (153)
          =   Composit with materials:   1  25 210  31 300
          1 2.0515E-01 3.682E-02 1.118E-01   0.000   0.000    210000   68.95
             6.270E-05 4.838E-02 1.798E-01   0.702  -0.127     80769
 164.1    =   CS    1 steel alone
          1 1.5967E-01 6.075E-02 7.088E-02   0.000   0.000    210000   12.53
             6.270E-05 8.155E-02 3.986E-03   0.907   0.907     80769
 164.2    =   CS   10 prefab. slab C1
          1 1.5967E-01 6.075E-02 7.088E-02   0.000   0.000    210000   12.53
             6.270E-05 8.155E-02 3.986E-03   0.907   0.907     80769
 164.3    =   CS   20 in-situ conc:C2
          1 1.5967E-01 6.075E-02 7.088E-02   0.000   0.000    210000   12.53
             6.270E-05 8.155E-02 3.986E-03   0.907   0.907     80769
 164.4    =   CS   21 reinf active:C2
          1 1.6289E-01 6.075E-02 7.294E-02   0.000   0.000    210000   14.09
             6.270E-05 8.167E-02 3.986E-03   0.923   0.907     80769
 165      =   VFT (153)
          =   Composit with materials:   1  25 210  31 300
          1 2.1273E-01 3.669E-02 1.323E-01   0.000   0.000    210000   69.80
             6.270E-05 5.513E-02 1.777E-01   0.769  -0.125     80769
 165.1    =   CS    1 steel alone
          1 1.6683E-01 6.075E-02 8.500E-02   0.000   0.000    210000   13.10
             6.270E-05 8.859E-02 3.986E-03   0.976   0.976     80769
 165.2    =   CS   10 prefab. slab C1
          1 1.6683E-01 6.075E-02 8.500E-02   0.000   0.000    210000   13.10
             6.270E-05 8.859E-02 3.986E-03   0.976   0.976     80769
 165.3    =   CS   20 in-situ conc:C2
          1 1.6683E-01 6.075E-02 8.500E-02   0.000   0.000    210000   13.10
             6.270E-05 8.859E-02 3.986E-03   0.976   0.976     80769
 165.4    =   CS   21 reinf active:C2
          1 1.7063E-01 6.075E-02 8.783E-02   0.000   0.000    210000   14.94
             6.270E-05 8.870E-02 3.986E-03   0.995   0.976     80769
 166      =   VFT (153)
          =   Composit with materials:   1  25 210  31 300
          1 2.2913E-01 3.655E-02 1.663E-01   0.000   0.000    210000   74.65
             6.270E-05 6.343E-02 1.754E-01   0.880  -0.123     80769
 166.1    =   CS    1 steel alone
          1 1.7485E-01 6.075E-02 1.027E-01   0.000   0.000    210000   13.73
             6.270E-05 9.643E-02 3.986E-03   1.053   1.053     80769
 166.2    =   CS   10 prefab. slab C1
          1 1.7485E-01 6.075E-02 1.027E-01   0.000   0.000    210000   13.73
             6.270E-05 9.643E-02 3.986E-03   1.053   1.053     80769
 166.3    =   CS   20 in-situ conc:C2
          1 1.7485E-01 6.075E-02 1.027E-01   0.000   0.000    210000   13.73
             6.270E-05 9.643E-02 3.986E-03   1.053   1.053     80769
 166.4    =   CS   21 reinf active:C2
          1 1.8722E-01 6.075E-02 1.116E-01   0.000   0.000    210000   19.79
             6.270E-05 9.543E-02 3.986E-03   1.111   1.053     80769
 167      =   VFT (153)
          =   Composit with materials:   1  25 210  31 300
          1 2.2913E-01 3.655E-02 1.663E-01   0.000   0.000    210000   74.65
             6.270E-05 6.343E-02 1.754E-01   0.880  -0.123     80769
 167.1    =   CS    1 steel alone
          1 1.7485E-01 6.075E-02 1.027E-01   0.000   0.000    210000   13.73
             6.270E-05 9.643E-02 3.986E-03   1.053   1.053     80769
 167.2    =   CS   10 prefab. slab C1
          1 1.7485E-01 6.075E-02 1.027E-01   0.000   0.000    210000   13.73
             6.270E-05 9.643E-02 3.986E-03   1.053   1.053     80769
 167.3    =   CS   20 in-situ conc:C2
          1 1.7485E-01 6.075E-02 1.027E-01   0.000   0.000    210000   13.73
             6.270E-05 9.643E-02 3.986E-03   1.053   1.053     80769
```

SOFiSTiK AG - www.sofistik.de

Composite bridge 38+50+38, b=14.25m, 2x2HL1100R HISTAR460 , slab 0.30m C30/37

Cross-sections static properties

```
 No.    Mat      A[m2] Ay/Az/Ayz Iy/Iz/Iyz   ys/zs  y/z-sc   modules     gam
        NoR     It[m4]      [m2]      [m4]     [m]     [m]     [MPa]  [kN/m]
 167.4    =   CS   21 reinf active:C2
          1 1.8722E-01 6.075E-02 1.116E-01   0.000   0.000    210000   19.79
             6.270E-05 9.543E-02 3.986E-03   1.111   1.053     80769
 168      =   VFT (153)
          =   Composit with materials:   1  25 210  31 300
          1 2.3938E-01 3.647E-02 1.882E-01   0.000   0.000    210000   77.75
             6.270E-05 6.803E-02 1.740E-01   0.947  -0.121     80769
 168.1    =   CS    1 steel alone
          1 1.7967E-01 6.075E-02 1.144E-01   0.000   0.000    210000   14.10
             6.270E-05 1.011E-01 3.986E-03   1.099   1.099     80769
 168.2    =   CS   10 prefab. slab C1
          1 1.7967E-01 6.075E-02 1.144E-01   0.000   0.000    210000   14.10
             6.270E-05 1.011E-01 3.986E-03   1.099   1.099     80769
 168.3    =   CS   20 in-situ conc:C2
          1 1.7967E-01 6.075E-02 1.144E-01   0.000   0.000    210000   14.10
             6.270E-05 1.011E-01 3.986E-03   1.099   1.099     80769
 168.4    =   CS   21 reinf active:C2
          1 1.9759E-01 6.075E-02 1.270E-01   0.000   0.000    210000   22.89
             6.270E-05 9.881E-02 3.986E-03   1.179   1.099     80769
 169      =   VFT (153)
          =   Composit with materials:   1  25 210  31 300
          1 2.4963E-01 3.638E-02 2.109E-01   0.000   0.000    210000   80.86
             6.270E-05 7.239E-02 1.726E-01   1.012  -0.120     80769
 169.1    =   CS    1 steel alone
          1 1.8450E-01 6.075E-02 1.268E-01   0.000   0.000    210000   14.48
             6.270E-05 1.058E-01 3.986E-03   1.146   1.146     80769
 169.2    =   CS   10 prefab. slab C1
          1 1.8450E-01 6.075E-02 1.268E-01   0.000   0.000    210000   14.48
             6.270E-05 1.058E-01 3.986E-03   1.146   1.146     80769
 169.3    =   CS   20 in-situ conc:C2
          1 1.8450E-01 6.075E-02 1.268E-01   0.000   0.000    210000   14.48
             6.270E-05 1.058E-01 3.986E-03   1.146   1.146     80769
 169.4    =   CS   21 reinf active:C2
          1 2.0795E-01 6.075E-02 1.431E-01   0.000   0.000    210000   25.99
             6.270E-05 1.019E-01 3.986E-03   1.245   1.146     80769
 170      =   VFT (153)
          =   Composit with materials:   1  25 210  31 300
          1 2.5707E-01 3.632E-02 2.279E-01   0.000   0.000    210000   83.11
             6.270E-05 7.545E-02 1.716E-01   1.058  -0.119     80769
 170.1    =   CS    1 steel alone
          1 1.8801E-01 6.075E-02 1.363E-01   0.000   0.000    210000   14.76
             6.270E-05 1.092E-01 3.986E-03   1.179   1.179     80769
 170.2    =   CS   10 prefab. slab C1
          1 1.8801E-01 6.075E-02 1.363E-01   0.000   0.000    210000   14.76
             6.270E-05 1.092E-01 3.986E-03   1.179   1.179     80769
 170.3    =   CS   20 in-situ conc:C2
          1 1.8801E-01 6.075E-02 1.363E-01   0.000   0.000    210000   14.76
             6.270E-05 1.092E-01 3.986E-03   1.179   1.179     80769
 170.4    =   CS   21 reinf active:C2
          1 2.1548E-01 6.075E-02 1.552E-01   0.000   0.000    210000   28.25
             6.270E-05 1.041E-01 3.986E-03   1.291   1.179     80769
 171      =   VFT (153)
          =   Composit with materials:   1  25 210  31 300
          1 2.6452E-01 3.626E-02 2.454E-01   0.000   0.000    210000   85.37
             6.270E-05 7.843E-02 1.706E-01   1.104  -0.118     80769
 171.1    =   CS    1 steel alone
          1 1.9152E-01 6.075E-02 1.463E-01   0.000   0.000    210000   15.03
             6.270E-05 1.126E-01 3.986E-03   1.213   1.213     80769
 171.2    =   CS   10 prefab. slab C1
          1 1.9152E-01 6.075E-02 1.463E-01   0.000   0.000    210000   15.03
             6.270E-05 1.126E-01 3.986E-03   1.213   1.213     80769
 171.3    =   CS   20 in-situ conc:C2
          1 1.9152E-01 6.075E-02 1.463E-01   0.000   0.000    210000   15.03
             6.270E-05 1.126E-01 3.986E-03   1.213   1.213     80769
```

SOFiSTiK AG - www.sofistik.de

Composite bridge 38+50+38, b=14.25m, 2x2HL1100R HISTAR460 , slab 0.30m C30/37

Cross-sections static properties

```
 No.    Mat      A[m2] Ay/Az/Ayz Iy/Iz/Iyz   ys/zs  y/z-sc   modules     gam
        NoR     It[m4]      [m2]      [m4]     [m]     [m]     [MPa]  [kN/m]
 171.4    =   CS   21 reinf active:C2
          1 2.2301E-01 6.075E-02 1.678E-01   0.000   0.000    210000   30.50
             6.270E-05 1.063E-01 3.986E-03   1.337   1.213     80769
 172      =   VFT (153)
          =   Composit with materials:   1  25 210  31 300
          1 2.6910E-01 3.622E-02 2.565E-01   0.000   0.000    210000   86.75
             6.270E-05 8.024E-02 1.700E-01   1.131  -0.118     80769
 172.1    =   CS    1 steel alone
          1 1.9367E-01 6.075E-02 1.526E-01   0.000   0.000    210000   15.20
             6.270E-05 1.147E-01 3.986E-03   1.234   1.234     80769
 172.2    =   CS   10 prefab. slab C1
          1 1.9367E-01 6.075E-02 1.526E-01   0.000   0.000    210000   15.20
             6.270E-05 1.147E-01 3.986E-03   1.234   1.234     80769
 172.3    =   CS   20 in-situ conc:C2
          1 1.9367E-01 6.075E-02 1.526E-01   0.000   0.000    210000   15.20
             6.270E-05 1.147E-01 3.986E-03   1.234   1.234     80769
 172.4    =   CS   21 reinf active:C2
          1 2.2764E-01 6.075E-02 1.758E-01   0.000   0.000    210000   31.89
             6.270E-05 1.076E-01 3.986E-03   1.365   1.234     80769
 173      =   VFT (153)
          =   Composit with materials:   1  25 210  31 300
          1 2.7368E-01 3.618E-02 2.677E-01   0.000   0.000    210000   88.14
             6.270E-05 8.203E-02 1.694E-01   1.159  -0.117     80769
 173.1    =   CS    1 steel alone
          1 1.9583E-01 6.075E-02 1.591E-01   0.000   0.000    210000   15.37
             6.270E-05 1.167E-01 3.986E-03   1.255   1.255     80769
 173.2    =   CS   10 prefab. slab C1
          1 1.9583E-01 6.075E-02 1.591E-01   0.000   0.000    210000   15.37
             6.270E-05 1.167E-01 3.986E-03   1.255   1.255     80769
 173.3    =   CS   20 in-situ conc:C2
          1 1.9583E-01 6.075E-02 1.591E-01   0.000   0.000    210000   15.37
             6.270E-05 1.167E-01 3.986E-03   1.255   1.255     80769
 173.4    =   CS   21 reinf active:C2
          1 2.3227E-01 6.075E-02 1.839E-01   0.000   0.000    210000   33.28
             6.270E-05 1.089E-01 3.986E-03   1.392   1.255     80769
 174      =   VFT (153)
          =   Composit with materials:   1  25 210  31 300
          1 2.7670E-01 3.615E-02 2.752E-01   0.000   0.000    210000   89.05
             6.270E-05 8.321E-02 1.690E-01   1.177  -0.117     80769
 174.1    =   CS    1 steel alone
          1 1.9725E-01 6.075E-02 1.635E-01   0.000   0.000    210000   15.48
             6.270E-05 1.181E-01 3.986E-03   1.268   1.268     80769
 174.2    =   CS   10 prefab. slab C1
          1 1.9725E-01 6.075E-02 1.635E-01   0.000   0.000    210000   15.48
             6.270E-05 1.181E-01 3.986E-03   1.268   1.268     80769
 174.3    =   CS   20 in-situ conc:C2
          1 1.9725E-01 6.075E-02 1.635E-01   0.000   0.000    210000   15.48
             6.270E-05 1.181E-01 3.986E-03   1.268   1.268     80769
 174.4    =   CS   21 reinf active:C2
          1 2.3532E-01 6.075E-02 1.893E-01   0.000   0.000    210000   34.19
             6.270E-05 1.098E-01 3.986E-03   1.410   1.268     80769
 175      =   VFT (153)
          =   Composit with materials:   1  25 210  31 300
          1 2.7972E-01 3.613E-02 2.828E-01   0.000   0.000    210000   89.97
             6.270E-05 8.438E-02 1.686E-01   1.195  -0.116     80769
 175.1    =   CS    1 steel alone
          1 1.9867E-01 6.075E-02 1.679E-01   0.000   0.000    210000   15.60
             6.270E-05 1.195E-01 3.986E-03   1.282   1.282     80769
 175.2    =   CS   10 prefab. slab C1
          1 1.9867E-01 6.075E-02 1.679E-01   0.000   0.000    210000   15.60
             6.270E-05 1.195E-01 3.986E-03   1.282   1.282     80769
 175.3    =   CS   20 in-situ conc:C2
          1 1.9867E-01 6.075E-02 1.679E-01   0.000   0.000    210000   15.60
             6.270E-05 1.195E-01 3.986E-03   1.282   1.282     80769
```

SOFiSTiK AG - www.sofistik.de

Composite bridge 38+50+38, b=14.25m, 2x2HL1100R HISTAR460 , slab 0.30m C30/37

Cross-sections static properties

```
 No.    Mat      A[m2] Ay/Az/Ayz Iy/Iz/Iyz   ys/zs  y/z-sc   modules     gam
        NoR     It[m4]      [m2]      [m4]     [m]     [m]     [MPa]  [kN/m]
 175.4    =   CS   21 reinf active:C2
          1 2.3837E-01 6.075E-02 1.949E-01   0.000   0.000    210000   35.11
             6.270E-05 1.106E-01 3.986E-03   1.428   1.282     80769
 176      =   VFT (153)
          =   Composit with materials:   1  25 210  31 300
          1 2.8172E-01 3.611E-02 2.879E-01   0.000   0.000    210000   90.57
             6.270E-05 8.515E-02 1.683E-01   1.207  -0.116     80769
 176.1    =   CS    1 steel alone
          1 1.9962E-01 6.075E-02 1.709E-01   0.000   0.000    210000   15.67
             6.270E-05 1.204E-01 3.986E-03   1.291   1.291     80769
 176.2    =   CS   10 prefab. slab C1
          1 1.9962E-01 6.075E-02 1.709E-01   0.000   0.000    210000   15.67
             6.270E-05 1.204E-01 3.986E-03   1.291   1.291     80769
 176.3    =   CS   20 in-situ conc:C2
          1 1.9962E-01 6.075E-02 1.709E-01   0.000   0.000    210000   15.67
             6.270E-05 1.204E-01 3.986E-03   1.291   1.291     80769
 176.4    =   CS   21 reinf active:C2
          1 2.4040E-01 6.075E-02 1.986E-01   0.000   0.000    210000   35.71
             6.270E-05 1.112E-01 3.986E-03   1.440   1.291     80769
 177      =   VFT (153)
          =   Composit with materials:   1  25 210  31 300
          1 2.0515E-01 3.682E-02 1.118E-01   0.000   0.000    210000   68.95
             6.270E-05 4.838E-02 1.798E-01   0.702  -0.127     80769
 177.1    =   CS    1 steel alone
          1 1.5967E-01 6.075E-02 7.088E-02   0.000   0.000    210000   12.53
             6.270E-05 8.155E-02 3.986E-03   0.907   0.907     80769
 177.2    =   CS   10 prefab. slab C1
          1 1.5967E-01 6.075E-02 7.088E-02   0.000   0.000    210000   12.53
             6.270E-05 8.155E-02 3.986E-03   0.907   0.907     80769
 177.3    =   CS   20 in-situ conc:C2
          1 1.5967E-01 6.075E-02 7.088E-02   0.000   0.000    210000   12.53
             6.270E-05 8.155E-02 3.986E-03   0.907   0.907     80769
 177.4    =   CS   21 reinf active:C2
          1 1.6289E-01 6.075E-02 7.294E-02   0.000   0.000    210000   14.09
             6.270E-05 8.167E-02 3.986E-03   0.923   0.907     80769
 178      =   VFT (153)
          =   Composit with materials:   1  25 210  31 300
          1 2.1684E-01 3.666E-02 1.411E-01   0.000   0.000    210000   70.93
             6.270E-05 5.749E-02 1.771E-01   0.798  -0.124     80769
 178.1    =   CS    1 steel alone
          1 1.6906E-01 6.075E-02 8.972E-02   0.000   0.000    210000   13.27
             6.270E-05 9.077E-02 3.986E-03   0.997   0.997     80769
 178.2    =   CS   10 prefab. slab C1
          1 1.6906E-01 6.075E-02 8.972E-02   0.000   0.000    210000   13.27
             6.270E-05 9.077E-02 3.986E-03   0.997   0.997     80769
 178.3    =   CS   20 in-situ conc:C2
          1 1.6906E-01 6.075E-02 8.972E-02   0.000   0.000    210000   13.27
             6.270E-05 9.077E-02 3.986E-03   0.997   0.997     80769
 178.4    =   CS   21 reinf active:C2
          1 1.7480E-01 6.075E-02 9.400E-02   0.000   0.000    210000   16.07
             6.270E-05 9.077E-02 3.986E-03   1.026   0.997     80769
 179      =   VFT (153)
          =   Composit with materials:   1  25 210  31 300
          1 2.3677E-01 3.649E-02 1.825E-01   0.000   0.000    210000   76.96
             6.270E-05 6.689E-02 1.744E-01   0.930  -0.122     80769
 179.1    =   CS    1 steel alone
          1 1.7845E-01 6.075E-02 1.113E-01   0.000   0.000    210000   14.01
             6.270E-05 9.993E-02 3.986E-03   1.087   1.087     80769
 179.2    =   CS   10 prefab. slab C1
          1 1.7845E-01 6.075E-02 1.113E-01   0.000   0.000    210000   14.01
             6.270E-05 9.993E-02 3.986E-03   1.087   1.087     80769
 179.3    =   CS   20 in-situ conc:C2
          1 1.7845E-01 6.075E-02 1.113E-01   0.000   0.000    210000   14.01
             6.270E-05 9.993E-02 3.986E-03   1.087   1.087     80769
```

SOFiSTiK AG - www.sofistik.de

Composite bridge 38+50+38, b=14.25m, 2x2HL1100R HISTAR460 , slab 0.30m C30/37

Cross-sections static properties

```
 No.    Mat      A[m2] Ay/Az/Ayz Iy/Iz/Iyz   ys/zs  y/z-sc   modules     gam
        NoR     It[m4]      [m2]      [m4]     [m]     [m]     [MPa]  [kN/m]
 179.4    =   CS   21 reinf active:C2
          1 1.9495E-01 6.075E-02 1.231E-01   0.000   0.000    210000   22.10
             6.270E-05 9.798E-02 3.986E-03   1.162   1.087     80769
 180      =   VFT (153)
          =   Composit with materials:   1  25 210  31 300
          1 2.5102E-01 3.637E-02 2.140E-01   0.000   0.000    210000   81.28
             6.270E-05 7.297E-02 1.724E-01   1.020  -0.120     80769
 180.1    =   CS    1 steel alone
          1 1.8516E-01 6.075E-02 1.285E-01   0.000   0.000    210000   14.54
             6.270E-05 1.065E-01 3.986E-03   1.152   1.152     80769
 180.2    =   CS   10 prefab. slab C1
          1 1.8516E-01 6.075E-02 1.285E-01   0.000   0.000    210000   14.54
             6.270E-05 1.065E-01 3.986E-03   1.152   1.152     80769
 180.3    =   CS   20 in-situ conc:C2
          1 1.8516E-01 6.075E-02 1.285E-01   0.000   0.000    210000   14.54
             6.270E-05 1.065E-01 3.986E-03   1.152   1.152     80769
 180.4    =   CS   21 reinf active:C2
          1 2.0936E-01 6.075E-02 1.453E-01   0.000   0.000    210000   26.42
             6.270E-05 1.023E-01 3.986E-03   1.253   1.152     80769
 181      =   VFT (153)
          =   Composit with materials:   1  25 210  31 300
          1 2.6528E-01 3.625E-02 2.472E-01   0.000   0.000    210000   85.60
             6.270E-05 7.873E-02 1.705E-01   1.108  -0.118     80769
 181.1    =   CS    1 steel alone
          1 1.9187E-01 6.075E-02 1.473E-01   0.000   0.000    210000   15.06
             6.270E-05 1.129E-01 3.986E-03   1.216   1.216     80769
 181.2    =   CS   10 prefab. slab C1
          1 1.9187E-01 6.075E-02 1.473E-01   0.000   0.000    210000   15.06
             6.270E-05 1.129E-01 3.986E-03   1.216   1.216     80769
 181.3    =   CS   20 in-situ conc:C2
          1 1.9187E-01 6.075E-02 1.473E-01   0.000   0.000    210000   15.06
             6.270E-05 1.129E-01 3.986E-03   1.216   1.216     80769
 181.4    =   CS   21 reinf active:C2
          1 2.2377E-01 6.075E-02 1.691E-01   0.000   0.000    210000   30.73
             6.270E-05 1.065E-01 3.986E-03   1.342   1.216     80769
 182      =   VFT (153)
          =   Composit with materials:   1  25 210  31 300
          1 2.7450E-01 3.617E-02 2.697E-01   0.000   0.000    210000   88.39
             6.270E-05 8.235E-02 1.693E-01   1.164  -0.117     80769
 182.1    =   CS    1 steel alone
          1 1.9622E-01 6.075E-02 1.603E-01   0.000   0.000    210000   15.40
             6.270E-05 1.171E-01 3.986E-03   1.258   1.258     80769
 182.2    =   CS   10 prefab. slab C1
          1 1.9622E-01 6.075E-02 1.603E-01   0.000   0.000    210000   15.40
             6.270E-05 1.171E-01 3.986E-03   1.258   1.258     80769
 182.3    =   CS   20 in-situ conc:C2
          1 1.9622E-01 6.075E-02 1.603E-01   0.000   0.000    210000   15.40
             6.270E-05 1.171E-01 3.986E-03   1.258   1.258     80769
 182.4    =   CS   21 reinf active:C2
          1 2.3310E-01 6.075E-02 1.854E-01   0.000   0.000    210000   33.53
             6.270E-05 1.091E-01 3.986E-03   1.397   1.258     80769
 251      =   VFT
          =   Composit with materials:   1  30  31 300
          1 1.6422E-01 1.075E-01 1.947E-02   0.000   0.000    210000   63.26
             6.270E-05 4.627E-02 8.980E-03   0.218   0.113     80769
 251.1    =   CS    1 steel alone
          1 1.0696E-01 6.075E-02 9.037E-03   0.000   0.000    210000    8.40
             6.270E-05 2.882E-02 3.986E-03   0.400   0.400     80769
 251.2    =   CS   10 prefab. slab C1
          1 1.0696E-01 6.075E-02 9.037E-03   0.000   0.000    210000    8.40
             6.270E-05 2.882E-02 3.986E-03   0.400   0.400     80769
 251.3    =   CS   20 in-situ conc:C2
          1 1.0696E-01 6.075E-02 9.037E-03   0.000   0.000    210000    8.40
             6.270E-05 2.882E-02 3.986E-03   0.400   0.400     80769
```

SOFiSTiK AG - www.sofistik.de

Composite bridge 38+50+38, b=14.25m, 2x2HL1100R HISTAR460 , slab 0.30m C30/37

Cross-sections static properties

```
 No.    Mat      A[m2] Ay/Az/Ayz Iy/Iz/Iyz   ys/zs  y/z-sc   modules     gam
        NoR     It[m4]      [m2]      [m4]     [m]     [m]     [MPa]  [kN/m]
 251.4    =   CS   21 reinf active:C2
          1 1.0696E-01 6.075E-02 9.037E-03   0.000   0.000    210000    8.40
             6.270E-05 2.882E-02 3.986E-03   0.400   0.400     80769
 252      =   VFT
          =   Composit with materials:   1  30  31 300
          1 1.6422E-01 1.075E-01 1.947E-02   0.000   0.000    210000   63.26
             6.270E-05 4.627E-02 8.980E-03   0.218   0.113     80769
 252.1    =   CS    1 steel alone
          1 1.0696E-01 6.075E-02 9.037E-03   0.000   0.000    210000    8.40
             6.270E-05 2.882E-02 3.986E-03   0.400   0.400     80769
 252.2    =   CS   10 prefab. slab C1
          1 1.0696E-01 6.075E-02 9.037E-03   0.000   0.000    210000    8.40
             6.270E-05 2.882E-02 3.986E-03   0.400   0.400     80769
 252.3    =   CS   20 in-situ conc:C2
          1 1.0696E-01 6.075E-02 9.037E-03   0.000   0.000    210000    8.40
             6.270E-05 2.882E-02 3.986E-03   0.400   0.400     80769
 252.4    =   CS   21 reinf active:C2
          1 1.0696E-01 6.075E-02 9.037E-03   0.000   0.000    210000    8.40
             6.270E-05 2.882E-02 3.986E-03   0.400   0.400     80769
 253      =   VFT
          =   Composit with materials:   1  25 210  31 300
          1 1.1360E-01 6.454E-02 1.086E-02   0.000   0.000    210000   63.55
             6.270E-05 3.273E-02 4.484E-03   0.373   0.339     80769
 253.1    =   CS    1 steel alone
          1 1.0696E-01 6.075E-02 9.037E-03   0.000   0.000    210000    8.40
             6.270E-05 2.882E-02 3.986E-03   0.400   0.400     80769
 253.2    =   CS   10 prefab. slab C1
          1 1.0696E-01 6.075E-02 9.037E-03   0.000   0.000    210000    8.40
             6.270E-05 2.882E-02 3.986E-03   0.400   0.400     80769
 253.3    =   CS   20 in-situ conc:C2
          1 1.0696E-01 6.075E-02 9.037E-03   0.000   0.000    210000    8.40
             6.270E-05 2.882E-02 3.986E-03   0.400   0.400     80769
 253.4    =   CS   21 reinf active:C2
          1 1.0762E-01 6.075E-02 9.103E-03   0.000   0.000    210000    8.69
             6.270E-05 2.887E-02 3.986E-03   0.402   0.400     80769
 254      =   VFT (251)
          =   Composit with materials:   1  30  31 300
          1 4.8158E-01 3.119E-01 8.036E-02   0.000   0.000    210000   64.97
             6.270E-05 4.717E-02 1.456E+00   0.056  -0.148     80769
 254.1    =   CS    1 steel alone
          1 1.2870E-01 6.075E-02 2.634E-02   0.000   0.000    210000   10.10
             6.270E-05 5.070E-02 3.986E-03   0.609   0.609     80769
 254.2    =   CS   10 prefab. slab C1
          1 1.2870E-01 6.075E-02 2.634E-02   0.000   0.000    210000   10.10
             6.270E-05 5.070E-02 3.986E-03   0.609   0.609     80769
 254.3    =   CS   20 in-situ conc:C2
          1 1.2870E-01 6.075E-02 2.634E-02   0.000   0.000    210000   10.10
             6.270E-05 5.070E-02 3.986E-03   0.609   0.609     80769
 254.4    =   CS   21 reinf active:C2
          1 1.2870E-01 6.075E-02 2.634E-02   0.000   0.000    210000   10.10
             6.270E-05 5.070E-02 3.986E-03   0.609   0.609     80769
 255      =   VFT (251)
          =   Composit with materials:   1  30  31 300
          1 4.9488E-01 3.099E-01 1.291E-01   0.000   0.000    210000   66.18
             6.270E-05 6.169E-02 1.429E+00   0.118  -0.147     80769
 255.1    =   CS    1 steel alone
          1 1.4418E-01 6.075E-02 4.541E-02   0.000   0.000    210000   11.32
             6.270E-05 6.620E-02 3.986E-03   0.758   0.758     80769
 255.2    =   CS   10 prefab. slab C1
          1 1.4418E-01 6.075E-02 4.541E-02   0.000   0.000    210000   11.32
             6.270E-05 6.620E-02 3.986E-03   0.758   0.758     80769
 255.3    =   CS   20 in-situ conc:C2
          1 1.4418E-01 6.075E-02 4.541E-02   0.000   0.000    210000   11.32
             6.270E-05 6.620E-02 3.986E-03   0.758   0.758     80769
```

SOFiSTiK AG - www.sofistik.de

Composite bridge 38+50+38, b=14.25m, 2x2HL1100R HISTAR460 , slab 0.30m C30/37

Cross-sections static properties

```
 No.    Mat      A[m2] Ay/Az/Ayz Iy/Iz/Iyz   ys/zs  y/z-sc   modules     gam
        NoR     It[m4]      [m2]      [m4]     [m]     [m]     [MPa]  [kN/m]
 255.4    =   CS   21 reinf active:C2
          1 1.4418E-01 6.075E-02 4.541E-02   0.000   0.000    210000   11.32
             6.270E-05 6.620E-02 3.986E-03   0.758   0.758     80769
 256      =   VFT (251)
          =   Composit with materials:   1  30  31 300
          1 5.0818E-01 3.080E-01 1.925E-01   0.000   0.000    210000   67.40
             6.270E-05 7.630E-02 1.401E+00   0.185  -0.147     80769
 256.1    =   CS    1 steel alone
          1 1.5967E-01 6.075E-02 7.088E-02   0.000   0.000    210000   12.53
             6.270E-05 8.155E-02 3.986E-03   0.907   0.907     80769
 256.2    =   CS   10 prefab. slab C1
          1 1.5967E-01 6.075E-02 7.088E-02   0.000   0.000    210000   12.53
             6.270E-05 8.155E-02 3.986E-03   0.907   0.907     80769
 256.3    =   CS   20 in-situ conc:C2
          1 1.5967E-01 6.075E-02 7.088E-02   0.000   0.000    210000   12.53
             6.270E-05 8.155E-02 3.986E-03   0.907   0.907     80769
 256.4    =   CS   21 reinf active:C2
          1 1.5967E-01 6.075E-02 7.088E-02   0.000   0.000    210000   12.53
             6.270E-05 8.155E-02 3.986E-03   0.907   0.907     80769
 257      =   VFT (251)
          =   Composit with materials:   1  30  31 300
          1 4.8158E-01 3.119E-01 8.036E-02   0.000   0.000    210000   64.97
             6.270E-05 4.717E-02 1.456E+00   0.056  -0.148     80769
 257.1    =   CS    1 steel alone
          1 1.2870E-01 6.075E-02 2.634E-02   0.000   0.000    210000   10.10
             6.270E-05 5.070E-02 3.986E-03   0.609   0.609     80769
 257.2    =   CS   10 prefab. slab C1
          1 1.2870E-01 6.075E-02 2.634E-02   0.000   0.000    210000   10.10
             6.270E-05 5.070E-02 3.986E-03   0.609   0.609     80769
 257.3    =   CS   20 in-situ conc:C2
          1 1.2870E-01 6.075E-02 2.634E-02   0.000   0.000    210000   10.10
             6.270E-05 5.070E-02 3.986E-03   0.609   0.609     80769
 257.4    =   CS   21 reinf active:C2
          1 1.2870E-01 6.075E-02 2.634E-02   0.000   0.000    210000   10.10
             6.270E-05 5.070E-02 3.986E-03   0.609   0.609     80769
 258      =   VFT (251)
          =   Composit with materials:   1  30  31 300
          1 4.9483E-01 3.099E-01 1.289E-01   0.000   0.000    210000   66.18
             6.270E-05 6.164E-02 1.429E+00   0.117  -0.147     80769
 258.1    =   CS    1 steel alone
          1 1.4413E-01 6.075E-02 4.533E-02   0.000   0.000    210000   11.31
             6.270E-05 6.614E-02 3.986E-03   0.757   0.757     80769
 258.2    =   CS   10 prefab. slab C1
          1 1.4413E-01 6.075E-02 4.533E-02   0.000   0.000    210000   11.31
             6.270E-05 6.614E-02 3.986E-03   0.757   0.757     80769
 258.3    =   CS   20 in-situ conc:C2
          1 1.4413E-01 6.075E-02 4.533E-02   0.000   0.000    210000   11.31
             6.270E-05 6.614E-02 3.986E-03   0.757   0.757     80769
 258.4    =   CS   21 reinf active:C2
          1 1.4413E-01 6.075E-02 4.533E-02   0.000   0.000    210000   11.31
             6.270E-05 6.614E-02 3.986E-03   0.757   0.757     80769
 259      =   VFT (251)
          =   Composit with materials:   1  30  31 300
          1 5.0818E-01 3.080E-01 1.925E-01   0.000   0.000    210000   67.40
             6.270E-05 7.630E-02 1.401E+00   0.185  -0.147     80769
 259.1    =   CS    1 steel alone
          1 1.5967E-01 6.075E-02 7.088E-02   0.000   0.000    210000   12.53
             6.270E-05 8.155E-02 3.986E-03   0.907   0.907     80769
 259.2    =   CS   10 prefab. slab C1
          1 1.5967E-01 6.075E-02 7.088E-02   0.000   0.000    210000   12.53
             6.270E-05 8.155E-02 3.986E-03   0.907   0.907     80769
 259.3    =   CS   20 in-situ conc:C2
          1 1.5967E-01 6.075E-02 7.088E-02   0.000   0.000    210000   12.53
             6.270E-05 8.155E-02 3.986E-03   0.907   0.907     80769
```

SOFiSTiK AG - www.sofistik.de

Composite bridge 38+50+38, b=14.25m, 2x2HL1100R HISTAR460 , slab 0.30m C30/37

Cross-sections static properties

```
 No.    Mat      A[m2] Ay/Az/Ayz Iy/Iz/Iyz   ys/zs  y/z-sc   modules     gam
        NoR     It[m4]      [m2]      [m4]     [m]     [m]     [MPa]  [kN/m]
 259.4    =   CS   21 reinf active:C2
          1 1.5967E-01 6.075E-02 7.088E-02   0.000   0.000    210000   12.53
             6.270E-05 8.155E-02 3.986E-03   0.907   0.907     80769
 260      =   VFT (251)
          =   Composit with materials:   1  30  31 300
          1 4.9488E-01 3.099E-01 1.291E-01   0.000   0.000    210000   66.18
             6.270E-05 6.169E-02 1.429E+00   0.118  -0.147     80769
 260.1    =   CS    1 steel alone
          1 1.4418E-01 6.075E-02 4.541E-02   0.000   0.000    210000   11.32
             6.270E-05 6.620E-02 3.986E-03   0.758   0.758     80769
 260.2    =   CS   10 prefab. slab C1
          1 1.4418E-01 6.075E-02 4.541E-02   0.000   0.000    210000   11.32
             6.270E-05 6.620E-02 3.986E-03   0.758   0.758     80769
 260.3    =   CS   20 in-situ conc:C2
          1 1.4418E-01 6.075E-02 4.541E-02   0.000   0.000    210000   11.32
             6.270E-05 6.620E-02 3.986E-03   0.758   0.758     80769
 260.4    =   CS   21 reinf active:C2
          1 1.4418E-01 6.075E-02 4.541E-02   0.000   0.000    210000   11.32
             6.270E-05 6.620E-02 3.986E-03   0.758   0.758     80769
 261      =   VFT (253)
          =   Composit with materials:   1  25 210  31 300
          1 2.8372E-01 3.610E-02 2.931E-01   0.000   0.000    210000   91.18
             6.270E-05 8.592E-02 1.681E-01   1.218  -0.116     80769
 261.1    =   CS    1 steel alone
          1 2.0056E-01 6.075E-02 1.740E-01   0.000   0.000    210000   15.74
             6.270E-05 1.213E-01 3.986E-03   1.300   1.300     80769
 261.2    =   CS   10 prefab. slab C1
          1 2.0056E-01 6.075E-02 1.740E-01   0.000   0.000    210000   15.74
             6.270E-05 1.213E-01 3.986E-03   1.300   1.300     80769
 261.3    =   CS   20 in-situ conc:C2
          1 2.0056E-01 6.075E-02 1.740E-01   0.000   0.000    210000   15.74
             6.270E-05 1.213E-01 3.986E-03   1.300   1.300     80769
 261.4    =   CS   21 reinf active:C2
          1 2.4242E-01 6.075E-02 2.023E-01   0.000   0.000    210000   36.32
             6.270E-05 1.118E-01 3.986E-03   1.452   1.300     80769
 262      =   VFT (253)
          =   Composit with materials:   1  25 210  31 300
          1 2.8372E-01 3.610E-02 2.931E-01   0.000   0.000    210000   91.18
             6.270E-05 8.592E-02 1.681E-01   1.218  -0.116     80769
 262.1    =   CS    1 steel alone
          1 2.0056E-01 6.075E-02 1.740E-01   0.000   0.000    210000   15.74
             6.270E-05 1.213E-01 3.986E-03   1.300   1.300     80769
 262.2    =   CS   10 prefab. slab C1
          1 2.0056E-01 6.075E-02 1.740E-01   0.000   0.000    210000   15.74
             6.270E-05 1.213E-01 3.986E-03   1.300   1.300     80769
 262.3    =   CS   20 in-situ conc:C2
          1 2.0056E-01 6.075E-02 1.740E-01   0.000   0.000    210000   15.74
             6.270E-05 1.213E-01 3.986E-03   1.300   1.300     80769
 262.4    =   CS   21 reinf active:C2
          1 2.4242E-01 6.075E-02 2.023E-01   0.000   0.000    210000   36.32
             6.270E-05 1.118E-01 3.986E-03   1.452   1.300     80769
 263      =   VFT (253)
          =   Composit with materials:   1  25 210  31 300
          1 2.8172E-01 3.611E-02 2.879E-01   0.000   0.000    210000   90.58
             6.270E-05 8.516E-02 1.683E-01   1.207  -0.116     80769
 263.1    =   CS    1 steel alone
          1 1.9962E-01 6.075E-02 1.709E-01   0.000   0.000    210000   15.67
             6.270E-05 1.204E-01 3.986E-03   1.291   1.291     80769
 263.2    =   CS   10 prefab. slab C1
          1 1.9962E-01 6.075E-02 1.709E-01   0.000   0.000    210000   15.67
             6.270E-05 1.204E-01 3.986E-03   1.291   1.291     80769
 263.3    =   CS   20 in-situ conc:C2
          1 1.9962E-01 6.075E-02 1.709E-01   0.000   0.000    210000   15.67
             6.270E-05 1.204E-01 3.986E-03   1.291   1.291     80769
```

SOFiSTiK AG - www.sofistik.de

Composite bridge 38+50+38, b=14.25m, 2x2HL1100R HISTAR460 , slab 0.30m C30/37

Cross-sections static properties

```
 No.    Mat      A[m2] Ay/Az/Ayz Iy/Iz/Iyz   ys/zs  y/z-sc   modules     gam
        NoR     It[m4]      [m2]      [m4]     [m]     [m]     [MPa]  [kN/m]
 263.4    =   CS   21 reinf active:C2
          1 2.4040E-01 6.075E-02 1.986E-01   0.000   0.000    210000   35.71
             6.270E-05 1.112E-01 3.986E-03   1.440   1.291     80769
 264      =   VFT (253)
          =   Composit with materials:   1  25 210  31 300
          1 2.7971E-01 3.612E-02 2.828E-01   0.000   0.000    210000   89.97
             6.270E-05 8.439E-02 1.685E-01   1.195  -0.116     80769
 264.1    =   CS    1 steel alone
          1 1.9867E-01 6.075E-02 1.679E-01   0.000   0.000    210000   15.60
             6.270E-05 1.195E-01 3.986E-03   1.282   1.282     80769
 264.2    =   CS   10 prefab. slab C1
          1 1.9867E-01 6.075E-02 1.679E-01   0.000   0.000    210000   15.60
             6.270E-05 1.195E-01 3.986E-03   1.282   1.282     80769
 264.3    =   CS   20 in-situ conc:C2
          1 1.9867E-01 6.075E-02 1.679E-01   0.000   0.000    210000   15.60
             6.270E-05 1.195E-01 3.986E-03   1.282   1.282     80769
 264.4    =   CS   21 reinf active:C2
          1 2.3838E-01 6.075E-02 1.949E-01   0.000   0.000    210000   35.11
             6.270E-05 1.106E-01 3.986E-03   1.428   1.282     80769
 265      =   VFT (253)
          =   Composit with materials:   1  25 210  31 300
          1 2.7668E-01 3.614E-02 2.752E-01   0.000   0.000    210000   89.05
             6.270E-05 8.324E-02 1.688E-01   1.177  -0.117     80769
 265.1    =   CS    1 steel alone
          1 1.9725E-01 6.075E-02 1.635E-01   0.000   0.000    210000   15.48
             6.270E-05 1.181E-01 3.986E-03   1.268   1.268     80769
 265.2    =   CS   10 prefab. slab C1
          1 1.9725E-01 6.075E-02 1.635E-01   0.000   0.000    210000   15.48
             6.270E-05 1.181E-01 3.986E-03   1.268   1.268     80769
 265.3    =   CS   20 in-situ conc:C2
          1 1.9725E-01 6.075E-02 1.635E-01   0.000   0.000    210000   15.48
             6.270E-05 1.181E-01 3.986E-03   1.268   1.268     80769
 265.4    =   CS   21 reinf active:C2
          1 2.3532E-01 6.075E-02 1.893E-01   0.000   0.000    210000   34.19
             6.270E-05 1.098E-01 3.986E-03   1.410   1.268     80769
 266      =   VFT (253)
          =   Composit with materials:   1  25 210  31 300
          1 2.7365E-01 3.616E-02 2.677E-01   0.000   0.000    210000   88.14
             6.270E-05 8.207E-02 1.691E-01   1.159  -0.117     80769
 266.1    =   CS    1 steel alone
          1 1.9583E-01 6.075E-02 1.591E-01   0.000   0.000    210000   15.37
             6.270E-05 1.167E-01 3.986E-03   1.255   1.255     80769
 266.2    =   CS   10 prefab. slab C1
          1 1.9583E-01 6.075E-02 1.591E-01   0.000   0.000    210000   15.37
             6.270E-05 1.167E-01 3.986E-03   1.255   1.255     80769
 266.3    =   CS   20 in-situ conc:C2
          1 1.9583E-01 6.075E-02 1.591E-01   0.000   0.000    210000   15.37
             6.270E-05 1.167E-01 3.986E-03   1.255   1.255     80769
 266.4    =   CS   21 reinf active:C2
          1 2.3227E-01 6.075E-02 1.839E-01   0.000   0.000    210000   33.28
             6.270E-05 1.089E-01 3.986E-03   1.392   1.255     80769
 267      =   VFT (253)
          =   Composit with materials:   1  25 210  31 300
          1 2.6906E-01 3.619E-02 2.564E-01   0.000   0.000    210000   86.75
             6.270E-05 8.030E-02 1.695E-01   1.132  -0.117     80769
 267.1    =   CS    1 steel alone
          1 1.9367E-01 6.075E-02 1.526E-01   0.000   0.000    210000   15.20
             6.270E-05 1.147E-01 3.986E-03   1.234   1.234     80769
 267.2    =   CS   10 prefab. slab C1
          1 1.9367E-01 6.075E-02 1.526E-01   0.000   0.000    210000   15.20
             6.270E-05 1.147E-01 3.986E-03   1.234   1.234     80769
 267.3    =   CS   20 in-situ conc:C2
          1 1.9367E-01 6.075E-02 1.526E-01   0.000   0.000    210000   15.20
             6.270E-05 1.147E-01 3.986E-03   1.234   1.234     80769
```

SOFiSTiK AG - www.sofistik.de

Composite bridge 38+50+38, b=14.25m, 2x2HL1100R HISTAR460 , slab 0.30m C30/37

Cross-sections static properties

```
 No.    Mat      A[m2] Ay/Az/Ayz Iy/Iz/Iyz   ys/zs  y/z-sc   modules     gam
        NoR     It[m4]      [m2]      [m4]     [m]     [m]     [MPa]  [kN/m]
 267.4    =   CS   21 reinf active:C2
          1 2.2764E-01 6.075E-02 1.758E-01   0.000   0.000    210000   31.89
             6.270E-05 1.076E-01 3.986E-03   1.365   1.234     80769
 268      =   VFT (253)
          =   Composit with materials:   1  25 210  31 300
          1 2.6447E-01 3.621E-02 2.453E-01   0.000   0.000    210000   85.37
             6.270E-05 7.851E-02 1.700E-01   1.104  -0.118     80769
 268.1    =   CS    1 steel alone
          1 1.9152E-01 6.075E-02 1.463E-01   0.000   0.000    210000   15.03
             6.270E-05 1.126E-01 3.986E-03   1.213   1.213     80769
 268.2    =   CS   10 prefab. slab C1
          1 1.9152E-01 6.075E-02 1.463E-01   0.000   0.000    210000   15.03
             6.270E-05 1.126E-01 3.986E-03   1.213   1.213     80769
 268.3    =   CS   20 in-situ conc:C2
          1 1.9152E-01 6.075E-02 1.463E-01   0.000   0.000    210000   15.03
             6.270E-05 1.126E-01 3.986E-03   1.213   1.213     80769
 268.4    =   CS   21 reinf active:C2
          1 2.2301E-01 6.075E-02 1.678E-01   0.000   0.000    210000   30.50
             6.270E-05 1.063E-01 3.986E-03   1.337   1.213     80769
 269      =   VFT (253)
          =   Composit with materials:   1  25 210  31 300
          1 2.5700E-01 3.626E-02 2.278E-01   0.000   0.000    210000   83.11
             6.270E-05 7.555E-02 1.707E-01   1.058  -0.119     80769
 269.1    =   CS    1 steel alone
          1 1.8801E-01 6.075E-02 1.363E-01   0.000   0.000    210000   14.76
             6.270E-05 1.092E-01 3.986E-03   1.179   1.179     80769
 269.2    =   CS   10 prefab. slab C1
          1 1.8801E-01 6.075E-02 1.363E-01   0.000   0.000    210000   14.76
             6.270E-05 1.092E-01 3.986E-03   1.179   1.179     80769
 269.3    =   CS   20 in-situ conc:C2
          1 1.8801E-01 6.075E-02 1.363E-01   0.000   0.000    210000   14.76
             6.270E-05 1.092E-01 3.986E-03   1.179   1.179     80769
 269.4    =   CS   21 reinf active:C2
          1 2.1548E-01 6.075E-02 1.553E-01   0.000   0.000    210000   28.25
             6.270E-05 1.041E-01 3.986E-03   1.291   1.179     80769
 270      =   VFT (253)
          =   Composit with materials:   1  25 210  31 300
          1 2.4953E-01 3.631E-02 2.107E-01   0.000   0.000    210000   80.86
             6.270E-05 7.252E-02 1.714E-01   1.012  -0.120     80769
 270.1    =   CS    1 steel alone
          1 1.8450E-01 6.075E-02 1.268E-01   0.000   0.000    210000   14.48
             6.270E-05 1.058E-01 3.986E-03   1.146   1.146     80769
 270.2    =   CS   10 prefab. slab C1
          1 1.8450E-01 6.075E-02 1.268E-01   0.000   0.000    210000   14.48
             6.270E-05 1.058E-01 3.986E-03   1.146   1.146     80769
 270.3    =   CS   20 in-situ conc:C2
          1 1.8450E-01 6.075E-02 1.268E-01   0.000   0.000    210000   14.48
             6.270E-05 1.058E-01 3.986E-03   1.146   1.146     80769
 270.4    =   CS   21 reinf active:C2
          1 2.0795E-01 6.075E-02 1.431E-01   0.000   0.000    210000   26.00
             6.270E-05 1.019E-01 3.986E-03   1.245   1.146     80769
 271      =   VFT (253)
          =   Composit with materials:   1  25 210  31 300
          1 2.3925E-01 3.637E-02 1.880E-01   0.000   0.000    210000   77.75
             6.270E-05 6.820E-02 1.725E-01   0.947  -0.121     80769
 271.1    =   CS    1 steel alone
          1 1.7968E-01 6.075E-02 1.144E-01   0.000   0.000    210000   14.10
             6.270E-05 1.011E-01 3.986E-03   1.099   1.099     80769
 271.2    =   CS   10 prefab. slab C1
          1 1.7968E-01 6.075E-02 1.144E-01   0.000   0.000    210000   14.10
             6.270E-05 1.011E-01 3.986E-03   1.099   1.099     80769
 271.3    =   CS   20 in-situ conc:C2
          1 1.7968E-01 6.075E-02 1.144E-01   0.000   0.000    210000   14.10
             6.270E-05 1.011E-01 3.986E-03   1.099   1.099     80769
```

SOFiSTiK AG - www.sofistik.de

Composite bridge 38+50+38, b=14.25m, 2x2HL1100R HISTAR460 , slab 0.30m C30/37

Cross-sections static properties

```
 No.    Mat      A[m2] Ay/Az/Ayz Iy/Iz/Iyz   ys/zs  y/z-sc   modules     gam
        NoR     It[m4]      [m2]      [m4]     [m]     [m]     [MPa]  [kN/m]
 271.4    =   CS   21 reinf active:C2
          1 1.9759E-01 6.075E-02 1.270E-01   0.000   0.000    210000   22.89
             6.270E-05 9.881E-02 3.986E-03   1.179   1.099     80769
 272      =   VFT (253)
          =   Composit with materials:   1  25 210  31 300
          1 2.2897E-01 3.643E-02 1.661E-01   0.000   0.000    210000   74.65
             6.270E-05 6.363E-02 1.735E-01   0.881  -0.122     80769
 272.1    =   CS    1 steel alone
          1 1.7485E-01 6.075E-02 1.027E-01   0.000   0.000    210000   13.73
             6.270E-05 9.643E-02 3.986E-03   1.053   1.053     80769
 272.2    =   CS   10 prefab. slab C1
          1 1.7485E-01 6.075E-02 1.027E-01   0.000   0.000    210000   13.73
             6.270E-05 9.643E-02 3.986E-03   1.053   1.053     80769
 272.3    =   CS   20 in-situ conc:C2
          1 1.7485E-01 6.075E-02 1.027E-01   0.000   0.000    210000   13.73
             6.270E-05 9.643E-02 3.986E-03   1.053   1.053     80769
 272.4    =   CS   21 reinf active:C2
          1 1.8722E-01 6.075E-02 1.116E-01   0.000   0.000    210000   19.79
             6.270E-05 9.543E-02 3.986E-03   1.111   1.053     80769
 273      =   VFT (253)
          =   Composit with materials:   1  25 210  31 300
          1 2.2897E-01 3.643E-02 1.661E-01   0.000   0.000    210000   74.65
             6.270E-05 6.363E-02 1.735E-01   0.881  -0.122     80769
 273.1    =   CS    1 steel alone
          1 1.7485E-01 6.075E-02 1.027E-01   0.000   0.000    210000   13.73
             6.270E-05 9.643E-02 3.986E-03   1.053   1.053     80769
 273.2    =   CS   10 prefab. slab C1
          1 1.7485E-01 6.075E-02 1.027E-01   0.000   0.000    210000   13.73
             6.270E-05 9.643E-02 3.986E-03   1.053   1.053     80769
 273.3    =   CS   20 in-situ conc:C2
          1 1.7485E-01 6.075E-02 1.027E-01   0.000   0.000    210000   13.73
             6.270E-05 9.643E-02 3.986E-03   1.053   1.053     80769
 273.4    =   CS   21 reinf active:C2
          1 1.8722E-01 6.075E-02 1.116E-01   0.000   0.000    210000   19.79
             6.270E-05 9.543E-02 3.986E-03   1.111   1.053     80769
 274      =   VFT (253)
          =   Composit with materials:   1  25 210  31 300
          1 2.1298E-01 3.653E-02 1.335E-01   0.000   0.000    210000   69.85
             6.270E-05 5.580E-02 1.751E-01   0.773  -0.124     80769
 274.1    =   CS    1 steel alone
          1 1.6726E-01 6.075E-02 8.590E-02   0.000   0.000    210000   13.13
             6.270E-05 8.901E-02 3.986E-03   0.980   0.980     80769
 274.2    =   CS   10 prefab. slab C1
          1 1.6726E-01 6.075E-02 8.590E-02   0.000   0.000    210000   13.13
             6.270E-05 8.901E-02 3.986E-03   0.980   0.980     80769
 274.3    =   CS   20 in-situ conc:C2
          1 1.6726E-01 6.075E-02 8.590E-02   0.000   0.000    210000   13.13
             6.270E-05 8.901E-02 3.986E-03   0.980   0.980     80769
 274.4    =   CS   21 reinf active:C2
          1 1.7110E-01 6.075E-02 8.878E-02   0.000   0.000    210000   14.99
             6.270E-05 8.912E-02 3.986E-03   0.999   0.980     80769
 275      =   VFT (253)
          =   Composit with materials:   1  25 210  31 300
          1 2.0490E-01 3.663E-02 1.116E-01   0.000   0.000    210000   68.95
             6.270E-05 4.866E-02 1.767E-01   0.703  -0.126     80769
 275.1    =   CS    1 steel alone
          1 1.5967E-01 6.075E-02 7.088E-02   0.000   0.000    210000   12.53
             6.270E-05 8.155E-02 3.986E-03   0.907   0.907     80769
 275.2    =   CS   10 prefab. slab C1
          1 1.5967E-01 6.075E-02 7.088E-02   0.000   0.000    210000   12.53
             6.270E-05 8.155E-02 3.986E-03   0.907   0.907     80769
 275.3    =   CS   20 in-situ conc:C2
          1 1.5967E-01 6.075E-02 7.088E-02   0.000   0.000    210000   12.53
             6.270E-05 8.155E-02 3.986E-03   0.907   0.907     80769
```

SOFiSTiK AG - www.sofistik.de

Composite bridge 38+50+38, b=14.25m, 2x2HL1100R HISTAR460 , slab 0.30m C30/37

Cross-sections static properties

```
 No.    Mat      A[m2] Ay/Az/Ayz Iy/Iz/Iyz   ys/zs  y/z-sc   modules     gam
        NoR     It[m4]      [m2]      [m4]     [m]     [m]     [MPa]  [kN/m]
 275.4    =   CS   21 reinf active:C2
          1 1.6289E-01 6.075E-02 7.294E-02   0.000   0.000    210000   14.09
             6.270E-05 8.167E-02 3.986E-03   0.923   0.907     80769
 276      =   VFT (253)
          =   Composit with materials:   1  25 210  31 300
          1 2.6805E-01 3.619E-02 2.540E-01   0.000   0.000    210000   86.45
             6.270E-05 7.991E-02 1.696E-01   1.125  -0.118     80769
 276.1    =   CS    1 steel alone
          1 1.9320E-01 6.075E-02 1.512E-01   0.000   0.000    210000   15.17
             6.270E-05 1.142E-01 3.986E-03   1.229   1.229     80769
 276.2    =   CS   10 prefab. slab C1
          1 1.9320E-01 6.075E-02 1.512E-01   0.000   0.000    210000   15.17
             6.270E-05 1.142E-01 3.986E-03   1.229   1.229     80769
 276.3    =   CS   20 in-situ conc:C2
          1 1.9320E-01 6.075E-02 1.512E-01   0.000   0.000    210000   15.17
             6.270E-05 1.142E-01 3.986E-03   1.229   1.229     80769
 276.4    =   CS   21 reinf active:C2
          1 2.2663E-01 6.075E-02 1.740E-01   0.000   0.000    210000   31.59
             6.270E-05 1.073E-01 3.986E-03   1.359   1.229     80769
 277      =   VFT (253)
          =   Composit with materials:   1  25 210  31 300
          1 2.5238E-01 3.629E-02 2.172E-01   0.000   0.000    210000   81.72
             6.270E-05 7.369E-02 1.712E-01   1.030  -0.120     80769
 277.1    =   CS    1 steel alone
          1 1.8584E-01 6.075E-02 1.304E-01   0.000   0.000    210000   14.59
             6.270E-05 1.071E-01 3.986E-03   1.158   1.158     80769
 277.2    =   CS   10 prefab. slab C1
          1 1.8584E-01 6.075E-02 1.304E-01   0.000   0.000    210000   14.59
             6.270E-05 1.071E-01 3.986E-03   1.158   1.158     80769
 277.3    =   CS   20 in-situ conc:C2
          1 1.8584E-01 6.075E-02 1.304E-01   0.000   0.000    210000   14.59
             6.270E-05 1.071E-01 3.986E-03   1.158   1.158     80769
 277.4    =   CS   21 reinf active:C2
          1 2.1083E-01 6.075E-02 1.477E-01   0.000   0.000    210000   26.86
             6.270E-05 1.028E-01 3.986E-03   1.262   1.158     80769
 278      =   VFT (253)
          =   Composit with materials:   1  25 210  31 300
          1 2.2452E-01 3.646E-02 1.569E-01   0.000   0.000    210000   73.31
             6.270E-05 6.156E-02 1.739E-01   0.852  -0.123     80769
 278.1    =   CS    1 steel alone
          1 1.7276E-01 6.075E-02 9.790E-02   0.000   0.000    210000   13.56
             6.270E-05 9.439E-02 3.986E-03   1.033   1.033     80769
 278.2    =   CS   10 prefab. slab C1
          1 1.7276E-01 6.075E-02 9.790E-02   0.000   0.000    210000   13.56
             6.270E-05 9.439E-02 3.986E-03   1.033   1.033     80769
 278.3    =   CS   20 in-situ conc:C2
          1 1.7276E-01 6.075E-02 9.790E-02   0.000   0.000    210000   13.56
             6.270E-05 9.439E-02 3.986E-03   1.033   1.033     80769
 278.4    =   CS   21 reinf active:C2
          1 1.8274E-01 6.075E-02 1.052E-01   0.000   0.000    210000   18.44
             6.270E-05 9.384E-02 3.986E-03   1.081   1.033     80769
 279      =   VFT (253)
          =   Composit with materials:   1  25 210  31 300
          1 2.0490E-01 3.663E-02 1.116E-01   0.000   0.000    210000   68.95
             6.270E-05 4.866E-02 1.767E-01   0.703  -0.126     80769
 279.1    =   CS    1 steel alone
          1 1.5967E-01 6.075E-02 7.088E-02   0.000   0.000    210000   12.53
             6.270E-05 8.155E-02 3.986E-03   0.907   0.907     80769
 279.2    =   CS   10 prefab. slab C1
          1 1.5967E-01 6.075E-02 7.088E-02   0.000   0.000    210000   12.53
             6.270E-05 8.155E-02 3.986E-03   0.907   0.907     80769
 279.3    =   CS   20 in-situ conc:C2
          1 1.5967E-01 6.075E-02 7.088E-02   0.000   0.000    210000   12.53
             6.270E-05 8.155E-02 3.986E-03   0.907   0.907     80769
```

SOFiSTiK AG - www.sofistik.de

Composite bridge 38+50+38, b=14.25m, 2x2HL1100R HISTAR460 , slab 0.30m C30/37

Cross-sections static properties

```
 No.    Mat      A[m2] Ay/Az/Ayz Iy/Iz/Iyz   ys/zs  y/z-sc   modules     gam
        NoR     It[m4]      [m2]      [m4]     [m]     [m]     [MPa]  [kN/m]
 279.4    =   CS   21 reinf active:C2
          1 1.6289E-01 6.075E-02 7.294E-02   0.000   0.000    210000   14.09
             6.270E-05 8.167E-02 3.986E-03   0.923   0.907     80769
 280      =   VFT (253)
          =   Composit with materials:   1  25 210  31 300
          1 2.1276E-01 3.654E-02 1.328E-01   0.000   0.000    210000   69.83
             6.270E-05 5.559E-02 1.752E-01   0.771  -0.124     80769
 280.1    =   CS    1 steel alone
          1 1.6705E-01 6.075E-02 8.546E-02   0.000   0.000    210000   13.11
             6.270E-05 8.880E-02 3.986E-03   0.978   0.978     80769
 280.2    =   CS   10 prefab. slab C1
          1 1.6705E-01 6.075E-02 8.546E-02   0.000   0.000    210000   13.11
             6.270E-05 8.880E-02 3.986E-03   0.978   0.978     80769
 280.3    =   CS   20 in-situ conc:C2
          1 1.6705E-01 6.075E-02 8.546E-02   0.000   0.000    210000   13.11
             6.270E-05 8.880E-02 3.986E-03   0.978   0.978     80769
 280.4    =   CS   21 reinf active:C2
          1 1.7087E-01 6.075E-02 8.831E-02   0.000   0.000    210000   14.97
             6.270E-05 8.891E-02 3.986E-03   0.997   0.978     80769
 281      =   VFT (253)
          =   Composit with materials:   1  25 210  31 300
          1 2.1761E-01 3.650E-02 1.428E-01   0.000   0.000    210000   71.22
             6.270E-05 5.821E-02 1.746E-01   0.805  -0.124     80769
 281.1    =   CS    1 steel alone
          1 1.6951E-01 6.075E-02 9.070E-02   0.000   0.000    210000   13.31
             6.270E-05 9.121E-02 3.986E-03   1.001   1.001     80769
 281.2    =   CS   10 prefab. slab C1
          1 1.6951E-01 6.075E-02 9.070E-02   0.000   0.000    210000   13.31
             6.270E-05 9.121E-02 3.986E-03   1.001   1.001     80769
 281.3    =   CS   20 in-situ conc:C2
          1 1.6951E-01 6.075E-02 9.070E-02   0.000   0.000    210000   13.31
             6.270E-05 9.121E-02 3.986E-03   1.001   1.001     80769
 281.4    =   CS   21 reinf active:C2
          1 1.7576E-01 6.075E-02 9.534E-02   0.000   0.000    210000   16.35
             6.270E-05 9.117E-02 3.986E-03   1.033   1.001     80769
 282      =   VFT (253)
          =   Composit with materials:   1  25 210  31 300
          1 2.3664E-01 3.639E-02 1.824E-01   0.000   0.000    210000   76.96
             6.270E-05 6.706E-02 1.727E-01   0.931  -0.121     80769
 282.1    =   CS    1 steel alone
          1 1.7845E-01 6.075E-02 1.113E-01   0.000   0.000    210000   14.01
             6.270E-05 9.993E-02 3.986E-03   1.087   1.087     80769
 282.2    =   CS   10 prefab. slab C1
          1 1.7845E-01 6.075E-02 1.113E-01   0.000   0.000    210000   14.01
             6.270E-05 9.993E-02 3.986E-03   1.087   1.087     80769
 282.3    =   CS   20 in-situ conc:C2
          1 1.7845E-01 6.075E-02 1.113E-01   0.000   0.000    210000   14.01
             6.270E-05 9.993E-02 3.986E-03   1.087   1.087     80769
 282.4    =   CS   21 reinf active:C2
          1 1.9495E-01 6.075E-02 1.231E-01   0.000   0.000    210000   22.10
             6.270E-05 9.798E-02 3.986E-03   1.162   1.087     80769
 283      =   VFT (253)
          =   Composit with materials:   1  25 210  31 300
          1 2.5093E-01 3.630E-02 2.139E-01   0.000   0.000    210000   81.28
             6.270E-05 7.309E-02 1.713E-01   1.021  -0.120     80769
 283.1    =   CS    1 steel alone
          1 1.8516E-01 6.075E-02 1.285E-01   0.000   0.000    210000   14.54
             6.270E-05 1.065E-01 3.986E-03   1.152   1.152     80769
 283.2    =   CS   10 prefab. slab C1
          1 1.8516E-01 6.075E-02 1.285E-01   0.000   0.000    210000   14.54
             6.270E-05 1.065E-01 3.986E-03   1.152   1.152     80769
 283.3    =   CS   20 in-situ conc:C2
          1 1.8516E-01 6.075E-02 1.285E-01   0.000   0.000    210000   14.54
             6.270E-05 1.065E-01 3.986E-03   1.152   1.152     80769
```

SOFiSTiK AG - www.sofistik.de

Composite bridge 38+50+38, b=14.25m, 2x2HL1100R HISTAR460 , slab 0.30m C30/37

Cross-sections static properties

```
 No.    Mat      A[m2] Ay/Az/Ayz Iy/Iz/Iyz   ys/zs  y/z-sc   modules     gam
        NoR     It[m4]      [m2]      [m4]     [m]     [m]     [MPa]  [kN/m]
 283.4    =   CS   21 reinf active:C2
          1 2.0936E-01 6.075E-02 1.453E-01   0.000   0.000    210000   26.42
             6.270E-05 1.023E-01 3.986E-03   1.253   1.152     80769
 284      =   VFT (253)
          =   Composit with materials:   1  25 210  31 300
          1 2.6522E-01 3.621E-02 2.472E-01   0.000   0.000    210000   85.60
             6.270E-05 7.880E-02 1.699E-01   1.108  -0.118     80769
 284.1    =   CS    1 steel alone
          1 1.9187E-01 6.075E-02 1.473E-01   0.000   0.000    210000   15.06
             6.270E-05 1.129E-01 3.986E-03   1.216   1.216     80769
 284.2    =   CS   10 prefab. slab C1
          1 1.9187E-01 6.075E-02 1.473E-01   0.000   0.000    210000   15.06
             6.270E-05 1.129E-01 3.986E-03   1.216   1.216     80769
 284.3    =   CS   20 in-situ conc:C2
          1 1.9187E-01 6.075E-02 1.473E-01   0.000   0.000    210000   15.06
             6.270E-05 1.129E-01 3.986E-03   1.216   1.216     80769
 284.4    =   CS   21 reinf active:C2
          1 2.2377E-01 6.075E-02 1.691E-01   0.000   0.000    210000   30.73
             6.270E-05 1.065E-01 3.986E-03   1.342   1.216     80769
 285      =   VFT (253)
          =   Composit with materials:   1  25 210  31 300
          1 2.7392E-01 3.616E-02 2.683E-01   0.000   0.000    210000   88.22
             6.270E-05 8.218E-02 1.690E-01   1.161  -0.117     80769
 285.1    =   CS    1 steel alone
          1 1.9596E-01 6.075E-02 1.595E-01   0.000   0.000    210000   15.38
             6.270E-05 1.169E-01 3.986E-03   1.256   1.256     80769
 285.2    =   CS   10 prefab. slab C1
          1 1.9596E-01 6.075E-02 1.595E-01   0.000   0.000    210000   15.38
             6.270E-05 1.169E-01 3.986E-03   1.256   1.256     80769
 285.3    =   CS   20 in-situ conc:C2
          1 1.9596E-01 6.075E-02 1.595E-01   0.000   0.000    210000   15.38
             6.270E-05 1.169E-01 3.986E-03   1.256   1.256     80769
 285.4    =   CS   21 reinf active:C2
          1 2.3254E-01 6.075E-02 1.844E-01   0.000   0.000    210000   33.36
             6.270E-05 1.090E-01 3.986E-03   1.394   1.256     80769
 351      =   VFT
          =   Composit with materials:   1  30  31 300
          1 1.6422E-01 1.075E-01 1.947E-02   0.000   0.000    210000   63.26
             6.270E-05 4.627E-02 8.980E-03   0.218   0.113     80769
 351.1    =   CS    1 steel alone
          1 1.0696E-01 6.075E-02 9.037E-03   0.000   0.000    210000    8.40
             6.270E-05 2.882E-02 3.986E-03   0.400   0.400     80769
 351.2    =   CS   10 prefab. slab C1
          1 1.0696E-01 6.075E-02 9.037E-03   0.000   0.000    210000    8.40
             6.270E-05 2.882E-02 3.986E-03   0.400   0.400     80769
 351.3    =   CS   20 in-situ conc:C2
          1 1.0696E-01 6.075E-02 9.037E-03   0.000   0.000    210000    8.40
             6.270E-05 2.882E-02 3.986E-03   0.400   0.400     80769
 351.4    =   CS   21 reinf active:C2
          1 1.0696E-01 6.075E-02 9.037E-03   0.000   0.000    210000    8.40
             6.270E-05 2.882E-02 3.986E-03   0.400   0.400     80769
 352      =   VFT
          =   Composit with materials:   1  30  31 300
          1 1.6422E-01 1.075E-01 1.947E-02   0.000   0.000    210000   63.26
             6.270E-05 4.627E-02 8.980E-03   0.218   0.113     80769
 352.1    =   CS    1 steel alone
          1 1.0696E-01 6.075E-02 9.037E-03   0.000   0.000    210000    8.40
             6.270E-05 2.882E-02 3.986E-03   0.400   0.400     80769
 352.2    =   CS   10 prefab. slab C1
          1 1.0696E-01 6.075E-02 9.037E-03   0.000   0.000    210000    8.40
             6.270E-05 2.882E-02 3.986E-03   0.400   0.400     80769
 352.3    =   CS   20 in-situ conc:C2
          1 1.0696E-01 6.075E-02 9.037E-03   0.000   0.000    210000    8.40
             6.270E-05 2.882E-02 3.986E-03   0.400   0.400     80769
```

SOFiSTiK AG - www.sofistik.de

Composite bridge 38+50+38, b=14.25m, 2x2HL1100R HISTAR460 , slab 0.30m C30/37

Cross-sections static properties

```
 No.    Mat      A[m2] Ay/Az/Ayz Iy/Iz/Iyz   ys/zs  y/z-sc   modules     gam
        NoR     It[m4]      [m2]      [m4]     [m]     [m]     [MPa]  [kN/m]
 352.4    =   CS   21 reinf active:C2
          1 1.0696E-01 6.075E-02 9.037E-03   0.000   0.000    210000    8.40
             6.270E-05 2.882E-02 3.986E-03   0.400   0.400     80769
 353      =   VFT
          =   Composit with materials:   1  25 210  31 300
          1 1.1360E-01 6.454E-02 1.086E-02   0.000   0.000    210000   63.55
             6.270E-05 3.273E-02 4.484E-03   0.373   0.339     80769
 353.1    =   CS    1 steel alone
          1 1.0696E-01 6.075E-02 9.037E-03   0.000   0.000    210000    8.40
             6.270E-05 2.882E-02 3.986E-03   0.400   0.400     80769
 353.2    =   CS   10 prefab. slab C1
          1 1.0696E-01 6.075E-02 9.037E-03   0.000   0.000    210000    8.40
             6.270E-05 2.882E-02 3.986E-03   0.400   0.400     80769
 353.3    =   CS   20 in-situ conc:C2
          1 1.0696E-01 6.075E-02 9.037E-03   0.000   0.000    210000    8.40
             6.270E-05 2.882E-02 3.986E-03   0.400   0.400     80769
 353.4    =   CS   21 reinf active:C2
          1 1.0762E-01 6.075E-02 9.103E-03   0.000   0.000    210000    8.69
             6.270E-05 2.887E-02 3.986E-03   0.402   0.400     80769
 354      =   VFT (351)
          =   Composit with materials:   1  30  31 300
          1 4.8158E-01 3.119E-01 8.036E-02   0.000   0.000    210000   64.97
             6.270E-05 4.717E-02 1.456E+00   0.056  -0.148     80769
 354.1    =   CS    1 steel alone
          1 1.2870E-01 6.075E-02 2.634E-02   0.000   0.000    210000   10.10
             6.270E-05 5.070E-02 3.986E-03   0.609   0.609     80769
 354.2    =   CS   10 prefab. slab C1
          1 1.2870E-01 6.075E-02 2.634E-02   0.000   0.000    210000   10.10
             6.270E-05 5.070E-02 3.986E-03   0.609   0.609     80769
 354.3    =   CS   20 in-situ conc:C2
          1 1.2870E-01 6.075E-02 2.634E-02   0.000   0.000    210000   10.10
             6.270E-05 5.070E-02 3.986E-03   0.609   0.609     80769
 354.4    =   CS   21 reinf active:C2
          1 1.2870E-01 6.075E-02 2.634E-02   0.000   0.000    210000   10.10
             6.270E-05 5.070E-02 3.986E-03   0.609   0.609     80769
 355      =   VFT (351)
          =   Composit with materials:   1  30  31 300
          1 4.8158E-01 3.119E-01 8.036E-02   0.000   0.000    210000   64.97
             6.270E-05 4.717E-02 1.456E+00   0.056  -0.148     80769
 355.1    =   CS    1 steel alone
          1 1.2870E-01 6.075E-02 2.634E-02   0.000   0.000    210000   10.10
             6.270E-05 5.070E-02 3.986E-03   0.609   0.609     80769
 355.2    =   CS   10 prefab. slab C1
          1 1.2870E-01 6.075E-02 2.634E-02   0.000   0.000    210000   10.10
             6.270E-05 5.070E-02 3.986E-03   0.609   0.609     80769
 355.3    =   CS   20 in-situ conc:C2
          1 1.2870E-01 6.075E-02 2.634E-02   0.000   0.000    210000   10.10
             6.270E-05 5.070E-02 3.986E-03   0.609   0.609     80769
 355.4    =   CS   21 reinf active:C2
          1 1.2870E-01 6.075E-02 2.634E-02   0.000   0.000    210000   10.10
             6.270E-05 5.070E-02 3.986E-03   0.609   0.609     80769
 356      =   VFT (351)
          =   Composit with materials:   1  30  31 300
          1 5.1020E-01 3.098E-01 1.927E-01   0.000   0.000    210000   67.40
             6.270E-05 7.613E-02 1.426E+00   0.184  -0.147     80769
 356.1    =   CS    1 steel alone
          1 1.5967E-01 6.075E-02 7.088E-02   0.000   0.000    210000   12.53
             6.270E-05 8.155E-02 3.986E-03   0.907   0.907     80769
 356.2    =   CS   10 prefab. slab C1
          1 1.5967E-01 6.075E-02 7.088E-02   0.000   0.000    210000   12.53
             6.270E-05 8.155E-02 3.986E-03   0.907   0.907     80769
 356.3    =   CS   20 in-situ conc:C2
          1 1.5967E-01 6.075E-02 7.088E-02   0.000   0.000    210000   12.53
             6.270E-05 8.155E-02 3.986E-03   0.907   0.907     80769
```

SOFiSTiK AG - www.sofistik.de

Composite bridge 38+50+38, b=14.25m, 2x2HL1100R HISTAR460 , slab 0.30m C30/37

Cross-sections static properties

```
 No.    Mat      A[m2] Ay/Az/Ayz Iy/Iz/Iyz   ys/zs  y/z-sc   modules     gam
        NoR     It[m4]      [m2]      [m4]     [m]     [m]     [MPa]  [kN/m]
 356.4    =   CS   21 reinf active:C2
          1 1.5967E-01 6.075E-02 7.088E-02   0.000   0.000    210000   12.53
             6.270E-05 8.155E-02 3.986E-03   0.907   0.907     80769
 357      =   VFT (351)
          =   Composit with materials:   1  30  31 300
          1 4.9707E-01 3.119E-01 1.293E-01   0.000   0.000    210000   66.18
             6.270E-05 6.153E-02 1.456E+00   0.116  -0.147     80769
 357.1    =   CS    1 steel alone
          1 1.4418E-01 6.075E-02 4.541E-02   0.000   0.000    210000   11.32
             6.270E-05 6.620E-02 3.986E-03   0.758   0.758     80769
 357.2    =   CS   10 prefab. slab C1
          1 1.4418E-01 6.075E-02 4.541E-02   0.000   0.000    210000   11.32
             6.270E-05 6.620E-02 3.986E-03   0.758   0.758     80769
 357.3    =   CS   20 in-situ conc:C2
          1 1.4418E-01 6.075E-02 4.541E-02   0.000   0.000    210000   11.32
             6.270E-05 6.620E-02 3.986E-03   0.758   0.758     80769
 357.4    =   CS   21 reinf active:C2
          1 1.4418E-01 6.075E-02 4.541E-02   0.000   0.000    210000   11.32
             6.270E-05 6.620E-02 3.986E-03   0.758   0.758     80769
 358      =   VFT (351)
          =   Composit with materials:   1  30  31 300
          1 5.1020E-01 3.098E-01 1.927E-01   0.000   0.000    210000   67.40
             6.270E-05 7.613E-02 1.426E+00   0.184  -0.147     80769
 358.1    =   CS    1 steel alone
          1 1.5967E-01 6.075E-02 7.088E-02   0.000   0.000    210000   12.53
             6.270E-05 8.155E-02 3.986E-03   0.907   0.907     80769
 358.2    =   CS   10 prefab. slab C1
          1 1.5967E-01 6.075E-02 7.088E-02   0.000   0.000    210000   12.53
             6.270E-05 8.155E-02 3.986E-03   0.907   0.907     80769
 358.3    =   CS   20 in-situ conc:C2
          1 1.5967E-01 6.075E-02 7.088E-02   0.000   0.000    210000   12.53
             6.270E-05 8.155E-02 3.986E-03   0.907   0.907     80769
 358.4    =   CS   21 reinf active:C2
          1 1.5967E-01 6.075E-02 7.088E-02   0.000   0.000    210000   12.53
             6.270E-05 8.155E-02 3.986E-03   0.907   0.907     80769
 359      =   VFT (351)
          =   Composit with materials:   1  30  31 300
          1 4.9707E-01 3.119E-01 1.293E-01   0.000   0.000    210000   66.18
             6.270E-05 6.153E-02 1.456E+00   0.116  -0.147     80769
 359.1    =   CS    1 steel alone
          1 1.4418E-01 6.075E-02 4.541E-02   0.000   0.000    210000   11.32
             6.270E-05 6.620E-02 3.986E-03   0.758   0.758     80769
 359.2    =   CS   10 prefab. slab C1
          1 1.4418E-01 6.075E-02 4.541E-02   0.000   0.000    210000   11.32
             6.270E-05 6.620E-02 3.986E-03   0.758   0.758     80769
 359.3    =   CS   20 in-situ conc:C2
          1 1.4418E-01 6.075E-02 4.541E-02   0.000   0.000    210000   11.32
             6.270E-05 6.620E-02 3.986E-03   0.758   0.758     80769
 359.4    =   CS   21 reinf active:C2
          1 1.4418E-01 6.075E-02 4.541E-02   0.000   0.000    210000   11.32
             6.270E-05 6.620E-02 3.986E-03   0.758   0.758     80769
 360      =   VFT (353)
          =   Composit with materials:   1  25 210  31 300
          1 1.6617E-01 3.280E-02 4.335E-02   0.000   0.000    210000   65.26
             6.270E-05 2.694E-02 1.202E-01   0.443  -0.125     80769
 360.1    =   CS    1 steel alone
          1 1.2870E-01 6.075E-02 2.634E-02   0.000   0.000    210000   10.10
             6.270E-05 5.070E-02 3.986E-03   0.609   0.609     80769
 360.2    =   CS   10 prefab. slab C1
          1 1.2870E-01 6.075E-02 2.634E-02   0.000   0.000    210000   10.10
             6.270E-05 5.070E-02 3.986E-03   0.609   0.609     80769
 360.3    =   CS   20 in-situ conc:C2
          1 1.2870E-01 6.075E-02 2.634E-02   0.000   0.000    210000   10.10
             6.270E-05 5.070E-02 3.986E-03   0.609   0.609     80769
```

SOFiSTiK AG - www.sofistik.de

Composite bridge 38+50+38, b=14.25m, 2x2HL1100R HISTAR460 , slab 0.30m C30/37

Cross-sections static properties

```
 No.    Mat      A[m2] Ay/Az/Ayz Iy/Iz/Iyz   ys/zs  y/z-sc   modules     gam
        NoR     It[m4]      [m2]      [m4]     [m]     [m]     [MPa]  [kN/m]
 360.4    =   CS   21 reinf active:C2
          1 1.2935E-01 6.075E-02 2.652E-02   0.000   0.000    210000   10.40
             6.270E-05 5.075E-02 3.986E-03   0.612   0.609     80769
 361      =   VFT (353)
          =   Composit with materials:   1  25 210  31 300
          1 1.6617E-01 3.280E-02 4.335E-02   0.000   0.000    210000   65.26
             6.270E-05 2.694E-02 1.202E-01   0.443  -0.125     80769
 361.1    =   CS    1 steel alone
          1 1.2870E-01 6.075E-02 2.634E-02   0.000   0.000    210000   10.10
             6.270E-05 5.070E-02 3.986E-03   0.609   0.609     80769
 361.2    =   CS   10 prefab. slab C1
          1 1.2870E-01 6.075E-02 2.634E-02   0.000   0.000    210000   10.10
             6.270E-05 5.070E-02 3.986E-03   0.609   0.609     80769
 361.3    =   CS   20 in-situ conc:C2
          1 1.2870E-01 6.075E-02 2.634E-02   0.000   0.000    210000   10.10
             6.270E-05 5.070E-02 3.986E-03   0.609   0.609     80769
 361.4    =   CS   21 reinf active:C2
          1 1.2935E-01 6.075E-02 2.652E-02   0.000   0.000    210000   10.40
             6.270E-05 5.075E-02 3.986E-03   0.612   0.609     80769
 362      =   VFT (353)
          =   Composit with materials:   1  25 210  31 300
          1 2.8372E-01 3.610E-02 2.931E-01   0.000   0.000    210000   91.18
             6.270E-05 8.592E-02 1.681E-01   1.218  -0.116     80769
 362.1    =   CS    1 steel alone
          1 2.0056E-01 6.075E-02 1.740E-01   0.000   0.000    210000   15.74
             6.270E-05 1.213E-01 3.986E-03   1.300   1.300     80769
 362.2    =   CS   10 prefab. slab C1
          1 2.0056E-01 6.075E-02 1.740E-01   0.000   0.000    210000   15.74
             6.270E-05 1.213E-01 3.986E-03   1.300   1.300     80769
 362.3    =   CS   20 in-situ conc:C2
          1 2.0056E-01 6.075E-02 1.740E-01   0.000   0.000    210000   15.74
             6.270E-05 1.213E-01 3.986E-03   1.300   1.300     80769
 362.4    =   CS   21 reinf active:C2
          1 2.4242E-01 6.075E-02 2.023E-01   0.000   0.000    210000   36.32
             6.270E-05 1.118E-01 3.986E-03   1.452   1.300     80769
 363      =   VFT (353)
          =   Composit with materials:   1  25 210  31 300
          1 2.8157E-01 3.611E-02 2.876E-01   0.000   0.000    210000   90.53
             6.270E-05 8.509E-02 1.684E-01   1.206  -0.116     80769
 363.1    =   CS    1 steel alone
          1 1.9955E-01 6.075E-02 1.707E-01   0.000   0.000    210000   15.66
             6.270E-05 1.203E-01 3.986E-03   1.290   1.290     80769
 363.2    =   CS   10 prefab. slab C1
          1 1.9955E-01 6.075E-02 1.707E-01   0.000   0.000    210000   15.66
             6.270E-05 1.203E-01 3.986E-03   1.290   1.290     80769
 363.3    =   CS   20 in-situ conc:C2
          1 1.9955E-01 6.075E-02 1.707E-01   0.000   0.000    210000   15.66
             6.270E-05 1.203E-01 3.986E-03   1.290   1.290     80769
 363.4    =   CS   21 reinf active:C2
          1 2.4025E-01 6.075E-02 1.983E-01   0.000   0.000    210000   35.67
             6.270E-05 1.112E-01 3.986E-03   1.439   1.290     80769
 364      =   VFT (353)
          =   Composit with materials:   1  25 210  31 300
          1 2.7972E-01 3.613E-02 2.828E-01   0.000   0.000    210000   89.97
             6.270E-05 8.438E-02 1.686E-01   1.195  -0.116     80769
 364.1    =   CS    1 steel alone
          1 1.9867E-01 6.075E-02 1.679E-01   0.000   0.000    210000   15.60
             6.270E-05 1.195E-01 3.986E-03   1.282   1.282     80769
 364.2    =   CS   10 prefab. slab C1
          1 1.9867E-01 6.075E-02 1.679E-01   0.000   0.000    210000   15.60
             6.270E-05 1.195E-01 3.986E-03   1.282   1.282     80769
 364.3    =   CS   20 in-situ conc:C2
          1 1.9867E-01 6.075E-02 1.679E-01   0.000   0.000    210000   15.60
             6.270E-05 1.195E-01 3.986E-03   1.282   1.282     80769
```

SOFiSTiK AG - www.sofistik.de

Composite bridge 38+50+38, b=14.25m, 2x2HL1100R HISTAR460 , slab 0.30m C30/37

Cross-sections static properties

```
 No.    Mat      A[m2] Ay/Az/Ayz Iy/Iz/Iyz   ys/zs  y/z-sc   modules     gam
        NoR     It[m4]      [m2]      [m4]     [m]     [m]     [MPa]  [kN/m]
 364.4    =   CS   21 reinf active:C2
          1 2.3838E-01 6.075E-02 1.949E-01   0.000   0.000    210000   35.11
             6.270E-05 1.106E-01 3.986E-03   1.428   1.282     80769
 365      =   VFT (353)
          =   Composit with materials:   1  25 210  31 300
          1 2.7670E-01 3.615E-02 2.752E-01   0.000   0.000    210000   89.05
             6.270E-05 8.321E-02 1.690E-01   1.177  -0.117     80769
 365.1    =   CS    1 steel alone
          1 1.9725E-01 6.075E-02 1.635E-01   0.000   0.000    210000   15.48
             6.270E-05 1.181E-01 3.986E-03   1.268   1.268     80769
 365.2    =   CS   10 prefab. slab C1
          1 1.9725E-01 6.075E-02 1.635E-01   0.000   0.000    210000   15.48
             6.270E-05 1.181E-01 3.986E-03   1.268   1.268     80769
 365.3    =   CS   20 in-situ conc:C2
          1 1.9725E-01 6.075E-02 1.635E-01   0.000   0.000    210000   15.48
             6.270E-05 1.181E-01 3.986E-03   1.268   1.268     80769
 365.4    =   CS   21 reinf active:C2
          1 2.3532E-01 6.075E-02 1.893E-01   0.000   0.000    210000   34.19
             6.270E-05 1.098E-01 3.986E-03   1.410   1.268     80769
 366      =   VFT (353)
          =   Composit with materials:   1  25 210  31 300
          1 2.7368E-01 3.618E-02 2.677E-01   0.000   0.000    210000   88.14
             6.270E-05 8.204E-02 1.694E-01   1.159  -0.117     80769
 366.1    =   CS    1 steel alone
          1 1.9583E-01 6.075E-02 1.591E-01   0.000   0.000    210000   15.37
             6.270E-05 1.167E-01 3.986E-03   1.255   1.255     80769
 366.2    =   CS   10 prefab. slab C1
          1 1.9583E-01 6.075E-02 1.591E-01   0.000   0.000    210000   15.37
             6.270E-05 1.167E-01 3.986E-03   1.255   1.255     80769
 366.3    =   CS   20 in-situ conc:C2
          1 1.9583E-01 6.075E-02 1.591E-01   0.000   0.000    210000   15.37
             6.270E-05 1.167E-01 3.986E-03   1.255   1.255     80769
 366.4    =   CS   21 reinf active:C2
          1 2.3227E-01 6.075E-02 1.839E-01   0.000   0.000    210000   33.28
             6.270E-05 1.089E-01 3.986E-03   1.392   1.255     80769
 367      =   VFT (353)
          =   Composit with materials:   1  25 210  31 300
          1 2.7075E-01 3.620E-02 2.605E-01   0.000   0.000    210000   87.25
             6.270E-05 8.089E-02 1.698E-01   1.141  -0.117     80769
 367.1    =   CS    1 steel alone
          1 1.9445E-01 6.075E-02 1.549E-01   0.000   0.000    210000   15.26
             6.270E-05 1.154E-01 3.986E-03   1.241   1.241     80769
 367.2    =   CS   10 prefab. slab C1
          1 1.9445E-01 6.075E-02 1.549E-01   0.000   0.000    210000   15.26
             6.270E-05 1.154E-01 3.986E-03   1.241   1.241     80769
 367.3    =   CS   20 in-situ conc:C2
          1 1.9445E-01 6.075E-02 1.549E-01   0.000   0.000    210000   15.26
             6.270E-05 1.154E-01 3.986E-03   1.241   1.241     80769
 367.4    =   CS   21 reinf active:C2
          1 2.2931E-01 6.075E-02 1.787E-01   0.000   0.000    210000   32.39
             6.270E-05 1.080E-01 3.986E-03   1.375   1.241     80769
 368      =   VFT (353)
          =   Composit with materials:   1  25 210  31 300
          1 2.6452E-01 3.626E-02 2.454E-01   0.000   0.000    210000   85.37
             6.270E-05 7.844E-02 1.706E-01   1.104  -0.118     80769
 368.1    =   CS    1 steel alone
          1 1.9152E-01 6.075E-02 1.463E-01   0.000   0.000    210000   15.03
             6.270E-05 1.126E-01 3.986E-03   1.213   1.213     80769
 368.2    =   CS   10 prefab. slab C1
          1 1.9152E-01 6.075E-02 1.463E-01   0.000   0.000    210000   15.03
             6.270E-05 1.126E-01 3.986E-03   1.213   1.213     80769
 368.3    =   CS   20 in-situ conc:C2
          1 1.9152E-01 6.075E-02 1.463E-01   0.000   0.000    210000   15.03
             6.270E-05 1.126E-01 3.986E-03   1.213   1.213     80769
```

SOFiSTiK AG - www.sofistik.de

Composite bridge 38+50+38, b=14.25m, 2x2HL1100R HISTAR460 , slab 0.30m C30/37

Cross-sections static properties

```
 No.    Mat      A[m2] Ay/Az/Ayz Iy/Iz/Iyz   ys/zs  y/z-sc   modules     gam
        NoR     It[m4]      [m2]      [m4]     [m]     [m]     [MPa]  [kN/m]
 368.4    =   CS   21 reinf active:C2
          1 2.2301E-01 6.075E-02 1.678E-01   0.000   0.000    210000   30.50
             6.270E-05 1.063E-01 3.986E-03   1.337   1.213     80769
 369      =   VFT (353)
          =   Composit with materials:   1  25 210  31 300
          1 2.5643E-01 3.632E-02 2.264E-01   0.000   0.000    210000   82.92
             6.270E-05 7.519E-02 1.717E-01   1.054  -0.119     80769
 369.1    =   CS    1 steel alone
          1 1.8771E-01 6.075E-02 1.355E-01   0.000   0.000    210000   14.73
             6.270E-05 1.089E-01 3.986E-03   1.176   1.176     80769
 369.2    =   CS   10 prefab. slab C1
          1 1.8771E-01 6.075E-02 1.355E-01   0.000   0.000    210000   14.73
             6.270E-05 1.089E-01 3.986E-03   1.176   1.176     80769
 369.3    =   CS   20 in-situ conc:C2
          1 1.8771E-01 6.075E-02 1.355E-01   0.000   0.000    210000   14.73
             6.270E-05 1.089E-01 3.986E-03   1.176   1.176     80769
 369.4    =   CS   21 reinf active:C2
          1 2.1483E-01 6.075E-02 1.542E-01   0.000   0.000    210000   28.05
             6.270E-05 1.039E-01 3.986E-03   1.287   1.176     80769
 370      =   VFT (353)
          =   Composit with materials:   1  25 210  31 300
          1 2.4963E-01 3.638E-02 2.109E-01   0.000   0.000    210000   80.86
             6.270E-05 7.239E-02 1.726E-01   1.012  -0.120     80769
 370.1    =   CS    1 steel alone
          1 1.8450E-01 6.075E-02 1.268E-01   0.000   0.000    210000   14.48
             6.270E-05 1.058E-01 3.986E-03   1.146   1.146     80769
 370.2    =   CS   10 prefab. slab C1
          1 1.8450E-01 6.075E-02 1.268E-01   0.000   0.000    210000   14.48
             6.270E-05 1.058E-01 3.986E-03   1.146   1.146     80769
 370.3    =   CS   20 in-situ conc:C2
          1 1.8450E-01 6.075E-02 1.268E-01   0.000   0.000    210000   14.48
             6.270E-05 1.058E-01 3.986E-03   1.146   1.146     80769
 370.4    =   CS   21 reinf active:C2
          1 2.0795E-01 6.075E-02 1.431E-01   0.000   0.000    210000   26.00
             6.270E-05 1.019E-01 3.986E-03   1.245   1.146     80769
 371      =   VFT (353)
          =   Composit with materials:   1  25 210  31 300
          1 2.3938E-01 3.647E-02 1.882E-01   0.000   0.000    210000   77.75
             6.270E-05 6.803E-02 1.740E-01   0.947  -0.121     80769
 371.1    =   CS    1 steel alone
          1 1.7968E-01 6.075E-02 1.144E-01   0.000   0.000    210000   14.10
             6.270E-05 1.011E-01 3.986E-03   1.099   1.099     80769
 371.2    =   CS   10 prefab. slab C1
          1 1.7968E-01 6.075E-02 1.144E-01   0.000   0.000    210000   14.10
             6.270E-05 1.011E-01 3.986E-03   1.099   1.099     80769
 371.3    =   CS   20 in-situ conc:C2
          1 1.7968E-01 6.075E-02 1.144E-01   0.000   0.000    210000   14.10
             6.270E-05 1.011E-01 3.986E-03   1.099   1.099     80769
 371.4    =   CS   21 reinf active:C2
          1 1.9759E-01 6.075E-02 1.270E-01   0.000   0.000    210000   22.89
             6.270E-05 9.881E-02 3.986E-03   1.179   1.099     80769
 372      =   VFT (353)
          =   Composit with materials:   1  25 210  31 300
          1 2.2913E-01 3.655E-02 1.663E-01   0.000   0.000    210000   74.65
             6.270E-05 6.343E-02 1.754E-01   0.880  -0.123     80769
 372.1    =   CS    1 steel alone
          1 1.7485E-01 6.075E-02 1.027E-01   0.000   0.000    210000   13.73
             6.270E-05 9.643E-02 3.986E-03   1.053   1.053     80769
 372.2    =   CS   10 prefab. slab C1
          1 1.7485E-01 6.075E-02 1.027E-01   0.000   0.000    210000   13.73
             6.270E-05 9.643E-02 3.986E-03   1.053   1.053     80769
 372.3    =   CS   20 in-situ conc:C2
          1 1.7485E-01 6.075E-02 1.027E-01   0.000   0.000    210000   13.73
             6.270E-05 9.643E-02 3.986E-03   1.053   1.053     80769
```

SOFiSTiK AG - www.sofistik.de

Composite bridge 38+50+38, b=14.25m, 2x2HL1100R HISTAR460 , slab 0.30m C30/37

Cross-sections static properties

```
 No.    Mat      A[m2] Ay/Az/Ayz Iy/Iz/Iyz   ys/zs  y/z-sc   modules     gam
        NoR     It[m4]      [m2]      [m4]     [m]     [m]     [MPa]  [kN/m]
 372.4    =   CS   21 reinf active:C2
          1 1.8722E-01 6.075E-02 1.116E-01   0.000   0.000    210000   19.79
             6.270E-05 9.543E-02 3.986E-03   1.111   1.053     80769
 373      =   VFT (353)
          =   Composit with materials:   1  25 210  31 300
          1 2.2913E-01 3.655E-02 1.663E-01   0.000   0.000    210000   74.65
             6.270E-05 6.343E-02 1.754E-01   0.880  -0.123     80769
 373.1    =   CS    1 steel alone
          1 1.7485E-01 6.075E-02 1.027E-01   0.000   0.000    210000   13.73
             6.270E-05 9.643E-02 3.986E-03   1.053   1.053     80769
 373.2    =   CS   10 prefab. slab C1
          1 1.7485E-01 6.075E-02 1.027E-01   0.000   0.000    210000   13.73
             6.270E-05 9.643E-02 3.986E-03   1.053   1.053     80769
 373.3    =   CS   20 in-situ conc:C2
          1 1.7485E-01 6.075E-02 1.027E-01   0.000   0.000    210000   13.73
             6.270E-05 9.643E-02 3.986E-03   1.053   1.053     80769
 373.4    =   CS   21 reinf active:C2
          1 1.8722E-01 6.075E-02 1.116E-01   0.000   0.000    210000   19.79
             6.270E-05 9.543E-02 3.986E-03   1.111   1.053     80769
 374      =   VFT (353)
          =   Composit with materials:   1  25 210  31 300
          1 2.1318E-01 3.669E-02 1.336E-01   0.000   0.000    210000   69.85
             6.270E-05 5.555E-02 1.776E-01   0.773  -0.125     80769
 374.1    =   CS    1 steel alone
          1 1.6726E-01 6.075E-02 8.590E-02   0.000   0.000    210000   13.13
             6.270E-05 8.901E-02 3.986E-03   0.980   0.980     80769
 374.2    =   CS   10 prefab. slab C1
          1 1.6726E-01 6.075E-02 8.590E-02   0.000   0.000    210000   13.13
             6.270E-05 8.901E-02 3.986E-03   0.980   0.980     80769
 374.3    =   CS   20 in-situ conc:C2
          1 1.6726E-01 6.075E-02 8.590E-02   0.000   0.000    210000   13.13
             6.270E-05 8.901E-02 3.986E-03   0.980   0.980     80769
 374.4    =   CS   21 reinf active:C2
          1 1.7110E-01 6.075E-02 8.878E-02   0.000   0.000    210000   14.99
             6.270E-05 8.912E-02 3.986E-03   0.999   0.980     80769
 375      =   VFT (353)
          =   Composit with materials:   1  25 210  31 300
          1 2.0515E-01 3.682E-02 1.118E-01   0.000   0.000    210000   68.95
             6.270E-05 4.838E-02 1.798E-01   0.702  -0.127     80769
 375.1    =   CS    1 steel alone
          1 1.5967E-01 6.075E-02 7.088E-02   0.000   0.000    210000   12.53
             6.270E-05 8.155E-02 3.986E-03   0.907   0.907     80769
 375.2    =   CS   10 prefab. slab C1
          1 1.5967E-01 6.075E-02 7.088E-02   0.000   0.000    210000   12.53
             6.270E-05 8.155E-02 3.986E-03   0.907   0.907     80769
 375.3    =   CS   20 in-situ conc:C2
          1 1.5967E-01 6.075E-02 7.088E-02   0.000   0.000    210000   12.53
             6.270E-05 8.155E-02 3.986E-03   0.907   0.907     80769
 375.4    =   CS   21 reinf active:C2
          1 1.6289E-01 6.075E-02 7.294E-02   0.000   0.000    210000   14.09
             6.270E-05 8.167E-02 3.986E-03   0.923   0.907     80769
 376      =   VFT (353)
          =   Composit with materials:   1  25 210  31 300
          1 2.8372E-01 3.610E-02 2.931E-01   0.000   0.000    210000   91.18
             6.270E-05 8.592E-02 1.681E-01   1.218  -0.116     80769
 376.1    =   CS    1 steel alone
          1 2.0056E-01 6.075E-02 1.740E-01   0.000   0.000    210000   15.74
             6.270E-05 1.213E-01 3.986E-03   1.300   1.300     80769
 376.2    =   CS   10 prefab. slab C1
          1 2.0056E-01 6.075E-02 1.740E-01   0.000   0.000    210000   15.74
             6.270E-05 1.213E-01 3.986E-03   1.300   1.300     80769
 376.3    =   CS   20 in-situ conc:C2
          1 2.0056E-01 6.075E-02 1.740E-01   0.000   0.000    210000   15.74
             6.270E-05 1.213E-01 3.986E-03   1.300   1.300     80769
```

SOFiSTiK AG - www.sofistik.de

Composite bridge 38+50+38, b=14.25m, 2x2HL1100R HISTAR460 , slab 0.30m C30/37

Cross-sections static properties

```
 No.    Mat      A[m2] Ay/Az/Ayz Iy/Iz/Iyz   ys/zs  y/z-sc   modules     gam
        NoR     It[m4]      [m2]      [m4]     [m]     [m]     [MPa]  [kN/m]
 376.4    =   CS   21 reinf active:C2
          1 2.4242E-01 6.075E-02 2.023E-01   0.000   0.000    210000   36.32
             6.270E-05 1.118E-01 3.986E-03   1.452   1.300     80769
 377      =   VFT (353)
          =   Composit with materials:   1  25 210  31 300
          1 2.7073E-01 3.620E-02 2.604E-01   0.000   0.000    210000   87.25
             6.270E-05 8.088E-02 1.698E-01   1.141  -0.117     80769
 377.1    =   CS    1 steel alone
          1 1.9444E-01 6.075E-02 1.549E-01   0.000   0.000    210000   15.26
             6.270E-05 1.154E-01 3.986E-03   1.241   1.241     80769
 377.2    =   CS   10 prefab. slab C1
          1 1.9444E-01 6.075E-02 1.549E-01   0.000   0.000    210000   15.26
             6.270E-05 1.154E-01 3.986E-03   1.241   1.241     80769
 377.3    =   CS   20 in-situ conc:C2
          1 1.9444E-01 6.075E-02 1.549E-01   0.000   0.000    210000   15.26
             6.270E-05 1.154E-01 3.986E-03   1.241   1.241     80769
 377.4    =   CS   21 reinf active:C2
          1 2.2929E-01 6.075E-02 1.786E-01   0.000   0.000    210000   32.38
             6.270E-05 1.080E-01 3.986E-03   1.375   1.241     80769
 378      =   VFT (353)
          =   Composit with materials:   1  25 210  31 300
          1 2.5247E-01 3.636E-02 2.173E-01   0.000   0.000    210000   81.72
             6.270E-05 7.357E-02 1.722E-01   1.029  -0.120     80769
 378.1    =   CS    1 steel alone
          1 1.8584E-01 6.075E-02 1.304E-01   0.000   0.000    210000   14.59
             6.270E-05 1.071E-01 3.986E-03   1.158   1.158     80769
 378.2    =   CS   10 prefab. slab C1
          1 1.8584E-01 6.075E-02 1.304E-01   0.000   0.000    210000   14.59
             6.270E-05 1.071E-01 3.986E-03   1.158   1.158     80769
 378.3    =   CS   20 in-situ conc:C2
          1 1.8584E-01 6.075E-02 1.304E-01   0.000   0.000    210000   14.59
             6.270E-05 1.071E-01 3.986E-03   1.158   1.158     80769
 378.4    =   CS   21 reinf active:C2
          1 2.1083E-01 6.075E-02 1.477E-01   0.000   0.000    210000   26.86
             6.270E-05 1.028E-01 3.986E-03   1.262   1.158     80769
 379      =   VFT (353)
          =   Composit with materials:   1  25 210  31 300
          1 2.2949E-01 3.655E-02 1.671E-01   0.000   0.000    210000   74.76
             6.270E-05 6.360E-02 1.754E-01   0.883  -0.123     80769
 379.1    =   CS    1 steel alone
          1 1.7502E-01 6.075E-02 1.031E-01   0.000   0.000    210000   13.74
             6.270E-05 9.660E-02 3.986E-03   1.054   1.054     80769
 379.2    =   CS   10 prefab. slab C1
          1 1.7502E-01 6.075E-02 1.031E-01   0.000   0.000    210000   13.74
             6.270E-05 9.660E-02 3.986E-03   1.054   1.054     80769
 379.3    =   CS   20 in-situ conc:C2
          1 1.7502E-01 6.075E-02 1.031E-01   0.000   0.000    210000   13.74
             6.270E-05 9.660E-02 3.986E-03   1.054   1.054     80769
 379.4    =   CS   21 reinf active:C2
          1 1.8759E-01 6.075E-02 1.122E-01   0.000   0.000    210000   19.90
             6.270E-05 9.556E-02 3.986E-03   1.113   1.054     80769
 380      =   VFT (353)
          =   Composit with materials:   1  25 210  31 300
          1 2.0515E-01 3.682E-02 1.118E-01   0.000   0.000    210000   68.95
             6.270E-05 4.838E-02 1.798E-01   0.702  -0.127     80769
 380.1    =   CS    1 steel alone
          1 1.5967E-01 6.075E-02 7.088E-02   0.000   0.000    210000   12.53
             6.270E-05 8.155E-02 3.986E-03   0.907   0.907     80769
 380.2    =   CS   10 prefab. slab C1
          1 1.5967E-01 6.075E-02 7.088E-02   0.000   0.000    210000   12.53
             6.270E-05 8.155E-02 3.986E-03   0.907   0.907     80769
 380.3    =   CS   20 in-situ conc:C2
          1 1.5967E-01 6.075E-02 7.088E-02   0.000   0.000    210000   12.53
             6.270E-05 8.155E-02 3.986E-03   0.907   0.907     80769
```

SOFiSTiK AG - www.sofistik.de

Composite bridge 38+50+38, b=14.25m, 2x2HL1100R HISTAR460 , slab 0.30m C30/37

Cross-sections static properties

```
 No.    Mat      A[m2] Ay/Az/Ayz Iy/Iz/Iyz   ys/zs  y/z-sc   modules     gam
        NoR     It[m4]      [m2]      [m4]     [m]     [m]     [MPa]  [kN/m]
 380.4    =   CS   21 reinf active:C2
          1 1.6289E-01 6.075E-02 7.294E-02   0.000   0.000    210000   14.09
             6.270E-05 8.167E-02 3.986E-03   0.923   0.907     80769
 451      =   VFT
          =   Composit with materials:   1  30  31 300
          1 1.6422E-01 1.075E-01 1.947E-02   0.000   0.000    210000   63.26
             6.270E-05 4.627E-02 8.980E-03   0.218   0.113     80769
 451.1    =   CS    1 steel alone
          1 1.0696E-01 6.075E-02 9.037E-03   0.000   0.000    210000    8.40
             6.270E-05 2.882E-02 3.986E-03   0.400   0.400     80769
 451.2    =   CS   10 prefab. slab C1
          1 1.0696E-01 6.075E-02 9.037E-03   0.000   0.000    210000    8.40
             6.270E-05 2.882E-02 3.986E-03   0.400   0.400     80769
 451.3    =   CS   20 in-situ conc:C2
          1 1.0696E-01 6.075E-02 9.037E-03   0.000   0.000    210000    8.40
             6.270E-05 2.882E-02 3.986E-03   0.400   0.400     80769
 451.4    =   CS   21 reinf active:C2
          1 1.0696E-01 6.075E-02 9.037E-03   0.000   0.000    210000    8.40
             6.270E-05 2.882E-02 3.986E-03   0.400   0.400     80769
 452      =   VFT
          =   Composit with materials:   1  30  31 300
          1 1.6422E-01 1.075E-01 1.947E-02   0.000   0.000    210000   63.26
             6.270E-05 4.627E-02 8.980E-03   0.218   0.113     80769
 452.1    =   CS    1 steel alone
          1 1.0696E-01 6.075E-02 9.037E-03   0.000   0.000    210000    8.40
             6.270E-05 2.882E-02 3.986E-03   0.400   0.400     80769
 452.2    =   CS   10 prefab. slab C1
          1 1.0696E-01 6.075E-02 9.037E-03   0.000   0.000    210000    8.40
             6.270E-05 2.882E-02 3.986E-03   0.400   0.400     80769
 452.3    =   CS   20 in-situ conc:C2
          1 1.0696E-01 6.075E-02 9.037E-03   0.000   0.000    210000    8.40
             6.270E-05 2.882E-02 3.986E-03   0.400   0.400     80769
 452.4    =   CS   21 reinf active:C2
          1 1.0696E-01 6.075E-02 9.037E-03   0.000   0.000    210000    8.40
             6.270E-05 2.882E-02 3.986E-03   0.400   0.400     80769
 453      =   VFT
          =   Composit with materials:   1  25 210  31 300
          1 1.1360E-01 6.454E-02 1.086E-02   0.000   0.000    210000   63.55
             6.270E-05 3.273E-02 4.484E-03   0.373   0.339     80769
 453.1    =   CS    1 steel alone
          1 1.0696E-01 6.075E-02 9.037E-03   0.000   0.000    210000    8.40
             6.270E-05 2.882E-02 3.986E-03   0.400   0.400     80769
 453.2    =   CS   10 prefab. slab C1
          1 1.0696E-01 6.075E-02 9.037E-03   0.000   0.000    210000    8.40
             6.270E-05 2.882E-02 3.986E-03   0.400   0.400     80769
 453.3    =   CS   20 in-situ conc:C2
          1 1.0696E-01 6.075E-02 9.037E-03   0.000   0.000    210000    8.40
             6.270E-05 2.882E-02 3.986E-03   0.400   0.400     80769
 453.4    =   CS   21 reinf active:C2
          1 1.0762E-01 6.075E-02 9.103E-03   0.000   0.000    210000    8.69
             6.270E-05 2.887E-02 3.986E-03   0.402   0.400     80769
 551      =   VFT
          =   Composit with materials:   1  30  31 300
          1 1.6422E-01 1.075E-01 1.947E-02   0.000   0.000    210000   63.26
             6.270E-05 4.627E-02 8.980E-03   0.218   0.113     80769
 551.1    =   CS    1 steel alone
          1 1.0696E-01 6.075E-02 9.037E-03   0.000   0.000    210000    8.40
             6.270E-05 2.882E-02 3.986E-03   0.400   0.400     80769
 551.2    =   CS   10 prefab. slab C1
          1 1.0696E-01 6.075E-02 9.037E-03   0.000   0.000    210000    8.40
             6.270E-05 2.882E-02 3.986E-03   0.400   0.400     80769
 551.3    =   CS   20 in-situ conc:C2
          1 1.0696E-01 6.075E-02 9.037E-03   0.000   0.000    210000    8.40
             6.270E-05 2.882E-02 3.986E-03   0.400   0.400     80769
```

SOFiSTiK AG - www.sofistik.de

Composite bridge 38+50+38, b=14.25m, 2x2HL1100R HISTAR460 , slab 0.30m C30/37

Cross-sections static properties

```
 No.    Mat      A[m2] Ay/Az/Ayz Iy/Iz/Iyz   ys/zs  y/z-sc   modules     gam
        NoR     It[m4]      [m2]      [m4]     [m]     [m]     [MPa]  [kN/m]
 551.4    =   CS   21 reinf active:C2
          1 1.0696E-01 6.075E-02 9.037E-03   0.000   0.000    210000    8.40
             6.270E-05 2.882E-02 3.986E-03   0.400   0.400     80769
 552      =   VFT
          =   Composit with materials:   1  30  31 300
          1 1.6422E-01 1.075E-01 1.947E-02   0.000   0.000    210000   63.26
             6.270E-05 4.627E-02 8.980E-03   0.218   0.113     80769
 552.1    =   CS    1 steel alone
          1 1.0696E-01 6.075E-02 9.037E-03   0.000   0.000    210000    8.40
             6.270E-05 2.882E-02 3.986E-03   0.400   0.400     80769
 552.2    =   CS   10 prefab. slab C1
          1 1.0696E-01 6.075E-02 9.037E-03   0.000   0.000    210000    8.40
             6.270E-05 2.882E-02 3.986E-03   0.400   0.400     80769
 552.3    =   CS   20 in-situ conc:C2
          1 1.0696E-01 6.075E-02 9.037E-03   0.000   0.000    210000    8.40
             6.270E-05 2.882E-02 3.986E-03   0.400   0.400     80769
 552.4    =   CS   21 reinf active:C2
          1 1.0696E-01 6.075E-02 9.037E-03   0.000   0.000    210000    8.40
             6.270E-05 2.882E-02 3.986E-03   0.400   0.400     80769
 553      =   VFT
          =   Composit with materials:   1  25 210  31 300
          1 1.1360E-01 6.454E-02 1.086E-02   0.000   0.000    210000   63.55
             6.270E-05 3.273E-02 4.484E-03   0.373   0.339     80769
 553.1    =   CS    1 steel alone
          1 1.0696E-01 6.075E-02 9.037E-03   0.000   0.000    210000    8.40
             6.270E-05 2.882E-02 3.986E-03   0.400   0.400     80769
 553.2    =   CS   10 prefab. slab C1
          1 1.0696E-01 6.075E-02 9.037E-03   0.000   0.000    210000    8.40
             6.270E-05 2.882E-02 3.986E-03   0.400   0.400     80769
 553.3    =   CS   20 in-situ conc:C2
          1 1.0696E-01 6.075E-02 9.037E-03   0.000   0.000    210000    8.40
             6.270E-05 2.882E-02 3.986E-03   0.400   0.400     80769
 553.4    =   CS   21 reinf active:C2
          1 1.0762E-01 6.075E-02 9.103E-03   0.000   0.000    210000    8.69
             6.270E-05 2.887E-02 3.986E-03   0.402   0.400     80769
 651      =   VFT
          =   Composit with materials:   1  30  31 300
          1 1.6422E-01 1.075E-01 1.947E-02   0.000   0.000    210000   63.26
             6.270E-05 4.627E-02 8.980E-03   0.218   0.113     80769
 651.1    =   CS    1 steel alone
          1 1.0696E-01 6.075E-02 9.037E-03   0.000   0.000    210000    8.40
             6.270E-05 2.882E-02 3.986E-03   0.400   0.400     80769
 651.2    =   CS   10 prefab. slab C1
          1 1.0696E-01 6.075E-02 9.037E-03   0.000   0.000    210000    8.40
             6.270E-05 2.882E-02 3.986E-03   0.400   0.400     80769
 651.3    =   CS   20 in-situ conc:C2
          1 1.0696E-01 6.075E-02 9.037E-03   0.000   0.000    210000    8.40
             6.270E-05 2.882E-02 3.986E-03   0.400   0.400     80769
 651.4    =   CS   21 reinf active:C2
          1 1.0696E-01 6.075E-02 9.037E-03   0.000   0.000    210000    8.40
             6.270E-05 2.882E-02 3.986E-03   0.400   0.400     80769
 652      =   VFT
          =   Composit with materials:   1  30  31 300
          1 1.6422E-01 1.075E-01 1.947E-02   0.000   0.000    210000   63.26
             6.270E-05 4.627E-02 8.980E-03   0.218   0.113     80769
 652.1    =   CS    1 steel alone
          1 1.0696E-01 6.075E-02 9.037E-03   0.000   0.000    210000    8.40
             6.270E-05 2.882E-02 3.986E-03   0.400   0.400     80769
 652.2    =   CS   10 prefab. slab C1
          1 1.0696E-01 6.075E-02 9.037E-03   0.000   0.000    210000    8.40
             6.270E-05 2.882E-02 3.986E-03   0.400   0.400     80769
 652.3    =   CS   20 in-situ conc:C2
          1 1.0696E-01 6.075E-02 9.037E-03   0.000   0.000    210000    8.40
             6.270E-05 2.882E-02 3.986E-03   0.400   0.400     80769
```

SOFiSTiK AG - www.sofistik.de

Composite bridge 38+50+38, b=14.25m, 2x2HL1100R HISTAR460 , slab 0.30m C30/37

Cross-sections static properties

```
 No.    Mat      A[m2] Ay/Az/Ayz Iy/Iz/Iyz   ys/zs  y/z-sc   modules     gam
        NoR     It[m4]      [m2]      [m4]     [m]     [m]     [MPa]  [kN/m]
 652.4    =   CS   21 reinf active:C2
          1 1.0696E-01 6.075E-02 9.037E-03   0.000   0.000    210000    8.40
             6.270E-05 2.882E-02 3.986E-03   0.400   0.400     80769
 653      =   VFT
          =   Composit with materials:   1  25 210  31 300
          1 1.1360E-01 6.454E-02 1.086E-02   0.000   0.000    210000   63.55
             6.270E-05 3.273E-02 4.484E-03   0.373   0.339     80769
 653.1    =   CS    1 steel alone
          1 1.0696E-01 6.075E-02 9.037E-03   0.000   0.000    210000    8.40
             6.270E-05 2.882E-02 3.986E-03   0.400   0.400     80769
 653.2    =   CS   10 prefab. slab C1
          1 1.0696E-01 6.075E-02 9.037E-03   0.000   0.000    210000    8.40
             6.270E-05 2.882E-02 3.986E-03   0.400   0.400     80769
 653.3    =   CS   20 in-situ conc:C2
          1 1.0696E-01 6.075E-02 9.037E-03   0.000   0.000    210000    8.40
             6.270E-05 2.882E-02 3.986E-03   0.400   0.400     80769
 653.4    =   CS   21 reinf active:C2
          1 1.0762E-01 6.075E-02 9.103E-03   0.000   0.000    210000    8.69
             6.270E-05 2.887E-02 3.986E-03   0.402   0.400     80769
 751      =   VFT
          =   Composit with materials:   1  30  31 300
          1 1.6422E-01 1.075E-01 1.947E-02   0.000   0.000    210000   63.26
             6.270E-05 4.627E-02 8.980E-03   0.218   0.113     80769
 751.1    =   CS    1 steel alone
          1 1.0696E-01 6.075E-02 9.037E-03   0.000   0.000    210000    8.40
             6.270E-05 2.882E-02 3.986E-03   0.400   0.400     80769
 751.2    =   CS   10 prefab. slab C1
          1 1.0696E-01 6.075E-02 9.037E-03   0.000   0.000    210000    8.40
             6.270E-05 2.882E-02 3.986E-03   0.400   0.400     80769
 751.3    =   CS   20 in-situ conc:C2
          1 1.0696E-01 6.075E-02 9.037E-03   0.000   0.000    210000    8.40
             6.270E-05 2.882E-02 3.986E-03   0.400   0.400     80769
 751.4    =   CS   21 reinf active:C2
          1 1.0696E-01 6.075E-02 9.037E-03   0.000   0.000    210000    8.40
             6.270E-05 2.882E-02 3.986E-03   0.400   0.400     80769
 752      =   VFT
          =   Composit with materials:   1  30  31 300
          1 1.6422E-01 1.075E-01 1.947E-02   0.000   0.000    210000   63.26
             6.270E-05 4.627E-02 8.980E-03   0.218   0.113     80769
 752.1    =   CS    1 steel alone
          1 1.0696E-01 6.075E-02 9.037E-03   0.000   0.000    210000    8.40
             6.270E-05 2.882E-02 3.986E-03   0.400   0.400     80769
 752.2    =   CS   10 prefab. slab C1
          1 1.0696E-01 6.075E-02 9.037E-03   0.000   0.000    210000    8.40
             6.270E-05 2.882E-02 3.986E-03   0.400   0.400     80769
 752.3    =   CS   20 in-situ conc:C2
          1 1.0696E-01 6.075E-02 9.037E-03   0.000   0.000    210000    8.40
             6.270E-05 2.882E-02 3.986E-03   0.400   0.400     80769
 752.4    =   CS   21 reinf active:C2
          1 1.0696E-01 6.075E-02 9.037E-03   0.000   0.000    210000    8.40
             6.270E-05 2.882E-02 3.986E-03   0.400   0.400     80769
 753      =   VFT
          =   Composit with materials:   1  25 210  31 300
          1 1.1360E-01 6.454E-02 1.086E-02   0.000   0.000    210000   63.55
             6.270E-05 3.273E-02 4.484E-03   0.373   0.339     80769
 753.1    =   CS    1 steel alone
          1 1.0696E-01 6.075E-02 9.037E-03   0.000   0.000    210000    8.40
             6.270E-05 2.882E-02 3.986E-03   0.400   0.400     80769
 753.2    =   CS   10 prefab. slab C1
          1 1.0696E-01 6.075E-02 9.037E-03   0.000   0.000    210000    8.40
             6.270E-05 2.882E-02 3.986E-03   0.400   0.400     80769
 753.3    =   CS   20 in-situ conc:C2
          1 1.0696E-01 6.075E-02 9.037E-03   0.000   0.000    210000    8.40
             6.270E-05 2.882E-02 3.986E-03   0.400   0.400     80769
```

SOFiSTiK AG - www.sofistik.de

Composite bridge 38+50+38, b=14.25m, 2x2HL1100R HISTAR460 , slab 0.30m C30/37

Cross-sections static properties

No.	Mat NoR	A[m2] It[m4]	Ay/Az/Ayz [m2]	Iy/Iz/Iyz [m4]	ys/zs [m]	y/z-sc [m]	modules [MPa]	gam [kN/m]
753.4	=	CS 21 reinf active:C2						
	1	1.0762E-01	6.075E-02	9.103E-03	0.000	0.000	210000	8.69
		6.270E-05	2.887E-02	3.986E-03	0.402	0.400	80769	
851	=	VFT						
	=	Composit with materials: 1 30 31 300						
	1	1.6422E-01	1.075E-01	1.947E-02	0.000	0.000	210000	63.26
		6.270E-05	4.627E-02	8.980E-03	0.218	0.113	80769	
851.1	=	CS 1 steel alone						
	1	1.0696E-01	6.075E-02	9.037E-03	0.000	0.000	210000	8.40
		6.270E-05	2.882E-02	3.986E-03	0.400	0.400	80769	
851.2	=	CS 10 prefab. slab C1						
	1	1.0696E-01	6.075E-02	9.037E-03	0.000	0.000	210000	8.40
		6.270E-05	2.882E-02	3.986E-03	0.400	0.400	80769	
851.3	=	CS 20 in-situ conc:C2						
	1	1.0696E-01	6.075E-02	9.037E-03	0.000	0.000	210000	8.40
		6.270E-05	2.882E-02	3.986E-03	0.400	0.400	80769	
851.4	=	CS 21 reinf active:C2						
	1	1.0696E-01	6.075E-02	9.037E-03	0.000	0.000	210000	8.40
		6.270E-05	2.882E-02	3.986E-03	0.400	0.400	80769	
852	=	VFT						
	=	Composit with materials: 1 30 31 300						
	1	1.6422E-01	1.075E-01	1.947E-02	0.000	0.000	210000	63.26
		6.270E-05	4.627E-02	8.980E-03	0.218	0.113	80769	
852.1	=	CS 1 steel alone						
	1	1.0696E-01	6.075E-02	9.037E-03	0.000	0.000	210000	8.40
		6.270E-05	2.882E-02	3.986E-03	0.400	0.400	80769	
852.2	=	CS 10 prefab. slab C1						
	1	1.0696E-01	6.075E-02	9.037E-03	0.000	0.000	210000	8.40
		6.270E-05	2.882E-02	3.986E-03	0.400	0.400	80769	
852.3	=	CS 20 in-situ conc:C2						
	1	1.0696E-01	6.075E-02	9.037E-03	0.000	0.000	210000	8.40
		6.270E-05	2.882E-02	3.986E-03	0.400	0.400	80769	
852.4	=	CS 21 reinf active:C2						
	1	1.0696E-01	6.075E-02	9.037E-03	0.000	0.000	210000	8.40
		6.270E-05	2.882E-02	3.986E-03	0.400	0.400	80769	
853	=	VFT						
	=	Composit with materials: 1 25 210 31 300						
	1	1.1360E-01	6.454E-02	1.086E-02	0.000	0.000	210000	63.55
		6.270E-05	3.273E-02	4.484E-03	0.373	0.339	80769	
853.1	=	CS 1 steel alone						
	1	1.0696E-01	6.075E-02	9.037E-03	0.000	0.000	210000	8.40
		6.270E-05	2.882E-02	3.986E-03	0.400	0.400	80769	
853.2	=	CS 10 prefab. slab C1						
	1	1.0696E-01	6.075E-02	9.037E-03	0.000	0.000	210000	8.40
		6.270E-05	2.882E-02	3.986E-03	0.400	0.400	80769	
853.3	=	CS 20 in-situ conc:C2						
	1	1.0696E-01	6.075E-02	9.037E-03	0.000	0.000	210000	8.40
		6.270E-05	2.882E-02	3.986E-03	0.400	0.400	80769	
853.4	=	CS 21 reinf active:C2						
	1	1.0762E-01	6.075E-02	9.103E-03	0.000	0.000	210000	8.69
		6.270E-05	2.887E-02	3.986E-03	0.402	0.400	80769	

Summary of all beam elements

Cross sections

No.	TotLength [m]	Max.Length [m]	TotWeight [t]	Surface [m2]	Title
11	80.000	2.000	1035.958		B/H = 394
12	80.000	2.000	1035.958		B/H = 394
13	80.000	2.000	1035.958		B/H = 394
14	80.000	2.000	1035.958		B/H = 394
21	14.250	2.374	267.188		B/H = 500
22	14.250	2.000	267.188		B/H = 500
23	14.250	2.000	267.188		B/H = 500

SOFiSTiK AG - www.sofistik.de

Composite bridge 38+50+38, b=14.25m, 2x2HL1100R HISTAR460 , slab 0.30m C30/37

Cross sections

No.	TotLength [m]	Max.Length [m]	TotWeight [t]	Surface [m2]	Title
24	14.250	2.374	267.188		B/H = 500
30	33.800	1.690	540.800		B/H = 400
32	14.250	2.000	0.356		B/H = 10
33	14.250	2.000	0.356		B/H = 10
41	8.000	1.011	3.989	30.171	HL 1100 R
42	8.000	1.269	3.989	30.171	HL 1100 R
43	8.000	1.228	3.989	30.171	HL 1100 R
44	8.000	1.271	3.989	30.171	HL 1100 R
154	24.600	2.375	159.814	700.116	VFT (151)
157	24.600	2.172	159.814	700.116	VFT (151)
160	0.900	0.210	5.873	22.158	VFT (153)
161	0.900	0.450	5.873	22.158	VFT (153)
162	1.800	0.350	16.413	49.716	VFT (153)
163	1.800	0.489	16.413	49.716	VFT (153)
254	25.000	2.571	162.413	711.500	VFT (251)
257	25.000	2.554	162.413	711.500	VFT (251)
261	1.800	0.215	16.413	49.716	VFT (253)
262	1.800	0.450	16.413	49.716	VFT (253)
354	24.600	2.375	159.814	700.116	VFT (351)
355	24.600	2.000	159.814	700.116	VFT (351)
360	0.900	0.210	5.873	22.158	VFT (353)
361	0.900	0.450	5.873	22.158	VFT (353)
	92.800	2.843	679.454	2606.990	haunched
Sum	723.300		7502.729	7238.632	

Cross section No. 10 - B/H = 20 / 20 cm

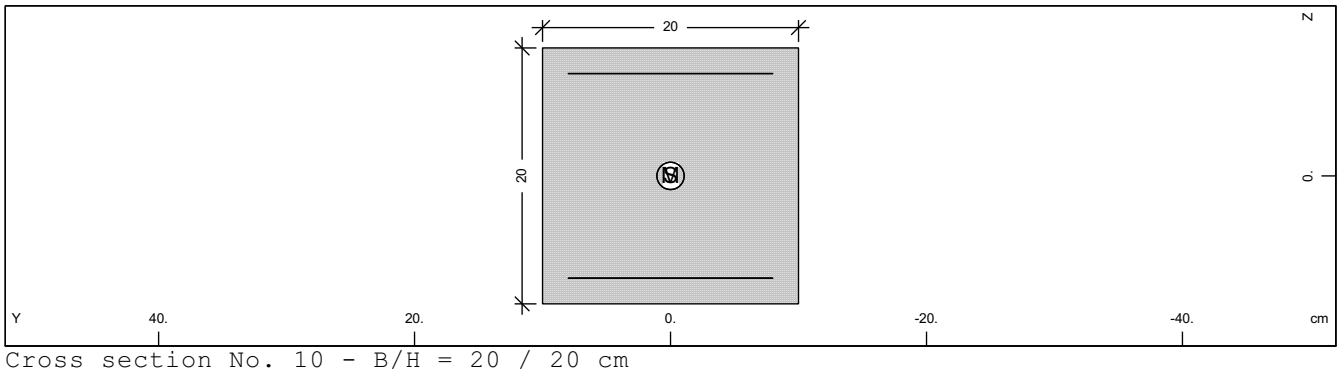

Cross section No. 10 - B/H = 20 / 20 cm

Static properties of cross section

Mat NoR	A[m2] It[m4]	Ay/Az/Ayz [m2]	Iy/Iz/Iyz [m4]	ys/zs [cm]	y/z-sc [cm]	modules [MPa]	gam [kN/m]
50	4.0000E-02		1.333E-04	0.00	0.00	32837	1.00
100	2.240E-04		1.333E-04	0.00	0.00	13682	

Additional static properties of cross section

Alfa-T [1/°K]	ymin ymax [cm]	zmin zmax [cm]	hymin hzmin [cm]	AK AB [m2]	MB	Tau-T Tau-B [1/m3]	Tau-Vy Tau-Vz [1/m2]
1.0E-05	-10.00	-10.00		2.250E-02	100	4.444E+02	3.750E+01
	10.00	10.00		4.000E-02			3.750E+01

Rectangular cross-section/T-beam

H/B [cm]	So/Su [cm]	Aso/u [cm2]	Ho/Bo [cm]	B-eff [cm]
20.00	2.00			5.00
20.00	2.00			

SOFiSTiK AG - www.sofistik.de

Composite bridge 38+50+38, b=14.25m, 2x2HL1100R HISTAR460 , slab 0.30m C30/37

Additional Design Data

M	periphery-O/-I [m2/m]	[m2/m]	deff [cm]	t-min [cm]	t-max [cm]	SMP [o/o]	thet-p [tm2/m]	thet-y [tm2/m]	thet-z [tm2/m]	thet-yz [tm2/m]
	0.800		10.00	20.00	20.00	0.0	0.001	0.000	0.000	

Reinforcement global values

Layer	mS	mR	area [cm2]	lower-A [cm2]	upper-A [cm2]	yL [cm]	zL [cm]	L-tors [cm]	N-pr [kN]	M-pr [kNm]
M1	50	100	0.16	0.00		0.00	8.00	32.00		
M2	50	100	0.16	0.00		0.00	-8.00	32.00		

Cross section No. 11 - B/H = 394.2 / 131.4 cm

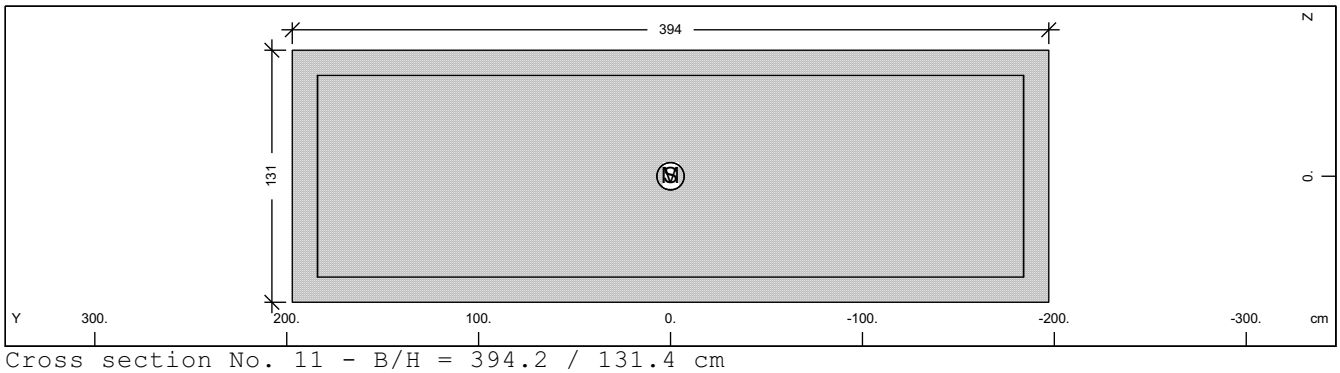

Cross section No. 11 - B/H = 394.2 / 131.4 cm

Static properties of cross section

Mat NoR	A[m2] It[m4]	Ay/Az/Ayz [m2]	Iy/Iz/Iyz [m4]	ys/zs [cm]	y/z-sc [cm]	modules [MPa]	gam [kN/m]
50	5.1798E+00		7.453E-01	0.00	0.00	32837	129.49
100	2.352E+00		6.708E+00	0.00	0.00	13682	

Additional static properties of cross section

Alfa-T [1/°K]	ymin ymax [cm]	zmin zmax [cm]	hymin hzmin [cm]	AK AB [m2]	MB	Tau-T Tau-B [1/m3]	Tau-Vy Tau-Vz [1/m2]
1.0E-05	-197.10	-65.70		2.833E+00	100	3.582E-01	2.896E-01
	197.10	65.70		5.180E+00			2.896E-01

Rectangular cross-section/T-beam

H/B [cm]	So/Su [cm]	Aso/u [cm2]	Ho/Bo [cm]	B-eff [cm]
131.40	13.14			49.28
394.20	13.14			

Additional Design Data

M	periphery-O/-I [m2/m]	[m2/m]	deff [cm]	t-min [cm]	t-max [cm]	SMP [o/o]	thet-p [tm2/m]	thet-y [tm2/m]	thet-z [tm2/m]	thet-yz [tm2/m]
	10.512		98.55	131.40	394.20	0.0	18.632	1.863	16.769	

Reinforcement global values

Layer	mS	mR	area [cm2]	lower-A [cm2]	upper-A [cm2]	yL [cm]	zL [cm]	L-tors [cm]	N-pr [kN]	M-pr [kNm]
M1	50	100	3.68	0.00		0.00	52.56	367.92		
M2	50	100	3.68	0.00		0.00	-52.56	367.92		
M3	50	100	2.10	0.00		0.00	0.00	210.24		

SOFiSTiK AG - www.sofistik.de

Composite bridge 38+50+38, b=14.25m, 2x2HL1100R HISTAR460 , slab 0.30m C30/37

Cross section No. 12 - B/H = 394.2 / 131.4 cm

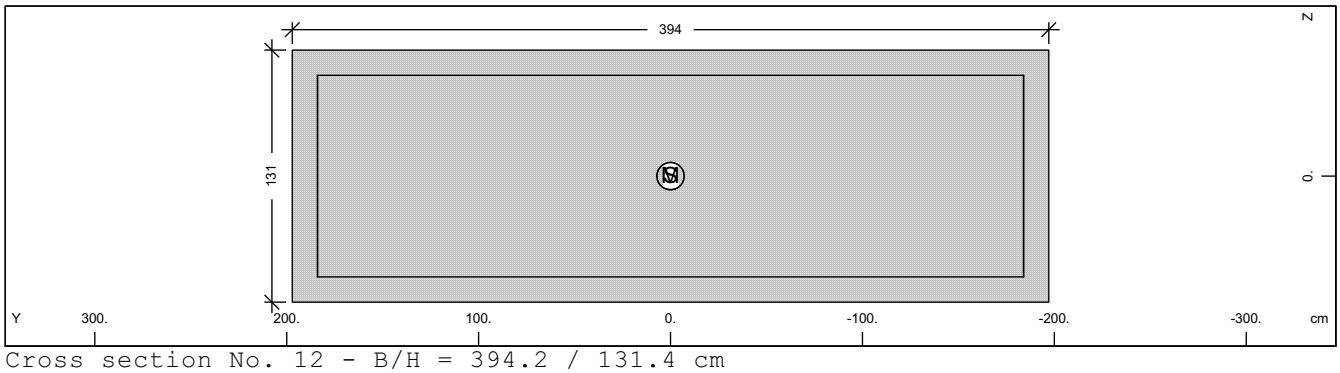

Cross section No. 12 - B/H = 394.2 / 131.4 cm

Static properties of cross section

Mat NoR	A[m2] It[m4]	Ay/Az/Ayz [m2]	Iy/Iz/Iyz [m4]	ys/zs [cm]	y/z-sc [cm]	modules [MPa]	gam [kN/m]
50	5.1798E+00		7.453E-01	0.00	0.00	32837	129.49
100	2.352E+00		6.708E+00	0.00	0.00	13682	

Additional static properties of cross section

Alfa-T [1/°K]	ymin ymax [cm]	zmin zmax [cm]	hymin hzmin [cm]	AK AB [m2]	MB	Tau-T Tau-B [1/m3]	Tau-Vy Tau-Vz [1/m2]
1.0E-05	-197.10	-65.70		2.833E+00	100	3.582E-01	2.896E-01
	197.10	65.70		5.180E+00			2.896E-01

Rectangular cross-section/T-beam

H/B [cm]	So/Su [cm]	Aso/u [cm2]	Ho/Bo [cm]	B-eff [cm]
131.40	13.14			49.28
394.20	13.14			

Additional Design Data

M	periphery-O/-I [m2/m] [m2/m]	deff [cm]	t-min [cm]	t-max [cm]	SMP [o/o]	thet-p [tm2/m]	thet-y [tm2/m]	thet-z [tm2/m]	thet-yz [tm2/m]
	10.512	98.55	131.40	394.20	0.0	18.632	1.863	16.769	

Reinforcement global values

Layer	mS	mR	area [cm2]	lower-A [cm2]	upper-A [cm2]	yL [cm]	zL [cm]	L-tors [cm]	N-pr [kN]	M-pr [kNm]
M1	50	100	3.68	0.00		0.00	52.56	367.92		
M2	50	100	3.68	0.00		0.00	-52.56	367.92		
M3	50	100	2.10	0.00		0.00	0.00	210.24		

SOFiSTiK AG - www.sofistik.de

Composite bridge 38+50+38, b=14.25m, 2x2HL1100R HISTAR460 , slab 0.30m C30/37

Cross section No. 13 - B/H = 394.2 / 131.4 cm

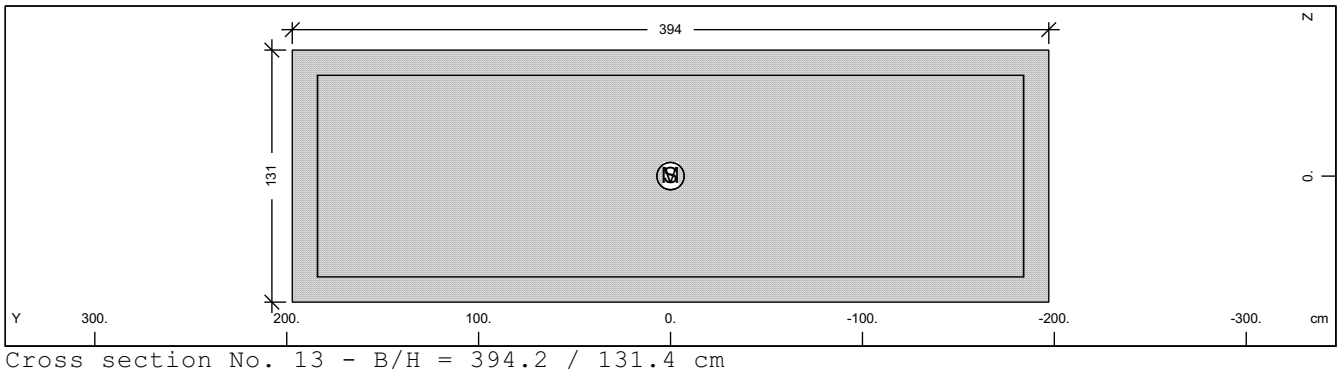

Cross section No. 13 - B/H = 394.2 / 131.4 cm

Static properties of cross section

Mat NoR	A[m2] It[m4]	Ay/Az/Ayz [m2]	Iy/Iz/Iyz [m4]	ys/zs [cm]	y/z-sc [cm]	modules [MPa]	gam [kN/m]
50	5.1798E+00		7.453E-01	0.00	0.00	32837	129.49
100	2.352E+00		6.708E+00	0.00	0.00	13682	

Additional static properties of cross section

Alfa-T [1/°K]	ymin ymax [cm]	zmin zmax [cm]	hymin hzmin [cm]	AK AB [m2]	MB	Tau-T Tau-B [1/m3]	Tau-Vy Tau-Vz [1/m2]
1.0E-05	-197.10	-65.70		2.833E+00	100	3.582E-01	2.896E-01
	197.10	65.70		5.180E+00			2.896E-01

Rectangular cross-section/T-beam

H/B [cm]	So/Su [cm]	Aso/u [cm2]	Ho/Bo [cm]	B-eff [cm]
131.40	13.14			49.28
394.20	13.14			

Additional Design Data

M	periphery-O/-I [m2/m] [m2/m]	deff [cm]	t-min [cm]	t-max [cm]	SMP [o/o]	thet-p [tm2/m]	thet-y [tm2/m]	thet-z [tm2/m]	thet-yz [tm2/m]
	10.512	98.55	131.40	394.20	0.0	18.632	1.863	16.769	

Reinforcement global values

Layer	mS	mR	area [cm2]	lower-A [cm2]	upper-A [cm2]	yL [cm]	zL [cm]	L-tors [cm]	N-pr [kN]	M-pr [kNm]
M1	50	100	3.68	0.00		0.00	52.56	367.92		
M2	50	100	3.68	0.00		0.00	-52.56	367.92		
M3	50	100	2.10	0.00		0.00	0.00	210.24		

SOFiSTiK AG - www.sofistik.de

Composite bridge 38+50+38, b=14.25m, 2x2HL1100R HISTAR460 , slab 0.30m C30/37

Cross section No. 14 - B/H = 394.2 / 131.4 cm

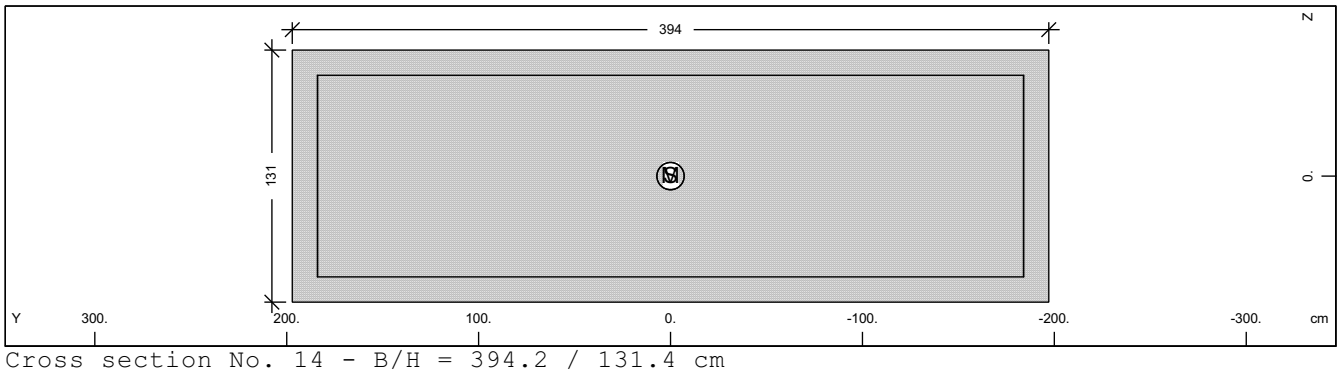

Cross section No. 14 - B/H = 394.2 / 131.4 cm

Static properties of cross section

Mat NoR	A[m2] It[m4]	Ay/Az/Ayz [m2]	Iy/Iz/Iyz [m4]	ys/zs [cm]	y/z-sc [cm]	modules [MPa]	gam [kN/m]
50	5.1798E+00		7.453E-01	0.00	0.00	32837	129.49
100	2.352E+00		6.708E+00	0.00	0.00	13682	

Additional static properties of cross section

Alfa-T [1/°K]	ymin ymax [cm]	zmin zmax [cm]	hymin hzmin [cm]	AK AB [m2]	MB	Tau-T Tau-B [1/m3]	Tau-Vy Tau-Vz [1/m2]
1.0E-05	-197.10	-65.70		2.833E+00	100	3.582E-01	2.896E-01
	197.10	65.70		5.180E+00			2.896E-01

Rectangular cross-section/T-beam

H/B [cm]	So/Su [cm]	Aso/u [cm2]	Ho/Bo [cm]	B-eff [cm]
131.40	13.14			49.28
394.20	13.14			

Additional Design Data

M	periphery-O/-I [m2/m] [m2/m]	deff [cm]	t-min [cm]	t-max [cm]	SMP [o/o]	thet-p [tm2/m]	thet-y [tm2/m]	thet-z [tm2/m]	thet-yz [tm2/m]
	10.512	98.55	131.40	394.20	0.0	18.632	1.863	16.769	

Reinforcement global values

Layer	mS	mR	area [cm2]	lower-A [cm2]	upper-A [cm2]	yL [cm]	zL [cm]	L-tors [cm]	N-pr [kN]	M-pr [kNm]
M1	50	100	3.68	0.00		0.00	52.56	367.92		
M2	50	100	3.68	0.00		0.00	-52.56	367.92		
M3	50	100	2.10	0.00		0.00	0.00	210.24		

SOFiSTiK AG - www.sofistik.de

Composite bridge 38+50+38, b=14.25m, 2x2HL1100R HISTAR460 , slab 0.30m C30/37

Cross section No. 15 - B/H = 394.2 / 131.4 cm

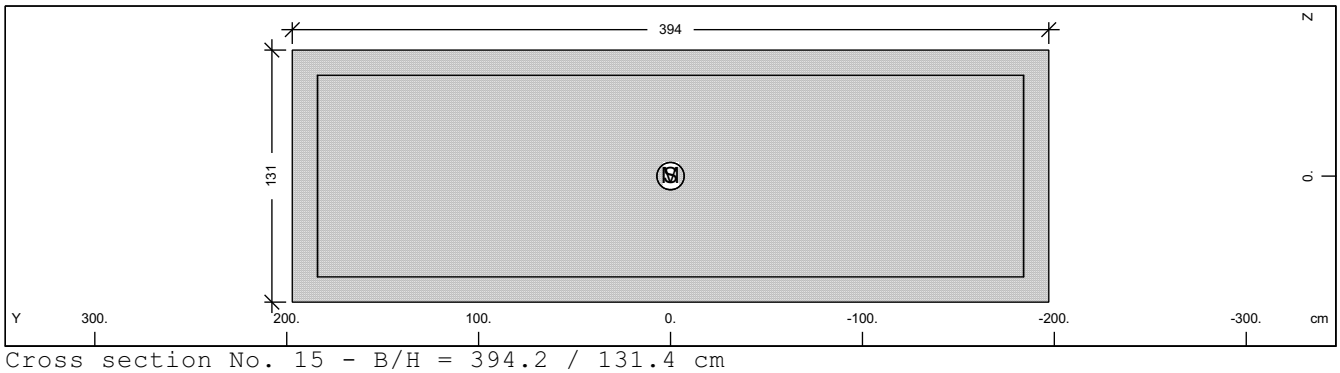

Cross section No. 15 - B/H = 394.2 / 131.4 cm

Static properties of cross section

Mat NoR	A[m2] It[m4]	Ay/Az/Ayz [m2]	Iy/Iz/Iyz [m4]	ys/zs [cm]	y/z-sc [cm]	modules [MPa]	gam [kN/m]
50	5.1798E+00		7.453E-01	0.00	0.00	32837	129.49
100	2.352E+00		6.708E+00	0.00	0.00	13682	

Additional static properties of cross section

Alfa-T [1/°K]	ymin ymax [cm]	zmin zmax [cm]	hymin hzmin [cm]	AK AB [m2]	MB	Tau-T Tau-B [1/m3]	Tau-Vy Tau-Vz [1/m2]
1.0E-05	-197.10	-65.70		2.833E+00	100	3.582E-01	2.896E-01
	197.10	65.70		5.180E+00			2.896E-01

Rectangular cross-section/T-beam

H/B [cm]	So/Su [cm]	Aso/u [cm2]	Ho/Bo [cm]	B-eff [cm]
131.40	13.14			49.28
394.20	13.14			

Additional Design Data

M	periphery-O/-I [m2/m] [m2/m]	deff [cm]	t-min [cm]	t-max [cm]	SMP [o/o]	thet-p [tm2/m]	thet-y [tm2/m]	thet-z [tm2/m]	thet-yz [tm2/m]
	10.512	98.55	131.40	394.20	0.0	18.632	1.863	16.769	

Reinforcement global values

Layer	mS	mR	area [cm2]	lower-A [cm2]	upper-A [cm2]	yL [cm]	zL [cm]	L-tors [cm]	N-pr [kN]	M-pr [kNm]
M1	50	100	3.68	0.00		0.00	52.56	367.92		
M2	50	100	3.68	0.00		0.00	-52.56	367.92		
M3	50	100	2.10	0.00		0.00	0.00	210.24		

SOFiSTiK AG - www.sofistik.de

Composite bridge 38+50+38, b=14.25m, 2x2HL1100R HISTAR460 , slab 0.30m C30/37

Cross section No. 16 - B/H = 394.2 / 131.4 cm

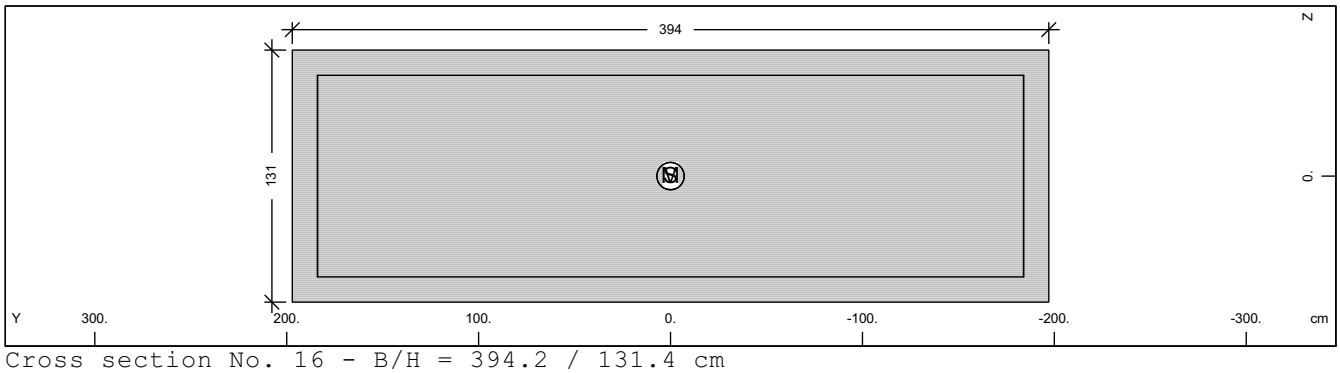

Cross section No. 16 - B/H = 394.2 / 131.4 cm

Static properties of cross section

Mat NoR	A[m2] It[m4]	Ay/Az/Ayz [m2]	Iy/Iz/Iyz [m4]	ys/zs [cm]	y/z-sc [cm]	modules [MPa]	gam [kN/m]
50	5.1798E+00		7.453E-01	0.00	0.00	32837	129.49
100	2.352E+00		6.708E+00	0.00	0.00	13682	

Additional static properties of cross section

Alfa-T [1/°K]	ymin ymax [cm]	zmin zmax [cm]	hymin hzmin [cm]	AK AB [m2]	MB	Tau-T Tau-B [1/m3]	Tau-Vy Tau-Vz [1/m2]
1.0E-05	-197.10	-65.70		2.833E+00	100	3.582E-01	2.896E-01
	197.10	65.70		5.180E+00			2.896E-01

Rectangular cross-section/T-beam

H/B [cm]	So/Su [cm]	Aso/u [cm2]	Ho/Bo [cm]	B-eff [cm]
131.40	13.14			49.28
394.20	13.14			

Additional Design Data

M	periphery-O/-I [m2/m] [m2/m]	deff [cm]	t-min [cm]	t-max [cm]	SMP [o/o]	thet-p [tm2/m]	thet-y [tm2/m]	thet-z [tm2/m]	thet-yz [tm2/m]
	10.512	98.55	131.40	394.20	0.0	18.632	1.863	16.769	

Reinforcement global values

Layer	mS	mR	area [cm2]	lower-A [cm2]	upper-A [cm2]	yL [cm]	zL [cm]	L-tors [cm]	N-pr [kN]	M-pr [kNm]
M1	50	100	3.68	0.00		0.00	52.56	367.92		
M2	50	100	3.68	0.00		0.00	-52.56	367.92		
M3	50	100	2.10	0.00		0.00	0.00	210.24		

SOFiSTiK AG - www.sofistik.de

Composite bridge 38+50+38, b=14.25m, 2x2HL1100R HISTAR460 , slab 0.30m C30/37

Cross section No. 17 - B/H = 394.2 / 131.4 cm

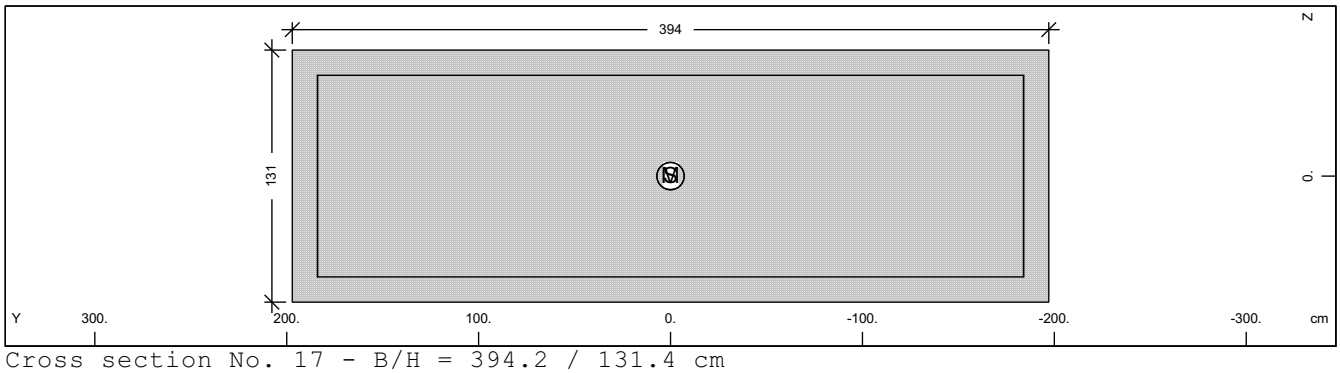

Cross section No. 17 - B/H = 394.2 / 131.4 cm

Static properties of cross section

Mat NoR	A[m2] It[m4]	Ay/Az/Ayz [m2]	Iy/Iz/Iyz [m4]	ys/zs [cm]	y/z-sc [cm]	modules [MPa]	gam [kN/m]
50	5.1798E+00		7.453E-01	0.00	0.00	32837	129.49
100	2.352E+00		6.708E+00	0.00	0.00	13682	

Additional static properties of cross section

Alfa-T [1/°K]	ymin ymax [cm]	zmin zmax [cm]	hymin hzmin [cm]	AK AB [m2]	MB	Tau-T Tau-B [1/m3]	Tau-Vy Tau-Vz [1/m2]
1.0E-05	-197.10	-65.70		2.833E+00	100	3.582E-01	2.896E-01
	197.10	65.70		5.180E+00			2.896E-01

Rectangular cross-section/T-beam

H/B [cm]	So/Su [cm]	Aso/u [cm2]	Ho/Bo [cm]	B-eff [cm]
131.40	13.14			49.28
394.20	13.14			

Additional Design Data

M	periphery-O/-I [m2/m] [m2/m]	deff [cm]	t-min [cm]	t-max [cm]	SMP [o/o]	thet-p [tm2/m]	thet-y [tm2/m]	thet-z [tm2/m]	thet-yz [tm2/m]
	10.512	98.55	131.40	394.20	0.0	18.632	1.863	16.769	

Reinforcement global values

Layer	mS	mR	area [cm2]	lower-A [cm2]	upper-A [cm2]	yL [cm]	zL [cm]	L-tors [cm]	N-pr [kN]	M-pr [kNm]
M1	50	100	3.68	0.00		0.00	52.56	367.92		
M2	50	100	3.68	0.00		0.00	-52.56	367.92		
M3	50	100	2.10	0.00		0.00	0.00	210.24		

SOFiSTiK AG - www.sofistik.de

Composite bridge 38+50+38, b=14.25m, 2x2HL1100R HISTAR460 , slab 0.30m C30/37

Cross section No. 18 - B/H = 394.2 / 131.4 cm

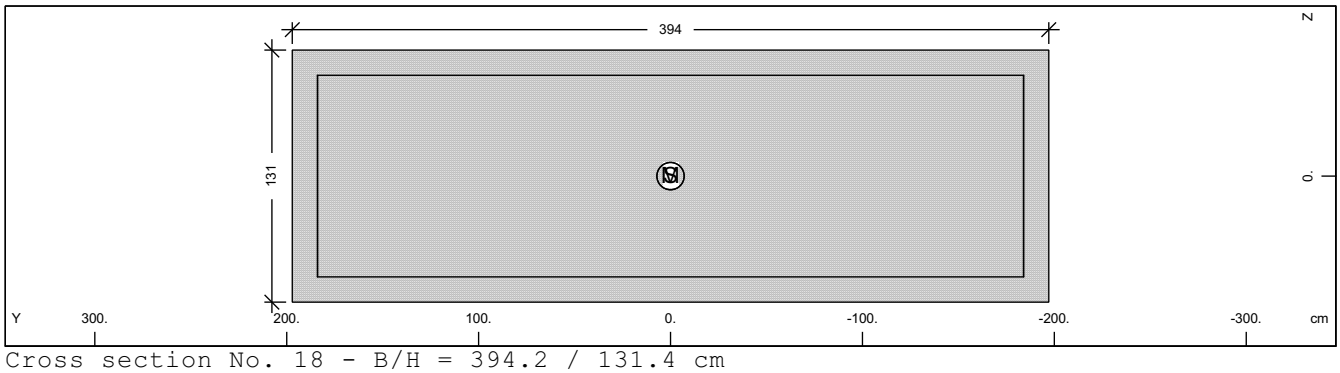

Cross section No. 18 - B/H = 394.2 / 131.4 cm

Static properties of cross section

Mat NoR	A[m2] It[m4]	Ay/Az/Ayz [m2]	Iy/Iz/Iyz [m4]	ys/zs [cm]	y/z-sc [cm]	modules [MPa]	gam [kN/m]
50	5.1798E+00		7.453E-01	0.00	0.00	32837	129.49
100	2.352E+00		6.708E+00	0.00	0.00	13682	

Additional static properties of cross section

Alfa-T [1/°K]	ymin ymax [cm]	zmin zmax [cm]	hymin hzmin [cm]	AK AB [m2]	MB	Tau-T Tau-B [1/m3]	Tau-Vy Tau-Vz [1/m2]
1.0E-05	-197.10	-65.70		2.833E+00	100	3.582E-01	2.896E-01
	197.10	65.70		5.180E+00			2.896E-01

Rectangular cross-section/T-beam

H/B [cm]	So/Su [cm]	Aso/u [cm2]	Ho/Bo [cm]	B-eff [cm]
131.40	13.14			49.28
394.20	13.14			

Additional Design Data

M	periphery-O/-I [m2/m] [m2/m]	deff [cm]	t-min [cm]	t-max [cm]	SMP [o/o]	thet-p [tm2/m]	thet-y [tm2/m]	thet-z [tm2/m]	thet-yz [tm2/m]
	10.512	98.55	131.40	394.20	0.0	18.632	1.863	16.769	

Reinforcement global values

Layer	mS	mR	area [cm2]	lower-A [cm2]	upper-A [cm2]	yL [cm]	zL [cm]	L-tors [cm]	N-pr [kN]	M-pr [kNm]
M1	50	100	3.68	0.00		0.00	52.56	367.92		
M2	50	100	3.68	0.00		0.00	-52.56	367.92		
M3	50	100	2.10	0.00		0.00	0.00	210.24		

SOFiSTiK AG - www.sofistik.de

Composite bridge 38+50+38, b=14.25m, 2x2HL1100R HISTAR460 , slab 0.30m C30/37

Cross section No. 19 - B/H = 394.2 / 131.4 cm

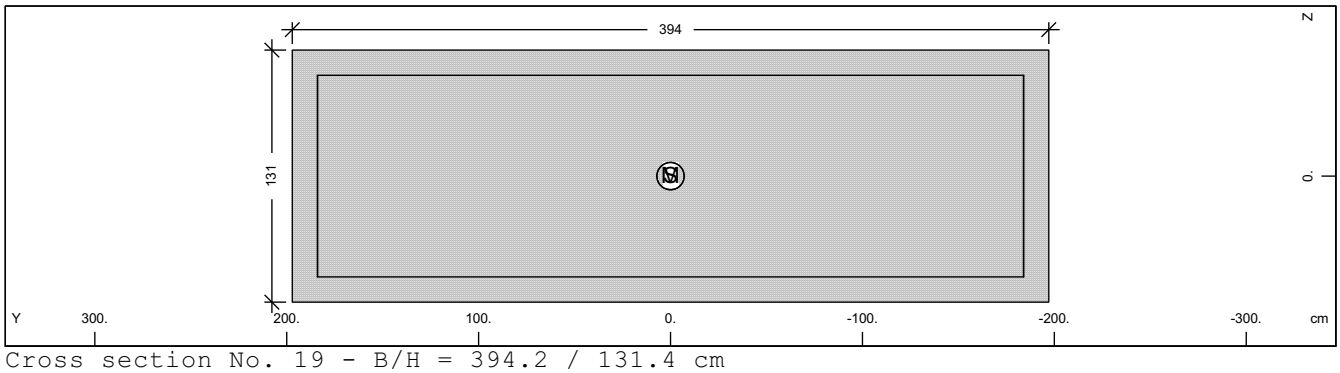

Cross section No. 19 - B/H = 394.2 / 131.4 cm

Static properties of cross section

Mat NoR	A[m2] It[m4]	Ay/Az/Ayz [m2]	Iy/Iz/Iyz [m4]	ys/zs [cm]	y/z-sc [cm]	modules [MPa]	gam [kN/m]
50	5.1798E+00		7.453E-01	0.00	0.00	32837	129.49
100	2.352E+00		6.708E+00	0.00	0.00	13682	

Additional static properties of cross section

Alfa-T [1/°K]	ymin ymax [cm]	zmin zmax [cm]	hymin hzmin [cm]	AK AB [m2]	MB	Tau-T Tau-B [1/m3]	Tau-Vy Tau-Vz [1/m2]
1.0E-05	-197.10	-65.70		2.833E+00	100	3.582E-01	2.896E-01
	197.10	65.70		5.180E+00			2.896E-01

Rectangular cross-section/T-beam

H/B [cm]	So/Su [cm]	Aso/u [cm2]	Ho/Bo [cm]	B-eff [cm]
131.40	13.14			49.28
394.20	13.14			

Additional Design Data

M	periphery-O/-I [m2/m] [m2/m]	deff [cm]	t-min [cm]	t-max [cm]	SMP [o/o]	thet-p [tm2/m]	thet-y [tm2/m]	thet-z [tm2/m]	thet-yz [tm2/m]
	10.512	98.55	131.40	394.20	0.0	18.632	1.863	16.769	

Reinforcement global values

Layer	mS	mR	area [cm2]	lower-A [cm2]	upper-A [cm2]	yL [cm]	zL [cm]	L-tors [cm]	N-pr [kN]	M-pr [kNm]
M1	50	100	3.68	0.00		0.00	52.56	367.92		
M2	50	100	3.68	0.00		0.00	-52.56	367.92		
M3	50	100	2.10	0.00		0.00	0.00	210.24		

SOFiSTiK AG - www.sofistik.de

Composite bridge 38+50+38, b=14.25m, 2x2HL1100R HISTAR460 , slab 0.30m C30/37

Cross section No. 21 - B/H = 500 / 150 cm

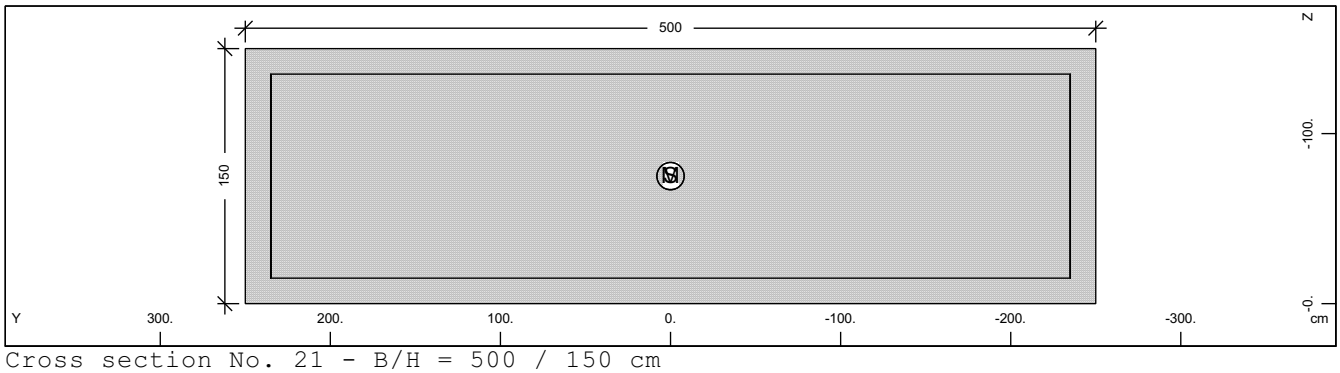

Cross section No. 21 - B/H = 500 / 150 cm

Static properties of cross section

Mat NoR	A[m2] It[m4]	Ay/Az/Ayz [m2]	Iy/Iz/Iyz [m4]	ys/zs [cm]	y/z-sc [cm]	modules [MPa]	gam [kN/m]
50	7.5000E+00		1.406E+00	0.00	0.00	32837	187.50
100	4.539E+00		1.562E+01	-75.00	-75.00	13682	

Additional static properties of cross section

Alfa-T [1/°K]	ymin ymax [cm]	zmin zmax [cm]	hymin hzmin [cm]	AK AB [m2]	MB	Tau-T Tau-B [1/m3]	Tau-Vy Tau-Vz [1/m2]
1.0E-05	-250.00	-75.00		4.083E+00	100	2.123E-01	2.000E-01
	250.00	75.00		7.500E+00			2.000E-01

Rectangular cross-section/T-beam

H/B [cm]	So/Su [cm]	Aso/u [cm2]	Ho/Bo [cm]	B-eff [cm]
150.00	15.00			57.69
500.00	15.00			

Additional Design Data

M	periphery-O/-I [m2/m] [m2/m]	deff [cm]	t-min [cm]	t-max [cm]	SMP [o/o]	thet-p [tm2/m]	thet-y [tm2/m]	thet-z [tm2/m]	thet-yz [tm2/m]
	13.000	115.38	150.00	500.00	0.0	42.578	3.516	39.062	

Reinforcement global values

Layer	mS	mR	area [cm2]	lower-A [cm2]	upper-A [cm2]	yL [cm]	zL [cm]	L-tors [cm]	N-pr [kN]	M-pr [kNm]
M1	50	100	4.70	0.00		0.00	-15.00	470.00		
M2	50	100	4.70	0.00		0.00	-135.00	470.00		
M3	50	100	2.40	0.00		0.00	-75.00	240.00		

SOFiSTiK AG - www.sofistik.de

Composite bridge 38+50+38, b=14.25m, 2x2HL1100R HISTAR460 , slab 0.30m C30/37

Cross section No. 22 - B/H = 500 / 150 cm

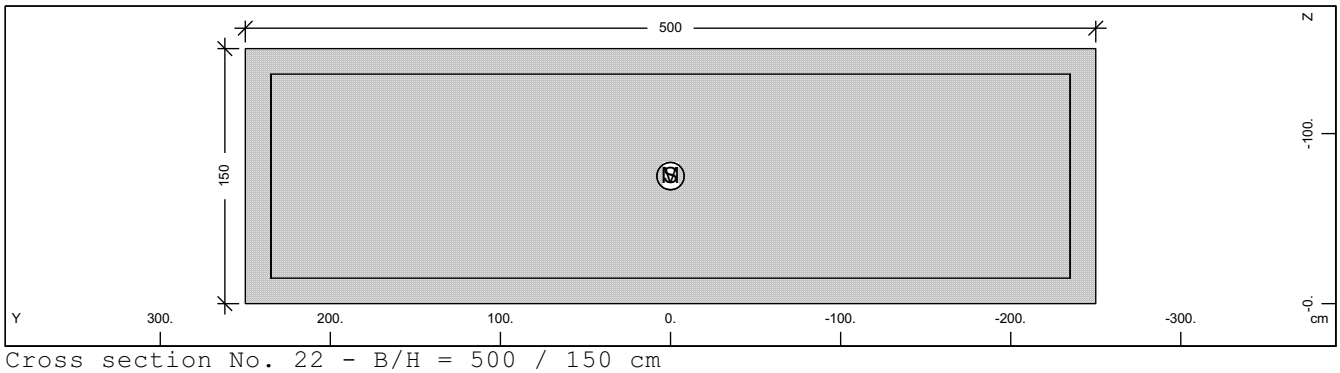

Cross section No. 22 - B/H = 500 / 150 cm

Static properties of cross section

Mat NoR	A[m2] It[m4]	Ay/Az/Ayz [m2]	Iy/Iz/Iyz [m4]	ys/zs [cm]	y/z-sc [cm]	modules [MPa]	gam [kN/m]
50	7.5000E+00		1.406E+00	0.00	0.00	32837	187.50
100	4.539E+00		1.562E+01	-75.00	-75.00	13682	

Additional static properties of cross section

Alfa-T [1/°K]	ymin ymax [cm]	zmin zmax [cm]	hymin hzmin [cm]	AK AB [m2]	MB	Tau-T Tau-B [1/m3]	Tau-Vy Tau-Vz [1/m2]
1.0E-05	-250.00	-75.00		4.083E+00	100	2.123E-01	2.000E-01
	250.00	75.00		7.500E+00			2.000E-01

Rectangular cross-section/T-beam

H/B [cm]	So/Su [cm]	Aso/u [cm2]	Ho/Bo [cm]	B-eff [cm]
150.00	15.00			57.69
500.00	15.00			

Additional Design Data

M	periphery-O/-I [m2/m] [m2/m]	deff [cm]	t-min [cm]	t-max [cm]	SMP [o/o]	thet-p [tm2/m]	thet-y [tm2/m]	thet-z [tm2/m]	thet-yz [tm2/m]
	13.000	115.38	150.00	500.00	0.0	42.578	3.516	39.062	

Reinforcement global values

Layer	mS	mR	area [cm2]	lower-A [cm2]	upper-A [cm2]	yL [cm]	zL [cm]	L-tors [cm]	N-pr [kN]	M-pr [kNm]
M1	50	100	4.70	0.00		0.00	-15.00	470.00		
M2	50	100	4.70	0.00		0.00	-135.00	470.00		
M3	50	100	2.40	0.00		0.00	-75.00	240.00		

SOFiSTiK AG - www.sofistik.de

Composite bridge 38+50+38, b=14.25m, 2x2HL1100R HISTAR460 , slab 0.30m C30/37

Cross section No. 23 - B/H = 500 / 150 cm

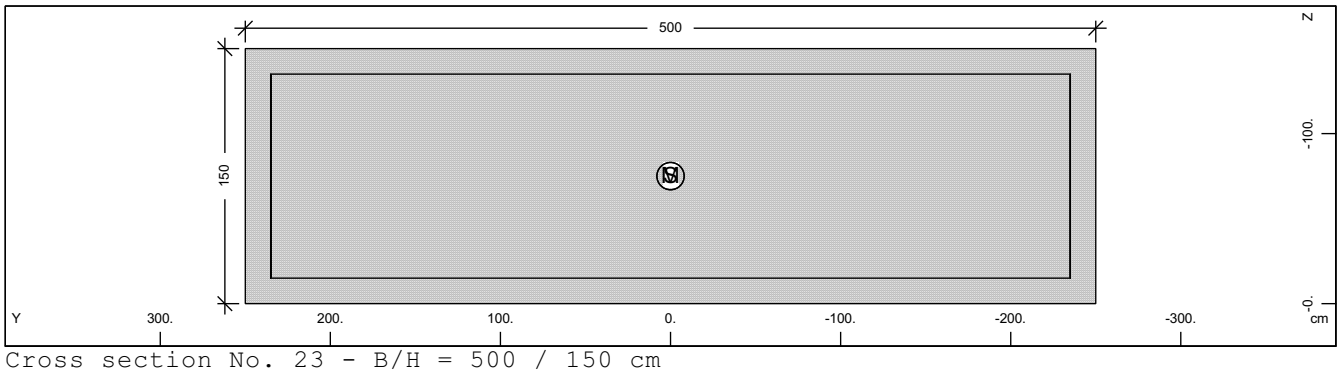

Cross section No. 23 - B/H = 500 / 150 cm

Static properties of cross section

Mat NoR	A[m2] It[m4]	Ay/Az/Ayz [m2]	Iy/Iz/Iyz [m4]	ys/zs [cm]	y/z-sc [cm]	modules [MPa]	gam [kN/m]
50	7.5000E+00		1.406E+00	0.00	0.00	32837	187.50
100	4.539E+00		1.562E+01	-75.00	-75.00	13682	

Additional static properties of cross section

Alfa-T [1/°K]	ymin ymax [cm]	zmin zmax [cm]	hymin hzmin [cm]	AK AB [m2]	MB	Tau-T Tau-B [1/m3]	Tau-Vy Tau-Vz [1/m2]
1.0E-05	-250.00	-75.00		4.083E+00	100	2.123E-01	2.000E-01
	250.00	75.00		7.500E+00			2.000E-01

Rectangular cross-section/T-beam

H/B [cm]	So/Su [cm]	Aso/u [cm2]	Ho/Bo [cm]	B-eff [cm]
150.00	15.00			57.69
500.00	15.00			

Additional Design Data

M	periphery-O/-I [m2/m] [m2/m]	deff [cm]	t-min [cm]	t-max [cm]	SMP [o/o]	thet-p [tm2/m]	thet-y [tm2/m]	thet-z [tm2/m]	thet-yz [tm2/m]
	13.000	115.38	150.00	500.00	0.0	42.578	3.516	39.062	

Reinforcement global values

Layer	mS	mR	area [cm2]	lower-A [cm2]	upper-A [cm2]	yL [cm]	zL [cm]	L-tors [cm]	N-pr [kN]	M-pr [kNm]
M1	50	100	4.70	0.00		0.00	-15.00	470.00		
M2	50	100	4.70	0.00		0.00	-135.00	470.00		
M3	50	100	2.40	0.00		0.00	-75.00	240.00		

SOFiSTiK AG - www.sofistik.de

Composite bridge 38+50+38, b=14.25m, 2x2HL1100R HISTAR460 , slab 0.30m C30/37

Cross section No. 24 - B/H = 500 / 150 cm

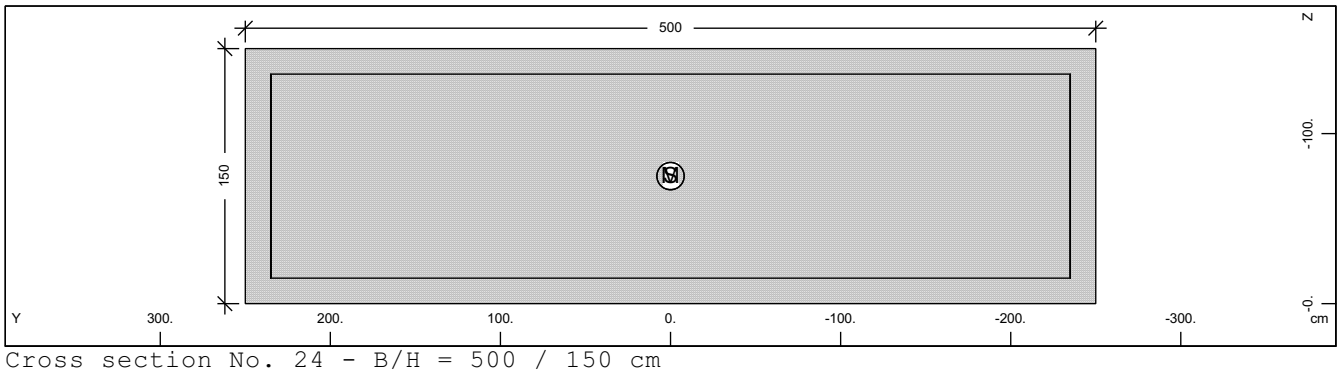

Cross section No. 24 - B/H = 500 / 150 cm

Static properties of cross section

Mat NoR	A[m2] It[m4]	Ay/Az/Ayz [m2]	Iy/Iz/Iyz [m4]	ys/zs [cm]	y/z-sc [cm]	modules [MPa]	gam [kN/m]
50	7.5000E+00		1.406E+00	0.00	0.00	32837	187.50
100	4.539E+00		1.562E+01	-75.00	-75.00	13682	

Additional static properties of cross section

Alfa-T [1/°K]	ymin ymax [cm]	zmin zmax [cm]	hymin hzmin [cm]	AK AB [m2]	MB	Tau-T Tau-B [1/m3]	Tau-Vy Tau-Vz [1/m2]
1.0E-05	-250.00	-75.00		4.083E+00	100	2.123E-01	2.000E-01
	250.00	75.00		7.500E+00			2.000E-01

Rectangular cross-section/T-beam

H/B [cm]	So/Su [cm]	Aso/u [cm2]	Ho/Bo [cm]	B-eff [cm]
150.00	15.00			57.69
500.00	15.00			

Additional Design Data

M	periphery-O/-I [m2/m] [m2/m]	deff [cm]	t-min [cm]	t-max [cm]	SMP [o/o]	thet-p [tm2/m]	thet-y [tm2/m]	thet-z [tm2/m]	thet-yz [tm2/m]
	13.000	115.38	150.00	500.00	0.0	42.578	3.516	39.062	

Reinforcement global values

Layer	mS	mR	area [cm2]	lower-A [cm2]	upper-A [cm2]	yL [cm]	zL [cm]	L-tors [cm]	N-pr [kN]	M-pr [kNm]
M1	50	100	4.70	0.00		0.00	-15.00	470.00		
M2	50	100	4.70	0.00		0.00	-135.00	470.00		
M3	50	100	2.40	0.00		0.00	-75.00	240.00		

SOFiSTiK AG - www.sofistik.de

Composite bridge 38+50+38, b=14.25m, 2x2HL1100R HISTAR460 , slab 0.30m C30/37

Cross section No. 25 - B/H = 500 / 150 cm

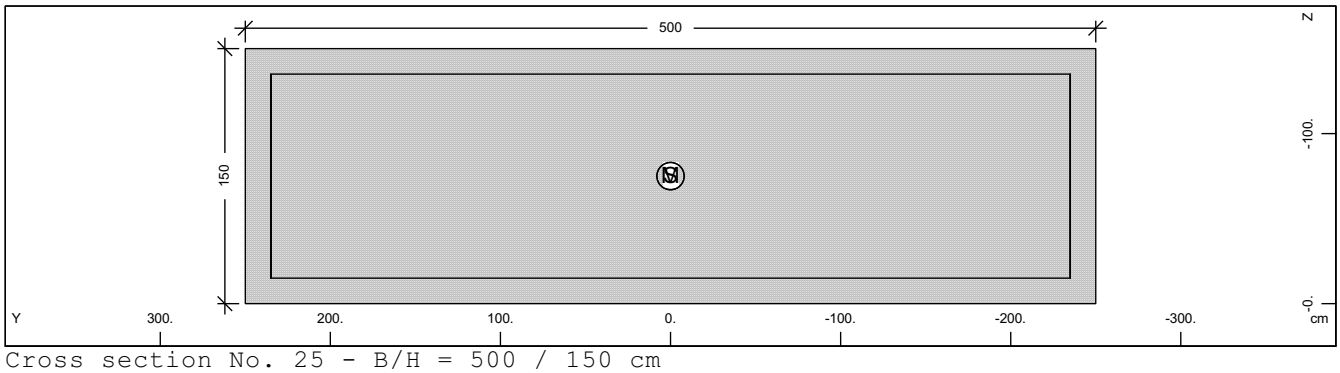

Cross section No. 25 - B/H = 500 / 150 cm

Static properties of cross section

Mat NoR	A[m2] It[m4]	Ay/Az/Ayz [m2]	Iy/Iz/Iyz [m4]	ys/zs [cm]	y/z-sc [cm]	modules [MPa]	gam [kN/m]
50	7.5000E+00		1.406E+00	0.00	0.00	32837	187.50
100	4.539E+00		1.562E+01	-75.00	-75.00	13682	

Additional static properties of cross section

Alfa-T [1/°K]	ymin ymax [cm]	zmin zmax [cm]	hymin hzmin [cm]	AK AB [m2]	MB	Tau-T Tau-B [1/m3]	Tau-Vy Tau-Vz [1/m2]
1.0E-05	-250.00	-75.00		4.083E+00	100	2.123E-01	2.000E-01
	250.00	75.00		7.500E+00			2.000E-01

Rectangular cross-section/T-beam

H/B [cm]	So/Su [cm]	Aso/u [cm2]	Ho/Bo [cm]	B-eff [cm]
150.00	15.00			57.69
500.00	15.00			

Additional Design Data

M	periphery-O/-I [m2/m] [m2/m]	deff [cm]	t-min [cm]	t-max [cm]	SMP [o/o]	thet-p [tm2/m]	thet-y [tm2/m]	thet-z [tm2/m]	thet-yz [tm2/m]
	13.000	115.38	150.00	500.00	0.0	42.578	3.516	39.062	

Reinforcement global values

Layer	mS	mR	area [cm2]	lower-A [cm2]	upper-A [cm2]	yL [cm]	zL [cm]	L-tors [cm]	N-pr [kN]	M-pr [kNm]
M1	50	100	4.70	0.00		0.00	-15.00	470.00		
M2	50	100	4.70	0.00		0.00	-135.00	470.00		
M3	50	100	2.40	0.00		0.00	-75.00	240.00		

SOFiSTiK AG - www.sofistik.de

Composite bridge 38+50+38, b=14.25m, 2x2HL1100R HISTAR460 , slab 0.30m C30/37

Cross section No. 26 - B/H = 500 / 150 cm

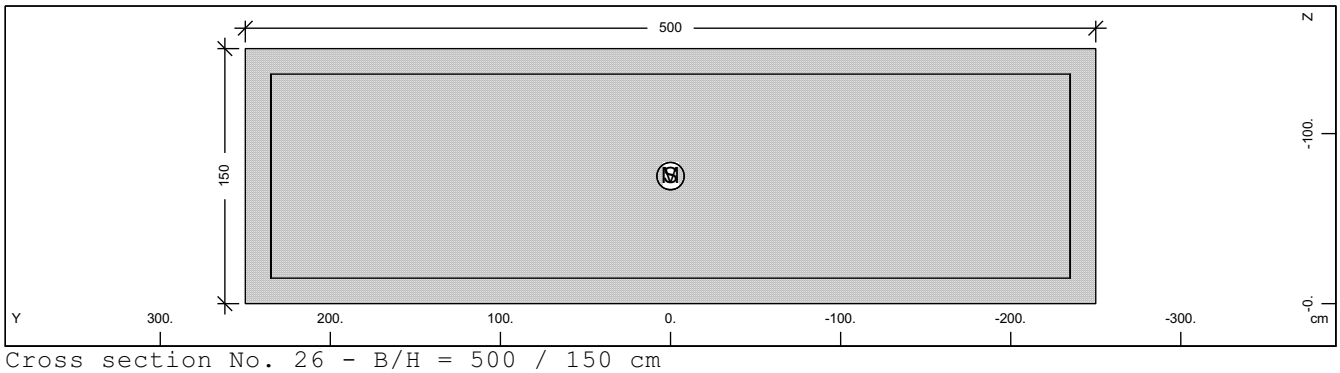

Cross section No. 26 - B/H = 500 / 150 cm

Static properties of cross section

Mat NoR	A[m2] It[m4]	Ay/Az/Ayz [m2]	Iy/Iz/Iyz [m4]	ys/zs [cm]	y/z-sc [cm]	modules [MPa]	gam [kN/m]
50	7.5000E+00		1.406E+00	0.00	0.00	32837	187.50
100	4.539E+00		1.562E+01	-75.00	-75.00	13682	

Additional static properties of cross section

Alfa-T [1/°K]	ymin ymax [cm]	zmin zmax [cm]	hymin hzmin [cm]	AK AB [m2]	MB	Tau-T Tau-B [1/m3]	Tau-Vy Tau-Vz [1/m2]
1.0E-05	-250.00	-75.00		4.083E+00	100	2.123E-01	2.000E-01
	250.00	75.00		7.500E+00			2.000E-01

Rectangular cross-section/T-beam

H/B [cm]	So/Su [cm]	Aso/u [cm2]	Ho/Bo [cm]	B-eff [cm]
150.00	15.00			57.69
500.00	15.00			

Additional Design Data

M	periphery-O/-I [m2/m] [m2/m]	deff [cm]	t-min [cm]	t-max [cm]	SMP [o/o]	thet-p [tm2/m]	thet-y [tm2/m]	thet-z [tm2/m]	thet-yz [tm2/m]
	13.000	115.38	150.00	500.00	0.0	42.578	3.516	39.062	

Reinforcement global values

Layer	mS	mR	area [cm2]	lower-A [cm2]	upper-A [cm2]	yL [cm]	zL [cm]	L-tors [cm]	N-pr [kN]	M-pr [kNm]
M1	50	100	4.70	0.00		0.00	-15.00	470.00		
M2	50	100	4.70	0.00		0.00	-135.00	470.00		
M3	50	100	2.40	0.00		0.00	-75.00	240.00		

SOFiSTiK AG - www.sofistik.de

Composite bridge 38+50+38, b=14.25m, 2x2HL1100R HISTAR460 , slab 0.30m C30/37

Cross section No. 27 - B/H = 500 / 150 cm

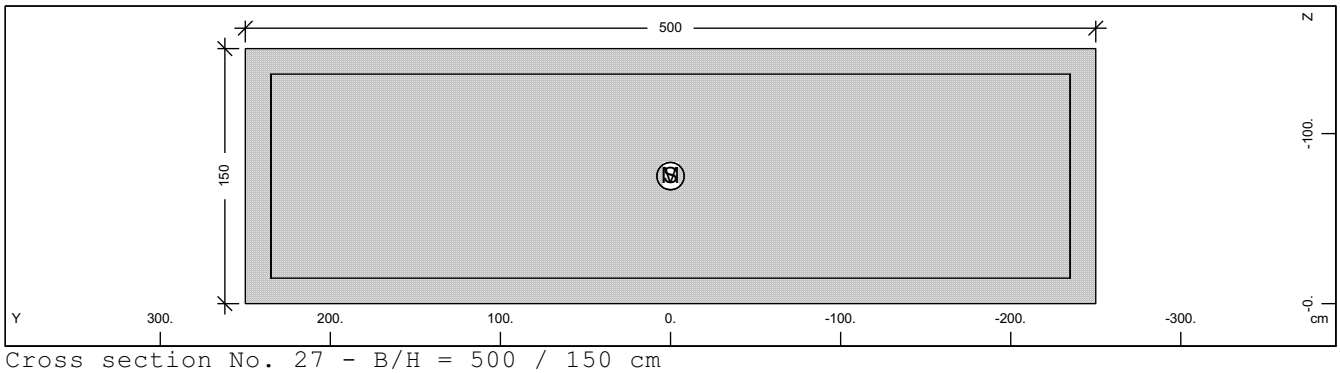

Cross section No. 27 - B/H = 500 / 150 cm

Static properties of cross section

Mat NoR	A[m2] It[m4]	Ay/Az/Ayz [m2]	Iy/Iz/Iyz [m4]	ys/zs [cm]	y/z-sc [cm]	modules [MPa]	gam [kN/m]
50	7.5000E+00		1.406E+00	0.00	0.00	32837	187.50
100	4.539E+00		1.562E+01	-75.00	-75.00	13682	

Additional static properties of cross section

Alfa-T [1/°K]	ymin ymax [cm]	zmin zmax [cm]	hymin hzmin [cm]	AK AB [m2]	MB	Tau-T Tau-B [1/m3]	Tau-Vy Tau-Vz [1/m2]
1.0E-05	-250.00	-75.00		4.083E+00	100	2.123E-01	2.000E-01
	250.00	75.00		7.500E+00			2.000E-01

Rectangular cross-section/T-beam

H/B [cm]	So/Su [cm]	Aso/u [cm2]	Ho/Bo [cm]	B-eff [cm]
150.00	15.00			57.69
500.00	15.00			

Additional Design Data

M	periphery-O/-I [m2/m] [m2/m]	deff [cm]	t-min [cm]	t-max [cm]	SMP [o/o]	thet-p [tm2/m]	thet-y [tm2/m]	thet-z [tm2/m]	thet-yz [tm2/m]
	13.000	115.38	150.00	500.00	0.0	42.578	3.516	39.062	

Reinforcement global values

Layer	mS	mR	area [cm2]	lower-A [cm2]	upper-A [cm2]	yL [cm]	zL [cm]	L-tors [cm]	N-pr [kN]	M-pr [kNm]
M1	50	100	4.70	0.00		0.00	-15.00	470.00		
M2	50	100	4.70	0.00		0.00	-135.00	470.00		
M3	50	100	2.40	0.00		0.00	-75.00	240.00		

SOFiSTiK AG - www.sofistik.de

Composite bridge 38+50+38, b=14.25m, 2x2HL1100R HISTAR460 , slab 0.30m C30/37

Cross section No. 28 - B/H = 500 / 150 cm

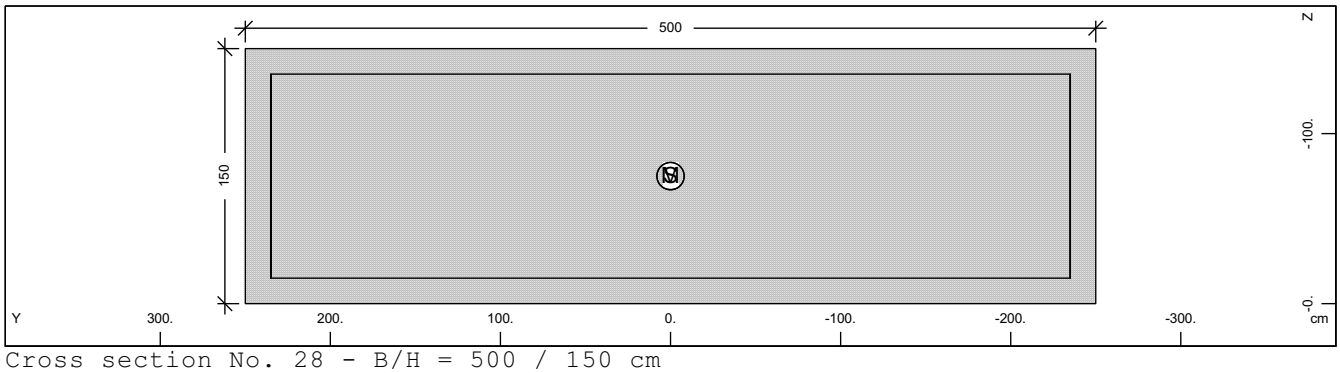

Cross section No. 28 - B/H = 500 / 150 cm

Static properties of cross section

Mat NoR	A[m2] It[m4]	Ay/Az/Ayz [m2]	Iy/Iz/Iyz [m4]	ys/zs [cm]	y/z-sc [cm]	modules [MPa]	gam [kN/m]
50	7.5000E+00		1.406E+00	0.00	0.00	32837	187.50
100	4.539E+00		1.562E+01	-75.00	-75.00	13682	

Additional static properties of cross section

Alfa-T [1/°K]	ymin ymax [cm]	zmin zmax [cm]	hymin hzmin [cm]	AK AB [m2]	MB	Tau-T Tau-B [1/m3]	Tau-Vy Tau-Vz [1/m2]
1.0E-05	-250.00	-75.00		4.083E+00	100	2.123E-01	2.000E-01
	250.00	75.00		7.500E+00			2.000E-01

Rectangular cross-section/T-beam

H/B [cm]	So/Su [cm]	Aso/u [cm2]	Ho/Bo [cm]	B-eff [cm]
150.00	15.00			57.69
500.00	15.00			

Additional Design Data

M	periphery-O/-I [m2/m] [m2/m]	deff [cm]	t-min [cm]	t-max [cm]	SMP [o/o]	thet-p [tm2/m]	thet-y [tm2/m]	thet-z [tm2/m]	thet-yz [tm2/m]
	13.000	115.38	150.00	500.00	0.0	42.578	3.516	39.062	

Reinforcement global values

Layer	mS	mR	area [cm2]	lower-A [cm2]	upper-A [cm2]	yL [cm]	zL [cm]	L-tors [cm]	N-pr [kN]	M-pr [kNm]
M1	50	100	4.70	0.00		0.00	-15.00	470.00		
M2	50	100	4.70	0.00		0.00	-135.00	470.00		
M3	50	100	2.40	0.00		0.00	-75.00	240.00		

SOFiSTiK AG - www.sofistik.de

Composite bridge 38+50+38, b=14.25m, 2x2HL1100R HISTAR460 , slab 0.30m C30/37

Cross section No. 29 - B/H = 500 / 150 cm

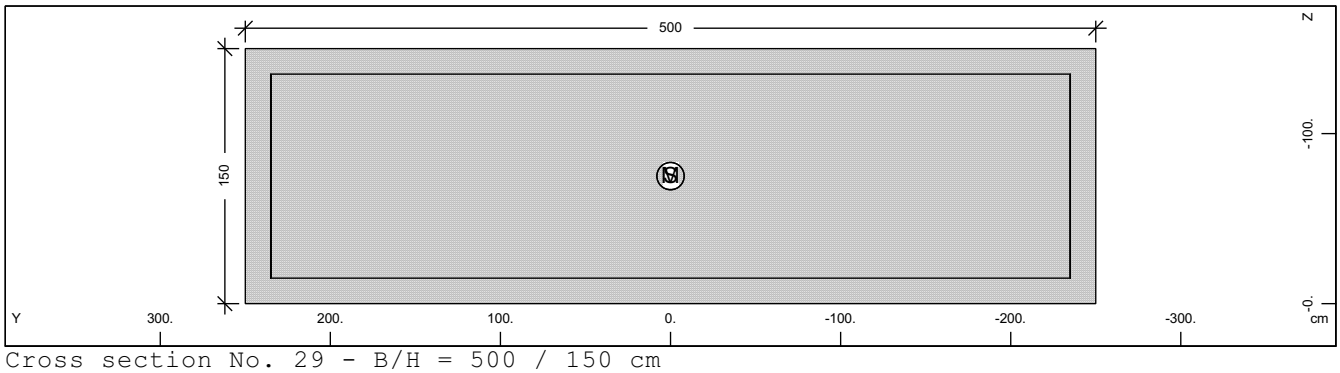

Cross section No. 29 - B/H = 500 / 150 cm

Static properties of cross section

Mat NoR	A[m2] It[m4]	Ay/Az/Ayz [m2]	Iy/Iz/Iyz [m4]	ys/zs [cm]	y/z-sc [cm]	modules [MPa]	gam [kN/m]
50	7.5000E+00		1.406E+00	0.00	0.00	32837	187.50
100	4.539E+00		1.562E+01	-75.00	-75.00	13682	

Additional static properties of cross section

Alfa-T [1/°K]	ymin ymax [cm]	zmin zmax [cm]	hymin hzmin [cm]	AK AB [m2]	MB	Tau-T Tau-B [1/m3]	Tau-Vy Tau-Vz [1/m2]
1.0E-05	-250.00	-75.00		4.083E+00	100	2.123E-01	2.000E-01
	250.00	75.00		7.500E+00			2.000E-01

Rectangular cross-section/T-beam

H/B [cm]	So/Su [cm]	Aso/u [cm2]	Ho/Bo [cm]	B-eff [cm]
150.00	15.00			57.69
500.00	15.00			

Additional Design Data

M	periphery-O/-I [m2/m] [m2/m]	deff [cm]	t-min [cm]	t-max [cm]	SMP [o/o]	thet-p [tm2/m]	thet-y [tm2/m]	thet-z [tm2/m]	thet-yz [tm2/m]
	13.000	115.38	150.00	500.00	0.0	42.578	3.516	39.062	

Reinforcement global values

Layer	mS	mR	area [cm2]	lower-A [cm2]	upper-A [cm2]	yL [cm]	zL [cm]	L-tors [cm]	N-pr [kN]	M-pr [kNm]
M1	50	100	4.70	0.00		0.00	-15.00	470.00		
M2	50	100	4.70	0.00		0.00	-135.00	470.00		
M3	50	100	2.40	0.00		0.00	-75.00	240.00		

SOFiSTiK AG - www.sofistik.de

Composite bridge 38+50+38, b=14.25m, 2x2HL1100R HISTAR460 , slab 0.30m C30/37

Cross section No. 30 - B/H = 400 / 160 cm

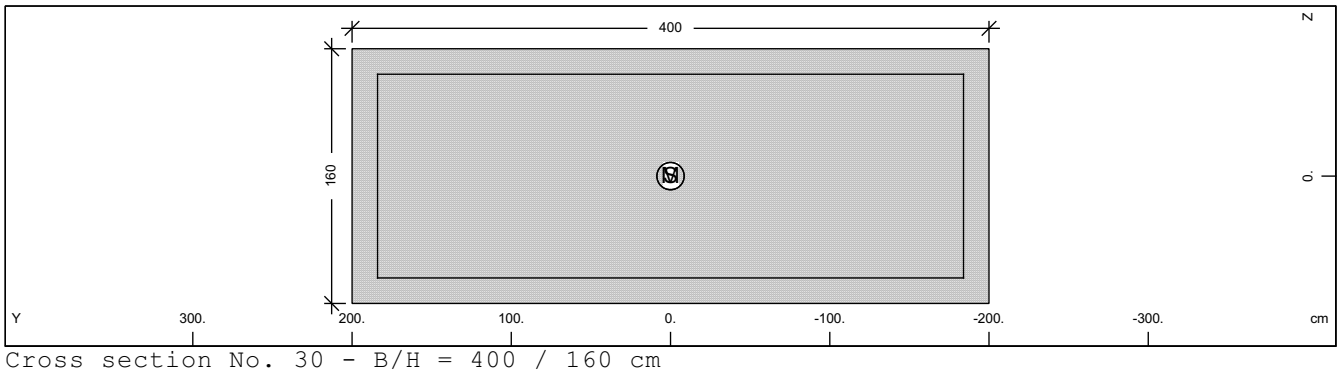

Cross section No. 30 - B/H = 400 / 160 cm

Static properties of cross section

Mat NoR	A[m2] It[m4]	Ay/Az/Ayz [m2]	Iy/Iz/Iyz [m4]	ys/zs [cm]	y/z-sc [cm]	modules [MPa]	gam [kN/m]
50	6.4000E+00		1.365E+00	0.00	0.00	32837	160.00
100	4.030E+00		8.533E+00	0.00	0.00	13682	

Additional static properties of cross section

Alfa-T [1/°K]	ymin ymax [cm]	zmin zmax [cm]	hymin hzmin [cm]	AK AB [m2]	MB	Tau-T Tau-B [1/m3]	Tau-Vy Tau-Vz [1/m2]
1.0E-05	-200.00	-80.00		3.527E+00	100	2.481E-01	2.344E-01
	200.00	80.00		6.400E+00			2.344E-01

Rectangular cross-section/T-beam

H/B [cm]	So/Su [cm]	Aso/u [cm2]	Ho/Bo [cm]	B-eff [cm]
160.00	16.00			57.14
400.00	16.00			

Additional Design Data

M	periphery-O/-I [m2/m] [m2/m]	deff [cm]	t-min [cm]	t-max [cm]	SMP [o/o]	thet-p [tm2/m]	thet-y [tm2/m]	thet-z [tm2/m]	thet-yz [tm2/m]
	11.200	114.29	160.00	400.00	0.0	24.747	3.413	21.333	

Reinforcement global values

Layer	mS	mR	area [cm2]	lower-A [cm2]	upper-A [cm2]	yL [cm]	zL [cm]	L-tors [cm]	N-pr [kN]	M-pr [kNm]
M1	50	100	3.68	0.00		0.00	64.00	368.00		
M2	50	100	3.68	0.00		0.00	-64.00	368.00		
M3	50	100	2.56	0.00		0.00	0.00	256.00		

SOFiSTiK AG - www.sofistik.de

Composite bridge 38+50+38, b=14.25m, 2x2HL1100R HISTAR460 , slab 0.30m C30/37

Cross section No. 31 - B/H = 10 / 10 cm

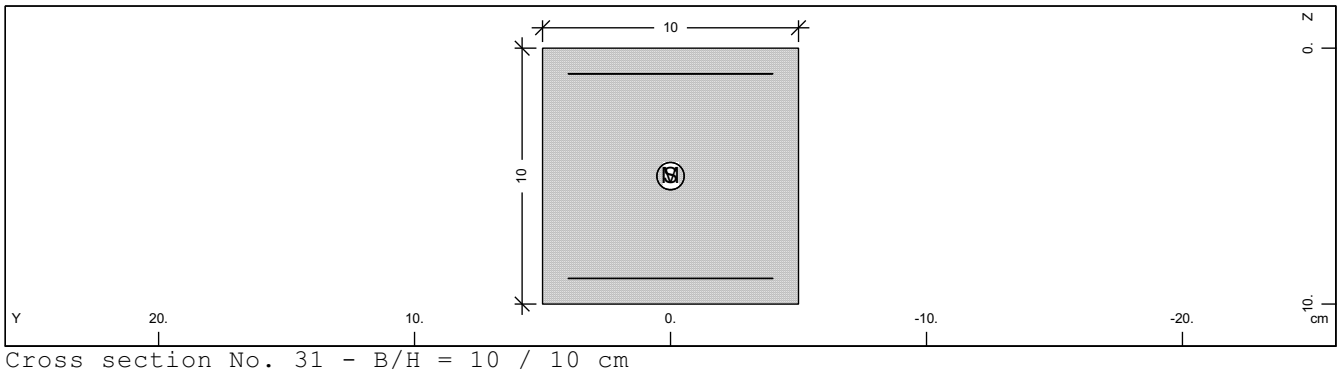

Cross section No. 31 - B/H = 10 / 10 cm

Static properties of cross section

Mat NoR	A[m2] It[m4]	Ay/Az/Ayz [m2]	Iy/Iz/Iyz [m4]	ys/zs [cm]	y/z-sc [cm]	modules [MPa]	gam [kN/m]
50	1.0000E-02		8.333E-06	0.00	0.00	32837	0.25
100	1.400E-05		8.333E-06	5.00	5.00	13682	

Additional static properties of cross section

Alfa-T [1/°K]	ymin ymax [cm]	zmin zmax [cm]	hymin hzmin [cm]	AK AB [m2]	MB	Tau-T Tau-B [1/m3]	Tau-Vy Tau-Vz [1/m2]
1.0E-05	-5.00	-5.00		5.625E-03	100	3.556E+03	1.500E+02
	5.00	5.00		1.000E-02			1.500E+02

Rectangular cross-section/T-beam

H/B [cm]	So/Su [cm]	Aso/u [cm2]	Ho/Bo [cm]	B-eff [cm]
10.00	1.00			2.50
10.00	1.00			

Additional Design Data

M	periphery-O/-I [m2/m] [m2/m]	deff [cm]	t-min [cm]	t-max [cm]	SMP [o/o]	thet-p [tm2/m]	thet-y [tm2/m]	thet-z [tm2/m]	thet-yz [tm2/m]
	0.400	5.00	10.00	10.00	0.0	0.000	0.000	0.000	

Reinforcement global values

Layer	mS	mR	area [cm2]	lower-A [cm2]	upper-A [cm2]	yL [cm]	zL [cm]	L-tors [cm]	N-pr [kN]	M-pr [kNm]
M1	50	100	0.08	0.00		0.00	9.00	16.00		
M2	50	100	0.08	0.00		0.00	1.00	16.00		

Cross section No. 32 - B/H = 10 / 10 cm

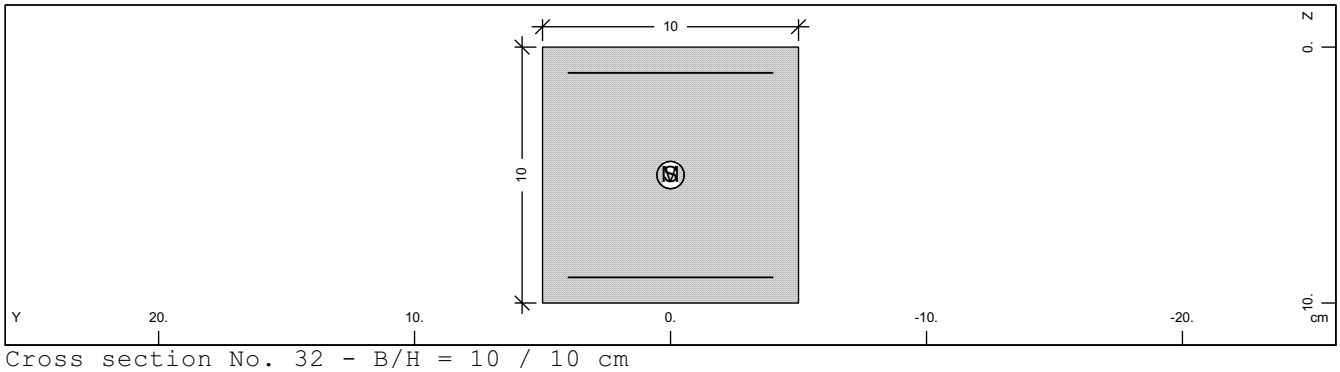

Cross section No. 32 - B/H = 10 / 10 cm

SOFiSTiK AG - www.sofistik.de

Composite bridge 38+50+38, b=14.25m, 2x2HL1100R HISTAR460 , slab 0.30m C30/37

Static properties of cross section

Mat NoR	A[m2] It[m4]	Ay/Az/Ayz [m2]	Iy/Iz/Iyz [m4]	ys/zs [cm]	y/z-sc [cm]	modules [MPa]	gam [kN/m]
50	1.0000E-02		8.333E-06	0.00	0.00	32837	0.25
100	1.400E-05		8.333E-06	5.00	5.00	13682	

Additional static properties of cross section

Alfa-T [1/°K]	ymin ymax [cm]	zmin zmax [cm]	hymin hzmin [cm]	AK AB [m2]	MB	Tau-T Tau-B [1/m3]	Tau-Vy Tau-Vz [1/m2]
1.0E-05	-5.00	-5.00		5.625E-03	100	3.556E+03	1.500E+02
	5.00	5.00		1.000E-02			1.500E+02

Rectangular cross-section/T-beam

H/B [cm]	So/Su [cm]	Aso/u [cm2]	Ho/Bo [cm]	B-eff [cm]
10.00	1.00			2.50
10.00	1.00			

Additional Design Data

M	periphery-O/-I [m2/m] [m2/m]	deff [cm]	t-min [cm]	t-max [cm]	SMP [o/o]	thet-p [tm2/m]	thet-y [tm2/m]	thet-z [tm2/m]	thet-yz [tm2/m]
	0.400	5.00	10.00	10.00	0.0	0.000	0.000	0.000	

Reinforcement global values

Layer	mS	mR	area [cm2]	lower-A [cm2]	upper-A [cm2]	yL [cm]	zL [cm]	L-tors [cm]	N-pr [kN]	M-pr [kNm]
M1	50	100	0.08	0.00		0.00	9.00	16.00		
M2	50	100	0.08	0.00		0.00	1.00	16.00		

Cross section No. 33 - B/H = 10 / 10 cm

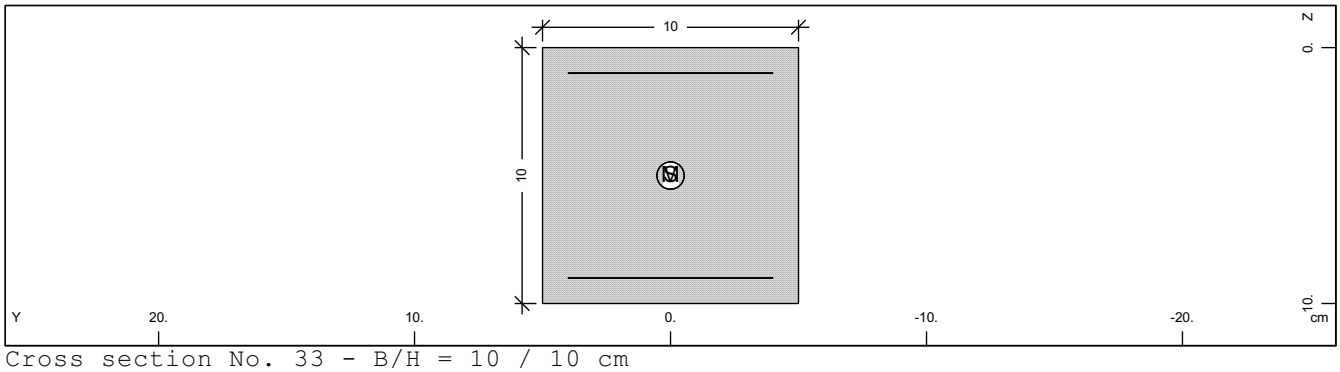

Cross section No. 33 - B/H = 10 / 10 cm

Static properties of cross section

Mat NoR	A[m2] It[m4]	Ay/Az/Ayz [m2]	Iy/Iz/Iyz [m4]	ys/zs [cm]	y/z-sc [cm]	modules [MPa]	gam [kN/m]
50	1.0000E-02		8.333E-06	0.00	0.00	32837	0.25
100	1.400E-05		8.333E-06	5.00	5.00	13682	

Additional static properties of cross section

Alfa-T [1/°K]	ymin ymax [cm]	zmin zmax [cm]	hymin hzmin [cm]	AK AB [m2]	MB	Tau-T Tau-B [1/m3]	Tau-Vy Tau-Vz [1/m2]
1.0E-05	-5.00	-5.00		5.625E-03	100	3.556E+03	1.500E+02
	5.00	5.00		1.000E-02			1.500E+02

Rectangular cross-section/T-beam

H/B [cm]	So/Su [cm]	Aso/u [cm2]	Ho/Bo [cm]	B-eff [cm]
10.00	1.00			2.50
10.00	1.00			

SOFiSTiK AG - www.sofistik.de

Composite bridge 38+50+38, b=14.25m, 2x2HL1100R HISTAR460 , slab 0.30m C30/37

Additional Design Data

M	periphery-O/-I [m2/m]	[m2/m]	deff [cm]	t-min [cm]	t-max [cm]	SMP [o/o]	thet-p [tm2/m]	thet-y [tm2/m]	thet-z [tm2/m]	thet-yz [tm2/m]
	0.400		5.00	10.00	10.00	0.0	0.000	0.000	0.000	

Reinforcement global values

Layer	mS	mR	area [cm2]	lower-A [cm2]	upper-A [cm2]	yL [cm]	zL [cm]	L-tors [cm]	N-pr [kN]	M-pr [kNm]
M1	50	100	0.08	0.00		0.00	9.00	16.00		
M2	50	100	0.08	0.00		0.00	1.00	16.00		

Cross section No. 34 - B/H = 10 / 10 cm

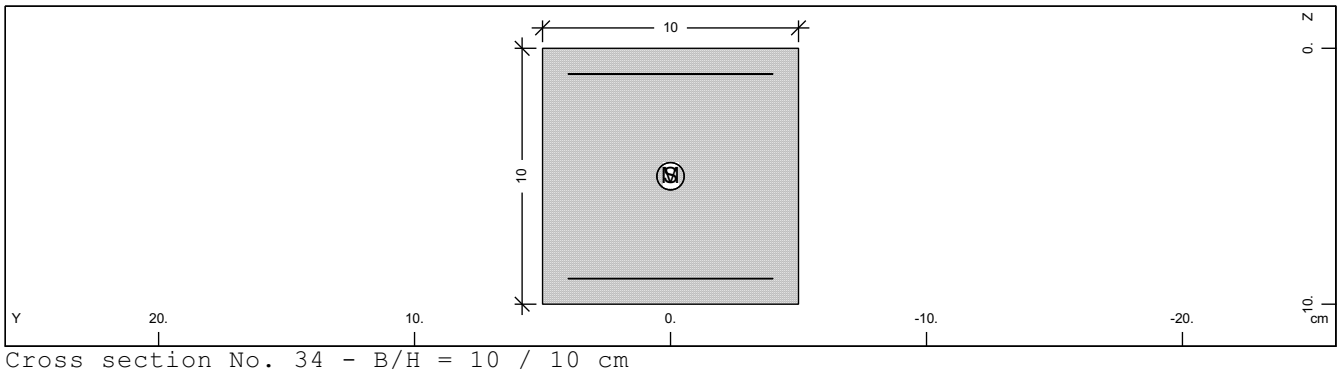

Cross section No. 34 - B/H = 10 / 10 cm

Static properties of cross section

Mat NoR	A[m2] It[m4]	Ay/Az/Ayz [m2]	Iy/Iz/Iyz [m4]	ys/zs [cm]	y/z-sc [cm]	modules [MPa]	gam [kN/m]
50	1.0000E-02		8.333E-06	0.00	0.00	32837	0.25
100	1.400E-05		8.333E-06	5.00	5.00	13682	

Additional static properties of cross section

Alfa-T [1/°K]	ymin / ymax [cm]	zmin / zmax [cm]	hymin / hzmin [cm]	AK / AB [m2]	MB	Tau-T / Tau-B [1/m3]	Tau-Vy / Tau-Vz [1/m2]
1.0E-05	-5.00	-5.00		5.625E-03	100	3.556E+03	1.500E+02
	5.00	5.00		1.000E-02			1.500E+02

Rectangular cross-section/T-beam

H/B [cm]	So/Su [cm]	Aso/u [cm2]	Ho/Bo [cm]	B-eff [cm]
10.00	1.00			2.50
10.00	1.00			

Additional Design Data

M	periphery-O/-I [m2/m]	[m2/m]	deff [cm]	t-min [cm]	t-max [cm]	SMP [o/o]	thet-p [tm2/m]	thet-y [tm2/m]	thet-z [tm2/m]	thet-yz [tm2/m]
	0.400		5.00	10.00	10.00	0.0	0.000	0.000	0.000	

Reinforcement global values

Layer	mS	mR	area [cm2]	lower-A [cm2]	upper-A [cm2]	yL [cm]	zL [cm]	L-tors [cm]	N-pr [kN]	M-pr [kNm]
M1	50	100	0.08	0.00		0.00	9.00	16.00		
M2	50	100	0.08	0.00		0.00	1.00	16.00		

SOFiSTiK AG - www.sofistik.de

Composite bridge 38+50+38, b=14.25m, 2x2HL1100R HISTAR460 , slab 0.30m C30/37

Cross section No. 35 - B/H = 10 / 10 cm

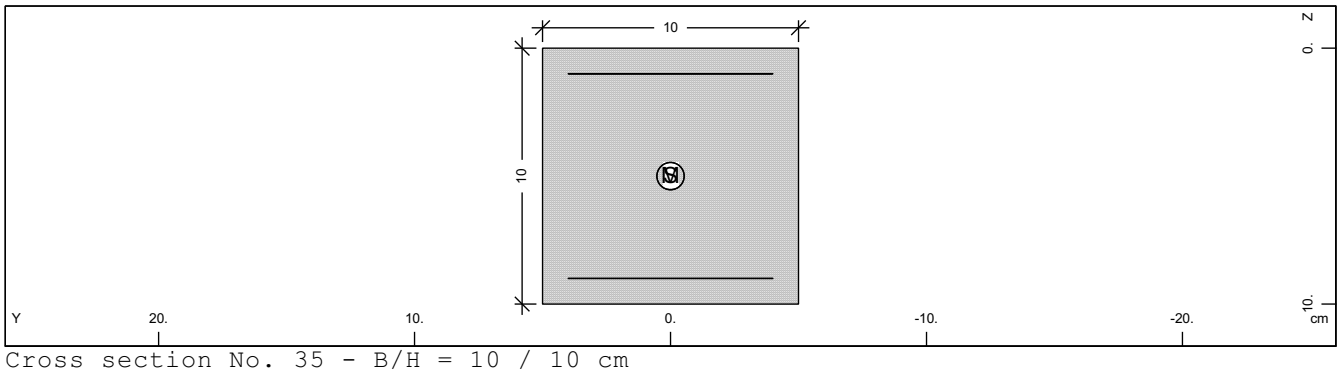

Cross section No. 35 - B/H = 10 / 10 cm

Static properties of cross section

Mat NoR	A[m2] It[m4]	Ay/Az/Ayz [m2]	Iy/Iz/Iyz [m4]	ys/zs [cm]	y/z-sc [cm]	modules [MPa]	gam [kN/m]
50	1.0000E-02		8.333E-06	0.00	0.00	32837	0.25
100	1.400E-05		8.333E-06	5.00	5.00	13682	

Additional static properties of cross section

Alfa-T [1/°K]	ymin ymax [cm]	zmin zmax [cm]	hymin hzmin [cm]	AK AB [m2]	MB	Tau-T Tau-B [1/m3]	Tau-Vy Tau-Vz [1/m2]
1.0E-05	-5.00	-5.00		5.625E-03	100	3.556E+03	1.500E+02
	5.00	5.00		1.000E-02			1.500E+02

Rectangular cross-section/T-beam

H/B [cm]	So/Su [cm]	Aso/u [cm2]	Ho/Bo [cm]	B-eff [cm]
10.00	1.00			2.50
10.00	1.00			

Additional Design Data

M	periphery-O/-I [m2/m] [m2/m]	deff [cm]	t-min [cm]	t-max [cm]	SMP [o/o]	thet-p [tm2/m]	thet-y [tm2/m]	thet-z [tm2/m]	thet-yz [tm2/m]
	0.400	5.00	10.00	10.00	0.0	0.000	0.000	0.000	

Reinforcement global values

Layer	mS	mR	area [cm2]	lower-A [cm2]	upper-A [cm2]	yL [cm]	zL [cm]	L-tors [cm]	N-pr [kN]	M-pr [kNm]
M1	50	100	0.08	0.00		0.00	9.00	16.00		
M2	50	100	0.08	0.00		0.00	1.00	16.00		

Cross section No. 36 - B/H = 10 / 10 cm

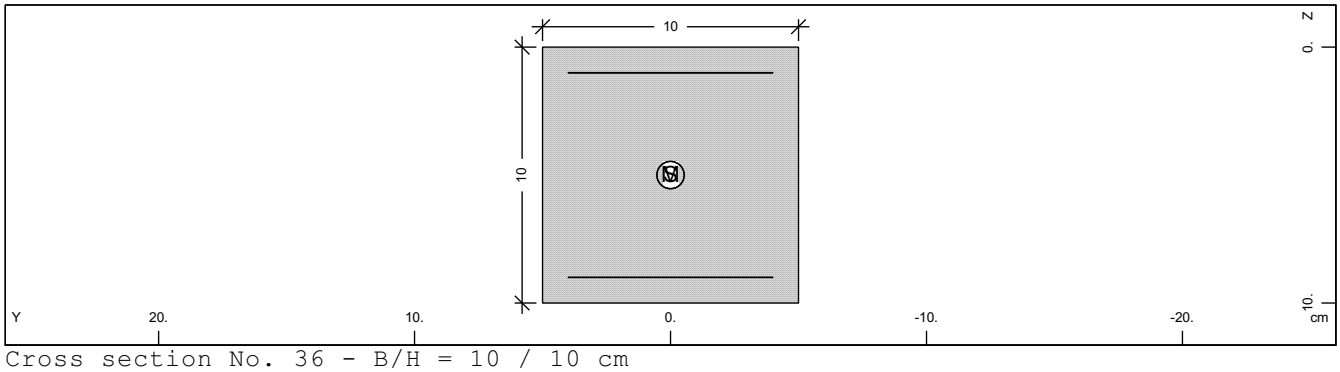

Cross section No. 36 - B/H = 10 / 10 cm

SOFiSTiK AG - www.sofistik.de

Composite bridge 38+50+38, b=14.25m, 2x2HL1100R HISTAR460 , slab 0.30m C30/37

Static properties of cross section

Mat NoR	A[m2] It[m4]	Ay/Az/Ayz [m2]	Iy/Iz/Iyz [m4]	ys/zs [cm]	y/z-sc [cm]	modules [MPa]	gam [kN/m]
50	1.0000E-02		8.333E-06	0.00	0.00	32837	0.25
100	1.400E-05		8.333E-06	5.00	5.00	13682	

Additional static properties of cross section

Alfa-T [1/°K]	ymin ymax [cm]	zmin zmax [cm]	hymin hzmin [cm]	AK AB [m2]	MB	Tau-T Tau-B [1/m3]	Tau-Vy Tau-Vz [1/m2]
1.0E-05	-5.00	-5.00		5.625E-03	100	3.556E+03	1.500E+02
	5.00	5.00		1.000E-02			1.500E+02

Rectangular cross-section/T-beam

H/B [cm]	So/Su [cm]	Aso/u [cm2]	Ho/Bo [cm]	B-eff [cm]
10.00	1.00			2.50
10.00	1.00			

Additional Design Data

M	periphery-O/-I [m2/m] [m2/m]	deff [cm]	t-min [cm]	t-max [cm]	SMP [o/o]	thet-p [tm2/m]	thet-y [tm2/m]	thet-z [tm2/m]	thet-yz [tm2/m]
	0.400	5.00	10.00	10.00	0.0	0.000	0.000	0.000	

Reinforcement global values

Layer	mS	mR	area [cm2]	lower-A [cm2]	upper-A [cm2]	yL [cm]	zL [cm]	L-tors [cm]	N-pr [kN]	M-pr [kNm]
M1	50	100	0.08	0.00		0.00	9.00	16.00		
M2	50	100	0.08	0.00		0.00	1.00	16.00		

Cross section No. 37 - B/H = 10 / 10 cm

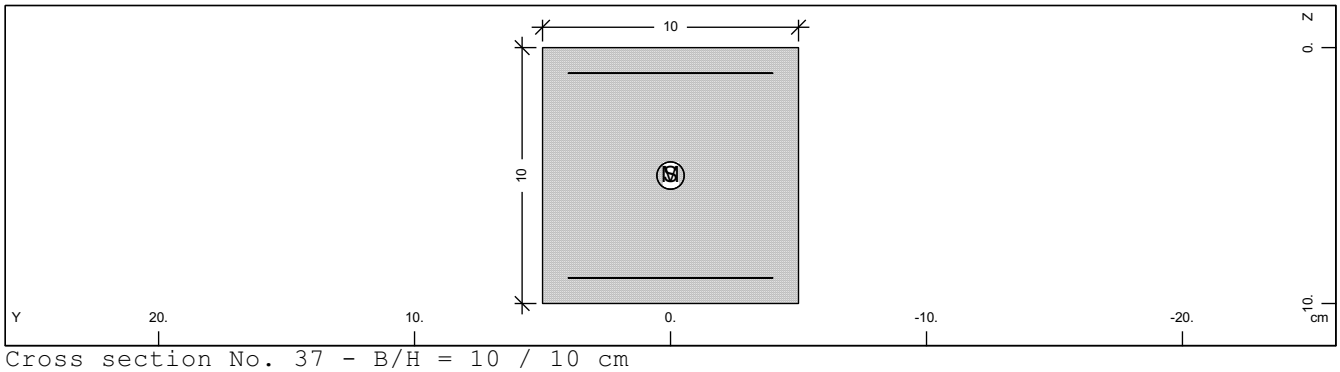

Cross section No. 37 - B/H = 10 / 10 cm

Static properties of cross section

Mat NoR	A[m2] It[m4]	Ay/Az/Ayz [m2]	Iy/Iz/Iyz [m4]	ys/zs [cm]	y/z-sc [cm]	modules [MPa]	gam [kN/m]
50	1.0000E-02		8.333E-06	0.00	0.00	32837	0.25
100	1.400E-05		8.333E-06	5.00	5.00	13682	

Additional static properties of cross section

Alfa-T [1/°K]	ymin ymax [cm]	zmin zmax [cm]	hymin hzmin [cm]	AK AB [m2]	MB	Tau-T Tau-B [1/m3]	Tau-Vy Tau-Vz [1/m2]
1.0E-05	-5.00	-5.00		5.625E-03	100	3.556E+03	1.500E+02
	5.00	5.00		1.000E-02			1.500E+02

Rectangular cross-section/T-beam

H/B [cm]	So/Su [cm]	Aso/u [cm2]	Ho/Bo [cm]	B-eff [cm]
10.00	1.00			2.50
10.00	1.00			

SOFiSTiK AG - www.sofistik.de

Composite bridge 38+50+38, b=14.25m, 2x2HL1100R HISTAR460 , slab 0.30m C30/37

Additional Design Data

M	periphery-O/-I [m2/m]	[m2/m]	deff [cm]	t-min [cm]	t-max [cm]	SMP [o/o]	thet-p [tm2/m]	thet-y [tm2/m]	thet-z [tm2/m]	thet-yz [tm2/m]
	0.400		5.00	10.00	10.00	0.0	0.000	0.000	0.000	

Reinforcement global values

Layer	mS	mR	area [cm2]	lower-A [cm2]	upper-A [cm2]	yL [cm]	zL [cm]	L-tors [cm]	N-pr [kN]	M-pr [kNm]
M1	50	100	0.08	0.00		0.00	9.00	16.00		
M2	50	100	0.08	0.00		0.00	1.00	16.00		

Cross section No. 38 - B/H = 10 / 10 cm

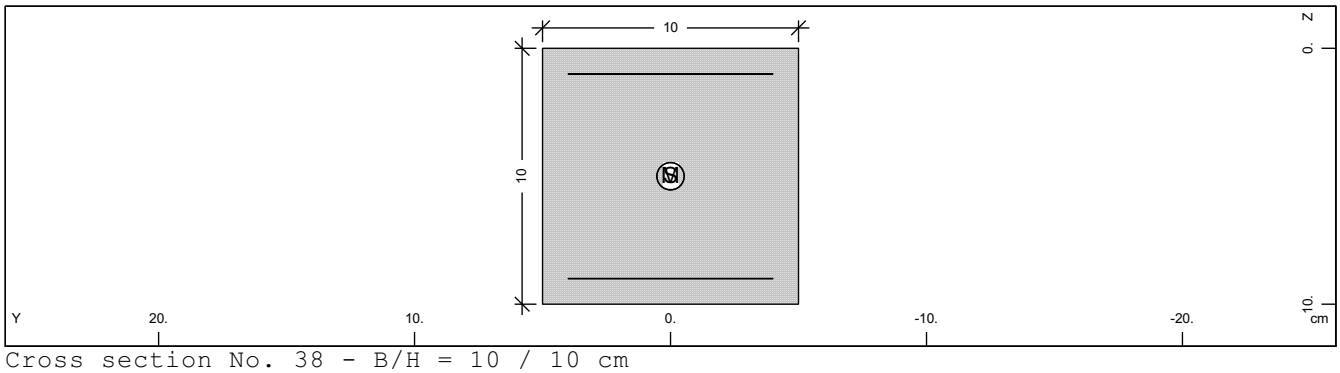

Cross section No. 38 - B/H = 10 / 10 cm

Static properties of cross section

Mat NoR	A[m2] It[m4]	Ay/Az/Ayz [m2]	Iy/Iz/Iyz [m4]	ys/zs [cm]	y/z-sc [cm]	modules [MPa]	gam [kN/m]
50	1.0000E-02		8.333E-06	0.00	0.00	32837	0.25
100	1.400E-05		8.333E-06	5.00	5.00	13682	

Additional static properties of cross section

Alfa-T [1/°K]	ymin ymax [cm]	zmin zmax [cm]	hymin hzmin [cm]	AK AB [m2]	MB	Tau-T Tau-B [1/m3]	Tau-Vy Tau-Vz [1/m2]
1.0E-05	-5.00	-5.00		5.625E-03	100	3.556E+03	1.500E+02
	5.00	5.00		1.000E-02			1.500E+02

Rectangular cross-section/T-beam

H/B [cm]	So/Su [cm]	Aso/u [cm2]	Ho/Bo [cm]	B-eff [cm]
10.00	1.00			2.50
10.00	1.00			

Additional Design Data

M	periphery-O/-I [m2/m]	[m2/m]	deff [cm]	t-min [cm]	t-max [cm]	SMP [o/o]	thet-p [tm2/m]	thet-y [tm2/m]	thet-z [tm2/m]	thet-yz [tm2/m]
	0.400		5.00	10.00	10.00	0.0	0.000	0.000	0.000	

Reinforcement global values

Layer	mS	mR	area [cm2]	lower-A [cm2]	upper-A [cm2]	yL [cm]	zL [cm]	L-tors [cm]	N-pr [kN]	M-pr [kNm]
M1	50	100	0.08	0.00		0.00	9.00	16.00		
M2	50	100	0.08	0.00		0.00	1.00	16.00		

SOFiSTiK AG - www.sofistik.de

Composite bridge 38+50+38, b=14.25m, 2x2HL1100R HISTAR460 , slab 0.30m C30/37

Cross section No. 39 - B/H = 10 / 10 cm

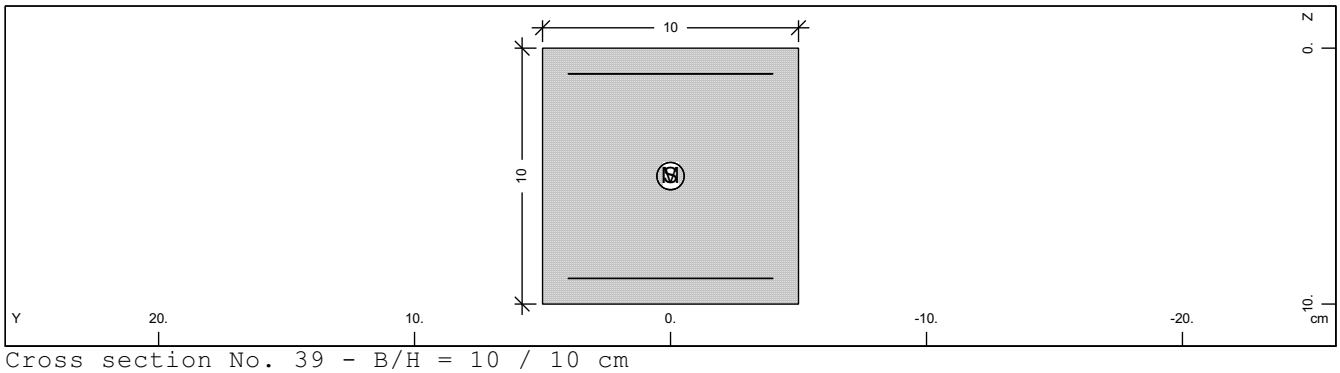

Cross section No. 39 - B/H = 10 / 10 cm

Static properties of cross section

Mat NoR	A[m2] It[m4]	Ay/Az/Ayz [m2]	Iy/Iz/Iyz [m4]	ys/zs [cm]	y/z-sc [cm]	modules [MPa]	gam [kN/m]
50	1.0000E-02		8.333E-06	0.00	0.00	32837	0.25
100	1.400E-05		8.333E-06	5.00	5.00	13682	

Additional static properties of cross section

Alfa-T [1/°K]	ymin ymax [cm]	zmin zmax [cm]	hymin hzmin [cm]	AK AB [m2]	MB	Tau-T Tau-B [1/m3]	Tau-Vy Tau-Vz [1/m2]
1.0E-05	-5.00	-5.00		5.625E-03	100	3.556E+03	1.500E+02
	5.00	5.00		1.000E-02			1.500E+02

Rectangular cross-section/T-beam

H/B [cm]	So/Su [cm]	Aso/u [cm2]	Ho/Bo [cm]	B-eff [cm]
10.00	1.00			2.50
10.00	1.00			

Additional Design Data

M	periphery-O/-I [m2/m] [m2/m]	deff [cm]	t-min [cm]	t-max [cm]	SMP [o/o]	thet-p [tm2/m]	thet-y [tm2/m]	thet-z [tm2/m]	thet-yz [tm2/m]
	0.400	5.00	10.00	10.00	0.0	0.000	0.000	0.000	

Reinforcement global values

Layer	mS	mR	area [cm2]	lower-A [cm2]	upper-A [cm2]	yL [cm]	zL [cm]	L-tors [cm]	N-pr [kN]	M-pr [kNm]
M1	50	100	0.08	0.00		0.00	9.00	16.00		
M2	50	100	0.08	0.00		0.00	1.00	16.00		

Cross section No. 41 - HL 1100 R

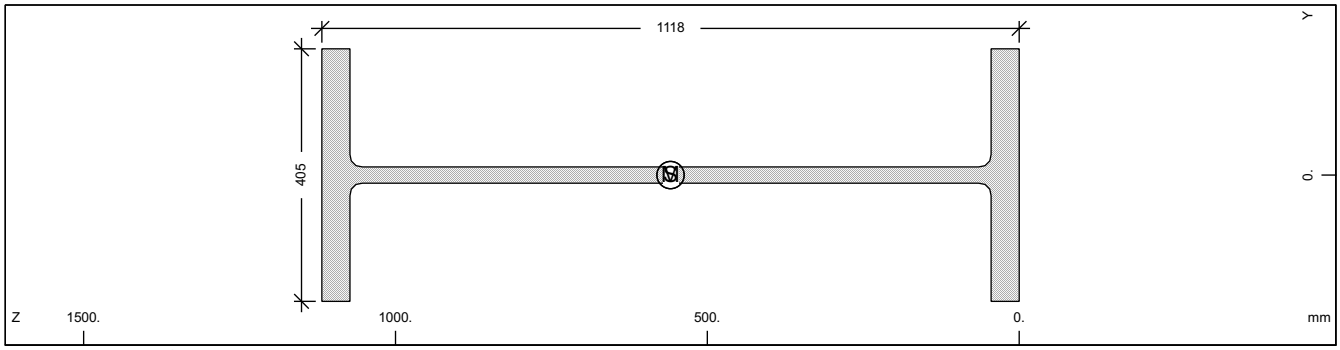

Cross section No. 41 - HL 1100 R

SOFiSTiK AG - www.sofistik.de

Composite bridge 38+50+38, b=14.25m, 2x2HL1100R HISTAR460 , slab 0.30m C30/37

Static properties of cross section

Mat NoR	A[cm2] It[cm4]	Ay/Az/Ayz [cm2]	Iy/Iz/Iyz [cm4]	ys/zs [mm]	y/z-sc [mm]	modules [N/mm2]	gam [kN/m]
1	635.21		1294057.2	0.0	0.0	210000	4.99
	2677.5		49984.4	559.0	559.0	80769	

Additional static properties of cross section

Alfa-T	ymin ymax	zmin zmax	hymin hzmin	AK AB	MB	Tau-T Tau-B	Tau-Vy Tau-Vz
[1/°K]	[mm]	[mm]	[mm]	[cm2]		[1/m3]	[1/m2]
1.2E-05	-202.5	-559.0		3.204E+02		1.681E+03	4.085E+01
	202.5	559.0					3.953E+01

Section values for warping

Wmin[cm2]	Wmax[cm2]	CM[cm6]	CMS[cm4]	ASwyy[cm6]	ASwzz[cm6]	ry[mm]	rz[mm]
-1086.41	1086.41	0.00	0.0	0.00	0.00	0.0	0.0

Design values of cross section

Mat NoR	A[cm2] It[cm4]	Ay/Az/Ayz [cm2]	Iy/Iz/Iyz [cm4]	ys/zs [mm]	modules [N/mm2]	gam [kN/m]
1	635.21		1294057.2	0.0	182609	4.99
	2677.5		49984.4	559.0	70234	

Design forces and moments
(C/E = characteristic plastic/elastic, D=plast.Design, F=elast. Design)

	N[kN]	Vy[kN]	Vz[kN]	Mt[kNm]	My[kNm]	Mz[kNm]	y[mm]	z[mm]	BUCK
C	21279.7	7049.88	5810.37	245.55	8910.82	1296.56	0.0	559.0	b c
C	0.0				0.00	0.00	0.0	0.0	COMB
E	21279.7	2433.78	3974.72	4650.34	7755.08	826.90	0.0	559.0	
D	18504.1	6130.33	5052.50	213.52	7748.54	1127.44	0.0	559.0	
D	0.0				0.00	0.00	0.0	0.0	COMB
F	18504.1	2116.33	3456.28	4043.78	6743.55	719.05	0.0	559.0	

Additional Design Data

M	periphery-O/-I [m2/m] [m2/m]	deff [mm]	t-min [mm]	t-max [mm]	SMP [o/o]	thet-p [tm2/m]	thet-y [tm2/m]	thet-z [tm2/m]	thet-yz [tm2/m]
	3.771		26.0	45.0	0.0	0.106	0.102	0.004	0.000

Rolled steel	D[mm]	B[mm]	s[mm]	t[mm]	r[mm]	yr[mm]	zr[mm]	[grd]
HL 1100. -18.	1118.0	405.0	26.0	45.0	20.0			

Windcoefficients depending on the angle of attack

alpha [°]	cw-y [-]	cw-z [-]	cw-t [-]	Ref	c-lat [-]	Strouhal [-]	a-gallop [-]
-180.00	-2.000	0.000	0.000	BH	0.800	0.110	5.091
-135.00	-1.800	-1.200	0.000	BH	0.800	0.110	5.091
-90.00	0.000	-1.600	0.000	BH	0.800	0.110	5.091
-45.00	1.800	-1.200	0.000	BH	0.800	0.110	5.091
0.00	2.000	0.000	0.000	BH	0.800	0.110	5.091
45.00	1.800	1.200	0.000	BH	0.800	0.110	5.091
90.00	0.000	1.600	0.000	BH	0.800	0.110	5.091
135.00	-1.800	1.200	0.000	BH	0.800	0.110	5.091
180.00	-2.000	0.000	0.000	BH	0.800	0.110	5.091

SOFiSTiK AG - www.sofistik.de

Composite bridge 38+50+38, b=14.25m, 2x2HL1100R HISTAR460 , slab 0.30m C30/37

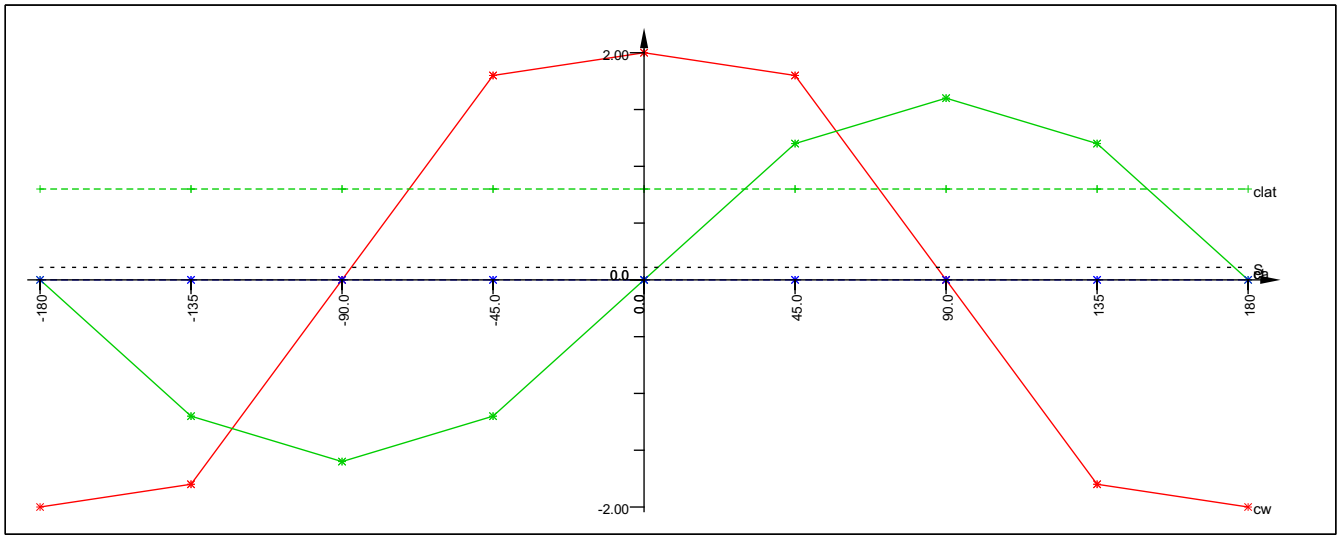

Cross section No. 42 - HL 1100 R

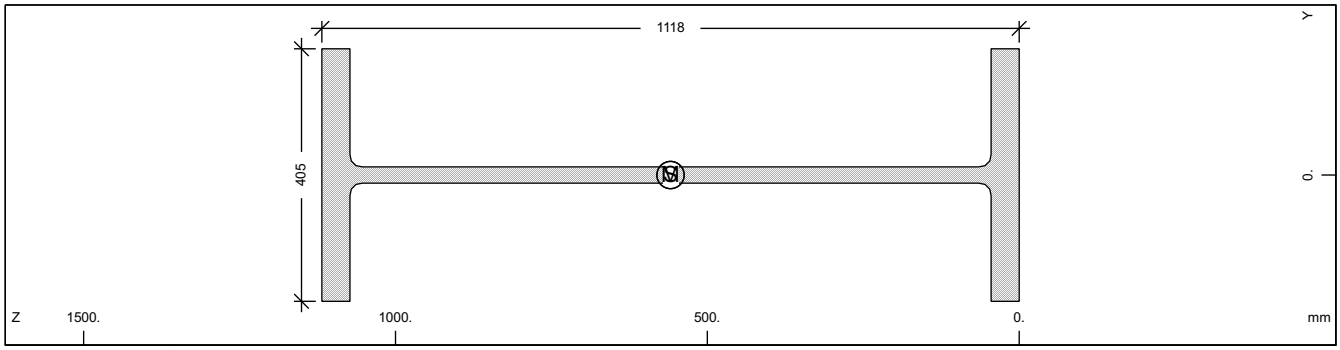

Cross section No. 42 - HL 1100 R

Static properties of cross section

Mat NoR	A[cm2] It[cm4]	Ay/Az/Ayz [cm2]	Iy/Iz/Iyz [cm4]	ys/zs [mm]	y/z-sc [mm]	modules [N/mm2]	gam [kN/m]
1	635.21		1294057.2	0.0	0.0	210000	4.99
	2677.5		49984.4	559.0	559.0	80769	

Additional static properties of cross section

Alfa-T	ymin ymax	zmin zmax	hymin hzmin	AK AB	MB	Tau-T Tau-B	Tau-Vy Tau-Vz
[1/°K]	[mm]	[mm]	[mm]	[cm2]		[1/m3]	[1/m2]
1.2E-05	-202.5	-559.0		3.204E+02		1.681E+03	4.085E+01
	202.5	559.0					3.953E+01

Section values for warping

Wmin[cm2]	Wmax[cm2]	CM[cm6]	CMS[cm4]	ASwyy[cm6]	ASwzz[cm6]	ry[mm]	rz[mm]
-1086.41	1086.41	0.00	0.0	0.00	0.00	0.0	0.0

Design values of cross section

Mat NoR	A[cm2] It[cm4]	Ay/Az/Ayz [cm2]	Iy/Iz/Iyz [cm4]	ys/zs [mm]	modules [N/mm2]	gam [kN/m]
1	635.21		1294057.2	0.0	182609	4.99
	2677.5		49984.4	559.0	70234	

Design forces and moments
(C/E = characteristic plastic/elastic, D=plast.Design, F=elast. Design)

	N[kN]	Vy[kN]	Vz[kN]	Mt[kNm]	My[kNm]	Mz[kNm]	y[mm]	z[mm]	BUCK
C	21279.7	7049.88	5810.37	245.55	8910.82	1296.56	0.0	559.0	b c
C	0.0				0.00	0.00	0.0	0.0	COMB
E	21279.7	2433.78	3974.72	4650.34	7755.08	826.90	0.0	559.0	
D	18504.1	6130.33	5052.50	213.52	7748.54	1127.44	0.0	559.0	
D	0.0				0.00	0.00	0.0	0.0	COMB

SOFiSTiK AG - www.sofistik.de

Composite bridge 38+50+38, b=14.25m, 2x2HL1100R HISTAR460 , slab 0.30m C30/37

Design forces and moments
(C/E = characteristic plastic/elastic, D=plast.Design, F=elast. Design)

	N[kN]	Vy[kN]	Vz[kN]	Mt[kNm]	My[kNm]	Mz[kNm]	y[mm]	z[mm]	BUCK
F	18504.1	2116.33	3456.28	4043.78	6743.55	719.05	0.0	559.0	

Additional Design Data

M	periphery-O/-I [m2/m]	deff [m2/m]	t-min [mm]	t-max [mm]	SMP [o/o]	thet-p [tm2/m]	thet-y [tm2/m]	thet-z [tm2/m]	thet-yz [tm2/m]
	3.771		26.0	45.0	0.0	0.106	0.102	0.004	0.000

Rolled steel	D[mm]	B[mm]	s[mm]	t[mm]	r[mm]	yr[mm]	zr[mm]	[grd]
HL 1100. -18.	1118.0	405.0	26.0	45.0	20.0			

Windcoefficients depending on the angle of attack

alpha [°]	cw-y [-]	cw-z [-]	cw-t [-]	Ref	c-lat [-]	Strouhal [-]	a-gallop [-]
-180.00	-2.000	0.000	0.000	BH	0.800	0.110	5.091
-135.00	-1.800	-1.200	0.000	BH	0.800	0.110	5.091
-90.00	0.000	-1.600	0.000	BH	0.800	0.110	5.091
-45.00	1.800	-1.200	0.000	BH	0.800	0.110	5.091
0.00	2.000	0.000	0.000	BH	0.800	0.110	5.091
45.00	1.800	1.200	0.000	BH	0.800	0.110	5.091
90.00	0.000	1.600	0.000	BH	0.800	0.110	5.091
135.00	-1.800	1.200	0.000	BH	0.800	0.110	5.091
180.00	-2.000	0.000	0.000	BH	0.800	0.110	5.091

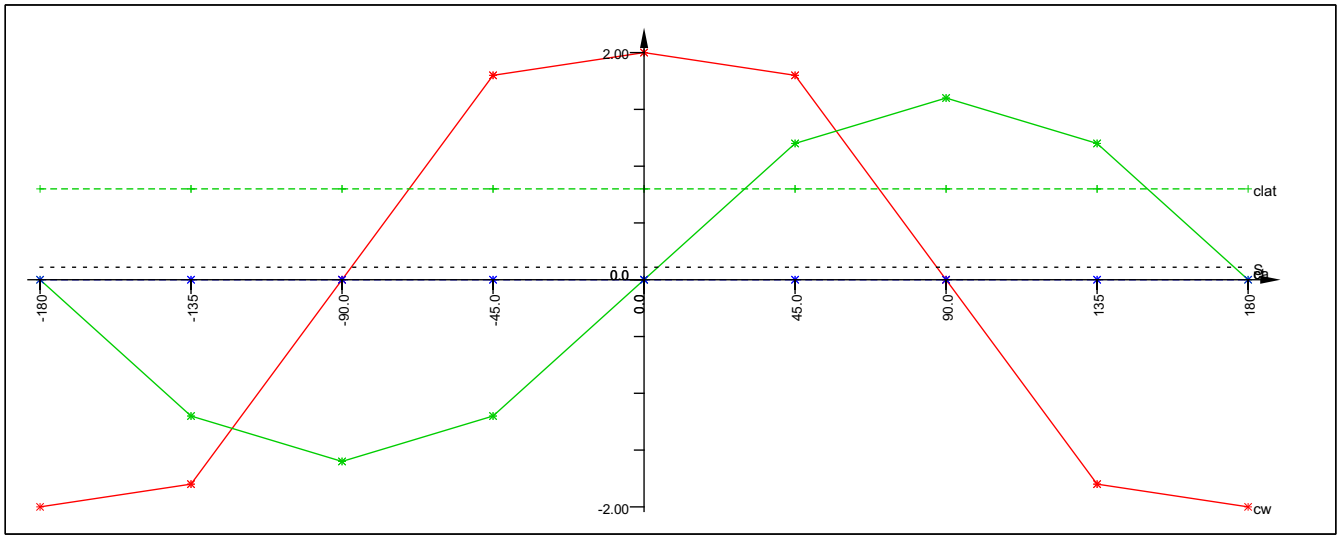

Cross section No. 43 - HL 1100 R

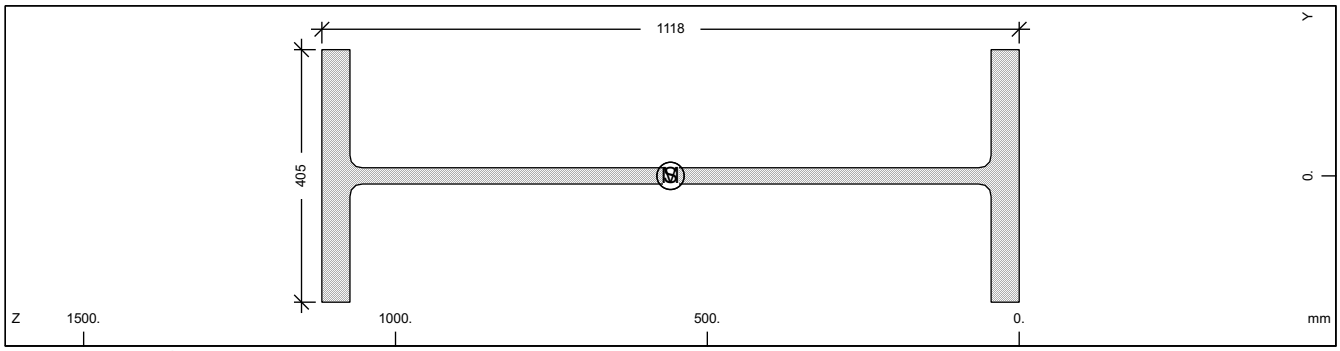

Cross section No. 43 - HL 1100 R

Static properties of cross section

Mat NoR	A[cm2] It[cm4]	Ay/Az/Ayz [cm2]	Iy/Iz/Iyz [cm4]	ys/zs [mm]	y/z-sc [mm]	modules [N/mm2]	gam [kN/m]
1	635.21		1294057.2	0.0	0.0	210000	4.99
	2677.5		49984.4	559.0	559.0	80769	

SOFiSTiK AG - www.sofistik.de

Composite bridge 38+50+38, b=14.25m, 2x2HL1100R HISTAR460 , slab 0.30m C30/37

Additional static properties of cross section

Alfa-T	ymin ymax	zmin zmax	hymin hzmin	AK AB	MB	Tau-T Tau-B	Tau-Vy Tau-Vz
[1/°K]	[mm]	[mm]	[mm]	[cm2]		[1/m3]	[1/m2]
1.2E-05	-202.5	-559.0		3.204E+02		1.681E+03	4.085E+01
	202.5	559.0					3.953E+01

Section values for warping

Wmin[cm2]	Wmax[cm2]	CM[cm6]	CMS[cm4]	ASwyy[cm6]	ASwzz[cm6]	ry[mm]	rz[mm]
-1086.41	1086.41	0.00	0.0	0.00	0.00	0.0	0.0

Design values of cross section

Mat NoR	A[cm2] It[cm4]	Ay/Az/Ayz [cm2]	Iy/Iz/Iyz [cm4]	ys/zs [mm]	modules [N/mm2]	gam [kN/m]
1	635.21		1294057.2	0.0	182609	4.99
	2677.5		49984.4	559.0	70234	

Design forces and moments
(C/E = characteristic plastic/elastic, D=plast.Design, F=elast. Design)

	N[kN]	Vy[kN]	Vz[kN]	Mt[kNm]	My[kNm]	Mz[kNm]	y[mm]	z[mm]	BUCK
C	21279.7	7049.88	5810.37	245.55	8910.82	1296.56	0.0	559.0	b c
C	0.0				0.00	0.00	0.0	0.0	COMB
E	21279.7	2433.78	3974.72	4650.34	7755.08	826.90	0.0	559.0	
D	18504.1	6130.33	5052.50	213.52	7748.54	1127.44	0.0	559.0	
D	0.0				0.00	0.00	0.0	0.0	COMB
F	18504.1	2116.33	3456.28	4043.78	6743.55	719.05	0.0	559.0	

Additional Design Data

M	periphery-O/-I [m2/m]	[m2/m]	deff [mm]	t-min [mm]	t-max [mm]	SMP [o/o]	thet-p [tm2/m]	thet-y [tm2/m]	thet-z [tm2/m]	thet-yz [tm2/m]
	3.771			26.0	45.0	0.0	0.106	0.102	0.004	0.000

Rolled steel			D[mm]	B[mm]	s[mm]	t[mm]	r[mm]	yr[mm]	zr[mm]	[grd]
HL	1100.	-18.	1118.0	405.0	26.0	45.0	20.0			

Windcoefficients depending on the angle of attack

alpha [°]	cw-y [-]	cw-z [-]	cw-t [-]	Ref	c-lat [-]	Strouhal [-]	a-gallop [-]
-180.00	-2.000	0.000	0.000	BH	0.800	0.110	5.091
-135.00	-1.800	-1.200	0.000	BH	0.800	0.110	5.091
-90.00	0.000	-1.600	0.000	BH	0.800	0.110	5.091
-45.00	1.800	-1.200	0.000	BH	0.800	0.110	5.091
0.00	2.000	0.000	0.000	BH	0.800	0.110	5.091
45.00	1.800	1.200	0.000	BH	0.800	0.110	5.091
90.00	0.000	1.600	0.000	BH	0.800	0.110	5.091
135.00	-1.800	1.200	0.000	BH	0.800	0.110	5.091
180.00	-2.000	0.000	0.000	BH	0.800	0.110	5.091

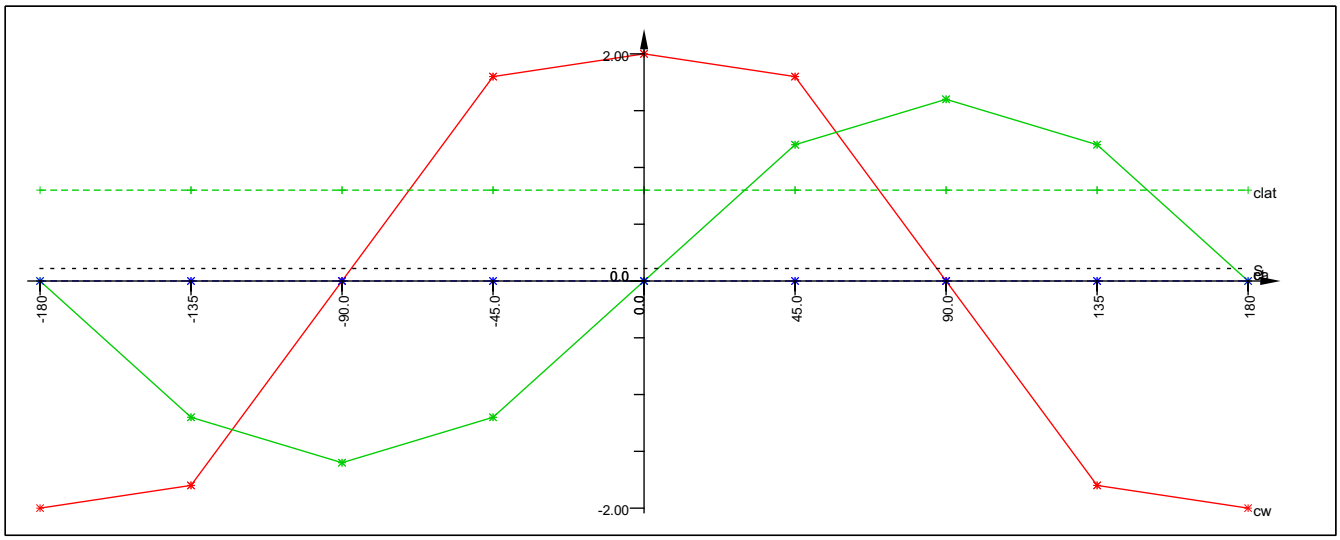

SOFiSTiK AG - www.sofistik.de

Composite bridge 38+50+38, b=14.25m, 2x2HL1100R HISTAR460 , slab 0.30m C30/37

Cross section No. 44 - HL 1100 R

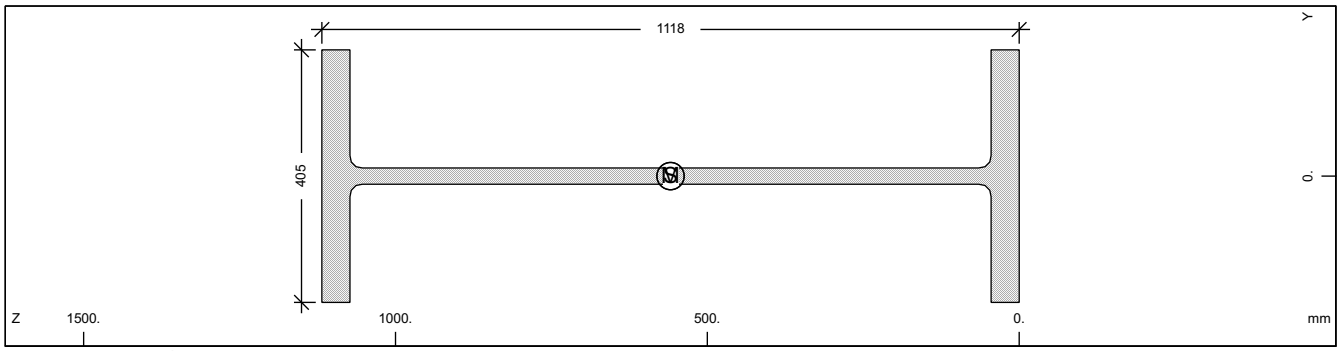

Cross section No. 44 - HL 1100 R

Static properties of cross section

Mat NoR	A[cm2] It[cm4]	Ay/Az/Ayz [cm2]	Iy/Iz/Iyz [cm4]	ys/zs [mm]	y/z-sc [mm]	modules [N/mm2]	gam [kN/m]
1	635.21		1294057.2	0.0	0.0	210000	4.99
	2677.5		49984.4	559.0	559.0	80769	

Additional static properties of cross section

Alfa-T [1/°K]	ymin ymax [mm]	zmin zmax [mm]	hymin hzmin [mm]	AK AB [cm2]	MB	Tau-T Tau-B [1/m3]	Tau-Vy Tau-Vz [1/m2]
1.2E-05	-202.5	-559.0		3.204E+02		1.681E+03	4.085E+01
	202.5	559.0					3.953E+01

Section values for warping

Wmin[cm2]	Wmax[cm2]	CM[cm6]	CMS[cm4]	ASwyy[cm6]	ASwzz[cm6]	ry[mm]	rz[mm]
-1086.41	1086.41	0.00	0.0	0.00	0.00	0.0	0.0

Design values of cross section

Mat NoR	A[cm2] It[cm4]	Ay/Az/Ayz [cm2]	Iy/Iz/Iyz [cm4]	ys/zs [mm]	modules [N/mm2]	gam [kN/m]
1	635.21		1294057.2	0.0	182609	4.99
	2677.5		49984.4	559.0	70234	

Design forces and moments
(C/E = characteristic plastic/elastic, D=plast.Design, F=elast. Design)

	N[kN]	Vy[kN]	Vz[kN]	Mt[kNm]	My[kNm]	Mz[kNm]	y[mm]	z[mm]	BUCK
C	21279.7	7049.88	5810.37	245.55	8910.82	1296.56	0.0	559.0	b c
C	0.0				0.00	0.00	0.0	0.0	COMB
E	21279.7	2433.78	3974.72	4650.34	7755.08	826.90	0.0	559.0	
D	18504.1	6130.33	5052.50	213.52	7748.54	1127.44	0.0	559.0	
D	0.0				0.00	0.00	0.0	0.0	COMB
F	18504.1	2116.33	3456.28	4043.78	6743.55	719.05	0.0	559.0	

Additional Design Data

M	periphery-O/-I [m2/m]	[m2/m]	deff [mm]	t-min [mm]	t-max [mm]	SMP [o/o]	thet-p [tm2/m]	thet-y [tm2/m]	thet-z [tm2/m]	thet-yz [tm2/m]
	3.771			26.0	45.0	0.0	0.106	0.102	0.004	0.000

Rolled steel	D[mm]	B[mm]	s[mm]	t[mm]	r[mm]	yr[mm]	zr[mm]	[grd]
HL 1100. -18.	1118.0	405.0	26.0	45.0	20.0			

Windcoefficients depending on the angle of attack

alpha [°]	cw-y [-]	cw-z [-]	cw-t [-]	Ref	c-lat [-]	Strouhal [-]	a-gallop [-]
-180.00	-2.000	0.000	0.000	BH	0.800	0.110	5.091
-135.00	-1.800	-1.200	0.000	BH	0.800	0.110	5.091
-90.00	0.000	-1.600	0.000	BH	0.800	0.110	5.091
-45.00	1.800	-1.200	0.000	BH	0.800	0.110	5.091
0.00	2.000	0.000	0.000	BH	0.800	0.110	5.091
45.00	1.800	1.200	0.000	BH	0.800	0.110	5.091

SOFiSTiK AG - www.sofistik.de

Composite bridge 38+50+38, b=14.25m, 2x2HL1100R HISTAR460 , slab 0.30m C30/37

Windcoefficients depending on the angle of attack

alpha [°]	cw-y [-]	cw-z [-]	cw-t [-]	Ref	c-lat [-]	Strouhal [-]	a-gallop [-]
90.00	0.000	1.600	0.000	BH	0.800	0.110	5.091
135.00	-1.800	1.200	0.000	BH	0.800	0.110	5.091
180.00	-2.000	0.000	0.000	BH	0.800	0.110	5.091

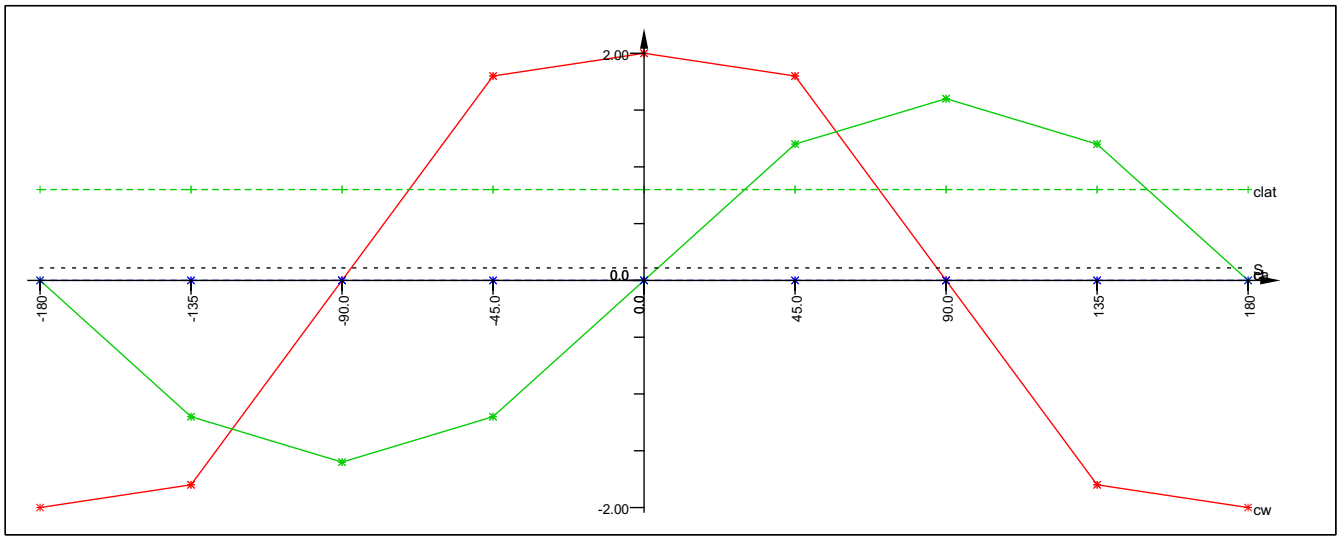

Cross section No. 45 - HL 1100 R

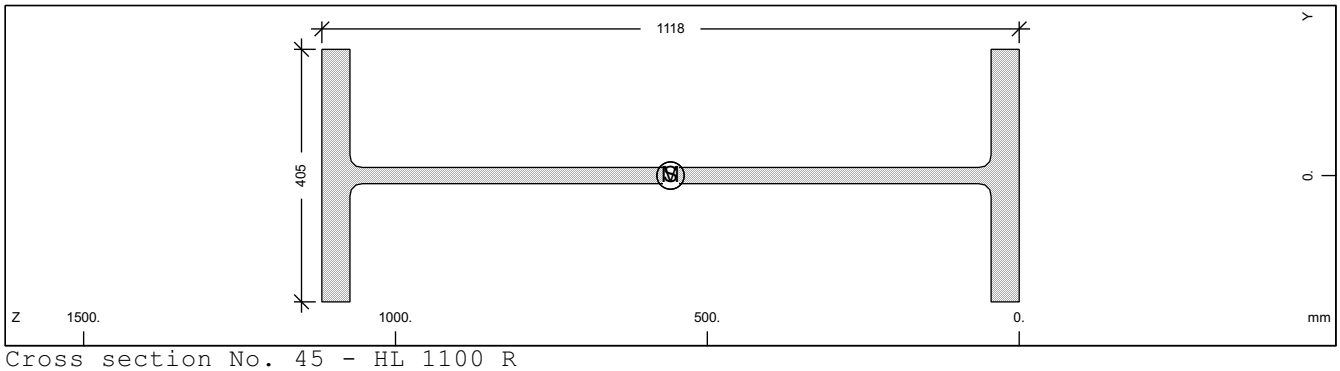

Cross section No. 45 - HL 1100 R

Static properties of cross section

Mat NoR	A[cm2] It[cm4]	Ay/Az/Ayz [cm2]	Iy/Iz/Iyz [cm4]	ys/zs [mm]	y/z-sc [mm]	modules [N/mm2]	gam [kN/m]
1	635.21		1294057.2	0.0	0.0	210000	4.99
	2677.5		49984.4	559.0	559.0	80769	

Additional static properties of cross section

Alfa-T [1/°K]	ymin ymax [mm]	zmin zmax [mm]	hymin hzmin [mm]	AK AB [cm2]	MB	Tau-T Tau-B [1/m3]	Tau-Vy Tau-Vz [1/m2]
1.2E-05	-202.5	-559.0		3.204E+02		1.681E+03	4.085E+01
	202.5	559.0					3.953E+01

Section values for warping

Wmin[cm2]	Wmax[cm2]	CM[cm6]	CMS[cm4]	ASwyy[cm6]	ASwzz[cm6]	ry[mm]	rz[mm]
-1086.41	1086.41	0.00	0.0	0.00	0.00	0.0	0.0

Design values of cross section

Mat NoR	A[cm2] It[cm4]	Ay/Az/Ayz [cm2]	Iy/Iz/Iyz [cm4]	ys/zs [mm]	modules [N/mm2]	gam [kN/m]
1	635.21		1294057.2	0.0	182609	4.99
	2677.5		49984.4	559.0	70234	

SOFiSTiK AG - www.sofistik.de

Composite bridge 38+50+38, b=14.25m, 2x2HL1100R HISTAR460 , slab 0.30m C30/37

Design forces and moments
(C/E = characteristic plastic/elastic, D=plast.Design, F=elast. Design)

	N[kN]	Vy[kN]	Vz[kN]	Mt[kNm]	My[kNm]	Mz[kNm]	y[mm]	z[mm]	BUCK
C	21279.7	7049.88	5810.37	245.55	8910.82	1296.56	0.0	559.0	b c
C	0.0				0.00	0.00	0.0	0.0	COMB
E	21279.7	2433.78	3974.72	4650.34	7755.08	826.90	0.0	559.0	
D	18504.1	6130.33	5052.50	213.52	7748.54	1127.44	0.0	559.0	
D	0.0				0.00	0.00	0.0	0.0	COMB
F	18504.1	2116.33	3456.28	4043.78	6743.55	719.05	0.0	559.0	

Additional Design Data

M	periphery-O/-I [m2/m]	[m2/m]	deff [mm]	t-min [mm]	t-max [mm]	SMP [o/o]	thet-p [tm2/m]	thet-y [tm2/m]	thet-z [tm2/m]	thet-yz [tm2/m]
	3.771			26.0	45.0	0.0	0.106	0.102	0.004	0.000

Rolled steel	D[mm]	B[mm]	s[mm]	t[mm]	r[mm]	yr[mm]	zr[mm]	[grd]
HL 1100. -18.	1118.0	405.0	26.0	45.0	20.0			

Windcoefficients depending on the angle of attack

alpha [°]	cw-y [-]	cw-z [-]	cw-t [-]	Ref	c-lat [-]	Strouhal [-]	a-gallop [-]
-180.00	-2.000	0.000	0.000	BH	0.800	0.110	5.091
-135.00	-1.800	-1.200	0.000	BH	0.800	0.110	5.091
-90.00	0.000	-1.600	0.000	BH	0.800	0.110	5.091
-45.00	1.800	-1.200	0.000	BH	0.800	0.110	5.091
0.00	2.000	0.000	0.000	BH	0.800	0.110	5.091
45.00	1.800	1.200	0.000	BH	0.800	0.110	5.091
90.00	0.000	1.600	0.000	BH	0.800	0.110	5.091
135.00	-1.800	1.200	0.000	BH	0.800	0.110	5.091
180.00	-2.000	0.000	0.000	BH	0.800	0.110	5.091

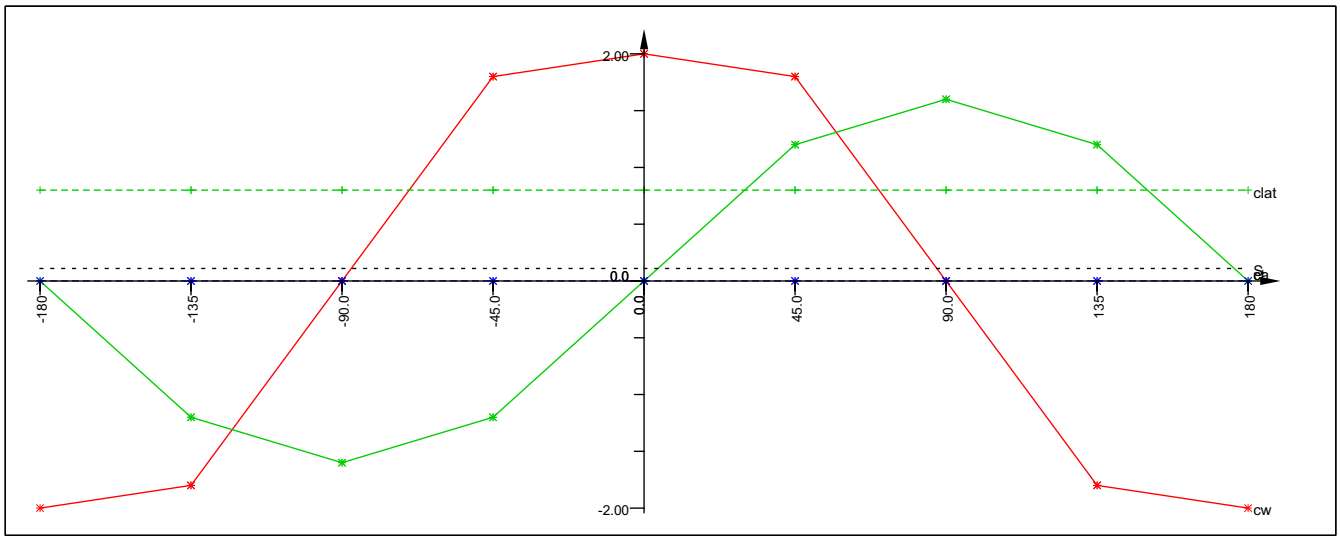

SOFiSTiK AG - www.sofistik.de

Composite bridge 38+50+38, b=14.25m, 2x2HL1100R HISTAR460 , slab 0.30m C30/37

Cross section No. 46 - HL 1100 R

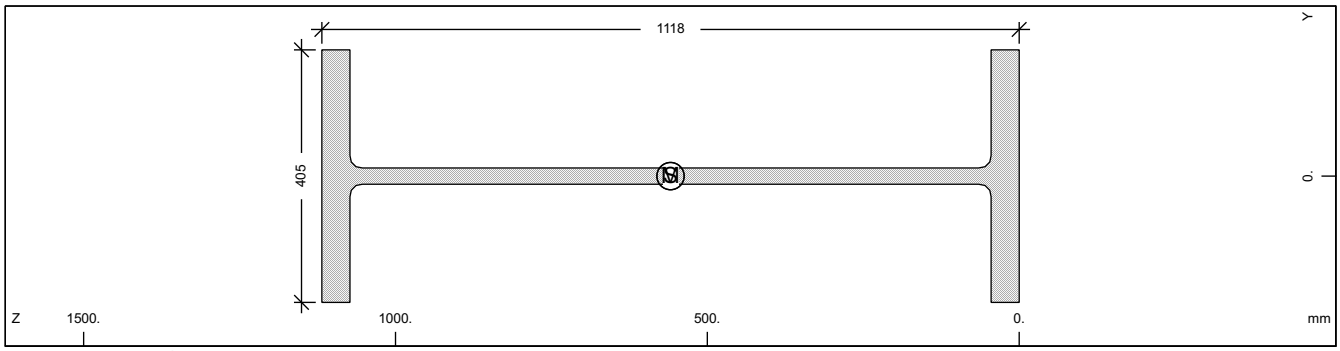

Cross section No. 46 - HL 1100 R

Static properties of cross section

Mat NoR	A[cm2] It[cm4]	Ay/Az/Ayz [cm2]	Iy/Iz/Iyz [cm4]	ys/zs [mm]	y/z-sc [mm]	modules [N/mm2]	gam [kN/m]
1	635.21		1294057.2	0.0	0.0	210000	4.99
	2677.5		49984.4	559.0	559.0	80769	

Additional static properties of cross section

Alfa-T [1/°K]	ymin ymax [mm]	zmin zmax [mm]	hymin hzmin [mm]	AK AB [cm2]	MB	Tau-T Tau-B [1/m3]	Tau-Vy Tau-Vz [1/m2]
1.2E-05	-202.5	-559.0		3.204E+02		1.681E+03	4.085E+01
	202.5	559.0					3.953E+01

Section values for warping

Wmin[cm2]	Wmax[cm2]	CM[cm6]	CMS[cm4]	ASwyy[cm6]	ASwzz[cm6]	ry[mm]	rz[mm]
-1086.41	1086.41	0.00	0.0	0.00	0.00	0.0	0.0

Design values of cross section

Mat NoR	A[cm2] It[cm4]	Ay/Az/Ayz [cm2]	Iy/Iz/Iyz [cm4]	ys/zs [mm]	modules [N/mm2]	gam [kN/m]
1	635.21		1294057.2	0.0	182609	4.99
	2677.5		49984.4	559.0	70234	

Design forces and moments
(C/E = characteristic plastic/elastic, D=plast.Design, F=elast. Design)

	N[kN]	Vy[kN]	Vz[kN]	Mt[kNm]	My[kNm]	Mz[kNm]	y[mm]	z[mm]	BUCK
C	21279.7	7049.88	5810.37	245.55	8910.82	1296.56	0.0	559.0	b c
C	0.0				0.00	0.00	0.0	0.0	COMB
E	21279.7	2433.78	3974.72	4650.34	7755.08	826.90	0.0	559.0	
D	18504.1	6130.33	5052.50	213.52	7748.54	1127.44	0.0	559.0	
D	0.0				0.00	0.00	0.0	0.0	COMB
F	18504.1	2116.33	3456.28	4043.78	6743.55	719.05	0.0	559.0	

Additional Design Data

M	periphery-O/-I [m2/m] [m2/m]	deff [mm]	t-min [mm]	t-max [mm]	SMP [o/o]	thet-p [tm2/m]	thet-y [tm2/m]	thet-z [tm2/m]	thet-yz [tm2/m]
	3.771		26.0	45.0	0.0	0.106	0.102	0.004	0.000

Rolled steel	D[mm]	B[mm]	s[mm]	t[mm]	r[mm]	yr[mm]	zr[mm]	[grd]
HL 1100. -18.	1118.0	405.0	26.0	45.0	20.0			

Windcoefficients depending on the angle of attack

alpha [°]	cw-y [-]	cw-z [-]	cw-t [-]	Ref	c-lat [-]	Strouhal [-]	a-gallop [-]
-180.00	-2.000	0.000	0.000	BH	0.800	0.110	5.091
-135.00	-1.800	-1.200	0.000	BH	0.800	0.110	5.091
-90.00	0.000	-1.600	0.000	BH	0.800	0.110	5.091
-45.00	1.800	-1.200	0.000	BH	0.800	0.110	5.091
0.00	2.000	0.000	0.000	BH	0.800	0.110	5.091
45.00	1.800	1.200	0.000	BH	0.800	0.110	5.091

SOFiSTiK AG - www.sofistik.de

Composite bridge 38+50+38, b=14.25m, 2x2HL1100R HISTAR460 , slab 0.30m C30/37

Windcoefficients depending on the angle of attack

alpha [°]	cw-y [-]	cw-z [-]	cw-t [-]	Ref	c-lat [-]	Strouhal [-]	a-gallop [-]
90.00	0.000	1.600	0.000	BH	0.800	0.110	5.091
135.00	-1.800	1.200	0.000	BH	0.800	0.110	5.091
180.00	-2.000	0.000	0.000	BH	0.800	0.110	5.091

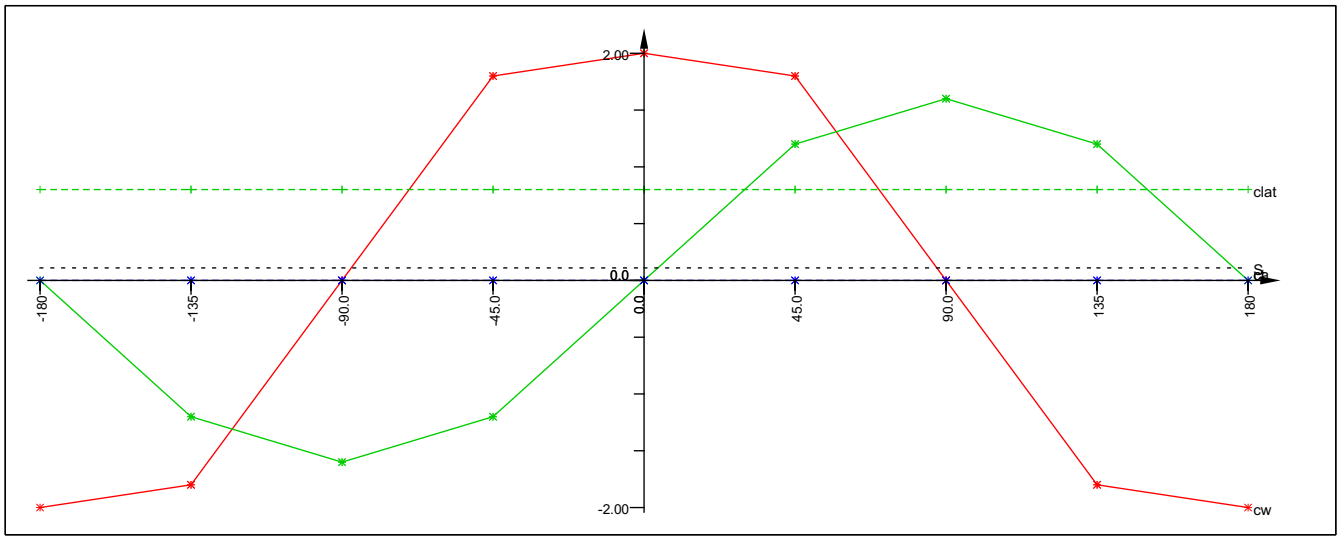

Cross section No. 47 - HL 1100 R

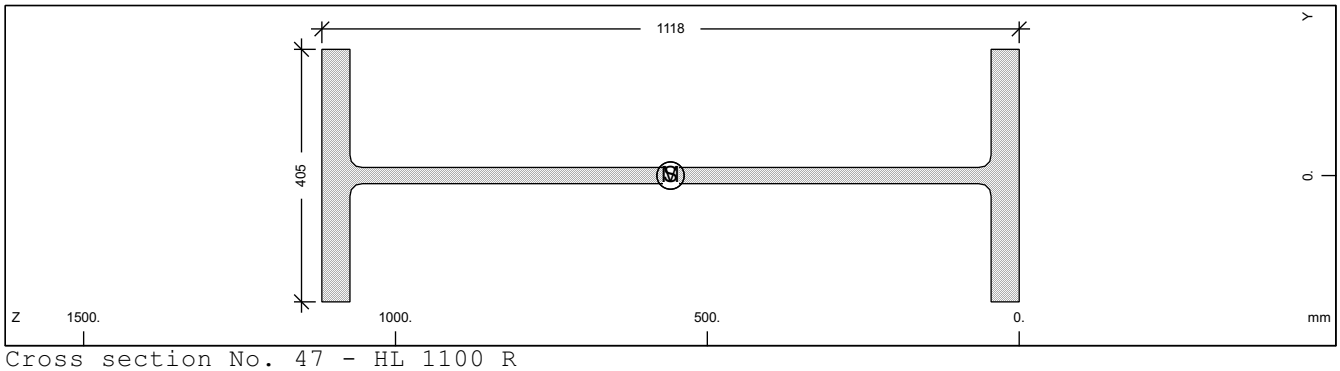

Cross section No. 47 - HL 1100 R

Static properties of cross section

Mat NoR	A[cm2] It[cm4]	Ay/Az/Ayz [cm2]	Iy/Iz/Iyz [cm4]	ys/zs [mm]	y/z-sc [mm]	modules [N/mm2]	gam [kN/m]
1	635.21		1294057.2	0.0	0.0	210000	4.99
	2677.5		49984.4	559.0	559.0	80769	

Additional static properties of cross section

Alfa-T [1/°K]	ymin ymax [mm]	zmin zmax [mm]	hymin hzmin [mm]	AK AB [cm2]	MB	Tau-T Tau-B [1/m3]	Tau-Vy Tau-Vz [1/m2]
1.2E-05	-202.5	-559.0		3.204E+02		1.681E+03	4.085E+01
	202.5	559.0					3.953E+01

Section values for warping

Wmin[cm2]	Wmax[cm2]	CM[cm6]	CMS[cm4]	ASwyy[cm6]	ASwzz[cm6]	ry[mm]	rz[mm]
-1086.41	1086.41	0.00	0.0	0.00	0.00	0.0	0.0

Design values of cross section

Mat NoR	A[cm2] It[cm4]	Ay/Az/Ayz [cm2]	Iy/Iz/Iyz [cm4]	ys/zs [mm]	modules [N/mm2]	gam [kN/m]
1	635.21		1294057.2	0.0	182609	4.99
	2677.5		49984.4	559.0	70234	

SOFiSTiK AG - www.sofistik.de

Composite bridge 38+50+38, b=14.25m, 2x2HL1100R HISTAR460 , slab 0.30m C30/37

Design forces and moments
(C/E = characteristic plastic/elastic, D=plast.Design, F=elast. Design)

	N[kN]	Vy[kN]	Vz[kN]	Mt[kNm]	My[kNm]	Mz[kNm]	y[mm]	z[mm]	BUCK
C	21279.7	7049.88	5810.37	245.55	8910.82	1296.56	0.0	559.0	b c
C	0.0				0.00	0.00	0.0	0.0	COMB
E	21279.7	2433.78	3974.72	4650.34	7755.08	826.90	0.0	559.0	
D	18504.1	6130.33	5052.50	213.52	7748.54	1127.44	0.0	559.0	
D	0.0				0.00	0.00	0.0	0.0	COMB
F	18504.1	2116.33	3456.28	4043.78	6743.55	719.05	0.0	559.0	

Additional Design Data

M	periphery-O/-I [m2/m]	[m2/m]	deff [mm]	t-min [mm]	t-max [mm]	SMP [o/o]	thet-p [tm2/m]	thet-y [tm2/m]	thet-z [tm2/m]	thet-yz [tm2/m]
	3.771			26.0	45.0	0.0	0.106	0.102	0.004	0.000

Rolled steel	D[mm]	B[mm]	s[mm]	t[mm]	r[mm]	yr[mm]	zr[mm]	[grd]
HL 1100. -18.	1118.0	405.0	26.0	45.0	20.0			

Windcoefficients depending on the angle of attack

alpha [°]	cw-y [-]	cw-z [-]	cw-t [-]	Ref	c-lat [-]	Strouhal [-]	a-gallop [-]
-180.00	-2.000	0.000	0.000	BH	0.800	0.110	5.091
-135.00	-1.800	-1.200	0.000	BH	0.800	0.110	5.091
-90.00	0.000	-1.600	0.000	BH	0.800	0.110	5.091
-45.00	1.800	-1.200	0.000	BH	0.800	0.110	5.091
0.00	2.000	0.000	0.000	BH	0.800	0.110	5.091
45.00	1.800	1.200	0.000	BH	0.800	0.110	5.091
90.00	0.000	1.600	0.000	BH	0.800	0.110	5.091
135.00	-1.800	1.200	0.000	BH	0.800	0.110	5.091
180.00	-2.000	0.000	0.000	BH	0.800	0.110	5.091

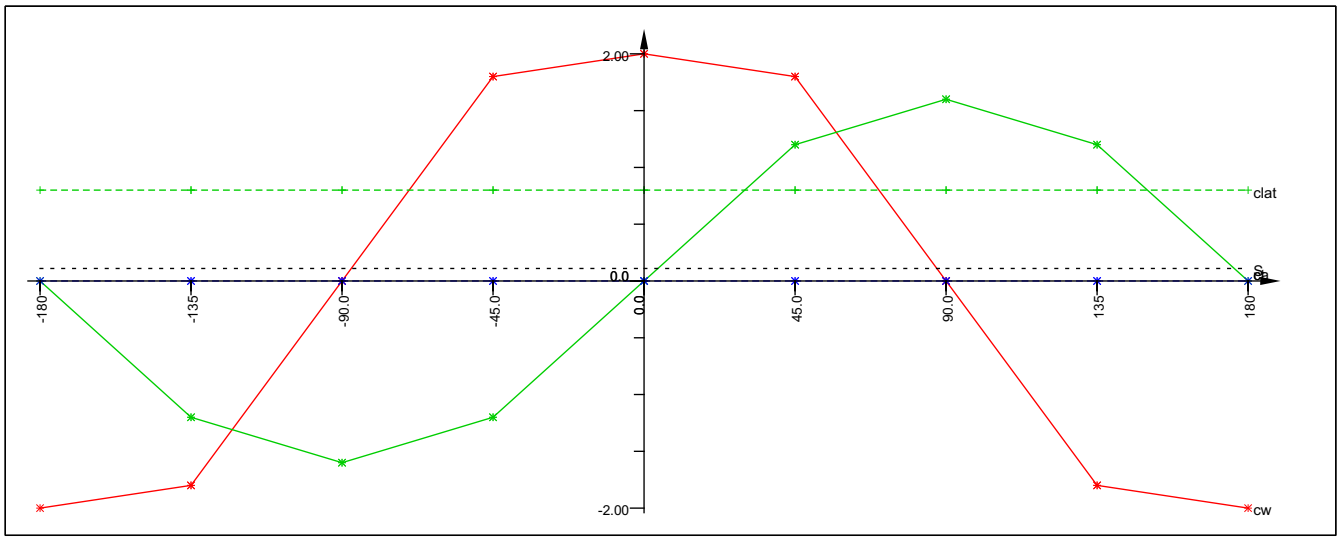

SOFiSTiK AG - www.sofistik.de

Composite bridge 38+50+38, b=14.25m, 2x2HL1100R HISTAR460 , slab 0.30m C30/37

Cross section No. 48 - HL 1100 R

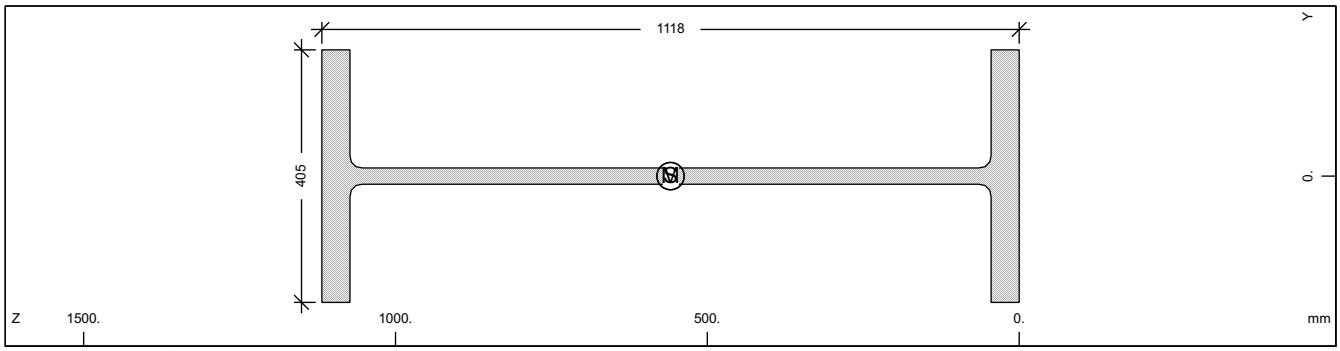

Cross section No. 48 - HL 1100 R

Static properties of cross section

Mat NoR	A[cm2] It[cm4]	Ay/Az/Ayz [cm2]	Iy/Iz/Iyz [cm4]	ys/zs [mm]	y/z-sc [mm]	modules [N/mm2]	gam [kN/m]
1	635.21		1294057.2	0.0	0.0	210000	4.99
	2677.5		49984.4	559.0	559.0	80769	

Additional static properties of cross section

Alfa-T [1/°K]	ymin ymax [mm]	zmin zmax [mm]	hymin hzmin [mm]	AK AB [cm2]	MB	Tau-T Tau-B [1/m3]	Tau-Vy Tau-Vz [1/m2]
1.2E-05	-202.5	-559.0		3.204E+02		1.681E+03	4.085E+01
	202.5	559.0					3.953E+01

Section values for warping

Wmin[cm2]	Wmax[cm2]	CM[cm6]	CMS[cm4]	ASwyy[cm6]	ASwzz[cm6]	ry[mm]	rz[mm]
-1086.41	1086.41	0.00	0.0	0.00	0.00	0.0	0.0

Design values of cross section

Mat NoR	A[cm2] It[cm4]	Ay/Az/Ayz [cm2]	Iy/Iz/Iyz [cm4]	ys/zs [mm]	modules [N/mm2]	gam [kN/m]
1	635.21		1294057.2	0.0	182609	4.99
	2677.5		49984.4	559.0	70234	

Design forces and moments
(C/E = characteristic plastic/elastic, D=plast.Design, F=elast. Design)

	N[kN]	Vy[kN]	Vz[kN]	Mt[kNm]	My[kNm]	Mz[kNm]	y[mm]	z[mm]	BUCK
C	21279.7	7049.88	5810.37	245.55	8910.82	1296.56	0.0	559.0	b c
C	0.0				0.00	0.00	0.0	0.0	COMB
E	21279.7	2433.78	3974.72	4650.34	7755.08	826.90	0.0	559.0	
D	18504.1	6130.33	5052.50	213.52	7748.54	1127.44	0.0	559.0	
D	0.0				0.00	0.00	0.0	0.0	COMB
F	18504.1	2116.33	3456.28	4043.78	6743.55	719.05	0.0	559.0	

Additional Design Data

M	periphery-O/-I [m2/m] [m2/m]	deff [mm]	t-min [mm]	t-max [mm]	SMP [o/o]	thet-p [tm2/m]	thet-y [tm2/m]	thet-z [tm2/m]	thet-yz [tm2/m]
	3.771		26.0	45.0	0.0	0.106	0.102	0.004	0.000

Rolled steel	D[mm]	B[mm]	s[mm]	t[mm]	r[mm]	yr[mm]	zr[mm]	[grd]
HL 1100. -18.	1118.0	405.0	26.0	45.0	20.0			

Windcoefficients depending on the angle of attack

alpha [°]	cw-y [-]	cw-z [-]	cw-t [-]	Ref	c-lat [-]	Strouhal [-]	a-gallop [-]
-180.00	-2.000	0.000	0.000	BH	0.800	0.110	5.091
-135.00	-1.800	-1.200	0.000	BH	0.800	0.110	5.091
-90.00	0.000	-1.600	0.000	BH	0.800	0.110	5.091
-45.00	1.800	-1.200	0.000	BH	0.800	0.110	5.091
0.00	2.000	0.000	0.000	BH	0.800	0.110	5.091
45.00	1.800	1.200	0.000	BH	0.800	0.110	5.091

SOFiSTiK AG - www.sofistik.de

Composite bridge 38+50+38, b=14.25m, 2x2HL1100R HISTAR460 , slab 0.30m C30/37

Windcoefficients depending on the angle of attack

alpha [°]	cw-y [-]	cw-z [-]	cw-t [-]	Ref	c-lat [-]	Strouhal [-]	a-gallop [-]
90.00	0.000	1.600	0.000	BH	0.800	0.110	5.091
135.00	-1.800	1.200	0.000	BH	0.800	0.110	5.091
180.00	-2.000	0.000	0.000	BH	0.800	0.110	5.091

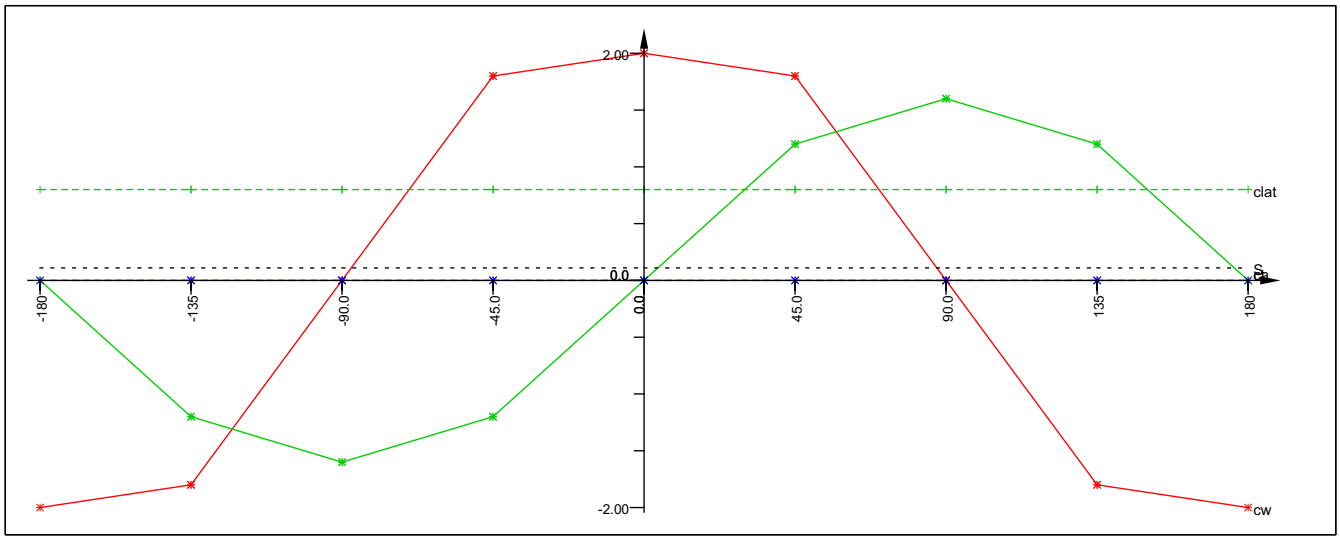

Cross section No. 49 - HL 1100 R

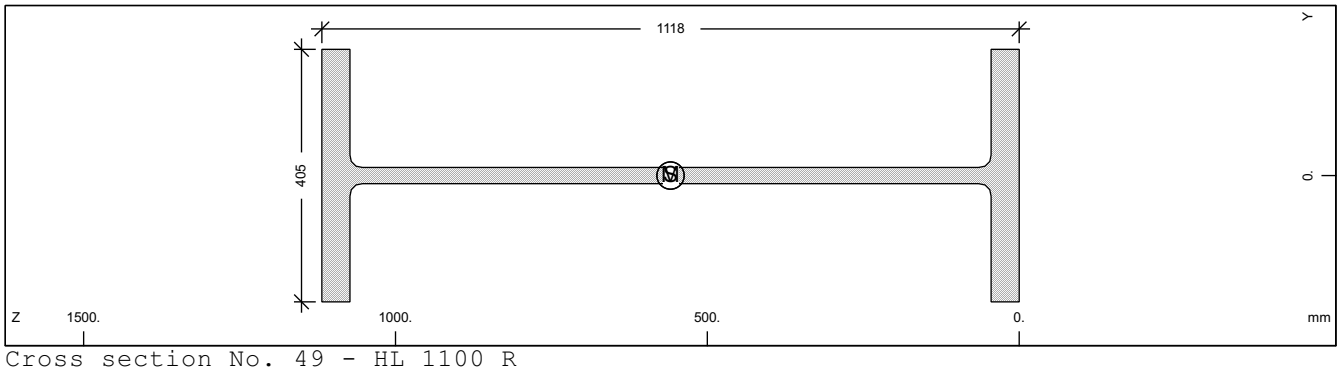

Cross section No. 49 - HL 1100 R

Static properties of cross section

Mat NoR	A[cm2] It[cm4]	Ay/Az/Ayz [cm2]	Iy/Iz/Iyz [cm4]	ys/zs [mm]	y/z-sc [mm]	modules [N/mm2]	gam [kN/m]
1	635.21		1294057.2	0.0	0.0	210000	4.99
	2677.5		49984.4	559.0	559.0	80769	

Additional static properties of cross section

Alfa-T [1/°K]	ymin ymax [mm]	zmin zmax [mm]	hymin hzmin [mm]	AK AB [cm2]	MB	Tau-T Tau-B [1/m3]	Tau-Vy Tau-Vz [1/m2]
1.2E-05	-202.5	-559.0		3.204E+02		1.681E+03	4.085E+01
	202.5	559.0					3.953E+01

Section values for warping

Wmin[cm2]	Wmax[cm2]	CM[cm6]	CMS[cm4]	ASwyy[cm6]	ASwzz[cm6]	ry[mm]	rz[mm]
-1086.41	1086.41	0.00	0.0	0.00	0.00	0.0	0.0

Design values of cross section

Mat NoR	A[cm2] It[cm4]	Ay/Az/Ayz [cm2]	Iy/Iz/Iyz [cm4]	ys/zs [mm]	modules [N/mm2]	gam [kN/m]
1	635.21		1294057.2	0.0	182609	4.99
	2677.5		49984.4	559.0	70234	

SOFiSTiK AG - www.sofistik.de

Composite bridge 38+50+38, b=14.25m, 2x2HL1100R HISTAR460 , slab 0.30m C30/37

Design forces and moments
(C/E = characteristic plastic/elastic, D=plast.Design, F=elast. Design)

	N[kN]	Vy[kN]	Vz[kN]	Mt[kNm]	My[kNm]	Mz[kNm]	y[mm]	z[mm]	BUCK
C	21279.7	7049.88	5810.37	245.55	8910.82	1296.56	0.0	559.0	b c
C	0.0				0.00	0.00	0.0	0.0	COMB
E	21279.7	2433.78	3974.72	4650.34	7755.08	826.90	0.0	559.0	
D	18504.1	6130.33	5052.50	213.52	7748.54	1127.44	0.0	559.0	
D	0.0				0.00	0.00	0.0	0.0	COMB
F	18504.1	2116.33	3456.28	4043.78	6743.55	719.05	0.0	559.0	

Additional Design Data

M	periphery-O/-I [m2/m]	[m2/m]	deff [mm]	t-min [mm]	t-max [mm]	SMP [o/o]	thet-p [tm2/m]	thet-y [tm2/m]	thet-z [tm2/m]	thet-yz [tm2/m]
	3.771			26.0	45.0	0.0	0.106	0.102	0.004	0.000

Rolled steel	D[mm]	B[mm]	s[mm]	t[mm]	r[mm]	yr[mm]	zr[mm]	[grd]
HL 1100. -18.	1118.0	405.0	26.0	45.0	20.0			

Windcoefficients depending on the angle of attack

alpha [°]	cw-y [-]	cw-z [-]	cw-t [-]	Ref	c-lat [-]	Strouhal [-]	a-gallop [-]
-180.00	-2.000	0.000	0.000	BH	0.800	0.110	5.091
-135.00	-1.800	-1.200	0.000	BH	0.800	0.110	5.091
-90.00	0.000	-1.600	0.000	BH	0.800	0.110	5.091
-45.00	1.800	-1.200	0.000	BH	0.800	0.110	5.091
0.00	2.000	0.000	0.000	BH	0.800	0.110	5.091
45.00	1.800	1.200	0.000	BH	0.800	0.110	5.091
90.00	0.000	1.600	0.000	BH	0.800	0.110	5.091
135.00	-1.800	1.200	0.000	BH	0.800	0.110	5.091
180.00	-2.000	0.000	0.000	BH	0.800	0.110	5.091

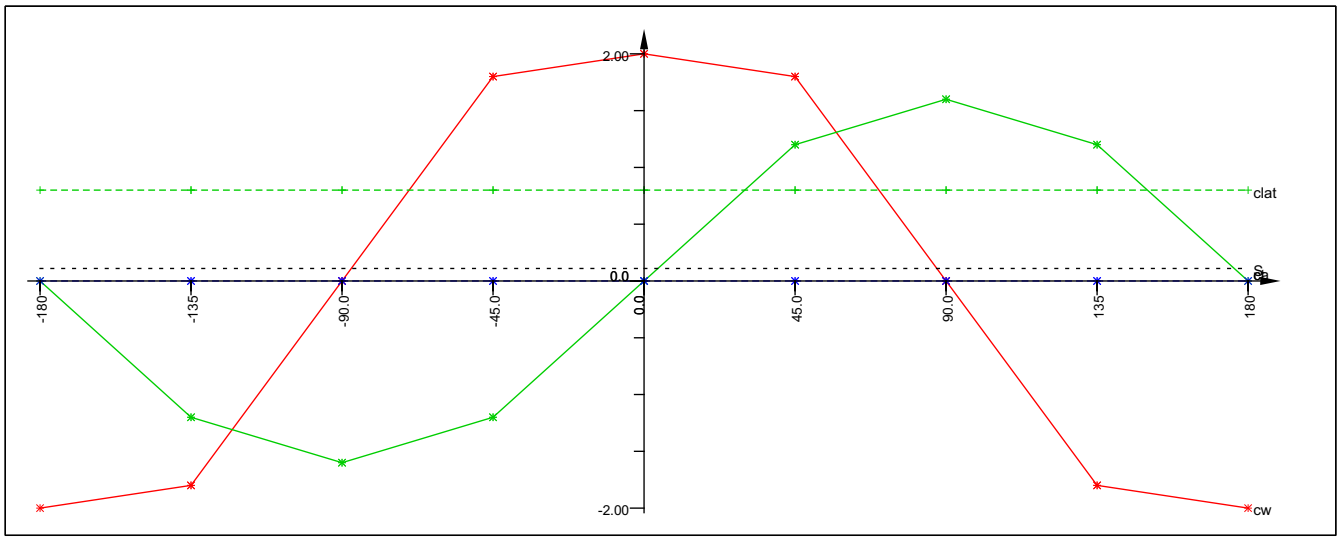

SOFiSTiK AG - www.sofistik.de

Composite bridge 38+50+38, b=14.25m, 2x2HL1100R HISTAR460 , slab 0.30m C30/37

Cross section No. 61 - B/H = 117.4 / 150 cm

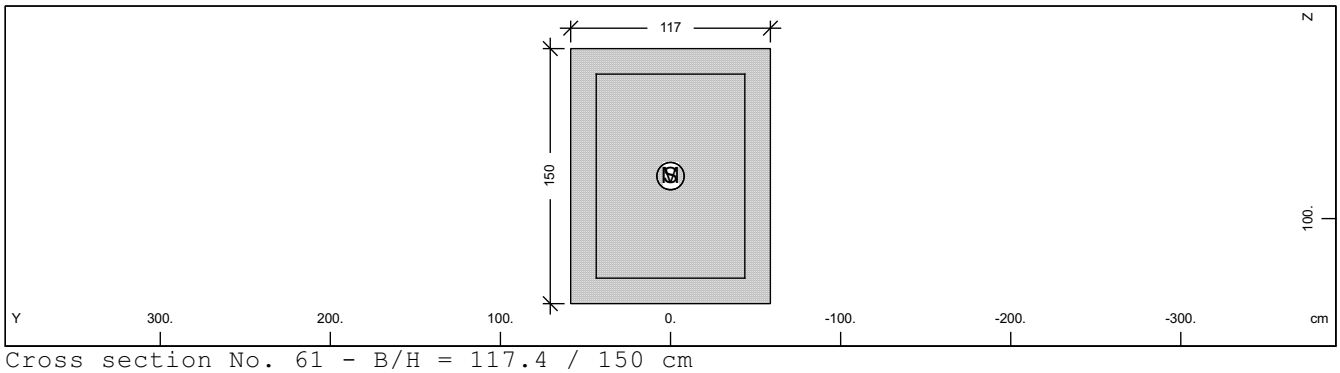

Cross section No. 61 - B/H = 117.4 / 150 cm

Static properties of cross section

Mat NoR	A[m2] It[m4]	Ay/Az/Ayz [m2]	Iy/Iz/Iyz [m4]	ys/zs [cm]	y/z-sc [cm]	modules [MPa]	gam [kN/m]
22	1.7610E+00		3.302E-01	0.00	0.00	32837	0.00
100	4.218E-01		2.023E-01	75.00	75.00	13682	

Additional static properties of cross section

Alfa-T [1/°K]	ymin ymax [cm]	zmin zmax [cm]	hymin hzmin [cm]	AK AB [m2]	MB	Tau-T Tau-B [1/m3]	Tau-Vy Tau-Vz [1/m2]
1.0E-05	-58.70	-75.00		9.889E-01	100	1.535E+00	8.518E-01
	58.70	75.00		1.761E+00			8.518E-01

Rectangular cross-section/T-beam

H/B [cm]	So/Su [cm]	Aso/u [cm2]	Ho/Bo [cm]	B-eff [cm]
150.00	15.00			32.93
117.40	15.00			

Additional Design Data

M	periphery-O/-I [m2/m] [m2/m]	deff [cm]	t-min [cm]	t-max [cm]	SMP [o/o]	thet-p [tm2/m]	thet-y [tm2/m]	thet-z [tm2/m]	thet-yz [tm2/m]
	5.348	65.86	117.40	150.00	0.0	0.000	0.000	0.000	

Reinforcement global values

Layer	mS	mR	area [cm2]	lower-A [cm2]	upper-A [cm2]	yL [cm]	zL [cm]	L-tors [cm]	N-pr [kN]	M-pr [kNm]
M1	22	100	0.87	0.00		0.00	135.00	87.40		
M2	22	100	0.87	0.00		0.00	15.00	87.40		
M3	22	100	2.40	0.00		0.00	75.00	240.00		

SOFiSTiK AG - www.sofistik.de

Composite bridge 38+50+38, b=14.25m, 2x2HL1100R HISTAR460 , slab 0.30m C30/37

Cross section No. 62 - B/H = 117.4 / 150 cm

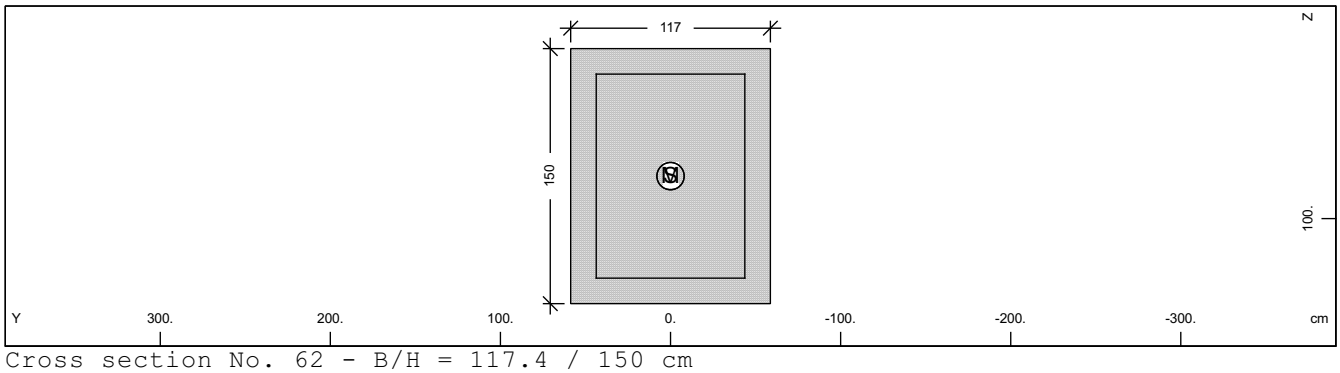

Cross section No. 62 - B/H = 117.4 / 150 cm

Static properties of cross section

Mat NoR	A[m2] It[m4]	Ay/Az/Ayz [m2]	Iy/Iz/Iyz [m4]	ys/zs [cm]	y/z-sc [cm]	modules [MPa]	gam [kN/m]
22	1.7610E+00		3.302E-01	0.00	0.00	32837	0.00
100	4.218E-01		2.023E-01	75.00	75.00	13682	

Additional static properties of cross section

Alfa-T [1/°K]	ymin ymax [cm]	zmin zmax [cm]	hymin hzmin [cm]	AK AB [m2]	MB	Tau-T Tau-B [1/m3]	Tau-Vy Tau-Vz [1/m2]
1.0E-05	-58.70	-75.00		9.889E-01	100	1.535E+00	8.518E-01
	58.70	75.00		1.761E+00			8.518E-01

Rectangular cross-section/T-beam

H/B [cm]	So/Su [cm]	Aso/u [cm2]	Ho/Bo [cm]	B-eff [cm]
150.00	15.00			32.93
117.40	15.00			

Additional Design Data

M	periphery-O/-I [m2/m] [m2/m]	deff [cm]	t-min [cm]	t-max [cm]	SMP [o/o]	thet-p [tm2/m]	thet-y [tm2/m]	thet-z [tm2/m]	thet-yz [tm2/m]
	5.348	65.86	117.40	150.00	0.0	0.000	0.000	0.000	

Reinforcement global values

Layer	mS	mR	area [cm2]	lower-A [cm2]	upper-A [cm2]	yL [cm]	zL [cm]	L-tors [cm]	N-pr [kN]	M-pr [kNm]
M1	22	100	0.87	0.00		0.00	135.00	87.40		
M2	22	100	0.87	0.00		0.00	15.00	87.40		
M3	22	100	2.40	0.00		0.00	75.00	240.00		

SOFiSTiK AG - www.sofistik.de

Composite bridge 38+50+38, b=14.25m, 2x2HL1100R HISTAR460 , slab 0.30m C30/37

Cross section No. 63 - B/H = 117.4 / 150 cm

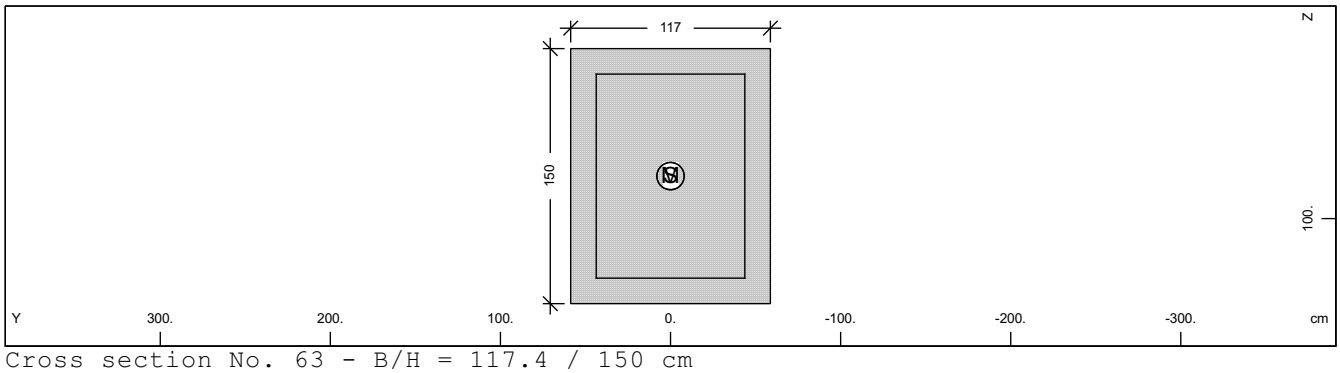

Cross section No. 63 - B/H = 117.4 / 150 cm

Static properties of cross section

Mat NoR	A[m2] It[m4]	Ay/Az/Ayz [m2]	Iy/Iz/Iyz [m4]	ys/zs [cm]	y/z-sc [cm]	modules [MPa]	gam [kN/m]
22	1.7610E+00		3.302E-01	0.00	0.00	32837	0.00
100	4.218E-01		2.023E-01	75.00	75.00	13682	

Additional static properties of cross section

Alfa-T [1/°K]	ymin ymax [cm]	zmin zmax [cm]	hymin hzmin [cm]	AK AB [m2]	MB	Tau-T Tau-B [1/m3]	Tau-Vy Tau-Vz [1/m2]
1.0E-05	-58.70	-75.00		9.889E-01	100	1.535E+00	8.518E-01
	58.70	75.00		1.761E+00			8.518E-01

Rectangular cross-section/T-beam

H/B [cm]	So/Su [cm]	Aso/u [cm2]	Ho/Bo [cm]	B-eff [cm]
150.00	15.00			32.93
117.40	15.00			

Additional Design Data

M	periphery-O/-I [m2/m] [m2/m]	deff [cm]	t-min [cm]	t-max [cm]	SMP [o/o]	thet-p [tm2/m]	thet-y [tm2/m]	thet-z [tm2/m]	thet-yz [tm2/m]
	5.348	65.86	117.40	150.00	0.0	0.000	0.000	0.000	

Reinforcement global values

Layer	mS	mR	area [cm2]	lower-A [cm2]	upper-A [cm2]	yL [cm]	zL [cm]	L-tors [cm]	N-pr [kN]	M-pr [kNm]
M1	22	100	0.87	0.00		0.00	135.00	87.40		
M2	22	100	0.87	0.00		0.00	15.00	87.40		
M3	22	100	2.40	0.00		0.00	75.00	240.00		

SOFiSTiK AG - www.sofistik.de

Composite bridge 38+50+38, b=14.25m, 2x2HL1100R HISTAR460 , slab 0.30m C30/37

Cross section No. 64 - B/H = 117.4 / 150 cm

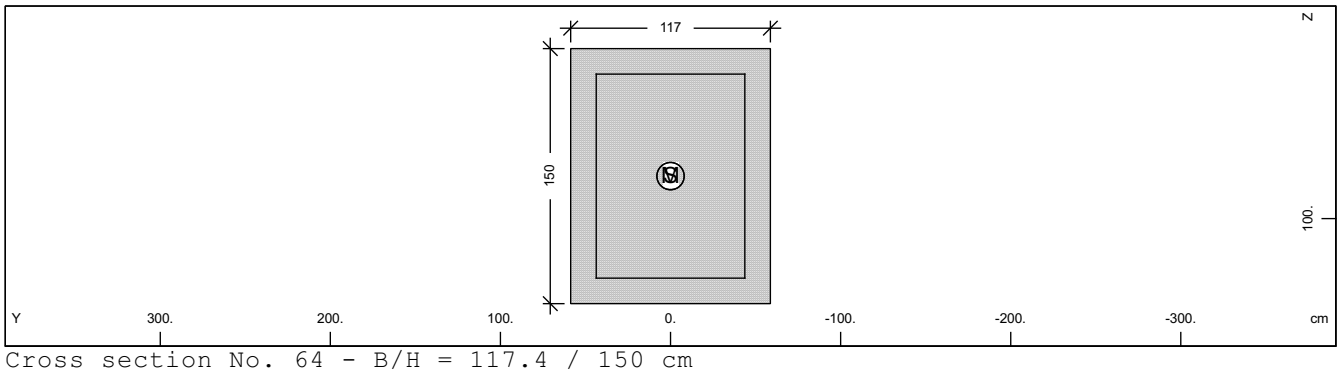

Cross section No. 64 - B/H = 117.4 / 150 cm

Static properties of cross section

Mat NoR	A[m2] It[m4]	Ay/Az/Ayz [m2]	Iy/Iz/Iyz [m4]	ys/zs [cm]	y/z-sc [cm]	modules [MPa]	gam [kN/m]
22	1.7610E+00		3.302E-01	0.00	0.00	32837	0.00
100	4.218E-01		2.023E-01	75.00	75.00	13682	

Additional static properties of cross section

Alfa-T [1/°K]	ymin ymax [cm]	zmin zmax [cm]	hymin hzmin [cm]	AK AB [m2]	MB	Tau-T Tau-B [1/m3]	Tau-Vy Tau-Vz [1/m2]
1.0E-05	-58.70	-75.00		9.889E-01	100	1.535E+00	8.518E-01
	58.70	75.00		1.761E+00			8.518E-01

Rectangular cross-section/T-beam

H/B [cm]	So/Su [cm]	Aso/u [cm2]	Ho/Bo [cm]	B-eff [cm]
150.00	15.00			32.93
117.40	15.00			

Additional Design Data

M	periphery-O/-I [m2/m] [m2/m]	deff [cm]	t-min [cm]	t-max [cm]	SMP [o/o]	thet-p [tm2/m]	thet-y [tm2/m]	thet-z [tm2/m]	thet-yz [tm2/m]
	5.348	65.86	117.40	150.00	0.0	0.000	0.000	0.000	

Reinforcement global values

Layer	mS	mR	area [cm2]	lower-A [cm2]	upper-A [cm2]	yL [cm]	zL [cm]	L-tors [cm]	N-pr [kN]	M-pr [kNm]
M1	22	100	0.87	0.00		0.00	135.00	87.40		
M2	22	100	0.87	0.00		0.00	15.00	87.40		
M3	22	100	2.40	0.00		0.00	75.00	240.00		

SOFiSTiK AG - www.sofistik.de

Composite bridge 38+50+38, b=14.25m, 2x2HL1100R HISTAR460 , slab 0.30m C30/37

Cross section No. 65 - B/H = 117.4 / 150 cm

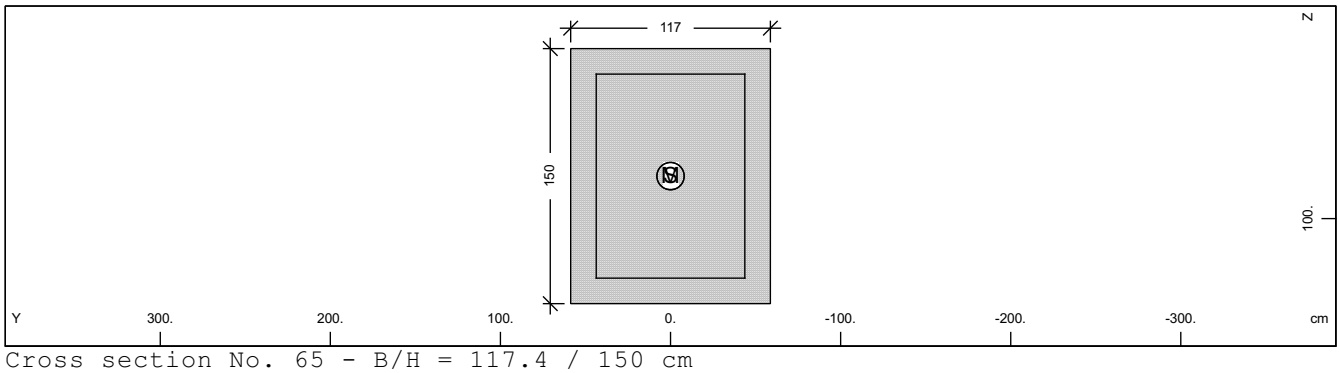

Cross section No. 65 - B/H = 117.4 / 150 cm

Static properties of cross section

Mat NoR	A[m2] It[m4]	Ay/Az/Ayz [m2]	Iy/Iz/Iyz [m4]	ys/zs [cm]	y/z-sc [cm]	modules [MPa]	gam [kN/m]
22	1.7610E+00		3.302E-01	0.00	0.00	32837	0.00
100	4.218E-01		2.023E-01	75.00	75.00	13682	

Additional static properties of cross section

Alfa-T [1/°K]	ymin ymax [cm]	zmin zmax [cm]	hymin hzmin [cm]	AK AB [m2]	MB	Tau-T Tau-B [1/m3]	Tau-Vy Tau-Vz [1/m2]
1.0E-05	-58.70	-75.00		9.889E-01	100	1.535E+00	8.518E-01
	58.70	75.00		1.761E+00			8.518E-01

Rectangular cross-section/T-beam

H/B [cm]	So/Su [cm]	Aso/u [cm2]	Ho/Bo [cm]	B-eff [cm]
150.00	15.00			32.93
117.40	15.00			

Additional Design Data

M	periphery-O/-I [m2/m] [m2/m]	deff [cm]	t-min [cm]	t-max [cm]	SMP [o/o]	thet-p [tm2/m]	thet-y [tm2/m]	thet-z [tm2/m]	thet-yz [tm2/m]
	5.348	65.86	117.40	150.00	0.0	0.000	0.000	0.000	

Reinforcement global values

Layer	mS	mR	area [cm2]	lower-A [cm2]	upper-A [cm2]	yL [cm]	zL [cm]	L-tors [cm]	N-pr [kN]	M-pr [kNm]
M1	22	100	0.87	0.00		0.00	135.00	87.40		
M2	22	100	0.87	0.00		0.00	15.00	87.40		
M3	22	100	2.40	0.00		0.00	75.00	240.00		

SOFiSTiK AG - www.sofistik.de

Composite bridge 38+50+38, b=14.25m, 2x2HL1100R HISTAR460 , slab 0.30m C30/37

Cross section No. 66 - B/H = 117.4 / 150 cm

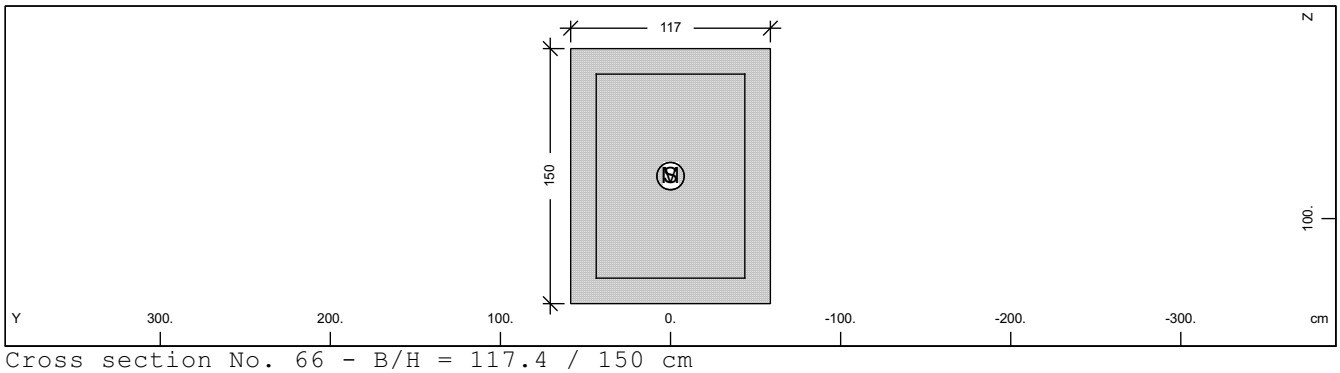

Cross section No. 66 - B/H = 117.4 / 150 cm

Static properties of cross section

Mat NoR	A[m2] It[m4]	Ay/Az/Ayz [m2]	Iy/Iz/Iyz [m4]	ys/zs [cm]	y/z-sc [cm]	modules [MPa]	gam [kN/m]
22	1.7610E+00		3.302E-01	0.00	0.00	32837	0.00
100	4.218E-01		2.023E-01	75.00	75.00	13682	

Additional static properties of cross section

Alfa-T [1/°K]	ymin ymax [cm]	zmin zmax [cm]	hymin hzmin [cm]	AK AB [m2]	MB	Tau-T Tau-B [1/m3]	Tau-Vy Tau-Vz [1/m2]
1.0E-05	-58.70	-75.00		9.889E-01	100	1.535E+00	8.518E-01
	58.70	75.00		1.761E+00			8.518E-01

Rectangular cross-section/T-beam

H/B [cm]	So/Su [cm]	Aso/u [cm2]	Ho/Bo [cm]	B-eff [cm]
150.00	15.00			32.93
117.40	15.00			

Additional Design Data

M	periphery-O/-I [m2/m] [m2/m]	deff [cm]	t-min [cm]	t-max [cm]	SMP [o/o]	thet-p [tm2/m]	thet-y [tm2/m]	thet-z [tm2/m]	thet-yz [tm2/m]
	5.348	65.86	117.40	150.00	0.0	0.000	0.000	0.000	

Reinforcement global values

Layer	mS	mR	area [cm2]	lower-A [cm2]	upper-A [cm2]	yL [cm]	zL [cm]	L-tors [cm]	N-pr [kN]	M-pr [kNm]
M1	22	100	0.87	0.00		0.00	135.00	87.40		
M2	22	100	0.87	0.00		0.00	15.00	87.40		
M3	22	100	2.40	0.00		0.00	75.00	240.00		

SOFiSTiK AG - www.sofistik.de

Composite bridge 38+50+38, b=14.25m, 2x2HL1100R HISTAR460 , slab 0.30m C30/37

Cross section No. 67 - B/H = 117.4 / 150 cm

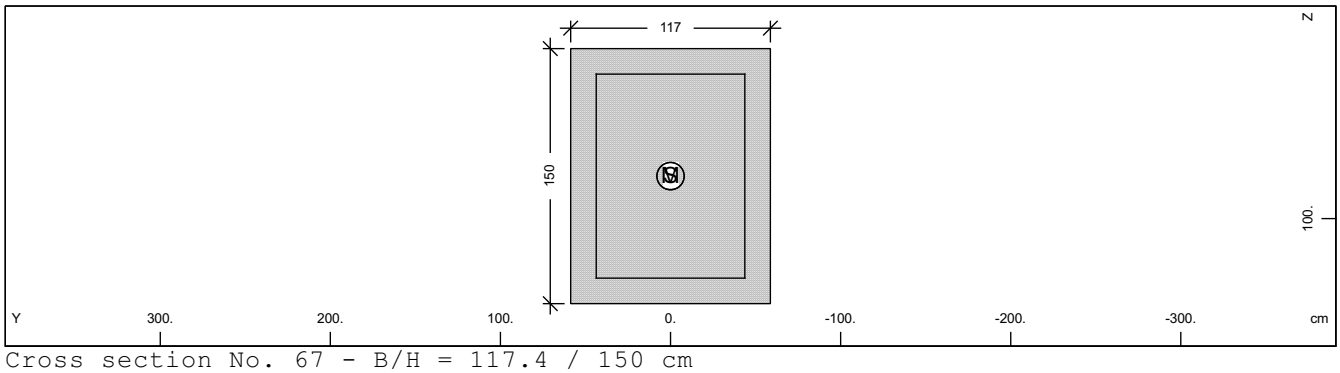

Cross section No. 67 - B/H = 117.4 / 150 cm

Static properties of cross section

Mat NoR	A[m2] It[m4]	Ay/Az/Ayz [m2]	Iy/Iz/Iyz [m4]	ys/zs [cm]	y/z-sc [cm]	modules [MPa]	gam [kN/m]
22	1.7610E+00		3.302E-01	0.00	0.00	32837	0.00
100	4.218E-01		2.023E-01	75.00	75.00	13682	

Additional static properties of cross section

Alfa-T [1/°K]	ymin ymax [cm]	zmin zmax [cm]	hymin hzmin [cm]	AK AB [m2]	MB	Tau-T Tau-B [1/m3]	Tau-Vy Tau-Vz [1/m2]
1.0E-05	-58.70	-75.00		9.889E-01	100	1.535E+00	8.518E-01
	58.70	75.00		1.761E+00			8.518E-01

Rectangular cross-section/T-beam

H/B [cm]	So/Su [cm]	Aso/u [cm2]	Ho/Bo [cm]	B-eff [cm]
150.00	15.00			32.93
117.40	15.00			

Additional Design Data

M	periphery-O/-I [m2/m] [m2/m]	deff [cm]	t-min [cm]	t-max [cm]	SMP [o/o]	thet-p [tm2/m]	thet-y [tm2/m]	thet-z [tm2/m]	thet-yz [tm2/m]
	5.348	65.86	117.40	150.00	0.0	0.000	0.000	0.000	

Reinforcement global values

Layer	mS	mR	area [cm2]	lower-A [cm2]	upper-A [cm2]	yL [cm]	zL [cm]	L-tors [cm]	N-pr [kN]	M-pr [kNm]
M1	22	100	0.87	0.00		0.00	135.00	87.40		
M2	22	100	0.87	0.00		0.00	15.00	87.40		
M3	22	100	2.40	0.00		0.00	75.00	240.00		

SOFiSTiK AG - www.sofistik.de

Composite bridge 38+50+38, b=14.25m, 2x2HL1100R HISTAR460 , slab 0.30m C30/37

Cross section No. 68 - B/H = 117.4 / 150 cm

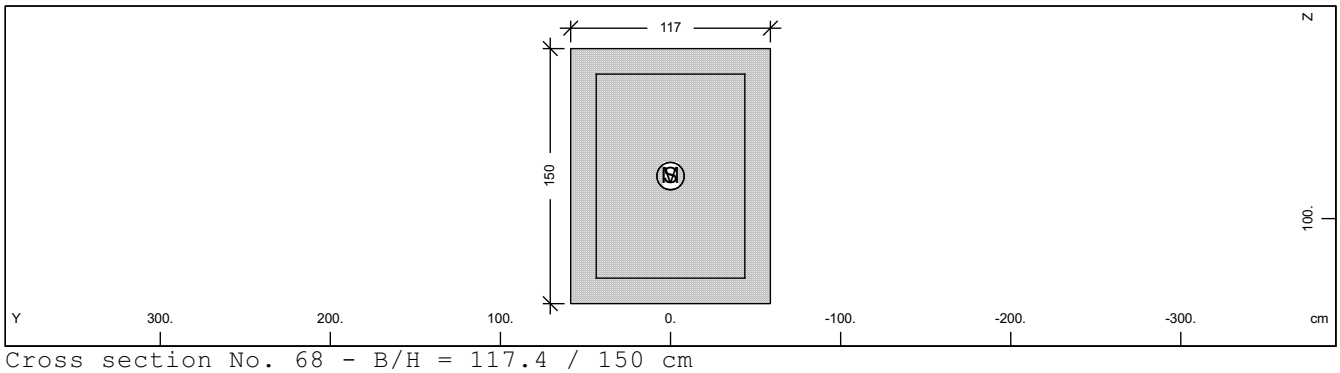

Cross section No. 68 - B/H = 117.4 / 150 cm

Static properties of cross section

Mat NoR	A[m2] It[m4]	Ay/Az/Ayz [m2]	Iy/Iz/Iyz [m4]	ys/zs [cm]	y/z-sc [cm]	modules [MPa]	gam [kN/m]
22	1.7610E+00		3.302E-01	0.00	0.00	32837	0.00
100	4.218E-01		2.023E-01	75.00	75.00	13682	

Additional static properties of cross section

Alfa-T [1/°K]	ymin ymax [cm]	zmin zmax [cm]	hymin hzmin [cm]	AK AB [m2]	MB	Tau-T Tau-B [1/m3]	Tau-Vy Tau-Vz [1/m2]
1.0E-05	-58.70	-75.00		9.889E-01	100	1.535E+00	8.518E-01
	58.70	75.00		1.761E+00			8.518E-01

Rectangular cross-section/T-beam

H/B [cm]	So/Su [cm]	Aso/u [cm2]	Ho/Bo [cm]	B-eff [cm]
150.00	15.00			32.93
117.40	15.00			

Additional Design Data

M	periphery-O/-I [m2/m] [m2/m]	deff [cm]	t-min [cm]	t-max [cm]	SMP [o/o]	thet-p [tm2/m]	thet-y [tm2/m]	thet-z [tm2/m]	thet-yz [tm2/m]
	5.348	65.86	117.40	150.00	0.0	0.000	0.000	0.000	

Reinforcement global values

Layer	mS	mR	area [cm2]	lower-A [cm2]	upper-A [cm2]	yL [cm]	zL [cm]	L-tors [cm]	N-pr [kN]	M-pr [kNm]
M1	22	100	0.87	0.00		0.00	135.00	87.40		
M2	22	100	0.87	0.00		0.00	15.00	87.40		
M3	22	100	2.40	0.00		0.00	75.00	240.00		

SOFiSTiK AG - www.sofistik.de

Composite bridge 38+50+38, b=14.25m, 2x2HL1100R HISTAR460 , slab 0.30m C30/37

Cross section No. 69 - B/H = 117.4 / 150 cm

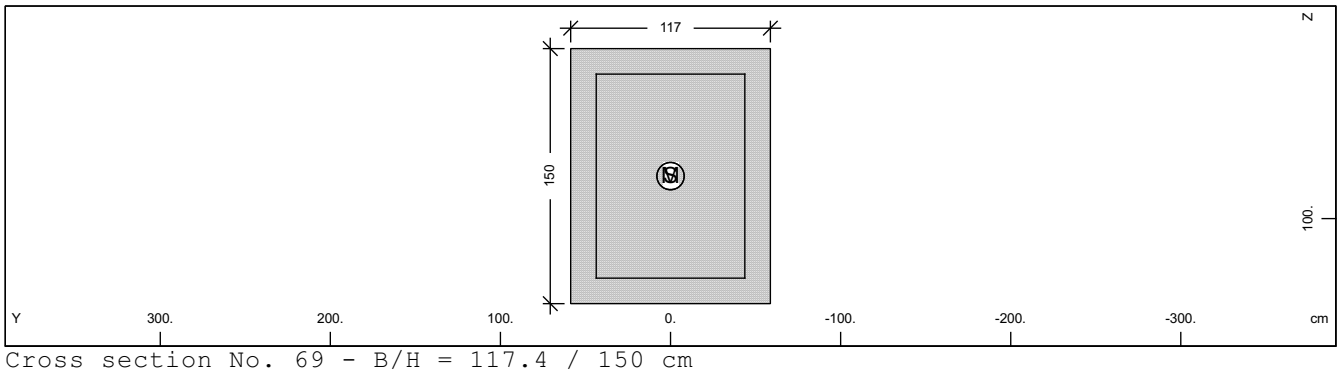

Cross section No. 69 - B/H = 117.4 / 150 cm

Static properties of cross section

Mat NoR	A[m2] It[m4]	Ay/Az/Ayz [m2]	Iy/Iz/Iyz [m4]	ys/zs [cm]	y/z-sc [cm]	modules [MPa]	gam [kN/m]
22	1.7610E+00		3.302E-01	0.00	0.00	32837	0.00
100	4.218E-01		2.023E-01	75.00	75.00	13682	

Additional static properties of cross section

Alfa-T [1/°K]	ymin ymax [cm]	zmin zmax [cm]	hymin hzmin [cm]	AK AB [m2]	MB	Tau-T Tau-B [1/m3]	Tau-Vy Tau-Vz [1/m2]
1.0E-05	-58.70	-75.00		9.889E-01	100	1.535E+00	8.518E-01
	58.70	75.00		1.761E+00			8.518E-01

Rectangular cross-section/T-beam

H/B [cm]	So/Su [cm]	Aso/u [cm2]	Ho/Bo [cm]	B-eff [cm]
150.00	15.00			32.93
117.40	15.00			

Additional Design Data

M	periphery-O/-I [m2/m] [m2/m]	deff [cm]	t-min [cm]	t-max [cm]	SMP [o/o]	thet-p [tm2/m]	thet-y [tm2/m]	thet-z [tm2/m]	thet-yz [tm2/m]
	5.348	65.86	117.40	150.00	0.0	0.000	0.000	0.000	

Reinforcement global values

Layer	mS	mR	area [cm2]	lower-A [cm2]	upper-A [cm2]	yL [cm]	zL [cm]	L-tors [cm]	N-pr [kN]	M-pr [kNm]
M1	22	100	0.87	0.00		0.00	135.00	87.40		
M2	22	100	0.87	0.00		0.00	15.00	87.40		
M3	22	100	2.40	0.00		0.00	75.00	240.00		

SOFiSTiK AG - www.sofistik.de

Composite bridge 38+50+38, b=14.25m, 2x2HL1100R HISTAR460 , slab 0.30m C30/37

Cross section No. 151 - VFT

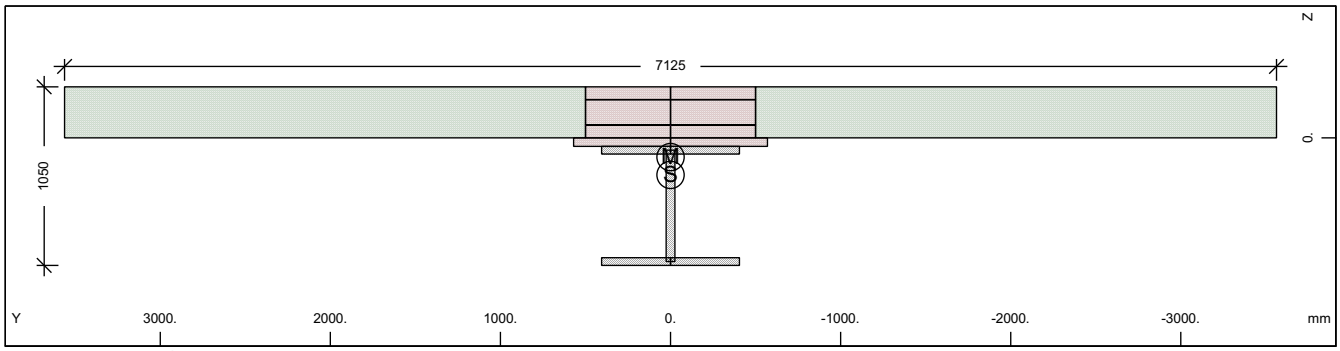

Cross section No. 151 - VFT

Static properties of cross section

Mat NoR	A[cm2] It[cm4]	Ay/Az/Ayz [cm2]	Iy/Iz/Iyz [cm4]	ys/zs [mm]	y/z-sc [mm]	modules [N/mm2]	gam [kN/m]
1	1642.18	1074.80	1946674.3	0.0	0.0	210000	63.26
	6270.0	462.67	897984.0	217.7	112.9	80769	

Additional static properties of cross section

Alfa-T [1/°K]	ymin ymax [mm]	zmin zmax [mm]	hymin hzmin [mm]	AK AB [cm2]	MB	Tau-T Tau-B [1/m3]	Tau-Vy Tau-Vz [1/m2]
1.2E-05	-3562.5	-517.7		2.115E+03		3.225E+01	1.326E+01
	3562.5	532.3		2.195E+04		4.834E+01	2.503E+01

Section values for warping

Wmin[cm2]	Wmax[cm2]	CM[cm6]	CMS[cm4]	ASwyy[cm6]	ASwzz[cm6]	ry[mm]	rz[mm]
-9367.06	9367.06	1042624125.	1423880.6	2.35	5.10	0.0	321.1

Partial cross sections

Mat NoR	A[cm2] It[cm4]	Ay/Az/Ayz [cm2]	Iy/Iz/Iyz [cm4]	ys/zs [mm]	modules [N/mm2]	gam [kN/m]
1	1069.60	374.63	903669.7	0.0	210000	8.40
	7990.7	428.98	398580.9	400.0	80769	
30	3570.00	4030.92	146691.2	0.0	32837	8.93
	904750.1	193.18	3117310.1	-122.1	13682	
31	18375.00	41481168.	0.0	0.0	0	45.94
	5512501.0	37388.97901762872.		-150.0	0	
300	15.07	17.99	847.8	0.0	200000	0.00
	0.0	1.01	12560.0	-150.0	76923	

Design values of cross section

Mat NoR	A[cm2] It[cm4]	Ay/Az/Ayz [cm2]	Iy/Iz/Iyz [cm4]	ys/zs [mm]	modules [N/mm2]	gam [kN/m]
1	1511.92	915.42	1777982.7	0.0	182609	63.26
	6270.0	455.03	784247.7	247.0	70234	

Design forces and moments
(C/E = characteristic plastic/elastic, D=plast.Design, F=elast. Design)

	N[kN]	Vy[kN]	Vz[kN]	Mt[kNm]	My[kNm]	Mz[kNm]	y[mm]	z[mm]	BUCK
C	36585.2	50744.10	35388.07	99055.71	22135.36	59290.14	297.4	-132.	c d
C	-60238.3				34632.55	0.00	0.0	217.7	COMB
C	-32917.5				0.00	62637.10	0.0	0.0	COMB
C	-102420.	50744.10	35388.07	99055.72	-10272.8	-59290.1	-297.	378.2	
C	-5596.7				-10722.3	0.00	0.0	217.7	COMB
C	-32917.5				0.00	-62637.1	0.0	0.0	COMB
E	55012.9	5833.03	7727.07	523.56	7213.94	3022.57	0.0	217.7	
E	-31506.7	5833.03	7727.07	523.56	-12252.0	-3022.57	0.0	217.7	
D	31813.2	36778.50	25464.89	66149.80	18453.32	41510.95	197.9	-81.3	
D	-39023.3				25263.91	0.00	0.0	217.7	COMB
D	-21945.0				0.00	42829.79	0.0	0.0	COMB
D	-75703.2	36778.50	25464.89	66149.80	-8932.85	-41511.0	-198.	378.3	

SOFiSTiK AG - www.sofistik.de

Composite bridge 38+50+38, b=14.25m, 2x2HL1100R HISTAR460 , slab 0.30m C30/37

Design forces and moments
(C/E = characteristic plastic/elastic, D=plast.Design, F=elast. Design)

	N[kN]	Vy[kN]	Vz[kN]	Mt[kNm]	My[kNm]	Mz[kNm]	y[mm]	z[mm]	BUCK
D	-4866.7				-9323.74	0.00	0.0	217.7	COMB
D	-21945.0				0.00	-42829.8	0.0	0.0	COMB
F	47837.3	3888.69	6719.19	349.04	4809.30	2015.05	0.0	217.7	
F	-21004.4	3888.69	6719.19	349.04	-10653.9	-2015.05	0.0	217.7	

Additional Design Data

M	periphery-O/-I [m2/m]	[m2/m]	deff [mm]	t-min [mm]	t-max [mm]	SMP [o/o]	thet-p [tm2/m]	thet-y [tm2/m]	thet-z [tm2/m]	thet-yz [tm2/m]
	25.080		13.1	0.8	300.0	0.0	22.945	0.292	22.653	
1	4.550		47.0	45.0	52.0	0.0	0.102	0.071	0.031	
30	4.280		600.0	50.0	300.0	0.0	0.082	0.004	0.078	
31	12.250		300.0	300.0	300.0	0.0	22.544		22.544	
**	4.000		0.8	0.8	0.8	0.0	0.000	0.000	0.000	

Cross section No. 151.1 = CS 1 - steel alone

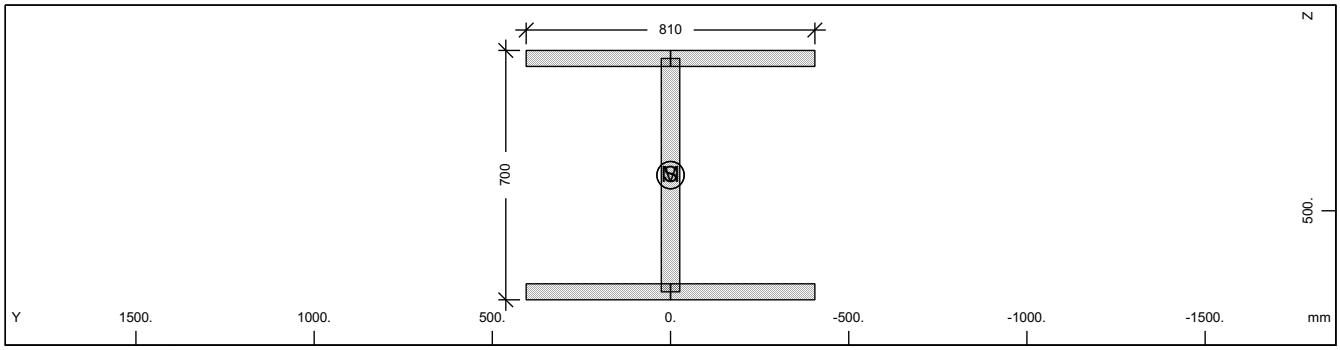

Cross section No. 151

Static properties of cross section

Mat NoR	A[cm2] It[cm4]	Ay/Az/Ayz [cm2]	Iy/Iz/Iyz [cm4]	ys/zs [mm]	modules [N/mm2]	gam [kN/m]
1	1069.60	607.50	903669.7	0.0	210000	8.40
	6270.0	288.17	398580.9	400.0	80769	

Additional static properties of cross section

Alfa-T [1/°K]	ymin ymax [mm]	zmin zmax [mm]	hymin hzmin [mm]	AK AB [cm2]	MB	Tau-T Tau-B [1/m3]	Tau-Vy Tau-Vz [1/m2]
1.2E-05	-405.0	-350.0		5.910E+02		6.508E+01	2.058E+01
	405.0	350.0				6.283E+01	3.134E+01

Section values for warping

Wmin[cm2]	Wmax[cm2]	CM[cm6]	CMS[cm4]	ASwyy[cm6]	ASwzz[cm6]	ry[mm]	rz[mm]
-1326.38	1326.38	427502762.	651581.6	-3.01	-6.82	0.0	0.0

Design values of cross section

Mat NoR	A[cm2] It[cm4]	Ay/Az/Ayz [cm2]	Iy/Iz/Iyz [cm4]	ys/zs [mm]	modules [N/mm2]	gam [kN/m]
1	1069.60	607.50	903669.7	0.0	182609	8.40
	6270.0	288.17	398580.9	400.0	70234	

Design forces and moments
(C/E = characteristic plastic/elastic, D=plast.Design, F=elast. Design)

	N[kN]	Vy[kN]	Vz[kN]	Mt[kNm]	My[kNm]	Mz[kNm]	y[mm]	z[mm]	BUCK
C	35831.6	14099.76	6587.62	488.52	9866.45	5093.69	0.0	400.0	c d
C	0.0				0.00	0.00	0.0	0.0	COMB
E	35831.6	9399.84	6171.79	297.21	8649.41	3296.90	0.0	400.0	
D	31157.9	12260.66	5728.37	424.80	8579.52	4429.29	0.0	400.0	
D	0.0				0.00	0.00	0.0	0.0	COMB
F	31157.9	8173.78	5366.77	258.44	7521.22	2866.87	0.0	400.0	

SOFiSTiK AG - www.sofistik.de

Composite bridge 38+50+38, b=14.25m, 2x2HL1100R HISTAR460 , slab 0.30m C30/37

Additional Design Data

M	periphery-O/-I [m2/m]	[m2/m]	deff [mm]	t-min [mm]	t-max [mm]	SMP [o/o]	thet-p [tm2/m]	thet-y [tm2/m]	thet-z [tm2/m]	thet-yz [tm2/m]
	4.550		47.0	45.0	52.0	0.0	0.102	0.071	0.031	

Cross section No. 151.2 = CS 10 - prefab. slab C1

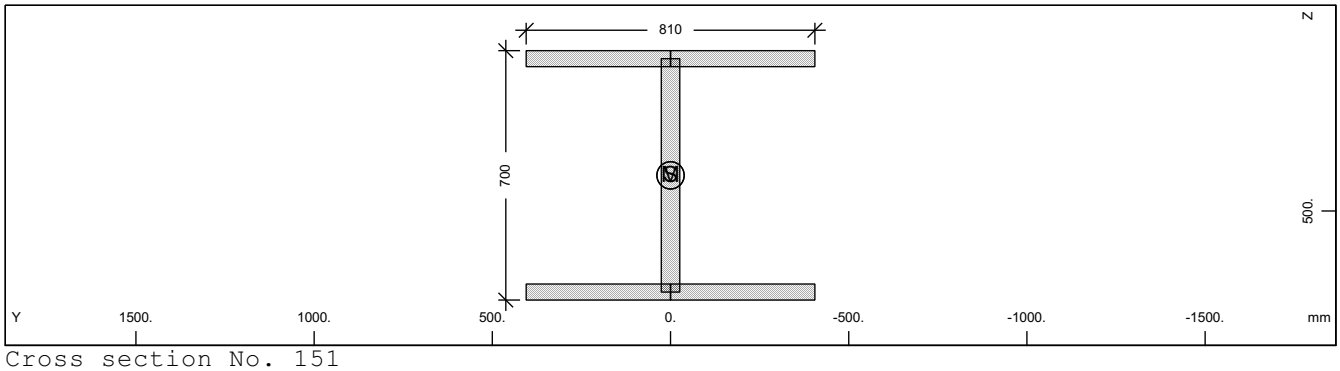

Cross section No. 151

Static properties of cross section

Mat NoR	A[cm2] It[cm4]	Ay/Az/Ayz [cm2]	Iy/Iz/Iyz [cm4]	ys/zs [mm]	modules [N/mm2]	gam [kN/m]
1	1069.60	607.50	903669.7	0.0	210000	8.40
	6270.0	288.17	398580.9	400.0	80769	

Additional static properties of cross section

Alfa-T [1/°K]	ymin ymax [mm]	zmin zmax [mm]	hymin hzmin [mm]	AK AB [cm2]	MB	Tau-T Tau-B [1/m3]	Tau-Vy Tau-Vz [1/m2]
1.2E-05	-405.0	-350.0		5.910E+02		6.508E+02	2.058E+01
	405.0	350.0				6.283E+01	3.134E+01

Section values for warping

Wmin[cm2]	Wmax[cm2]	CM[cm6]	CMS[cm4]	ASwyy[cm6]	ASwzz[cm6]	ry[mm]	rz[mm]
-1326.38	1326.38	427502762.	651581.6	-3.01	-6.82	0.0	0.0

Design values of cross section

Mat NoR	A[cm2] It[cm4]	Ay/Az/Ayz [cm2]	Iy/Iz/Iyz [cm4]	ys/zs [mm]	modules [N/mm2]	gam [kN/m]
1	1069.60	607.50	903669.7	0.0	182609	8.40
	6270.0	288.17	398580.9	400.0	70234	

Design forces and moments
(C/E = characteristic plastic/elastic, D=plast.Design, F=elast. Design)

	N[kN]	Vy[kN]	Vz[kN]	Mt[kNm]	My[kNm]	Mz[kNm]	y[mm]	z[mm]	BUCK
C	35831.6	14099.76	6587.62	488.52	9866.45	5093.69	0.0	400.0	c d
C	0.0				0.00	0.00	0.0	0.0	COMB
E	35831.6	9399.84	6171.79	297.21	8649.41	3296.90	0.0	400.0	
D	31157.9	12260.66	5728.37	424.80	8579.52	4429.29	0.0	400.0	
D	0.0				0.00	0.00	0.0	0.0	COMB
F	31157.9	8173.78	5366.77	258.44	7521.22	2866.87	0.0	400.0	

Additional Design Data

M	periphery-O/-I [m2/m]	[m2/m]	deff [mm]	t-min [mm]	t-max [mm]	SMP [o/o]	thet-p [tm2/m]	thet-y [tm2/m]	thet-z [tm2/m]	thet-yz [tm2/m]
	4.550		47.0	45.0	52.0	0.0	0.102	0.071	0.031	

SOFiSTiK AG - www.sofistik.de

Composite bridge 38+50+38, b=14.25m, 2x2HL1100R HISTAR460 , slab 0.30m C30/37

Cross section No. 151.3 = CS 20 - in-situ conc:C2

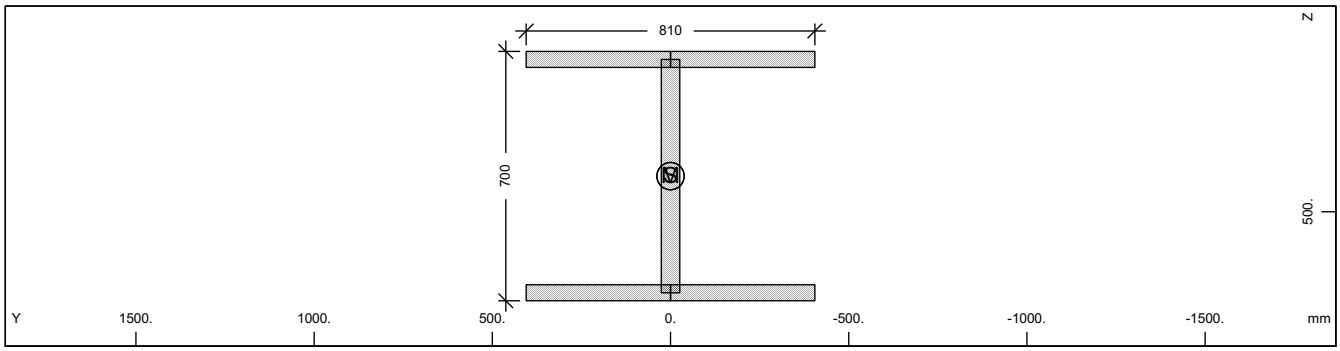

Cross section No. 151

Static properties of cross section

Mat NoR	A[cm2] It[cm4]	Ay/Az/Ayz [cm2]	Iy/Iz/Iyz [cm4]	ys/zs [mm]	modules [N/mm2]	gam [kN/m]
1	1069.60	607.50	903669.7	0.0	210000	8.40
	6270.0	288.17	398580.9	400.0	80769	

Additional static properties of cross section

Alfa-T [1/°K]	ymin ymax [mm]	zmin zmax [mm]	hymin hzmin [mm]	AK AB [cm2]	MB	Tau-T Tau-B [1/m3]	Tau-Vy Tau-Vz [1/m2]
1.2E-05	-405.0	-350.0		5.910E+02		6.508E+02	2.058E+01
	405.0	350.0				6.283E+01	3.134E+01

Section values for warping

Wmin[cm2]	Wmax[cm2]	CM[cm6]	CMS[cm4]	ASwyy[cm6]	ASwzz[cm6]	ry[mm]	rz[mm]
-1326.38	1326.38	427502762.	651581.6	-3.01	-6.82	0.0	0.0

Design values of cross section

Mat NoR	A[cm2] It[cm4]	Ay/Az/Ayz [cm2]	Iy/Iz/Iyz [cm4]	ys/zs [mm]	modules [N/mm2]	gam [kN/m]
1	1069.60	607.50	903669.7	0.0	182609	8.40
	6270.0	288.17	398580.9	400.0	70234	

Design forces and moments
(C/E = characteristic plastic/elastic, D=plast.Design, F=elast. Design)

	N[kN]	Vy[kN]	Vz[kN]	Mt[kNm]	My[kNm]	Mz[kNm]	y[mm]	z[mm]	BUCK
C	35831.6	14099.76	6587.62	488.52	9866.45	5093.69	0.0	400.0	c d
C	0.0				0.00	0.00	0.0	0.0	COMB
E	35831.6	9399.84	6171.79	297.21	8649.41	3296.90	0.0	400.0	
D	31157.9	12260.66	5728.37	424.80	8579.52	4429.29	0.0	400.0	
D	0.0				0.00	0.00	0.0	0.0	COMB
F	31157.9	8173.78	5366.77	258.44	7521.22	2866.87	0.0	400.0	

Additional Design Data

M	periphery-O/-I [m2/m] [m2/m]	deff [mm]	t-min [mm]	t-max [mm]	SMP [o/o]	thet-p [tm2/m]	thet-y [tm2/m]	thet-z [tm2/m]	thet-yz [tm2/m]
	4.550	47.0	45.0	52.0	0.0	0.102	0.071	0.031	

SOFiSTiK AG - www.sofistik.de

Composite bridge 38+50+38, b=14.25m, 2x2HL1100R HISTAR460 , slab 0.30m C30/37

Cross section No. 151.4 = CS 21 - reinf active:C2

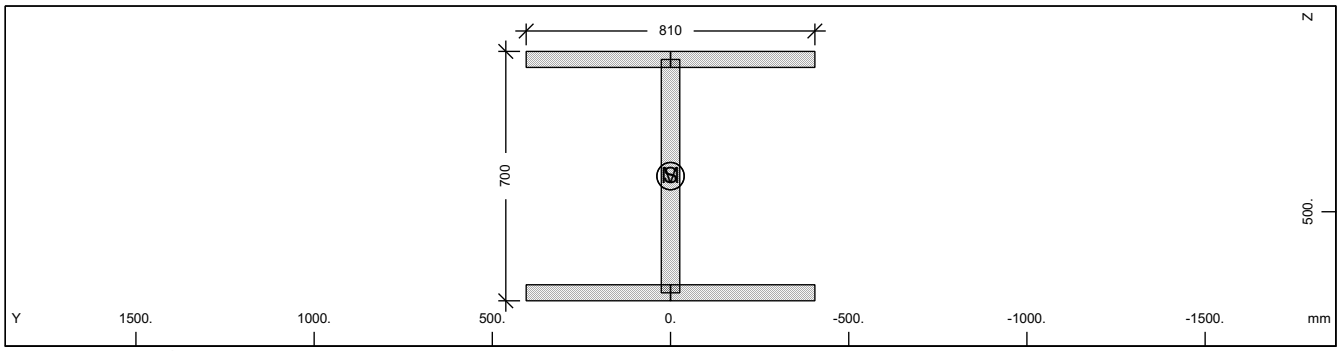

Cross section No. 151

Static properties of cross section

Mat NoR	A[cm2] It[cm4]	Ay/Az/Ayz [cm2]	Iy/Iz/Iyz [cm4]	ys/zs [mm]	modules [N/mm2]	gam [kN/m]
1	1069.60	607.50	903669.7	0.0	210000	8.40
	6270.0	288.17	398580.9	400.0	80769	

Additional static properties of cross section

Alfa-T [1/°K]	ymin ymax [mm]	zmin zmax [mm]	hymin hzmin [mm]	AK AB [cm2]	MB	Tau-T Tau-B [1/m3]	Tau-Vy Tau-Vz [1/m2]
1.2E-05	-405.0	-350.0		5.910E+02		6.508E+02	2.058E+01
	405.0	350.0				6.283E+01	3.134E+01

Section values for warping

Wmin[cm2]	Wmax[cm2]	CM[cm6]	CMS[cm4]	ASwyy[cm6]	ASwzz[cm6]	ry[mm]	rz[mm]
-1326.38	1326.38	427502762.	651581.6	-3.01	-6.82	0.0	0.0

Design values of cross section

Mat NoR	A[cm2] It[cm4]	Ay/Az/Ayz [cm2]	Iy/Iz/Iyz [cm4]	ys/zs [mm]	modules [N/mm2]	gam [kN/m]
1	1069.60	607.50	903669.7	0.0	182609	8.40
	6270.0	288.17	398580.9	400.0	70234	

Design forces and moments
(C/E = characteristic plastic/elastic, D=plast.Design, F=elast. Design)

	N[kN]	Vy[kN]	Vz[kN]	Mt[kNm]	My[kNm]	Mz[kNm]	y[mm]	z[mm]	BUCK
C	35831.6	14099.76	6587.62	488.52	9866.45	5093.69	0.0	400.0	c d
C	0.0				0.00	0.00	0.0	0.0	COMB
E	35831.6	9399.84	6171.79	297.21	8649.41	3296.90	0.0	400.0	
D	31157.9	12260.66	5728.37	424.80	8579.52	4429.29	0.0	400.0	
D	0.0				0.00	0.00	0.0	0.0	COMB
F	31157.9	8173.78	5366.77	258.44	7521.22	2866.87	0.0	400.0	

Additional Design Data

M	periphery-O/-I [m2/m] [m2/m]	deff [mm]	t-min [mm]	t-max [mm]	SMP [o/o]	thet-p [tm2/m]	thet-y [tm2/m]	thet-z [tm2/m]	thet-yz [tm2/m]
	4.550	47.0	45.0	52.0	0.0	0.102	0.071	0.031	

SOFiSTiK AG - www.sofistik.de

Composite bridge 38+50+38, b=14.25m, 2x2HL1100R HISTAR460 , slab 0.30m C30/37

Cross section No. 151.5 = CS 30 - in-situ conc:C3

Cross section No. 152 - VFT

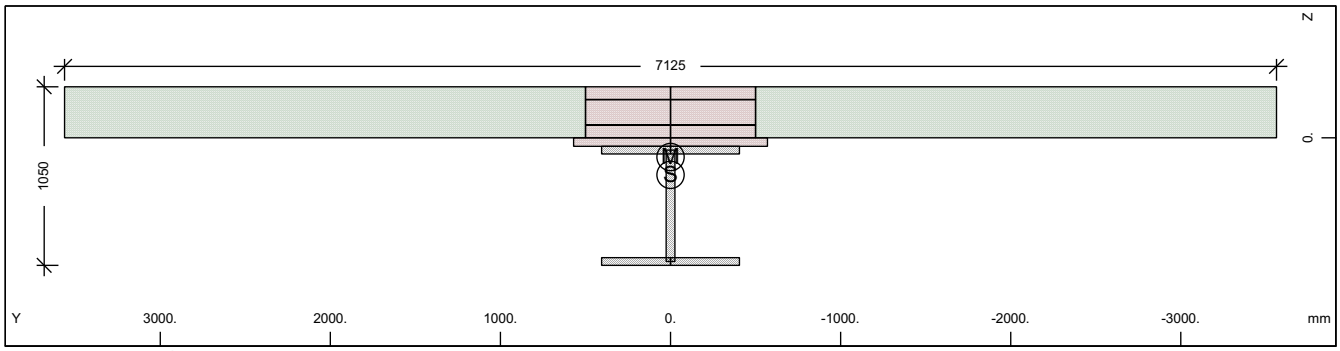

Cross section No. 152 - VFT

Static properties of cross section

Mat NoR	A[cm2] It[cm4]	Ay/Az/Ayz [cm2]	Iy/Iz/Iyz [cm4]	ys/zs [mm]	y/z-sc [mm]	modules [N/mm2]	gam [kN/m]
1	1642.18	1074.80	1946674.3	0.0	0.0	210000	63.26
	6270.0	462.67	897984.0	217.7	112.9	80769	

Additional static properties of cross section

Alfa-T [1/°K]	ymin ymax [mm]	zmin zmax [mm]	hymin hzmin [mm]	AK AB [cm2]	MB	Tau-T Tau-B [1/m3]	Tau-Vy Tau-Vz [1/m2]
1.2E-05	-3562.5	-517.7		2.115E+03		3.225E+01	1.326E+01
	3562.5	532.3		2.195E+04		6.283E+01	2.503E+01

Section values for warping

Wmin[cm2]	Wmax[cm2]	CM[cm6]	CMS[cm4]	ASwyy[cm6]	ASwzz[cm6]	ry[mm]	rz[mm]
-9367.06	9367.06	1042624125.	1423880.6	2.35	5.10	0.0	321.1

Partial cross sections

Mat NoR	A[cm2] It[cm4]	Ay/Az/Ayz [cm2]	Iy/Iz/Iyz [cm4]	ys/zs [mm]	modules [N/mm2]	gam [kN/m]
1	1069.60	374.63	903669.7	0.0	210000	8.40
	7990.7	428.98	398580.9	400.0	80769	
30	3570.00	4030.92	146691.2	0.0	32837	8.93
	904750.1	193.18	3117310.1	-122.1	13682	
31	18375.00	41481168.	0.0	0.0	0	45.94
	5512501.0	37388.97901762872.		-150.0	0	
300	15.07	17.99	847.8	0.0	200000	0.00
	0.0	1.01	12560.0	-150.0	76923	

Design values of cross section

Mat NoR	A[cm2] It[cm4]	Ay/Az/Ayz [cm2]	Iy/Iz/Iyz [cm4]	ys/zs [mm]	modules [N/mm2]	gam [kN/m]
1	1511.92	915.42	1777982.7	0.0	182609	63.26
	6270.0	455.03	784247.7	247.0	70234	

Design forces and moments
(C/E = characteristic plastic/elastic, D=plast.Design, F=elast. Design)

	N[kN]	Vy[kN]	Vz[kN]	Mt[kNm]	My[kNm]	Mz[kNm]	y[mm]	z[mm]	BUCK
C	36585.2	50744.10	35388.07	99055.71	22135.36	59290.14	297.4	-132.	c c
C	-60238.3				34632.55	0.00	0.0	217.7	COMB
C	-32917.5				0.00	62637.10	0.0	0.0	COMB
C	-102420.	50744.10	35388.07	99055.72	-10272.8	-59290.1	-297.	378.2	
C	-5596.7				-10722.3	0.00	0.0	217.7	COMB
C	-32917.5				0.00	-62637.1	0.0	0.0	COMB
E	55012.9	5833.03	7727.07	523.56	7213.94	3022.57	0.0	217.7	
E	-31506.7	5833.03	7727.07	523.56	-12252.0	-3022.57	0.0	217.7	
D	31813.2	36778.50	25464.89	66149.80	18453.32	41510.95	197.9	-81.3	

SOFiSTiK AG - www.sofistik.de

Composite bridge 38+50+38, b=14.25m, 2x2HL1100R HISTAR460 , slab 0.30m C30/37

Design forces and moments
(C/E = characteristic plastic/elastic, D=plast.Design, F=elast. Design)

	N[kN]	Vy[kN]	Vz[kN]	Mt[kNm]	My[kNm]	Mz[kNm]	y[mm]	z[mm]	BUCK
D	-39023.3				25263.91	0.00	0.0	217.7	COMB
D	-21945.0				0.00	42829.79	0.0	0.0	COMB
D	-75703.2	36778.50	25464.89	66149.80	-8932.85	-41511.0	-198.	378.3	
D	-4866.7				-9323.74	0.00	0.0	217.7	COMB
D	-21945.0				0.00	-42829.8	0.0	0.0	COMB
F	47837.3	3888.69	6719.19	349.04	4809.30	2015.05	0.0	217.7	
F	-21004.4	3888.69	6719.19	349.04	-10653.9	-2015.05	0.0	217.7	

Additional Design Data

M	periphery-O/-I [m2/m]	[m2/m]	deff [mm]	t-min [mm]	t-max [mm]	SMP [o/o]	thet-p [tm2/m]	thet-y [tm2/m]	thet-z [tm2/m]	thet-yz [tm2/m]
	25.080		13.1	0.8	300.0	0.0	22.945	0.292	22.653	
1	4.550		47.0	45.0	52.0	0.0	0.102	0.071	0.031	
30	4.280		600.0	50.0	300.0	0.0	0.082	0.004	0.078	
31	12.250		300.0	300.0	300.0	0.0	22.544		22.544	
**	4.000		0.8	0.8	0.8	0.0	0.000	0.000	0.000	

Cross section No. 152.1 = CS 1 - steel alone

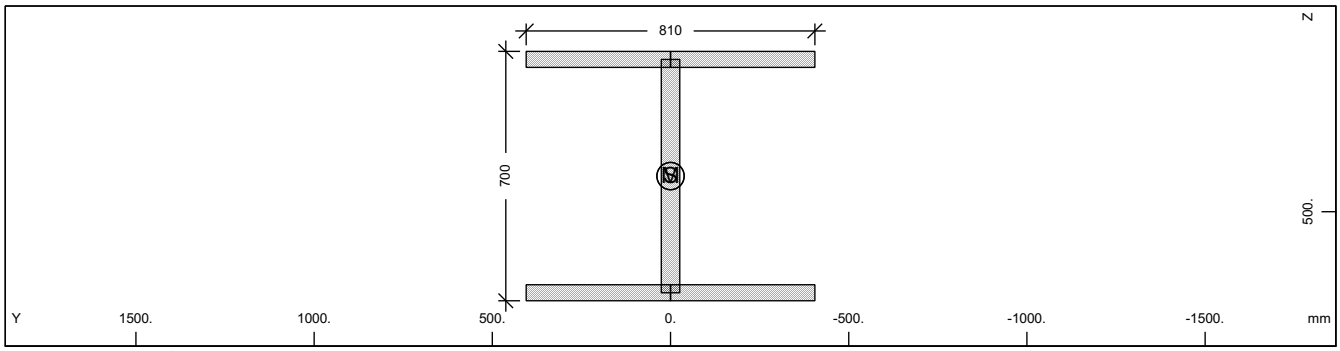

Cross section No. 152

Static properties of cross section

Mat NoR	A[cm2] It[cm4]	Ay/Az/Ayz [cm2]	Iy/Iz/Iyz [cm4]	ys/zs [mm]	modules [N/mm2]	gam [kN/m]
1	1069.60	607.50	903669.7	0.0	210000	8.40
	6270.0	288.17	398580.9	400.0	80769	

Additional static properties of cross section

Alfa-T [1/°K]	ymin ymax [mm]	zmin zmax [mm]	hymin hzmin [mm]	AK AB [cm2]	MB	Tau-T Tau-B [1/m3]	Tau-Vy Tau-Vz [1/m2]
1.2E-05	-405.0	-350.0		5.910E+02		6.508E+02	2.058E+01
	405.0	350.0				6.283E+01	3.134E+01

Section values for warping

Wmin[cm2]	Wmax[cm2]	CM[cm6]	CMS[cm4]	ASwyy[cm6]	ASwzz[cm6]	ry[mm]	rz[mm]
-1326.38	1326.38	427502762.	651581.6	-3.01	-6.82	0.0	0.0

Design values of cross section

Mat NoR	A[cm2] It[cm4]	Ay/Az/Ayz [cm2]	Iy/Iz/Iyz [cm4]	ys/zs [mm]	modules [N/mm2]	gam [kN/m]
1	1069.60	607.50	903669.7	0.0	182609	8.40
	6270.0	288.17	398580.9	400.0	70234	

Design forces and moments
(C/E = characteristic plastic/elastic, D=plast.Design, F=elast. Design)

	N[kN]	Vy[kN]	Vz[kN]	Mt[kNm]	My[kNm]	Mz[kNm]	y[mm]	z[mm]	BUCK
C	35831.6	14099.76	6587.62	488.52	9866.45	5093.69	0.0	400.0	c d
C	0.0				0.00	0.00	0.0	0.0	COMB
E	35831.6	9399.84	6171.79	297.21	8649.41	3296.90	0.0	400.0	
D	31157.9	12260.66	5728.37	424.80	8579.52	4429.29	0.0	400.0	

SOFiSTiK AG - www.sofistik.de

Composite bridge 38+50+38, b=14.25m, 2x2HL1100R HISTAR460 , slab 0.30m C30/37

Design forces and moments
(C/E = characteristic plastic/elastic, D=plast.Design, F=elast. Design)

	N[kN]	Vy[kN]	Vz[kN]	Mt[kNm]	My[kNm]	Mz[kNm]	y[mm]	z[mm]	BUCK
D	0.0				0.00	0.00	0.0	0.0	COMB
F	31157.9	8173.78	5366.77	258.44	7521.22	2866.87	0.0	400.0	

Additional Design Data

M	periphery-O/-I [m2/m]	[m2/m]	deff [mm]	t-min [mm]	t-max [mm]	SMP [o/o]	thet-p [tm2/m]	thet-y [tm2/m]	thet-z [tm2/m]	thet-yz [tm2/m]
	4.550		47.0	45.0	52.0	0.0	0.102	0.071	0.031	

Cross section No. 152.2 = CS 10 - prefab. slab C1

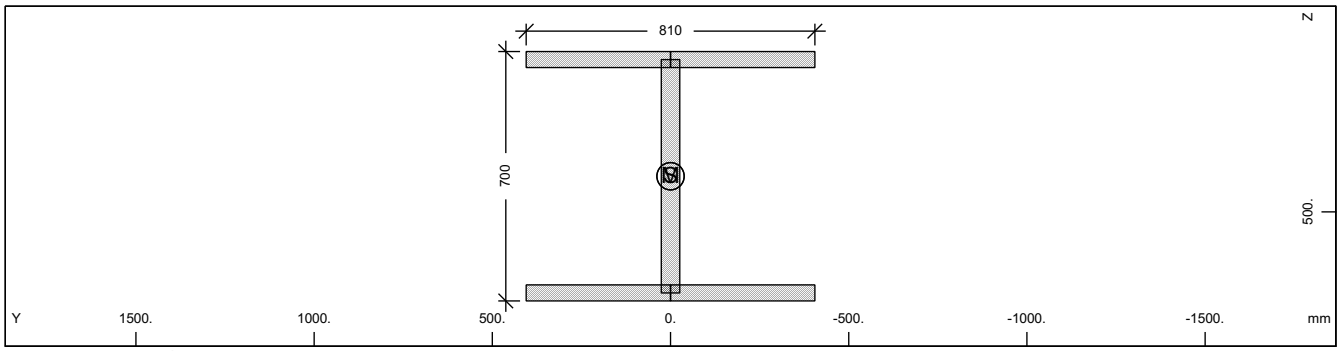

Cross section No. 152

Static properties of cross section

Mat NoR	A[cm2] It[cm4]	Ay/Az/Ayz [cm2]	Iy/Iz/Iyz [cm4]	ys/zs [mm]	modules [N/mm2]	gam [kN/m]
1	1069.60	607.50	903669.7	0.0	210000	8.40
	6270.0	288.17	398580.9	400.0	80769	

Additional static properties of cross section

Alfa-T [1/°K]	ymin ymax [mm]	zmin zmax [mm]	hymin hzmin [mm]	AK AB [cm2]	MB	Tau-T Tau-B [1/m3]	Tau-Vy Tau-Vz [1/m2]
1.2E-05	-405.0	-350.0		5.910E+02		6.508E+02	2.058E+01
	405.0	350.0				6.283E+01	3.134E+01

Section values for warping

Wmin[cm2]	Wmax[cm2]	CM[cm6]	CMS[cm4]	ASwyy[cm6]	ASwzz[cm6]	ry[mm]	rz[mm]
-1326.38	1326.38	427502762.	651581.6	-3.01	-6.82	0.0	0.0

Design values of cross section

Mat NoR	A[cm2] It[cm4]	Ay/Az/Ayz [cm2]	Iy/Iz/Iyz [cm4]	ys/zs [mm]	modules [N/mm2]	gam [kN/m]
1	1069.60	607.50	903669.7	0.0	182609	8.40
	6270.0	288.17	398580.9	400.0	70234	

Design forces and moments
(C/E = characteristic plastic/elastic, D=plast.Design, F=elast. Design)

	N[kN]	Vy[kN]	Vz[kN]	Mt[kNm]	My[kNm]	Mz[kNm]	y[mm]	z[mm]	BUCK
C	35831.6	14099.76	6587.62	488.52	9866.45	5093.69	0.0	400.0	c d
C	0.0				0.00	0.00	0.0	0.0	COMB
E	35831.6	9399.84	6171.79	297.21	8649.41	3296.90	0.0	400.0	
D	31157.9	12260.66	5728.37	424.80	8579.52	4429.29	0.0	400.0	
D	0.0				0.00	0.00	0.0	0.0	COMB
F	31157.9	8173.78	5366.77	258.44	7521.22	2866.87	0.0	400.0	

Additional Design Data

M	periphery-O/-I [m2/m]	[m2/m]	deff [mm]	t-min [mm]	t-max [mm]	SMP [o/o]	thet-p [tm2/m]	thet-y [tm2/m]	thet-z [tm2/m]	thet-yz [tm2/m]
	4.550		47.0	45.0	52.0	0.0	0.102	0.071	0.031	

SOFiSTiK AG - www.sofistik.de

Composite bridge 38+50+38, b=14.25m, 2x2HL1100R HISTAR460 , slab 0.30m C30/37

Cross section No. 152.3 = CS 20 - in-situ conc:C2

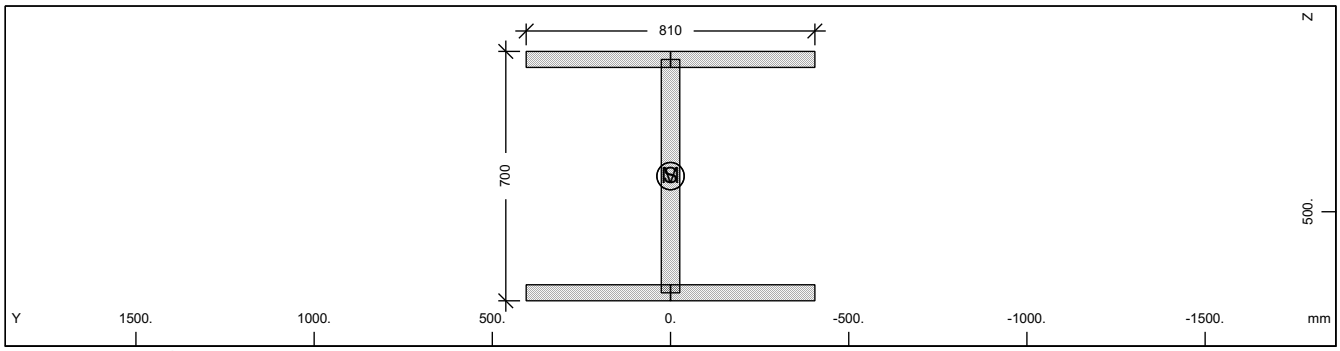

Cross section No. 152

Static properties of cross section

Mat NoR	A[cm2] It[cm4]	Ay/Az/Ayz [cm2]	Iy/Iz/Iyz [cm4]	ys/zs [mm]	modules [N/mm2]	gam [kN/m]
1	1069.60	607.50	903669.7	0.0	210000	8.40
	6270.0	288.17	398580.9	400.0	80769	

Additional static properties of cross section

Alfa-T [1/°K]	ymin ymax [mm]	zmin zmax [mm]	hymin hzmin [mm]	AK AB [cm2]	MB	Tau-T Tau-B [1/m3]	Tau-Vy Tau-Vz [1/m2]
1.2E-05	-405.0	-350.0		5.910E+02		6.508E+02	2.058E+01
	405.0	350.0				6.283E+01	3.134E+01

Section values for warping

Wmin[cm2]	Wmax[cm2]	CM[cm6]	CMS[cm4]	ASwyy[cm6]	ASwzz[cm6]	ry[mm]	rz[mm]
-1326.38	1326.38	427502762.	651581.6	-3.01	-6.82	0.0	0.0

Design values of cross section

Mat NoR	A[cm2] It[cm4]	Ay/Az/Ayz [cm2]	Iy/Iz/Iyz [cm4]	ys/zs [mm]	modules [N/mm2]	gam [kN/m]
1	1069.60	607.50	903669.7	0.0	182609	8.40
	6270.0	288.17	398580.9	400.0	70234	

Design forces and moments
(C/E = characteristic plastic/elastic, D=plast.Design, F=elast. Design)

	N[kN]	Vy[kN]	Vz[kN]	Mt[kNm]	My[kNm]	Mz[kNm]	y[mm]	z[mm]	BUCK
C	35831.6	14099.76	6587.62	488.52	9866.45	5093.69	0.0	400.0	c d
C	0.0				0.00	0.00	0.0	0.0	COMB
E	35831.6	9399.84	6171.79	297.21	8649.41	3296.90	0.0	400.0	
D	31157.9	12260.66	5728.37	424.80	8579.52	4429.29	0.0	400.0	
D	0.0				0.00	0.00	0.0	0.0	COMB
F	31157.9	8173.78	5366.77	258.44	7521.22	2866.87	0.0	400.0	

Additional Design Data

M	periphery-O/-I [m2/m] [m2/m]	deff [mm]	t-min [mm]	t-max [mm]	SMP [o/o]	thet-p [tm2/m]	thet-y [tm2/m]	thet-z [tm2/m]	thet-yz [tm2/m]
	4.550	47.0	45.0	52.0	0.0	0.102	0.071	0.031	

SOFiSTiK AG - www.sofistik.de

Composite bridge 38+50+38, b=14.25m, 2x2HL1100R HISTAR460 , slab 0.30m C30/37

Cross section No. 152.4 = CS 21 - reinf active:C2

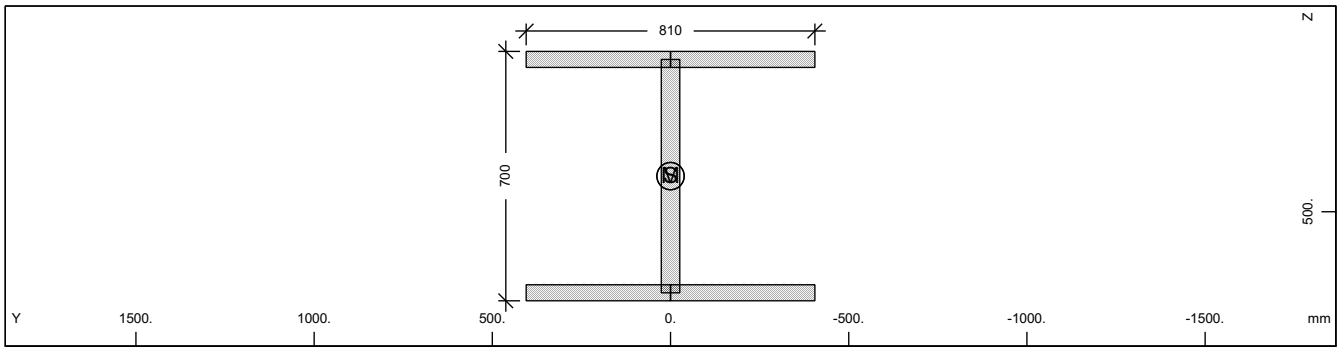

Cross section No. 152

Static properties of cross section

Mat NoR	A[cm2] It[cm4]	Ay/Az/Ayz [cm2]	Iy/Iz/Iyz [cm4]	ys/zs [mm]	modules [N/mm2]	gam [kN/m]
1	1069.60	607.50	903669.7	0.0	210000	8.40
	6270.0	288.17	398580.9	400.0	80769	

Additional static properties of cross section

Alfa-T [1/°K]	ymin ymax [mm]	zmin zmax [mm]	hymin hzmin [mm]	AK AB [cm2]	MB	Tau-T Tau-B [1/m3]	Tau-Vy Tau-Vz [1/m2]
1.2E-05	-405.0	-350.0		5.910E+02		6.508E+02	2.058E+01
	405.0	350.0				6.283E+01	3.134E+01

Section values for warping

Wmin[cm2]	Wmax[cm2]	CM[cm6]	CMS[cm4]	ASwyy[cm6]	ASwzz[cm6]	ry[mm]	rz[mm]
-1326.38	1326.38	427502762.	651581.6	-3.01	-6.82	0.0	0.0

Design values of cross section

Mat NoR	A[cm2] It[cm4]	Ay/Az/Ayz [cm2]	Iy/Iz/Iyz [cm4]	ys/zs [mm]	modules [N/mm2]	gam [kN/m]
1	1069.60	607.50	903669.7	0.0	182609	8.40
	6270.0	288.17	398580.9	400.0	70234	

Design forces and moments
(C/E = characteristic plastic/elastic, D=plast.Design, F=elast. Design)

	N[kN]	Vy[kN]	Vz[kN]	Mt[kNm]	My[kNm]	Mz[kNm]	y[mm]	z[mm]	BUCK
C	35831.6	14099.76	6587.62	488.52	9866.45	5093.69	0.0	400.0	c d
C	0.0				0.00	0.00	0.0	0.0	COMB
E	35831.6	9399.84	6171.79	297.21	8649.41	3296.90	0.0	400.0	
D	31157.9	12260.66	5728.37	424.80	8579.52	4429.29	0.0	400.0	
D	0.0				0.00	0.00	0.0	0.0	COMB
F	31157.9	8173.78	5366.77	258.44	7521.22	2866.87	0.0	400.0	

Additional Design Data

M	periphery-O/-I [m2/m] [m2/m]	deff [mm]	t-min [mm]	t-max [mm]	SMP [o/o]	thet-p [tm2/m]	thet-y [tm2/m]	thet-z [tm2/m]	thet-yz [tm2/m]
	4.550	47.0	45.0	52.0	0.0	0.102	0.071	0.031	

SOFiSTiK AG - www.sofistik.de

Composite bridge 38+50+38, b=14.25m, 2x2HL1100R HISTAR460 , slab 0.30m C30/37

Cross section No. 152.5 = CS 30 - in-situ conc:C3

Cross section No. 153 - VFT

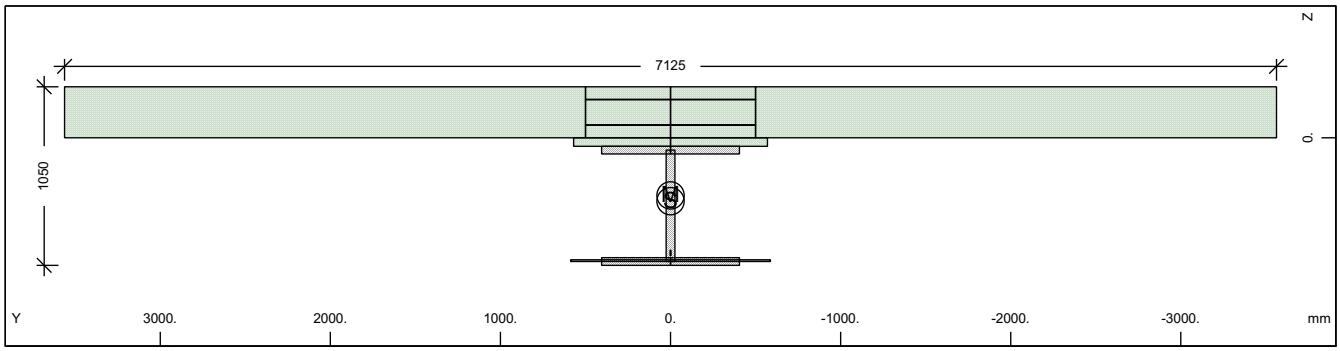

Cross section No. 153 - VFT

Static properties of cross section

Mat NoR	A[cm2] It[cm4]	Ay/Az/Ayz [cm2]	Iy/Iz/Iyz [cm4]	ys/zs [mm]	y/z-sc [mm]	modules [N/mm2]	gam [kN/m]
1	1135.99	645.43	1086280.2	0.0	0.0	210000	63.55
	6270.0	327.35	448426.4	372.9	338.9	80769	

Additional static properties of cross section

Alfa-T [1/°K]	ymin ymax [mm]	zmin zmax [mm]	hymin hzmin [mm]	AK AB [cm2]	MB	Tau-T Tau-B [1/m3]	Tau-Vy Tau-Vz [1/m2]
1.2E-05	-3562.5	-672.9		9.935E+01		1.715E+02	2.655E+01
	3562.5	377.1		2.206E+04		1.189E+02	2.907E+01

Section values for warping

Wmin[cm2]	Wmax[cm2]	CM[cm6]	CMS[cm4]	ASwyy[cm6]	ASwzz[cm6]	ry[mm]	rz[mm]
-17415.78	17415.78	564328746.	771743.0	0.60	1.46	0.0	40.8

Partial cross sections

Mat NoR	A[cm2] It[cm4]	Ay/Az/Ayz [cm2]	Iy/Iz/Iyz [cm4]	ys/zs [mm]	modules [N/mm2]	gam [kN/m]
1	1069.60	541.76	903669.7	0.0	210000	8.40
	7990.7	313.84	398580.9	400.0	80769	
25	117.40		9.8	0.0	10667	0.29
	539368.1	0.00	0.0	722.5	4444	
210	0.64	0.00	0.0	0.0	200000	0.00
	2.2	0.00	0.0	677.5	76923	
31	21945.00	81034377.	170028.4	0.0	0	54.86
	6417251.4	191356.89904880243.		-145.5	0	
300	62.80	108.42	3532.5	0.0	200000	0.00
	2.1	14.01	52333.3	-150.0	76923	

Design values of cross section

Mat NoR	A[cm2] It[cm4]	Ay/Az/Ayz [cm2]	Iy/Iz/Iyz [cm4]	ys/zs [mm]	modules [N/mm2]	gam [kN/m]
1	1134.59	645.34	1084577.3	0.0	182609	63.55
	6270.0	327.18	448425.4	372.5	70234	

Design forces and moments
(C/E = characteristic plastic/elastic, D=plast.Design, F=elast. Design)

	N[kN]	Vy[kN]	Vz[kN]	Mt[kNm]	My[kNm]	Mz[kNm]	y[mm]	z[mm]	BUCK
C	39003.8	52140.45	36043.66	99179.80	22340.65	60206.52	279.8	-131.	c c
C	-68069.4				45787.38	0.00	0.0	372.9	COMB
C	-33093.6				0.00	63285.64	0.0	0.0	COMB
C	262309.1	52140.45	36043.66	99179.79	-11470.1	-60108.0	-280.	319.4	
C	1882.2				-11539.4	0.00	0.0	372.9	COMB
C	-33093.6				0.00	-63285.6	0.0	0.0	COMB
E	38055.5	10575.36	6652.62	96.23	9538.58	3709.21	0.0	372.9	

SOFiSTiK AG - www.sofistik.de

Composite bridge 38+50+38, b=14.25m, 2x2HL1100R HISTAR460 , slab 0.30m C30/37

Design forces and moments
(C/E = characteristic plastic/elastic, D=plast.Design, F=elast. Design)

	N[kN]	Vy[kN]	Vz[kN]	Mt[kNm]	My[kNm]	Mz[kNm]	y[mm]	z[mm]	BUCK
E	-38055.5	10575.36	6652.62	96.23	-9538.58	-3709.21	0.0	372.9	
D	33916.3	37992.72	25995.66	66234.62	18630.17	42170.82	186.1	-81.2	
D	-45818.5				32864.53	0.00	0.0	372.9	COMB
D	-22062.4				0.00	43383.25	0.0	0.0	COMB
D	166958.9	37992.72	25995.66	66234.62	-9972.46	-42127.1	-186.	317.5	
D	1693.7				-10032.5	0.00	0.0	372.9	COMB
D	-22062.4				0.00	-43383.3	0.0	0.0	COMB
F	33091.7	9195.97	5784.89	64.15	8294.41	3225.40	0.0	372.9	
F	-33091.7	9195.97	5784.89	64.15	-8294.41	-3225.40	0.0	372.9	

Additional Design Data

M	periphery-O/-I [m2/m]	[m2/m]	deff [mm]	t-min [mm]	t-max [mm]	SMP [o/o]	thet-p [tm2/m]	thet-y [tm2/m]	thet-z [tm2/m]	thet-yz [tm2/m]
	25.104		9.1	3.1	300.0	0.0	22.964	0.310	22.653	
1	4.550		47.0	45.0	52.0	0.0	0.102	0.071	0.031	
25	0.020		1174.0			0.0	0.000	0.000		
**	0.004		32.0			0.0	0.000		0.000	
31	16.530		265.5	50.0	300.0	0.0	22.626	0.004	22.622	
**	4.000		3.1	3.1	3.1	0.0	0.000	0.000	0.000	

Cross section No. 153.1 = CS 1 - steel alone

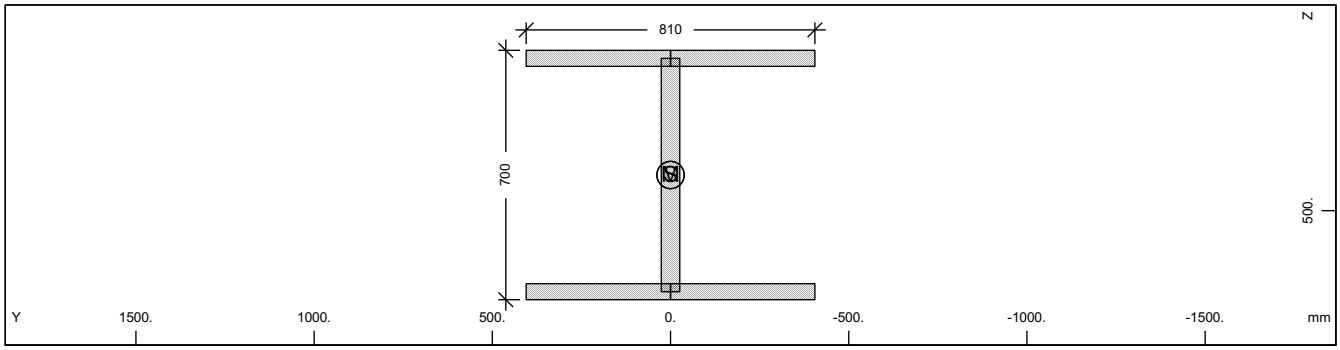

Cross section No. 153

Static properties of cross section

Mat NoR	A[cm2] It[cm4]	Ay/Az/Ayz [cm2]	Iy/Iz/Iyz [cm4]	ys/zs [mm]	modules [N/mm2]	gam [kN/m]
1	1069.60	607.50	903669.7	0.0	210000	8.40
	6270.0	288.17	398580.9	400.0	80769	

Additional static properties of cross section

Alfa-T [1/°K]	ymin ymax [mm]	zmin zmax [mm]	hymin hzmin [mm]	AK AB [cm2]	MB	Tau-T Tau-B [1/m3]	Tau-Vy Tau-Vz [1/m2]
1.2E-05	-405.0	-350.0		5.910E+02		6.508E+02	2.058E+01
	405.0	350.0				1.189E+02	3.134E+01

Section values for warping

Wmin[cm2]	Wmax[cm2]	CM[cm6]	CMS[cm4]	ASwyy[cm6]	ASwzz[cm6]	ry[mm]	rz[mm]
-1326.38	1326.38	427502762.	651581.6	-3.01	-6.82	0.0	0.0

Design values of cross section

Mat NoR	A[cm2] It[cm4]	Ay/Az/Ayz [cm2]	Iy/Iz/Iyz [cm4]	ys/zs [mm]	modules [N/mm2]	gam [kN/m]
1	1069.60	607.50	903669.7	0.0	182609	8.40
	6270.0	288.17	398580.9	400.0	70234	

SOFiSTiK AG - www.sofistik.de

Composite bridge 38+50+38, b=14.25m, 2x2HL1100R HISTAR460 , slab 0.30m C30/37

Design forces and moments
(C/E = characteristic plastic/elastic, D=plast.Design, F=elast. Design)

	N[kN]	Vy[kN]	Vz[kN]	Mt[kNm]	My[kNm]	Mz[kNm]	y[mm]	z[mm]	BUCK
C	35831.6	14099.76	6587.62	488.52	9866.45	5093.69	0.0	400.0	c d
C	0.0				0.00	0.00	0.0	0.0	COMB
E	35831.6	9399.84	6171.79	297.21	8649.41	3296.90	0.0	400.0	
D	31157.9	12260.66	5728.37	424.80	8579.52	4429.29	0.0	400.0	
D	0.0				0.00	0.00	0.0	0.0	COMB
F	31157.9	8173.78	5366.77	258.44	7521.22	2866.87	0.0	400.0	

Additional Design Data

M	periphery-O/-I [m2/m]	[m2/m]	deff [mm]	t-min [mm]	t-max [mm]	SMP [o/o]	thet-p [tm2/m]	thet-y [tm2/m]	thet-z [tm2/m]	thet-yz [tm2/m]
	4.550		47.0	45.0	52.0	0.0	0.102	0.071	0.031	

Cross section No. 153.2 = CS 10 - prefab. slab C1

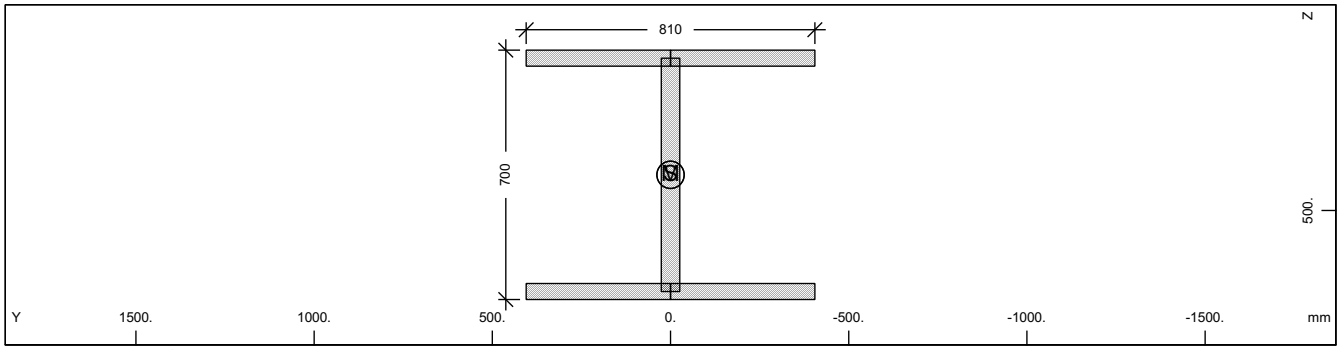

Cross section No. 153

Static properties of cross section

Mat NoR	A[cm2] It[cm4]	Ay/Az/Ayz [cm2]	Iy/Iz/Iyz [cm4]	ys/zs [mm]	modules [N/mm2]	gam [kN/m]
1	1069.60	607.50	903669.7	0.0	210000	8.40
	6270.0	288.17	398580.9	400.0	80769	

Additional static properties of cross section

Alfa-T [1/°K]	ymin ymax [mm]	zmin zmax [mm]	hymin hzmin [mm]	AK AB [cm2]	MB	Tau-T Tau-B [1/m3]	Tau-Vy Tau-Vz [1/m2]
1.2E-05	-405.0	-350.0		5.910E+02		6.508E+02	2.058E+01
	405.0	350.0				1.189E+02	3.134E+01

Section values for warping

Wmin[cm2]	Wmax[cm2]	CM[cm6]	CMS[cm4]	ASwyy[cm6]	ASwzz[cm6]	ry[mm]	rz[mm]
-1326.38	1326.38	427502762.	651581.6	-3.01	-6.82	0.0	0.0

Design values of cross section

Mat NoR	A[cm2] It[cm4]	Ay/Az/Ayz [cm2]	Iy/Iz/Iyz [cm4]	ys/zs [mm]	modules [N/mm2]	gam [kN/m]
1	1069.60	607.50	903669.7	0.0	182609	8.40
	6270.0	288.17	398580.9	400.0	70234	

Design forces and moments
(C/E = characteristic plastic/elastic, D=plast.Design, F=elast. Design)

	N[kN]	Vy[kN]	Vz[kN]	Mt[kNm]	My[kNm]	Mz[kNm]	y[mm]	z[mm]	BUCK
C	35831.6	14099.76	6587.62	488.52	9866.45	5093.69	0.0	400.0	c d
C	0.0				0.00	0.00	0.0	0.0	COMB
E	35831.6	9399.84	6171.79	297.21	8649.41	3296.90	0.0	400.0	
D	31157.9	12260.66	5728.37	424.80	8579.52	4429.29	0.0	400.0	
D	0.0				0.00	0.00	0.0	0.0	COMB
F	31157.9	8173.78	5366.77	258.44	7521.22	2866.87	0.0	400.0	

SOFiSTiK AG - www.sofistik.de

Composite bridge 38+50+38, b=14.25m, 2x2HL1100R HISTAR460 , slab 0.30m C30/37

Additional Design Data

M	periphery-O/-I [m2/m]	[m2/m]	deff [mm]	t-min [mm]	t-max [mm]	SMP [o/o]	thet-p [tm2/m]	thet-y [tm2/m]	thet-z [tm2/m]	thet-yz [tm2/m]
	4.550		47.0	45.0	52.0	0.0	0.102	0.071	0.031	

Cross section No. 153.3 = CS 20 - in-situ conc:C2

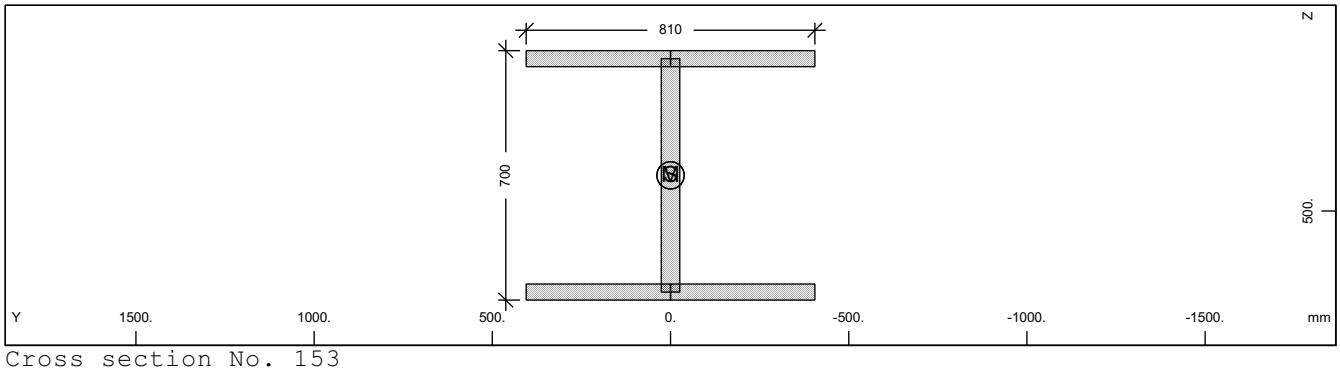

Cross section No. 153

Static properties of cross section

Mat NoR	A[cm2] It[cm4]	Ay/Az/Ayz [cm2]	Iy/Iz/Iyz [cm4]	ys/zs [mm]	modules [N/mm2]	gam [kN/m]
1	1069.60	607.50	903669.7	0.0	210000	8.40
	6270.0	288.17	398580.9	400.0	80769	

Additional static properties of cross section

Alfa-T [1/°K]	ymin ymax [mm]	zmin zmax [mm]	hymin hzmin [mm]	AK AB [cm2]	MB	Tau-T Tau-B [1/m3]	Tau-Vy Tau-Vz [1/m2]
1.2E-05	-405.0	-350.0		5.910E+02		6.508E+02	2.058E+01
	405.0	350.0				1.189E+02	3.134E+01

Section values for warping

Wmin[cm2]	Wmax[cm2]	CM[cm6]	CMS[cm4]	ASwyy[cm6]	ASwzz[cm6]	ry[mm]	rz[mm]
-1326.38	1326.38	427502762.	651581.6	-3.01	-6.82	0.0	0.0

Design values of cross section

Mat NoR	A[cm2] It[cm4]	Ay/Az/Ayz [cm2]	Iy/Iz/Iyz [cm4]	ys/zs [mm]	modules [N/mm2]	gam [kN/m]
1	1069.60	607.50	903669.7	0.0	182609	8.40
	6270.0	288.17	398580.9	400.0	70234	

Design forces and moments
(C/E = characteristic plastic/elastic, D=plast.Design, F=elast. Design)

	N[kN]	Vy[kN]	Vz[kN]	Mt[kNm]	My[kNm]	Mz[kNm]	y[mm]	z[mm]	BUCK
C	35831.6	14099.76	6587.62	488.52	9866.45	5093.69	0.0	400.0	c d
C	0.0				0.00	0.00	0.0	0.0	COMB
E	35831.6	9399.84	6171.79	297.21	8649.41	3296.90	0.0	400.0	
D	31157.9	12260.66	5728.37	424.80	8579.52	4429.29	0.0	400.0	
D	0.0				0.00	0.00	0.0	0.0	COMB
F	31157.9	8173.78	5366.77	258.44	7521.22	2866.87	0.0	400.0	

Additional Design Data

M	periphery-O/-I [m2/m]	[m2/m]	deff [mm]	t-min [mm]	t-max [mm]	SMP [o/o]	thet-p [tm2/m]	thet-y [tm2/m]	thet-z [tm2/m]	thet-yz [tm2/m]
	4.550		47.0	45.0	52.0	0.0	0.102	0.071	0.031	

SOFiSTiK AG - www.sofistik.de

Composite bridge 38+50+38, b=14.25m, 2x2HL1100R HISTAR460 , slab 0.30m C30/37

Cross section No. 153.4 = CS 21 - reinf active:C2

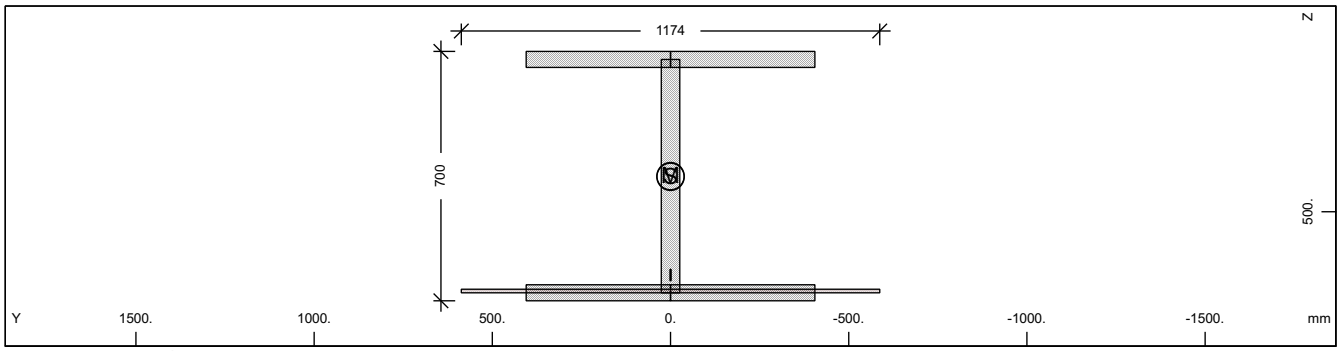

Cross section No. 153

Static properties of cross section

Mat NoR	A[cm2] It[cm4]	Ay/Az/Ayz [cm2]	Iy/Iz/Iyz [cm4]	ys/zs [mm]	modules [N/mm2]	gam [kN/m]
1	1076.18	607.50	910303.2	0.0	210000	8.69
	6270.0	288.72	398580.9	401.9	80769	

Additional static properties of cross section

Alfa-T [1/°K]	ymin ymax [mm]	zmin zmax [mm]	hymin hzmin [mm]	AK AB [cm2]	MB	Tau-T Tau-B [1/m3]	Tau-Vy Tau-Vz [1/m2]
1.2E-05	-587.0	-351.9		9.934E+01		1.715E+02	2.058E+01
	587.0	348.1		1.174E+02		1.189E+02	3.133E+01

Section values for warping

Wmin[cm2]	Wmax[cm2]	CM[cm6]	CMS[cm4]	ASwyy[cm6]	ASwzz[cm6]	ry[mm]	rz[mm]
-1326.38	1326.38	427502820.	651581.7	-1.15	-2.63	0.0	-0.5

Partial cross sections

Mat NoR	A[cm2] It[cm4]	Ay/Az/Ayz [cm2]	Iy/Iz/Iyz [cm4]	ys/zs [mm]	modules [N/mm2]	gam [kN/m]
1	1069.60	607.50	903669.7	0.0	210000	8.40
	7990.7	288.72	398580.9	400.0	80769	
25	117.40		9.8	0.0	10667	0.29
	539368.1	0.00	0.0	722.5	4444	
210	0.64	0.00	0.0	0.0	200000	0.00
	2.2	0.00	0.0	677.5	76923	

Design values of cross section

Mat NoR	A[cm2] It[cm4]	Ay/Az/Ayz [cm2]	Iy/Iz/Iyz [cm4]	ys/zs [mm]	modules [N/mm2]	gam [kN/m]
1	1074.78	607.50	908871.5	0.0	182609	8.69
	6270.0	288.72	398580.9	401.5	70234	

Design forces and moments
(C/E = characteristic plastic/elastic, D=plast.Design, F=elast. Design)

	N[kN]	Vy[kN]	Vz[kN]	Mt[kNm]	My[kNm]	Mz[kNm]	y[mm]	z[mm]	BUCK
C	35863.8	14118.33	7243.22	609.92	9999.89	5145.57	0.3	398.7	c c
C	-115.5				9998.92	0.00	0.0	401.9	COMB
C	-176.1				0.00	5145.63	0.0	0.0	COMB
C	-36216.0	14118.33	7243.22	609.92	-9887.60	-5145.48	-0.3	408.7	
C	-236.7				-9886.02	0.00	0.0	401.9	COMB
C	-176.1				0.00	-5145.63	0.0	0.0	COMB
E	36051.9	9399.84	6173.45	96.22	8664.75	3296.90	0.0	401.9	
E	-36051.9	9399.84	6173.45	96.22	-8664.75	-3296.90	0.0	401.9	
D	31185.9	12276.81	6259.15	507.29	8670.18	4463.89	0.2	399.2	
D	-84.3				8669.65	0.00	0.0	401.9	COMB
D	-117.4				0.00	4463.97	0.0	0.0	COMB
D	-31420.7	12276.81	6259.15	507.29	-8595.17	-4463.85	-0.2	406.9	
D	-150.5				-8594.38	0.00	0.0	401.9	COMB
D	-117.4				0.00	-4463.97	0.0	0.0	COMB

SOFiSTiK AG - www.sofistik.de

Composite bridge 38+50+38, b=14.25m, 2x2HL1100R HISTAR460 , slab 0.30m C30/37

Design forces and moments
(C/E = characteristic plastic/elastic, D=plast.Design, F=elast. Design)

	N[kN]	Vy[kN]	Vz[kN]	Mt[kNm]	My[kNm]	Mz[kNm]	y[mm]	z[mm]	BUCK
F	31349.5	8173.78	5368.22	64.15	7534.57	2866.87	0.0	401.9	
F	-31349.5	8173.78	5368.22	64.15	-7534.57	-2866.87	0.0	401.9	

Additional Design Data

M	periphery-O/-I [m2/m]	[m2/m]	deff [mm]	t-min [mm]	t-max [mm]	SMP [o/o]	thet-p [tm2/m]	thet-y [tm2/m]	thet-z [tm2/m]	thet-yz [tm2/m]
	4.574		47.1	32.0	52.0	0.0	0.105	0.074	0.031	
1	4.550		47.0	45.0	52.0	0.0	0.102	0.071	0.031	
25	0.020		1174.0			0.0	0.000	0.000		
**	0.004		32.0			0.0	0.000		0.000	

Cross section No. 153.5 = CS 30 - in-situ conc:C3

Cross section No. 154 - VFT (151)

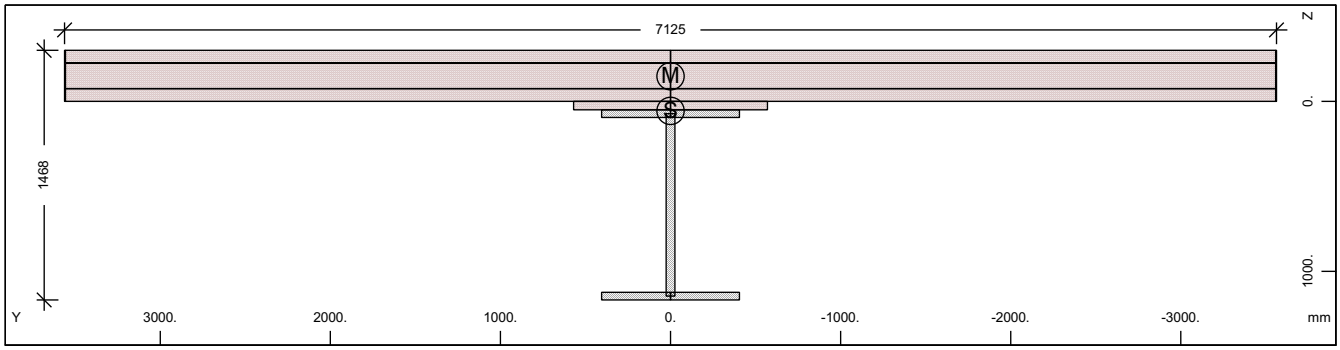

Cross section No. 154 - VFT (151)

Static properties of cross section

Mat NoR	A[cm2] It[cm4]	Ay/Az/Ayz [cm2]	Iy/Iz/Iyz [cm4]	ys/zs [mm]	y/z-sc [mm]	modules [N/mm2]	gam [kN/m]
1	4815.82	3118.65	8035554.0	0.0	0.0	210000	64.97
	6270.0	471.68	145603753.	56.1	-147.8	80769	

Additional static properties of cross section

Alfa-T [1/°K]	ymin ymax [mm]	zmin zmax [mm]	hymin hzmin [mm]	AK AB [cm2]	MB	Tau-T Tau-B [1/m3]	Tau-Vy Tau-Vz [1/m2]
1.2E-05	-3562.5	-356.1		1.437E+04		4.747E+00	4.139E+00
	3562.5	1111.9		2.195E+04		1.255E+02	1.689E+01

Section values for warping

Wmin[cm2]	Wmax[cm2]	CM[cm6]	CMS[cm4]	ASwyy[cm6]	ASwzz[cm6]	ry[mm]	rz[mm]
-5237.89	5237.89	3708299497.	924103.7	5858.15	323.30	0.0	-2510.0

Partial cross sections

Mat NoR	A[cm2] It[cm4]	Ay/Az/Ayz [cm2]	Iy/Iz/Iyz [cm4]	ys/zs [mm]	modules [N/mm2]	gam [kN/m]
1	1286.96	0.12	2633627.3	0.0	210000	10.10
	9949.8	271.17	398580.9	609.0	80769	
30	21915.00	17819.13	170022.2	0.0	32837	54.79
	6408250.4	1141.50	901077848.	-145.4	13682	
31	30.00	0.00	0.0	0.0	0	0.08
	9000.6	0.00	3802349.1	-150.0	0	
300	107.24	105.06	6032.1	0.0	200000	0.00
	0.2	7.51	4523914.0	-150.0	76923	

SOFiSTiK AG - www.sofistik.de

Composite bridge 38+50+38, b=14.25m, 2x2HL1100R HISTAR460 , slab 0.30m C30/37

Design values of cross section

Mat NoR	A[cm2] It[cm4]	Ay/Az/Ayz [cm2]	Iy/Iz/Iyz [cm4]	ys/zs [mm]	modules [N/mm2]	gam [kN/m]
1	4016.25	2414.34	7640002.0	0.0	182609	64.97
	6270.0	426.56112727857.		96.2	70234	

Design forces and moments
(C/E = characteristic plastic/elastic, D=plast.Design, F=elast. Design)

	N[kN]	Vy[kN]	Vz[kN]	Mt[kNm]	My[kNm]	Mz[kNm]	y[mm]	z[mm]	BUCK
C	48475.0	53404.68	39592.08	99166.02	35244.07	70438.37	196.7	-98.3	c d
C	-31378.3				38220.88	0.00	0.0	56.1	COMB
C	-32917.5				0.00	72080.77	0.0	0.0	COMB
C	-114310.	53404.68	39592.08	99166.00	-21773.2	-70438.4	-197.	454.6	
C	-34456.7				-24953.5	0.00	0.0	56.1	COMB
C	-32917.5				0.00	-72080.8	0.0	0.0	COMB
E	161330.0	24280.53	11453.52	3556.84	24209.37	78525.45	0.0	56.1	
E	-92396.0	24280.53	11453.52	3556.84	-24209.4	-78525.5	0.0	56.1	
D	42152.2	39092.05	29120.55	66245.72	29597.63	50563.77	93.7	-69.6	
D	-13927.7				30543.60	0.00	0.0	56.1	COMB
D	-21945.0				0.00	51041.69	0.0	0.0	COMB
D	-86042.2	39092.05	29120.55	66245.73	-18933.3	-50563.8	-93.7	453.8	
D	-29962.3				-21698.7	0.00	0.0	56.1	COMB
D	-21945.0				0.00	-51041.7	0.0	0.0	COMB
F	140287.0	16187.02	7710.96	2371.23	21051.62	52350.30	0.0	56.1	
F	-61597.3	16187.02	7710.96	2371.23	-21051.6	-52350.3	0.0	56.1	

Additional Design Data

M	periphery-O/-I [m2/m]	[m2/m]	deff [mm]	t-min [mm]	t-max [mm]	SMP [o/o]	thet-p [tm2/m]	thet-y [tm2/m]	thet-z [tm2/m]	thet-yz [tm2/m]
	50.376		19.1	0.8	300.0	0.0	23.350	0.697	22.653	
1	5.386		47.8	45.0	52.0	0.0	0.238	0.207	0.031	
30	16.510		600.0	50.0	300.0	0.0	22.531	0.004	22.527	
31	0.020		300.0	300.0	300.0	0.0	0.095		0.095	
**	28.460		0.8	0.8	0.8	0.0	0.000	0.000	0.000	

Cross section No. 154.1 = CS 1 - steel alone

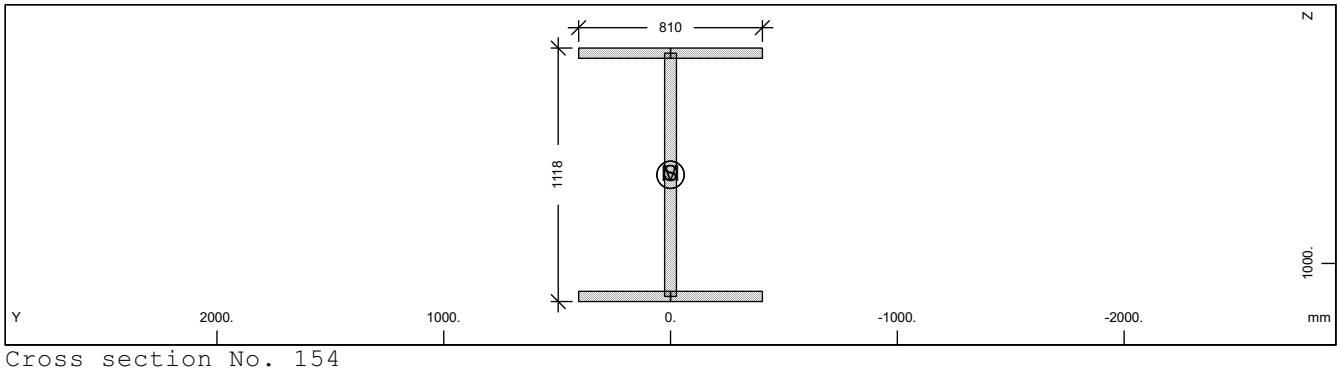

Cross section No. 154

Static properties of cross section

Mat NoR	A[cm2] It[cm4]	Ay/Az/Ayz [cm2]	Iy/Iz/Iyz [cm4]	ys/zs [mm]	modules [N/mm2]	gam [kN/m]
1	1286.96	607.50	2633627.3	0.0	210000	10.10
	6270.0	506.98	398580.9	609.0	80769	

Additional static properties of cross section

Alfa-T [1/°K]	ymin ymax [mm]	zmin zmax [mm]	hymin hzmin [mm]	AK AB [cm2]	MB	Tau-T Tau-B [1/m3]	Tau-Vy Tau-Vz [1/m2]
1.2E-05	-405.0	-559.0		7.359E+02		5.226E+02	2.058E+01
	405.0	559.0				1.255E+02	1.974E+01

SOFiSTiK AG - www.sofistik.de

Composite bridge 38+50+38, b=14.25m, 2x2HL1100R HISTAR460 , slab 0.30m C30/37

Section values for warping

Wmin[cm2]	Wmax[cm2]	CM[cm6]	CMS[cm4]	ASwyy[cm6]	ASwzz[cm6]	ry[mm]	rz[mm]
-2172.83	2172.831147244363.	1748581.4		-0.16	-1.04	0.0	0.0

Design values of cross section

Mat NoR	A[cm2] It[cm4]	Ay/Az/Ayz [cm2]	Iy/Iz/Iyz [cm4]	ys/zs [mm]	modules [N/mm2]	gam [kN/m]
1	1286.96	607.50	2633627.3	0.0	182609	10.10
	6270.0	506.98	398580.9	609.0	70234	

Design forces and moments
(C/E = characteristic plastic/elastic, D=plast.Design, F=elast. Design)

	N[kN]	Vy[kN]	Vz[kN]	Mt[kNm]	My[kNm]	Mz[kNm]	y[mm]	z[mm]	BUCK
C	43113.2	14099.76	10791.64	597.83	18116.18	5188.35	0.0	609.0	c d
C	0.0				0.00	0.00	0.0	0.0	COMB
E	43113.2	9399.84	9796.03	370.08	15782.92	3296.90	0.0	609.0	
D	37489.7	12260.66	9384.03	519.85	15753.20	4511.61	0.0	609.0	
D	0.0				0.00	0.00	0.0	0.0	COMB
F	37489.7	8173.78	8518.29	321.81	13724.27	2866.87	0.0	609.0	

Additional Design Data

M	periphery-O/-I [m2/m]	[m2/m]	deff [mm]	t-min [mm]	t-max [mm]	SMP [o/o]	thet-p [tm2/m]	thet-y [tm2/m]	thet-z [tm2/m]	thet-yz [tm2/m]
	5.386		47.8	45.0	52.0	0.0	0.238	0.207	0.031	

Cross section No. 154.2 = CS 10 - prefab. slab C1

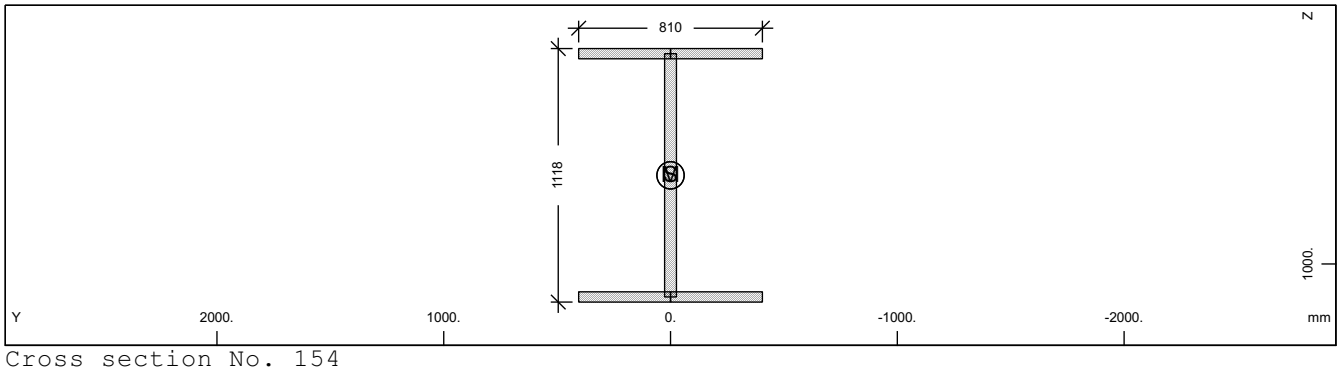

Cross section No. 154

Static properties of cross section

Mat NoR	A[cm2] It[cm4]	Ay/Az/Ayz [cm2]	Iy/Iz/Iyz [cm4]	ys/zs [mm]	modules [N/mm2]	gam [kN/m]
1	1286.96	607.50	2633627.3	0.0	210000	10.10
	6270.0	506.98	398580.9	609.0	80769	

Additional static properties of cross section

Alfa-T [1/°K]	ymin ymax [mm]	zmin zmax [mm]	hymin hzmin [mm]	AK AB [cm2]	MB	Tau-T Tau-B [1/m3]	Tau-Vy Tau-Vz [1/m2]
1.2E-05	-405.0	-559.0		7.359E+02		5.226E+02	2.058E+01
	405.0	559.0				1.255E+02	1.974E+01

Section values for warping

Wmin[cm2]	Wmax[cm2]	CM[cm6]	CMS[cm4]	ASwyy[cm6]	ASwzz[cm6]	ry[mm]	rz[mm]
-2172.83	2172.831147244363.	1748581.4		-0.16	-1.04	0.0	0.0

Design values of cross section

Mat NoR	A[cm2] It[cm4]	Ay/Az/Ayz [cm2]	Iy/Iz/Iyz [cm4]	ys/zs [mm]	modules [N/mm2]	gam [kN/m]
1	1286.96	607.50	2633627.3	0.0	182609	10.10
	6270.0	506.98	398580.9	609.0	70234	

SOFiSTiK AG - www.sofistik.de

Composite bridge 38+50+38, b=14.25m, 2x2HL1100R HISTAR460 , slab 0.30m C30/37

Design forces and moments
(C/E = characteristic plastic/elastic, D=plast.Design, F=elast. Design)

	N[kN]	Vy[kN]	Vz[kN]	Mt[kNm]	My[kNm]	Mz[kNm]	y[mm]	z[mm]	BUCK
C	43113.2	14099.76	10791.64	597.83	18116.18	5188.35	0.0	609.0	c d
C	0.0				0.00	0.00	0.0	0.0	COMB
E	43113.2	9399.84	9796.03	370.08	15782.92	3296.90	0.0	609.0	
D	37489.7	12260.66	9384.03	519.85	15753.20	4511.61	0.0	609.0	
D	0.0				0.00	0.00	0.0	0.0	COMB
F	37489.7	8173.78	8518.29	321.81	13724.27	2866.87	0.0	609.0	

Additional Design Data

M	periphery-O/-I [m2/m]	[m2/m]	deff [mm]	t-min [mm]	t-max [mm]	SMP [o/o]	thet-p [tm2/m]	thet-y [tm2/m]	thet-z [tm2/m]	thet-yz [tm2/m]
	5.386		47.8	45.0	52.0	0.0	0.238	0.207	0.031	

Cross section No. 154.3 = CS 20 - in-situ conc:C2

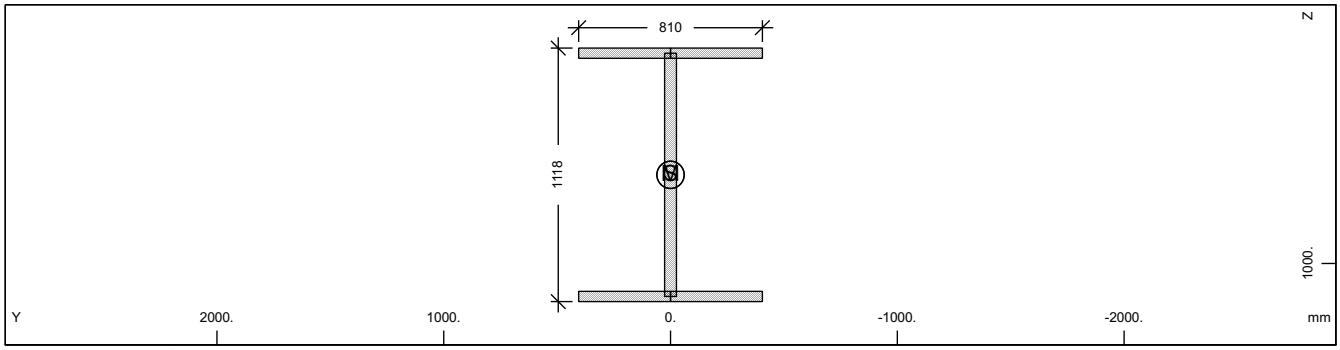

Cross section No. 154

Static properties of cross section

Mat NoR	A[cm2] It[cm4]	Ay/Az/Ayz [cm2]	Iy/Iz/Iyz [cm4]	ys/zs [mm]	modules [N/mm2]	gam [kN/m]
1	1286.96	607.50	2633627.3	0.0	210000	10.10
	6270.0	506.98	398580.9	609.0	80769	

Additional static properties of cross section

Alfa-T [1/°K]	ymin ymax [mm]	zmin zmax [mm]	hymin hzmin [mm]	AK AB [cm2]	MB	Tau-T Tau-B [1/m3]	Tau-Vy Tau-Vz [1/m2]
1.2E-05	-405.0	-559.0		7.359E+02		5.226E+02	2.058E+01
	405.0	559.0				1.255E+02	1.974E+01

Section values for warping

Wmin[cm2]	Wmax[cm2]	CM[cm6]	CMS[cm4]	ASwyy[cm6]	ASwzz[cm6]	ry[mm]	rz[mm]
-2172.83	2172.831147244363.		1748581.4	-0.16	-1.04	0.0	0.0

Design values of cross section

Mat NoR	A[cm2] It[cm4]	Ay/Az/Ayz [cm2]	Iy/Iz/Iyz [cm4]	ys/zs [mm]	modules [N/mm2]	gam [kN/m]
1	1286.96	607.50	2633627.3	0.0	182609	10.10
	6270.0	506.98	398580.9	609.0	70234	

Design forces and moments
(C/E = characteristic plastic/elastic, D=plast.Design, F=elast. Design)

	N[kN]	Vy[kN]	Vz[kN]	Mt[kNm]	My[kNm]	Mz[kNm]	y[mm]	z[mm]	BUCK
C	43113.2	14099.76	10791.64	597.83	18116.18	5188.35	0.0	609.0	c d
C	0.0				0.00	0.00	0.0	0.0	COMB
E	43113.2	9399.84	9796.03	370.08	15782.92	3296.90	0.0	609.0	
D	37489.7	12260.66	9384.03	519.85	15753.20	4511.61	0.0	609.0	
D	0.0				0.00	0.00	0.0	0.0	COMB
F	37489.7	8173.78	8518.29	321.81	13724.27	2866.87	0.0	609.0	

SOFiSTiK AG - www.sofistik.de

Composite bridge 38+50+38, b=14.25m, 2x2HL1100R HISTAR460 , slab 0.30m C30/37

Additional Design Data

M	periphery-O/-I [m2/m]	[m2/m]	deff [mm]	t-min [mm]	t-max [mm]	SMP [o/o]	thet-p [tm2/m]	thet-y [tm2/m]	thet-z [tm2/m]	thet-yz [tm2/m]
	5.386		47.8	45.0	52.0	0.0	0.238	0.207	0.031	

Cross section No. 154.4 = CS 21 - reinf active:C2

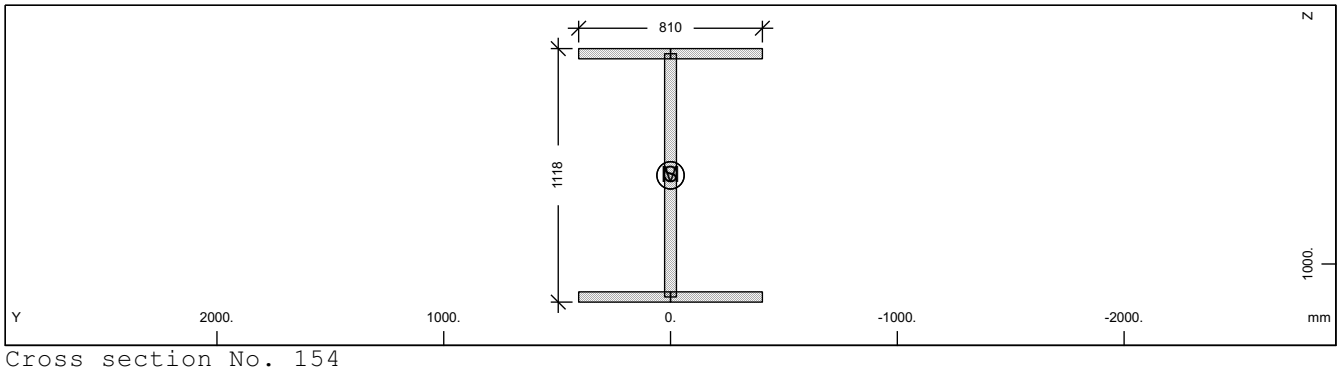

Cross section No. 154

Static properties of cross section

Mat NoR	A[cm2] It[cm4]	Ay/Az/Ayz [cm2]	Iy/Iz/Iyz [cm4]	ys/zs [mm]	modules [N/mm2]	gam [kN/m]
1	1286.96	607.50	2633627.3	0.0	210000	10.10
	6270.0	506.98	398580.9	609.0	80769	

Additional static properties of cross section

Alfa-T [1/°K]	ymin ymax [mm]	zmin zmax [mm]	hymin hzmin [mm]	AK AB [cm2]	MB	Tau-T Tau-B [1/m3]	Tau-Vy Tau-Vz [1/m2]
1.2E-05	-405.0	-559.0		7.359E+02		5.226E+02	2.058E+01
	405.0	559.0				1.255E+02	1.974E+01

Section values for warping

Wmin[cm2]	Wmax[cm2]	CM[cm6]	CMS[cm4]	ASwyy[cm6]	ASwzz[cm6]	ry[mm]	rz[mm]
-2172.83	2172.831147244363.		1748581.4	-0.16	-1.04	0.0	0.0

Design values of cross section

Mat NoR	A[cm2] It[cm4]	Ay/Az/Ayz [cm2]	Iy/Iz/Iyz [cm4]	ys/zs [mm]	modules [N/mm2]	gam [kN/m]
1	1286.96	607.50	2633627.3	0.0	182609	10.10
	6270.0	506.98	398580.9	609.0	70234	

Design forces and moments
(C/E = characteristic plastic/elastic, D=plast.Design, F=elast. Design)

	N[kN]	Vy[kN]	Vz[kN]	Mt[kNm]	My[kNm]	Mz[kNm]	y[mm]	z[mm]	BUCK
C	43113.2	14099.76	10791.64	597.83	18116.18	5188.35	0.0	609.0	c d
C	0.0				0.00	0.00	0.0	0.0	COMB
E	43113.2	9399.84	9796.03	370.08	15782.92	3296.90	0.0	609.0	
D	37489.7	12260.66	9384.03	519.85	15753.20	4511.61	0.0	609.0	
D	0.0				0.00	0.00	0.0	0.0	COMB
F	37489.7	8173.78	8518.29	321.81	13724.27	2866.87	0.0	609.0	

Additional Design Data

M	periphery-O/-I [m2/m]	[m2/m]	deff [mm]	t-min [mm]	t-max [mm]	SMP [o/o]	thet-p [tm2/m]	thet-y [tm2/m]	thet-z [tm2/m]	thet-yz [tm2/m]
	5.386		47.8	45.0	52.0	0.0	0.238	0.207	0.031	

SOFiSTiK AG - www.sofistik.de

Composite bridge 38+50+38, b=14.25m, 2x2HL1100R HISTAR460 , slab 0.30m C30/37

Cross section No. 154.5 = CS 30 - in-situ conc:C3

Cross section No. 155 - VFT (151)

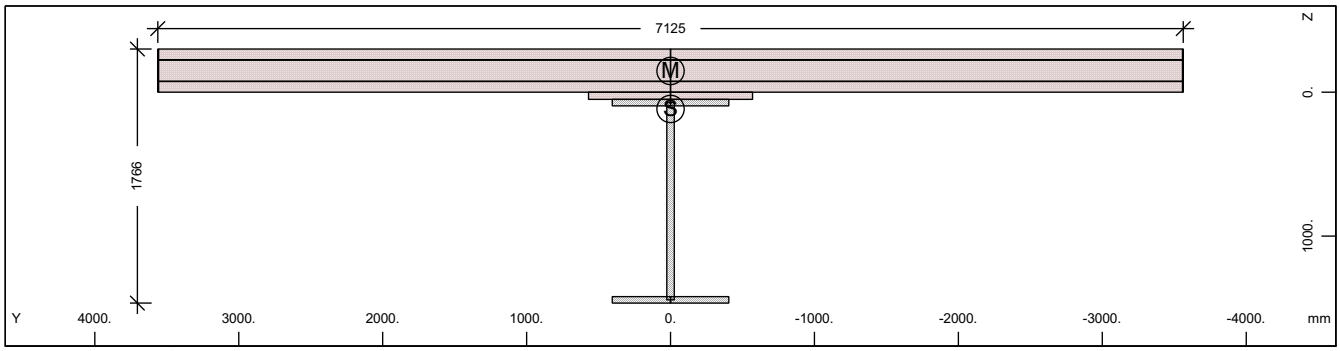

Cross section No. 155 - VFT (151)

Static properties of cross section

Mat NoR	A[cm2] It[cm4]	Ay/Az/Ayz [cm2]	Iy/Iz/Iyz [cm4]	ys/zs [mm]	y/z-sc [mm]	modules [N/mm2]	gam [kN/m]
1	4970.69	3118.65	12929204.	0.0	0.0	210000	66.18
	6270.0	615.29	145603753.	116.5	-147.4	80769	

Additional static properties of cross section

Alfa-T [1/°K]	ymin ymax [mm]	zmin zmax [mm]	hymin hzmin [mm]	AK AB [cm2]	MB	Tau-T Tau-B [1/m3]	Tau-Vy Tau-Vz [1/m2]
1.2E-05	-3562.5	-416.5		1.439E+04		4.741E+00	4.139E+00
	3562.5	1349.3		2.195E+04		1.255E+02	1.400E+01

Section values for warping

Wmin[cm2]	Wmax[cm2]	CM[cm6]	CMS[cm4]	ASwyy[cm6]	ASwzz[cm6]	ry[mm]	rz[mm]
-6442.46	6442.46	5420128837.	1820753.5	2726.51	242.11	0.0	-1524.7

Partial cross sections

Mat NoR	A[cm2] It[cm4]	Ay/Az/Ayz [cm2]	Iy/Iz/Iyz [cm4]	ys/zs [mm]	modules [N/mm2]	gam [kN/m]
1	1441.83	0.12	4541099.5	0.0	210000	11.32
	11345.8	395.23	398580.9	757.9	80769	
30	21915.00	17819.13	170022.2	0.0	32837	54.79
	6408250.4	1254.85	901077848.	-145.4	13682	
31	30.00	0.00	0.0	0.0	0	0.08
	9000.6	0.00	3802349.1	-150.0	0	
300	107.24	105.06	6032.1	0.0	200000	0.00
	0.2	7.87	4523914.0	-150.0	76923	

Design values of cross section

Mat NoR	A[cm2] It[cm4]	Ay/Az/Ayz [cm2]	Iy/Iz/Iyz [cm4]	ys/zs [mm]	modules [N/mm2]	gam [kN/m]
1	4171.12	2414.34	12269219.	0.0	182609	66.18
	6270.0	565.69	112727857.	166.7	70234	

Design forces and moments
(C/E = characteristic plastic/elastic, D=plast.Design, F=elast. Design)

	N[kN]	Vy[kN]	Vz[kN]	Mt[kNm]	My[kNm]	Mz[kNm]	y[mm]	z[mm]	BUCK
C	53663.3	53404.68	42587.53	99243.91	46043.83	71272.98	125.0	-75.3	c d
C	-48849.7				50764.04	0.00	0.0	116.5	COMB
C	-32917.5				0.00	72148.23	0.0	0.0	COMB
C	-119498.	53404.68	42587.52	99243.88	-29378.3	-71273.0	-125.	603.8	
C	-16985.3				-33518.6	0.00	0.0	116.5	COMB
C	-32917.5				0.00	-72148.2	0.0	0.0	COMB
E	166518.2	24280.53	13813.45	3561.38	32099.30	78525.45	0.0	116.5	
E	-95367.4	24280.53	13813.45	3561.38	-32099.3	-78525.5	0.0	116.5	
D	46663.7	39092.05	31725.28	66313.45	38842.56	50820.15	25.5	-38.0	

SOFiSTiK AG - www.sofistik.de

Composite bridge 38+50+38, b=14.25m, 2x2HL1100R HISTAR460 , slab 0.30m C30/37

Design forces and moments
(C/E = characteristic plastic/elastic, D=plast.Design, F=elast. Design)

	N[kN]	Vy[kN]	Vz[kN]	Mt[kNm]	My[kNm]	Mz[kNm]	y[mm]	z[mm]	BUCK
D	-29120.2				40643.57	0.00	0.0	116.5	COMB
D	-21945.0				0.00	51100.34	0.0	0.0	COMB
D	-90553.7	39092.05	31725.28	66313.45	-25546.3	-50820.1	-25.5	603.3	
D	-14769.8				-29146.6	0.00	0.0	116.5	COMB
D	-21945.0				0.00	-51100.3	0.0	0.0	COMB
F	144798.5	16187.02	9593.85	2374.25	27912.43	52350.30	0.0	116.5	
F	-63578.3	16187.02	9593.85	2374.25	-27912.4	-52350.3	0.0	116.5	

Additional Design Data

M	periphery-O/-I [m2/m]	[m2/m]	deff [mm]	t-min [mm]	t-max [mm]	SMP [o/o]	thet-p [tm2/m]	thet-y [tm2/m]	thet-z [tm2/m]	thet-yz [tm2/m]
	50.972		19.5	0.8	300.0	0.0	23.780	1.126	22.653	
1	5.982		48.2	45.0	52.0	0.0	0.388	0.356	0.031	
30	16.510		600.0	50.0	300.0	0.0	22.531	0.004	22.527	
31	0.020		300.0	300.0	300.0	0.0	0.095		0.095	
**	28.460		0.8	0.8	0.8	0.0	0.000	0.000	0.000	

Cross section No. 155.1 = CS 1 - steel alone

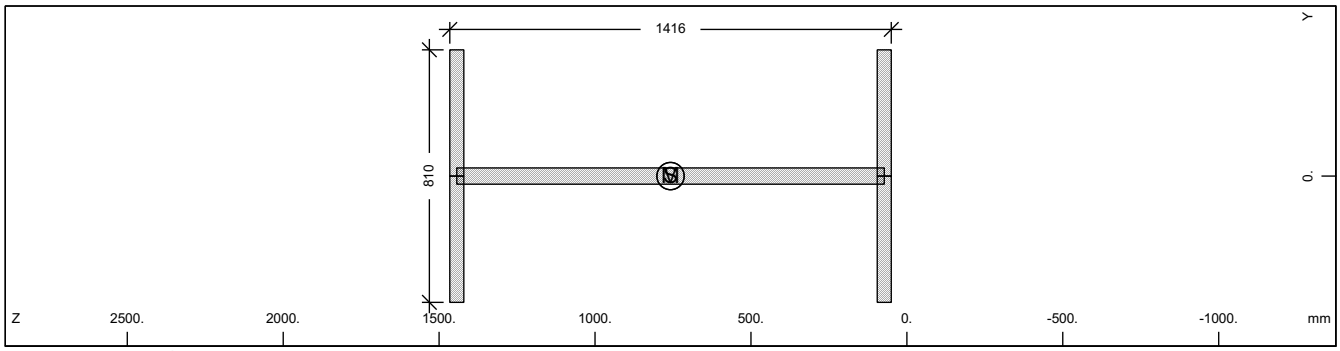

Cross section No. 155

Static properties of cross section

Mat NoR	A[cm2] It[cm4]	Ay/Az/Ayz [cm2]	Iy/Iz/Iyz [cm4]	ys/zs [mm]	modules [N/mm2]	gam [kN/m]
1	1441.83	607.50	4541099.5	0.0	210000	11.32
	6270.0	661.98	398580.9	757.9	80769	

Additional static properties of cross section

Alfa-T [1/°K]	ymin ymax [mm]	zmin zmax [mm]	hymin hzmin [mm]	AK AB [cm2]	MB	Tau-T Tau-B [1/m3]	Tau-Vy Tau-Vz [1/m2]
1.2E-05	-405.0	-707.9		8.392E+02		4.583E+02	2.058E+01
	405.0	707.9				1.255E+02	1.575E+01

Section values for warping

Wmin[cm2]	Wmax[cm2]	CM[cm6]	CMS[cm4]	ASwyy[cm6]	ASwzz[cm6]	ry[mm]	rz[mm]
-2775.94	2775.941872516361.	2854010.1		-3.83	-43.63	0.0	0.0

Design values of cross section

Mat NoR	A[cm2] It[cm4]	Ay/Az/Ayz [cm2]	Iy/Iz/Iyz [cm4]	ys/zs [mm]	modules [N/mm2]	gam [kN/m]
1	1441.83	607.50	4541099.5	0.0	182609	11.32
	6270.0	661.98	398580.9	757.9	70234	

Design forces and moments
(C/E = characteristic plastic/elastic, D=plast.Design, F=elast. Design)

	N[kN]	Vy[kN]	Vz[kN]	Mt[kNm]	My[kNm]	Mz[kNm]	y[mm]	z[mm]	BUCK
C	48301.4	14099.76	13787.08	675.71	24922.75	5255.79	0.0	757.9	c d
C	0.0				0.00	0.00	0.0	0.0	COMB
E	48301.4	9399.84	12277.99	422.00	21489.37	3296.90	0.0	757.9	
D	42001.2	12260.66	11988.76	587.57	21671.96	4570.26	0.0	757.9	

SOFiSTiK AG - www.sofistik.de

Composite bridge 38+50+38, b=14.25m, 2x2HL1100R HISTAR460 , slab 0.30m C30/37

Design forces and moments
(C/E = characteristic plastic/elastic, D=plast.Design, F=elast. Design)

	N[kN]	Vy[kN]	Vz[kN]	Mt[kNm]	My[kNm]	Mz[kNm]	y[mm]	z[mm]	BUCK
D	0.0				0.00	0.00	0.0	0.0	COMB
F	42001.2	8173.78	10676.52	366.96	18686.41	2866.87	0.0	757.9	

Additional Design Data

M	periphery-O/-I [m2/m]	[m2/m]	deff [mm]	t-min [mm]	t-max [mm]	SMP [o/o]	thet-p [tm2/m]	thet-y [tm2/m]	thet-z [tm2/m]	thet-yz [tm2/m]
	5.982		48.2	45.0	52.0	0.0	0.388	0.356	0.031	

Cross section No. 155.2 = CS 10 - prefab. slab C1

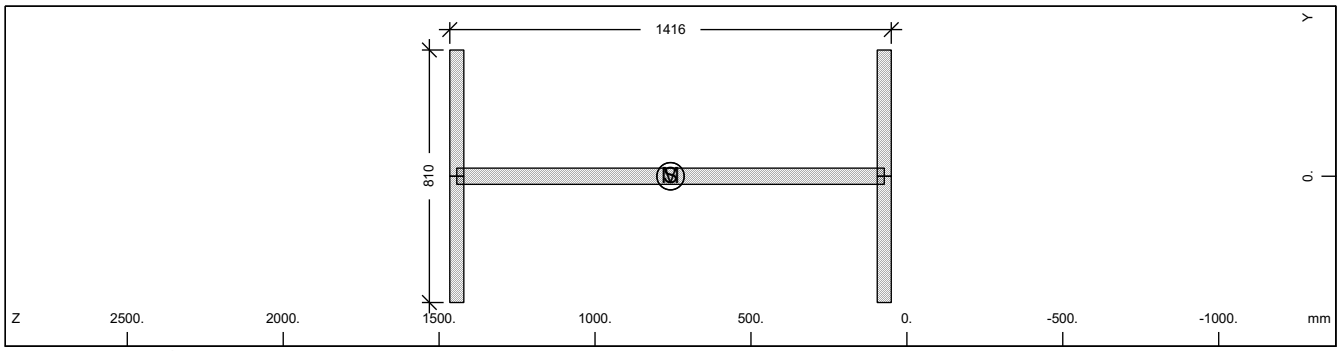

Cross section No. 155

Static properties of cross section

Mat NoR	A[cm2] It[cm4]	Ay/Az/Ayz [cm2]	Iy/Iz/Iyz [cm4]	ys/zs [mm]	modules [N/mm2]	gam [kN/m]
1	1441.83	607.50	4541099.5	0.0	210000	11.32
	6270.0	661.98	398580.9	757.9	80769	

Additional static properties of cross section

Alfa-T [1/°K]	ymin ymax [mm]	zmin zmax [mm]	hymin hzmin [mm]	AK AB [cm2]	MB	Tau-T Tau-B [1/m3]	Tau-Vy Tau-Vz [1/m2]
1.2E-05	-405.0	-707.9		8.392E+02		4.583E+02	2.058E+01
	405.0	707.9				1.255E+02	1.575E+01

Section values for warping

Wmin[cm2]	Wmax[cm2]	CM[cm6]	CMS[cm4]	ASwyy[cm6]	ASwzz[cm6]	ry[mm]	rz[mm]
-2775.94	2775.941872516361.		2854010.1	-3.83	-43.63	0.0	0.0

Design values of cross section

Mat NoR	A[cm2] It[cm4]	Ay/Az/Ayz [cm2]	Iy/Iz/Iyz [cm4]	ys/zs [mm]	modules [N/mm2]	gam [kN/m]
1	1441.83	607.50	4541099.5	0.0	182609	11.32
	6270.0	661.98	398580.9	757.9	70234	

Design forces and moments
(C/E = characteristic plastic/elastic, D=plast.Design, F=elast. Design)

	N[kN]	Vy[kN]	Vz[kN]	Mt[kNm]	My[kNm]	Mz[kNm]	y[mm]	z[mm]	BUCK
C	48301.4	14099.76	13787.08	675.71	24922.75	5255.79	0.0	757.9	c d
C	0.0				0.00	0.00	0.0	0.0	COMB
E	48301.4	9399.84	12277.99	422.00	21489.37	3296.90	0.0	757.9	
D	42001.2	12260.66	11988.76	587.57	21671.96	4570.26	0.0	757.9	
D	0.0				0.00	0.00	0.0	0.0	COMB
F	42001.2	8173.78	10676.52	366.96	18686.41	2866.87	0.0	757.9	

Additional Design Data

M	periphery-O/-I [m2/m]	[m2/m]	deff [mm]	t-min [mm]	t-max [mm]	SMP [o/o]	thet-p [tm2/m]	thet-y [tm2/m]	thet-z [tm2/m]	thet-yz [tm2/m]
	5.982		48.2	45.0	52.0	0.0	0.388	0.356	0.031	

SOFiSTiK AG - www.sofistik.de

Composite bridge 38+50+38, b=14.25m, 2x2HL1100R HISTAR460 , slab 0.30m C30/37

Cross section No. 155.3 = CS 20 - in-situ conc:C2

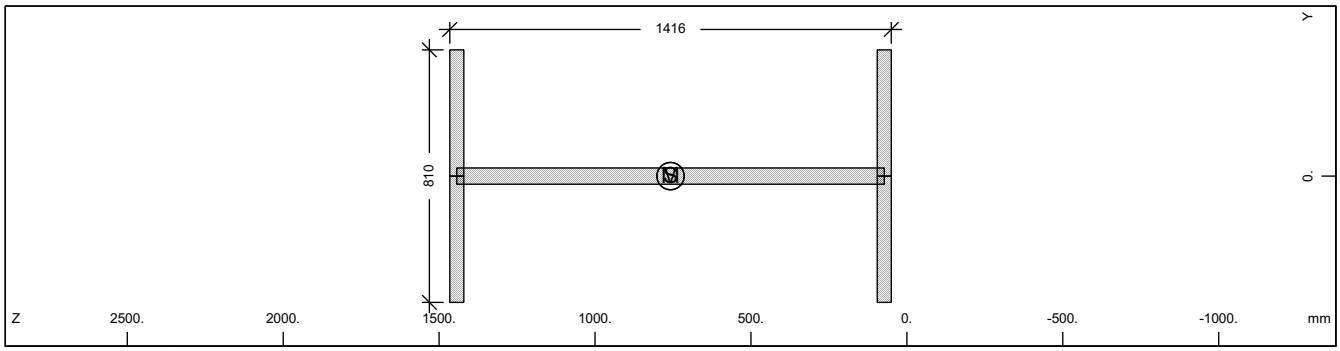

Cross section No. 155

Static properties of cross section

Mat NoR	A[cm2] It[cm4]	Ay/Az/Ayz [cm2]	Iy/Iz/Iyz [cm4]	ys/zs [mm]	modules [N/mm2]	gam [kN/m]
1	1441.83	607.50	4541099.5	0.0	210000	11.32
	6270.0	661.98	398580.9	757.9	80769	

Additional static properties of cross section

Alfa-T [1/°K]	ymin ymax [mm]	zmin zmax [mm]	hymin hzmin [mm]	AK AB [cm2]	MB	Tau-T Tau-B [1/m3]	Tau-Vy Tau-Vz [1/m2]
1.2E-05	-405.0	-707.9		8.392E+02		4.583E+02	2.058E+01
	405.0	707.9				1.255E+02	1.575E+01

Section values for warping

Wmin[cm2]	Wmax[cm2]	CM[cm6]	CMS[cm4]	ASwyy[cm6]	ASwzz[cm6]	ry[mm]	rz[mm]
-2775.94	2775.941872516361.		2854010.1	-3.83	-43.63	0.0	0.0

Design values of cross section

Mat NoR	A[cm2] It[cm4]	Ay/Az/Ayz [cm2]	Iy/Iz/Iyz [cm4]	ys/zs [mm]	modules [N/mm2]	gam [kN/m]
1	1441.83	607.50	4541099.5	0.0	182609	11.32
	6270.0	661.98	398580.9	757.9	70234	

Design forces and moments
(C/E = characteristic plastic/elastic, D=plast.Design, F=elast. Design)

	N[kN]	Vy[kN]	Vz[kN]	Mt[kNm]	My[kNm]	Mz[kNm]	y[mm]	z[mm]	BUCK
C	48301.4	14099.76	13787.08	675.71	24922.75	5255.79	0.0	757.9	c d
C	0.0				0.00	0.00	0.0	0.0	COMB
E	48301.4	9399.84	12277.99	422.00	21489.37	3296.90	0.0	757.9	
D	42001.2	12260.66	11988.76	587.57	21671.96	4570.26	0.0	757.9	
D	0.0				0.00	0.00	0.0	0.0	COMB
F	42001.2	8173.78	10676.52	366.96	18686.41	2866.87	0.0	757.9	

Additional Design Data

M	periphery-O/-I [m2/m] [m2/m]	deff [mm]	t-min [mm]	t-max [mm]	SMP [o/o]	thet-p [tm2/m]	thet-y [tm2/m]	thet-z [tm2/m]	thet-yz [tm2/m]
	5.982	48.2	45.0	52.0	0.0	0.388	0.356	0.031	

SOFiSTiK AG - www.sofistik.de

Composite bridge 38+50+38, b=14.25m, 2x2HL1100R HISTAR460 , slab 0.30m C30/37

Cross section No. 155.4 = CS 21 - reinf active:C2

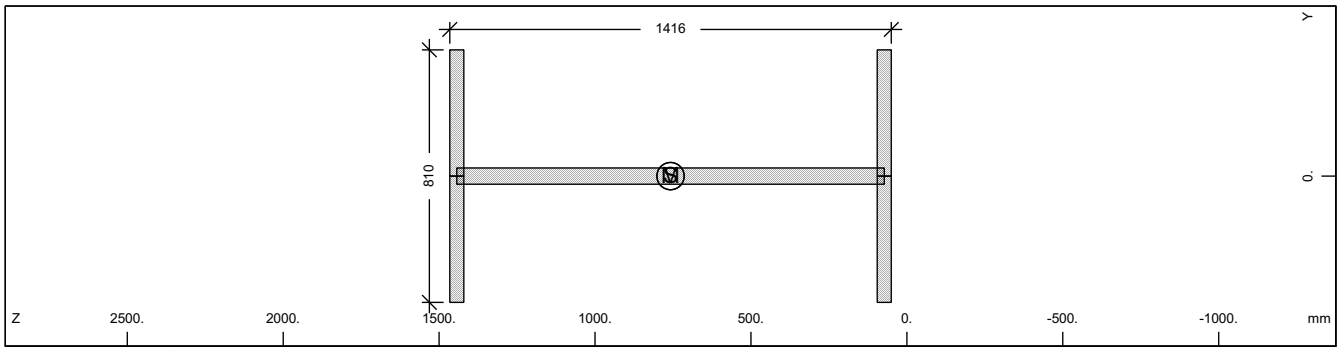

Cross section No. 155

Static properties of cross section

Mat NoR	A[cm2] It[cm4]	Ay/Az/Ayz [cm2]	Iy/Iz/Iyz [cm4]	ys/zs [mm]	modules [N/mm2]	gam [kN/m]
1	1441.83	607.50	4541099.5	0.0	210000	11.32
	6270.0	661.98	398580.9	757.9	80769	

Additional static properties of cross section

Alfa-T [1/°K]	ymin ymax [mm]	zmin zmax [mm]	hymin hzmin [mm]	AK AB [cm2]	MB	Tau-T Tau-B [1/m3]	Tau-Vy Tau-Vz [1/m2]
1.2E-05	-405.0	-707.9		8.392E+02		4.583E+02	2.058E+01
	405.0	707.9				1.255E+02	1.575E+01

Section values for warping

Wmin[cm2]	Wmax[cm2]	CM[cm6]	CMS[cm4]	ASwyy[cm6]	ASwzz[cm6]	ry[mm]	rz[mm]
-2775.94	2775.941872516361.		2854010.1	-3.83	-43.63	0.0	0.0

Design values of cross section

Mat NoR	A[cm2] It[cm4]	Ay/Az/Ayz [cm2]	Iy/Iz/Iyz [cm4]	ys/zs [mm]	modules [N/mm2]	gam [kN/m]
1	1441.83	607.50	4541099.5	0.0	182609	11.32
	6270.0	661.98	398580.9	757.9	70234	

Design forces and moments
(C/E = characteristic plastic/elastic, D=plast.Design, F=elast. Design)

	N[kN]	Vy[kN]	Vz[kN]	Mt[kNm]	My[kNm]	Mz[kNm]	y[mm]	z[mm]	BUCK
C	48301.4	14099.76	13787.08	675.71	24922.75	5255.79	0.0	757.9	c d
C	0.0				0.00	0.00	0.0	0.0	COMB
E	48301.4	9399.84	12277.99	422.00	21489.37	3296.90	0.0	757.9	
D	42001.2	12260.66	11988.76	587.57	21671.96	4570.26	0.0	757.9	
D	0.0				0.00	0.00	0.0	0.0	COMB
F	42001.2	8173.78	10676.52	366.96	18686.41	2866.87	0.0	757.9	

Additional Design Data

M	periphery-O/-I [m2/m]	[m2/m]	deff [mm]	t-min [mm]	t-max [mm]	SMP [o/o]	thet-p [tm2/m]	thet-y [tm2/m]	thet-z [tm2/m]	thet-yz [tm2/m]
	5.982		48.2	45.0	52.0	0.0	0.388	0.356	0.031	

SOFiSTiK AG - www.sofistik.de

Composite bridge 38+50+38, b=14.25m, 2x2HL1100R HISTAR460 , slab 0.30m C30/37

Cross section No. 155.5 = CS 30 - in-situ conc:C3

Cross section No. 156 - VFT (151)

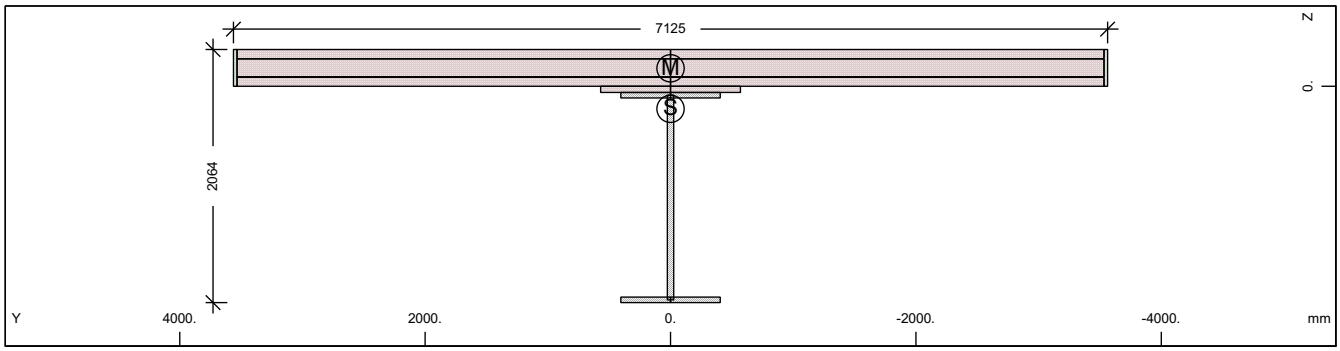

Cross section No. 156 - VFT (151)

Static properties of cross section

Mat NoR	A[cm2] It[cm4]	Ay/Az/Ayz [cm2]	Iy/Iz/Iyz [cm4]	ys/zs [mm]	y/z-sc [mm]	modules [N/mm2]	gam [kN/m]
1	5101.96	3097.68	19270058.	0.0	0.0	210000	67.40
	6270.0	761.33	142636288.	183.8	-146.9	80769	

Additional static properties of cross section

Alfa-T [1/°K]	ymin ymax [mm]	zmin zmax [mm]	hymin hzmin [mm]	AK AB [cm2]	MB	Tau-T Tau-B [1/m3]	Tau-Vy Tau-Vz [1/m2]
1.2E-05	-3562.5	-483.8		1.431E+04		4.767E+00	4.167E+00
	3562.5	1579.9		2.195E+04		1.255E+02	1.196E+01

Section values for warping

Wmin[cm2]	Wmax[cm2]	CM[cm6]	CMS[cm4]	ASwyy[cm6]	ASwzz[cm6]	ry[mm]	rz[mm]
-7646.83	7646.83	7479889348.	3246883.7	5556.83	750.72	0.0	-742.0

Partial cross sections

Mat NoR	A[cm2] It[cm4]	Ay/Az/Ayz [cm2]	Iy/Iz/Iyz [cm4]	ys/zs [mm]	modules [N/mm2]	gam [kN/m]
1	1596.71	0.12	7088169.5	0.0	210000	12.53
	12741.7	528.40	398580.9	906.8	80769	
30	21768.50	17699.28	169991.7	0.0	32837	54.42
	6364299.4	1329.49	882663541.	-145.4	13682	
31	176.51	0.03	0.0	0.0	0	0.44
	52952.0	0.00	22216693.	-150.0	0	
300	106.50	104.36	5990.7	0.0	200000	0.00
	0.2	8.11	4431400.1	-150.0	76923	

Design values of cross section

Mat NoR	A[cm2] It[cm4]	Ay/Az/Ayz [cm2]	Iy/Iz/Iyz [cm4]	ys/zs [mm]	modules [N/mm2]	gam [kN/m]
1	4307.74	2398.11	18244293.	0.0	182609	67.40
	6270.0	708.79	110432244.	244.5	70234	

Design forces and moments
(C/E = characteristic plastic/elastic, D=plast.Design, F=elast. Design)

	N[kN]	Vy[kN]	Vz[kN]	Mt[kNm]	My[kNm]	Mz[kNm]	y[mm]	z[mm]	BUCK
C	58814.9	53383.44	45583.08	99321.78	58328.36	71604.87	53.2	-74.6	c d
C	-45969.6				65063.41	0.00	0.0	183.8	COMB
C	-32917.5				0.00	72085.20	0.0	0.0	COMB
C	-124650.	53383.44	45583.08	99321.79	-37723.0	-71604.9	-53.2	753.9	
C	-19865.4				-43386.6	0.00	0.0	183.8	COMB
C	-32917.5				0.00	-72085.2	0.0	0.0	COMB
E	170915.8	24115.59	16173.97	3541.74	40860.71	77456.71	0.0	183.8	
E	-97885.9	24115.59	16173.97	3541.74	-40860.7	-77456.7	0.0	183.8	
D	51143.4	39073.58	34330.11	66381.16	49284.17	50812.42	21.2	-6.1	

SOFiSTiK AG - www.sofistik.de

Composite bridge 38+50+38, b=14.25m, 2x2HL1100R HISTAR460 , slab 0.30m C30/37

Design forces and moments
(C/E = characteristic plastic/elastic, D=plast.Design, F=elast. Design)

	N[kN]	Vy[kN]	Vz[kN]	Mt[kNm]	My[kNm]	Mz[kNm]	y[mm]	z[mm]	BUCK
D	-26615.7				52178.68	0.00	0.0	183.8	COMB
D	-21945.0				0.00	51045.54	0.0	0.0	COMB
D	-95033.4	39073.58	34330.11	66381.17	-32802.6	-50812.4	-21.2	753.7	
D	-17274.3				-37727.4	0.00	0.0	183.8	COMB
D	-21945.0				0.00	-51045.5	0.0	0.0	COMB
F	148622.5	16077.06	11494.49	2361.16	35531.05	51637.81	0.0	183.8	
F	-65257.3	16077.06	11494.49	2361.16	-35531.1	-51637.8	0.0	183.8	

Additional Design Data

M	periphery-O/-I [m2/m]	[m2/m]	deff [mm]	t-min [mm]	t-max [mm]	SMP [o/o]	thet-p [tm2/m]	thet-y [tm2/m]	thet-z [tm2/m]	thet-yz [tm2/m]
	51.372		19.9	0.8	300.0	0.0	24.344	1.690	22.653	
1	6.577		48.6	45.0	52.0	0.0	0.588	0.556	0.031	
30	16.412		600.0	50.0	300.0	0.0	22.071	0.004	22.067	
31	0.118		300.0	300.0	300.0	0.0	0.555		0.555	
**	28.265		0.8	0.8	0.8	0.0	0.000	0.000	0.000	

Cross section No. 156.1 = CS 1 - steel alone

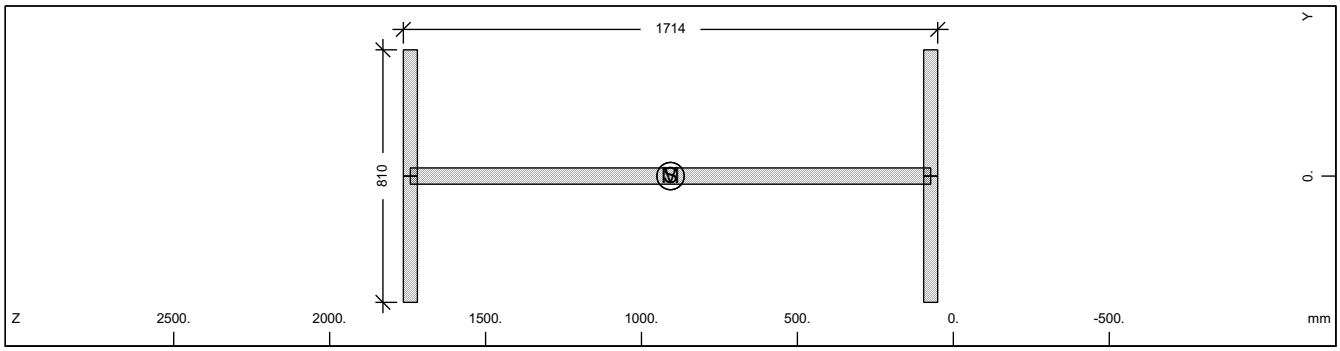

Cross section No. 156

Static properties of cross section

Mat NoR	A[cm2] It[cm4]	Ay/Az/Ayz [cm2]	Iy/Iz/Iyz [cm4]	ys/zs [mm]	modules [N/mm2]	gam [kN/m]
1	1596.71	607.50	7088169.5	0.0	210000	12.53
	6270.0	815.48	398580.9	906.8	80769	

Additional static properties of cross section

Alfa-T [1/°K]	ymin ymax [mm]	zmin zmax [mm]	hymin hzmin [mm]	AK AB [cm2]	MB	Tau-T Tau-B [1/m3]	Tau-Vy Tau-Vz [1/m2]
1.2E-05	-405.0	-856.8		9.424E+02		4.081E+02	2.058E+01
	405.0	856.8				1.255E+02	1.316E+01

Section values for warping

Wmin[cm2]	Wmax[cm2]	CM[cm6]	CMS[cm4]	ASwyy[cm6]	ASwzz[cm6]	ry[mm]	rz[mm]
-3379.07	3379.072774606703.		4228938.0	-0.65	-11.63	0.0	0.0

Design values of cross section

Mat NoR	A[cm2] It[cm4]	Ay/Az/Ayz [cm2]	Iy/Iz/Iyz [cm4]	ys/zs [mm]	modules [N/mm2]	gam [kN/m]
1	1596.71	607.50	7088169.5	0.0	182609	12.53
	6270.0	815.48	398580.9	906.8	70234	

Design forces and moments
(C/E = characteristic plastic/elastic, D=plast.Design, F=elast. Design)

	N[kN]	Vy[kN]	Vz[kN]	Mt[kNm]	My[kNm]	Mz[kNm]	y[mm]	z[mm]	BUCK
C	53489.9	14099.76	16782.63	753.59	32502.25	5323.24	0.0	906.8	c d
C	0.0				0.00	0.00	0.0	0.0	COMB
E	53489.9	9399.84	14695.46	473.92	27712.76	3296.90	0.0	906.8	
D	46512.9	12260.66	14593.59	655.30	28262.82	4628.91	0.0	906.8	

SOFiSTiK AG - www.sofistik.de

Composite bridge 38+50+38, b=14.25m, 2x2HL1100R HISTAR460 , slab 0.30m C30/37

Design forces and moments
(C/E = characteristic plastic/elastic, D=plast.Design, F=elast. Design)

	N[kN]	Vy[kN]	Vz[kN]	Mt[kNm]	My[kNm]	Mz[kNm]	y[mm]	z[mm]	BUCK
D	0.0				0.00	0.00	0.0	0.0	COMB
F	46512.9	8173.78	12778.66	412.11	24098.05	2866.87	0.0	906.8	

Additional Design Data

M	periphery-O/-I [m2/m]	[m2/m]	deff [mm]	t-min [mm]	t-max [mm]	SMP [o/o]	thet-p [tm2/m]	thet-y [tm2/m]	thet-z [tm2/m]	thet-yz [tm2/m]
	6.577		48.6	45.0	52.0	0.0	0.588	0.556	0.031	

Cross section No. 156.2 = CS 10 - prefab. slab C1

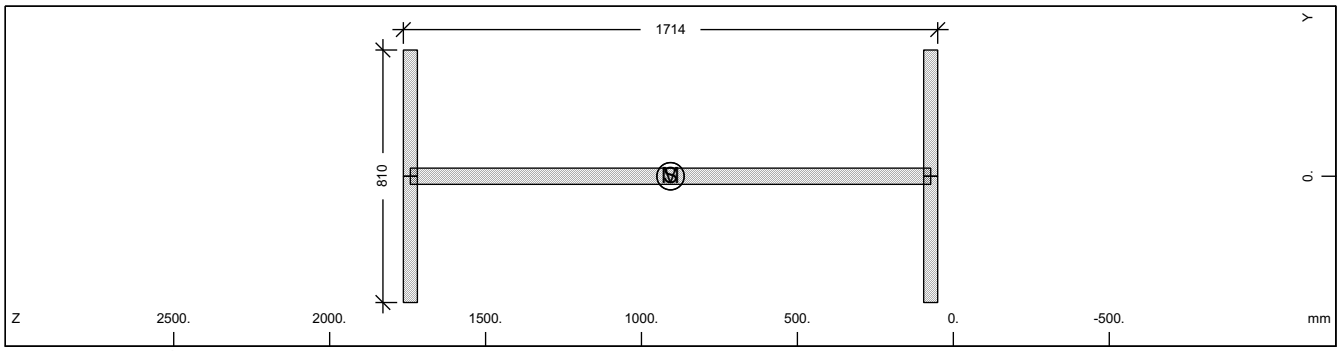

Cross section No. 156

Static properties of cross section

Mat NoR	A[cm2] It[cm4]	Ay/Az/Ayz [cm2]	Iy/Iz/Iyz [cm4]	ys/zs [mm]	modules [N/mm2]	gam [kN/m]
1	1596.71	607.50	7088169.5	0.0	210000	12.53
	6270.0	815.48	398580.9	906.8	80769	

Additional static properties of cross section

Alfa-T [1/°K]	ymin ymax [mm]	zmin zmax [mm]	hymin hzmin [mm]	AK AB [cm2]	MB	Tau-T Tau-B [1/m3]	Tau-Vy Tau-Vz [1/m2]
1.2E-05	-405.0	-856.8		9.424E+02		4.081E+02	2.058E+01
	405.0	856.8				1.255E+02	1.316E+01

Section values for warping

Wmin[cm2]	Wmax[cm2]	CM[cm6]	CMS[cm4]	ASwyy[cm6]	ASwzz[cm6]	ry[mm]	rz[mm]
-3379.07	3379.072774606703.		4228938.0	-0.65	-11.63	0.0	0.0

Design values of cross section

Mat NoR	A[cm2] It[cm4]	Ay/Az/Ayz [cm2]	Iy/Iz/Iyz [cm4]	ys/zs [mm]	modules [N/mm2]	gam [kN/m]
1	1596.71	607.50	7088169.5	0.0	182609	12.53
	6270.0	815.48	398580.9	906.8	70234	

Design forces and moments
(C/E = characteristic plastic/elastic, D=plast.Design, F=elast. Design)

	N[kN]	Vy[kN]	Vz[kN]	Mt[kNm]	My[kNm]	Mz[kNm]	y[mm]	z[mm]	BUCK
C	53489.9	14099.76	16782.63	753.59	32502.25	5323.24	0.0	906.8	c d
C	0.0				0.00	0.00	0.0	0.0	COMB
E	53489.9	9399.84	14695.46	473.92	27712.76	3296.90	0.0	906.8	
D	46512.9	12260.66	14593.59	655.30	28262.82	4628.91	0.0	906.8	
D	0.0				0.00	0.00	0.0	0.0	COMB
F	46512.9	8173.78	12778.66	412.11	24098.05	2866.87	0.0	906.8	

Additional Design Data

M	periphery-O/-I [m2/m]	[m2/m]	deff [mm]	t-min [mm]	t-max [mm]	SMP [o/o]	thet-p [tm2/m]	thet-y [tm2/m]	thet-z [tm2/m]	thet-yz [tm2/m]
	6.577		48.6	45.0	52.0	0.0	0.588	0.556	0.031	

SOFiSTiK AG - www.sofistik.de

Composite bridge 38+50+38, b=14.25m, 2x2HL1100R HISTAR460 , slab 0.30m C30/37

Cross section No. 156.3 = CS 20 - in-situ conc:C2

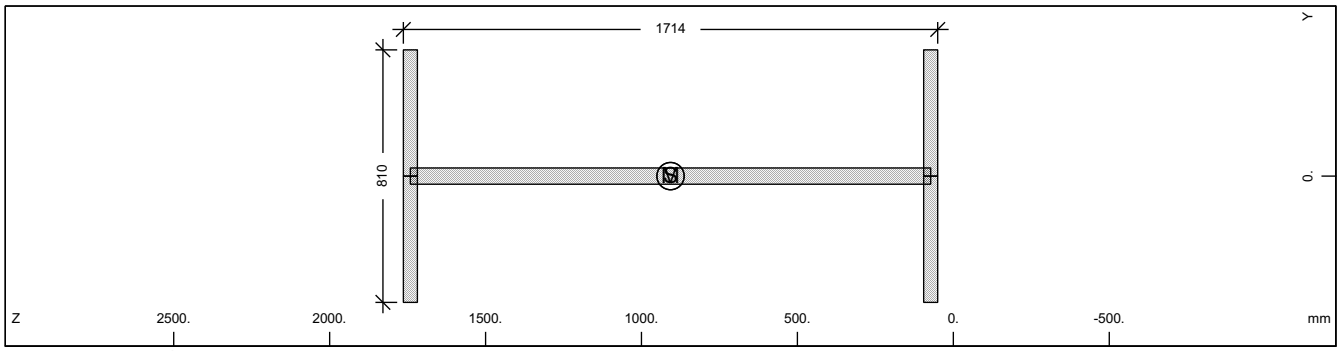

Cross section No. 156

Static properties of cross section

Mat NoR	A[cm2] It[cm4]	Ay/Az/Ayz [cm2]	Iy/Iz/Iyz [cm4]	ys/zs [mm]	modules [N/mm2]	gam [kN/m]
1	1596.71	607.50	7088169.5	0.0	210000	12.53
	6270.0	815.48	398580.9	906.8	80769	

Additional static properties of cross section

Alfa-T [1/°K]	ymin ymax [mm]	zmin zmax [mm]	hymin hzmin [mm]	AK AB [cm2]	MB	Tau-T Tau-B [1/m3]	Tau-Vy Tau-Vz [1/m2]
1.2E-05	-405.0	-856.8		9.424E+02		4.081E+02	2.058E+01
	405.0	856.8				1.255E+02	1.316E+01

Section values for warping

Wmin[cm2]	Wmax[cm2]	CM[cm6]	CMS[cm4]	ASwyy[cm6]	ASwzz[cm6]	ry[mm]	rz[mm]
-3379.07	3379.072774606703.		4228938.0	-0.65	-11.63	0.0	0.0

Design values of cross section

Mat NoR	A[cm2] It[cm4]	Ay/Az/Ayz [cm2]	Iy/Iz/Iyz [cm4]	ys/zs [mm]	modules [N/mm2]	gam [kN/m]
1	1596.71	607.50	7088169.5	0.0	182609	12.53
	6270.0	815.48	398580.9	906.8	70234	

Design forces and moments
(C/E = characteristic plastic/elastic, D=plast.Design, F=elast. Design)

	N[kN]	Vy[kN]	Vz[kN]	Mt[kNm]	My[kNm]	Mz[kNm]	y[mm]	z[mm]	BUCK
C	53489.9	14099.76	16782.63	753.59	32502.25	5323.24	0.0	906.8	c d
C	0.0				0.00	0.00	0.0	0.0	COMB
E	53489.9	9399.84	14695.46	473.92	27712.76	3296.90	0.0	906.8	
D	46512.9	12260.66	14593.59	655.30	28262.82	4628.91	0.0	906.8	
D	0.0				0.00	0.00	0.0	0.0	COMB
F	46512.9	8173.78	12778.66	412.11	24098.05	2866.87	0.0	906.8	

Additional Design Data

M	periphery-O/-I [m2/m] [m2/m]	deff [mm]	t-min [mm]	t-max [mm]	SMP [o/o]	thet-p [tm2/m]	thet-y [tm2/m]	thet-z [tm2/m]	thet-yz [tm2/m]
	6.577	48.6	45.0	52.0	0.0	0.588	0.556	0.031	

SOFiSTiK AG - www.sofistik.de

Composite bridge 38+50+38, b=14.25m, 2x2HL1100R HISTAR460 , slab 0.30m C30/37

Cross section No. 156.4 = CS 21 - reinf active:C2

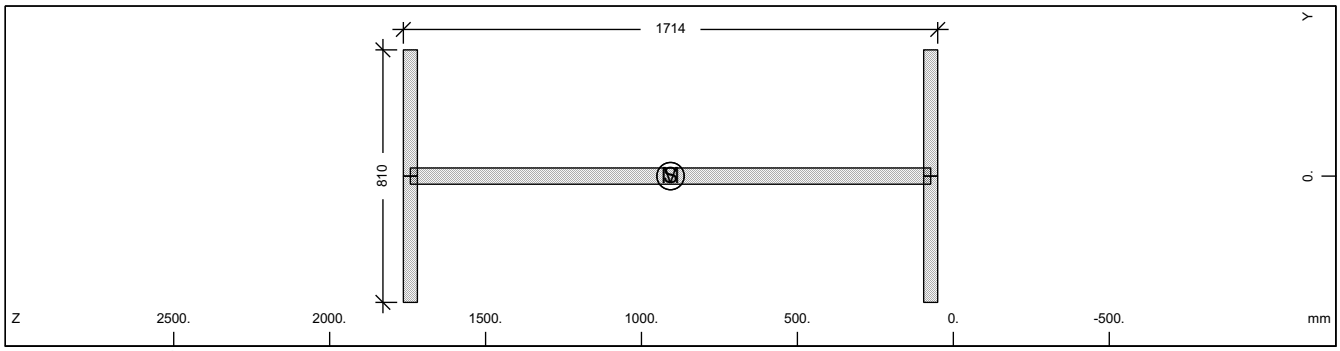

Cross section No. 156

Static properties of cross section

Mat NoR	A[cm2] It[cm4]	Ay/Az/Ayz [cm2]	Iy/Iz/Iyz [cm4]	ys/zs [mm]	modules [N/mm2]	gam [kN/m]
1	1596.71	607.50	7088169.5	0.0	210000	12.53
	6270.0	815.48	398580.9	906.8	80769	

Additional static properties of cross section

Alfa-T [1/°K]	ymin ymax [mm]	zmin zmax [mm]	hymin hzmin [mm]	AK AB [cm2]	MB	Tau-T Tau-B [1/m3]	Tau-Vy Tau-Vz [1/m2]
1.2E-05	-405.0	-856.8		9.424E+02		4.081E+02	2.058E+01
	405.0	856.8				1.255E+02	1.316E+01

Section values for warping

Wmin[cm2]	Wmax[cm2]	CM[cm6]	CMS[cm4]	ASwyy[cm6]	ASwzz[cm6]	ry[mm]	rz[mm]
-3379.07	3379.072774606703.		4228938.0	-0.65	-11.63	0.0	0.0

Design values of cross section

Mat NoR	A[cm2] It[cm4]	Ay/Az/Ayz [cm2]	Iy/Iz/Iyz [cm4]	ys/zs [mm]	modules [N/mm2]	gam [kN/m]
1	1596.71	607.50	7088169.5	0.0	182609	12.53
	6270.0	815.48	398580.9	906.8	70234	

Design forces and moments
(C/E = characteristic plastic/elastic, D=plast.Design, F=elast. Design)

	N[kN]	Vy[kN]	Vz[kN]	Mt[kNm]	My[kNm]	Mz[kNm]	y[mm]	z[mm]	BUCK
C	53489.9	14099.76	16782.63	753.59	32502.25	5323.24	0.0	906.8	c d
C	0.0				0.00	0.00	0.0	0.0	COMB
E	53489.9	9399.84	14695.46	473.92	27712.76	3296.90	0.0	906.8	
D	46512.9	12260.66	14593.59	655.30	28262.82	4628.91	0.0	906.8	
D	0.0				0.00	0.00	0.0	0.0	COMB
F	46512.9	8173.78	12778.66	412.11	24098.05	2866.87	0.0	906.8	

Additional Design Data

M	periphery-O/-I [m2/m] [m2/m]	deff [mm]	t-min [mm]	t-max [mm]	SMP [o/o]	thet-p [tm2/m]	thet-y [tm2/m]	thet-z [tm2/m]	thet-yz [tm2/m]
	6.577	48.6	45.0	52.0	0.0	0.588	0.556	0.031	

SOFiSTiK AG - www.sofistik.de

Composite bridge 38+50+38, b=14.25m, 2x2HL1100R HISTAR460 , slab 0.30m C30/37

Cross section No. 156.5 = CS 30 - in-situ conc:C3

Cross section No. 157 - VFT (151)

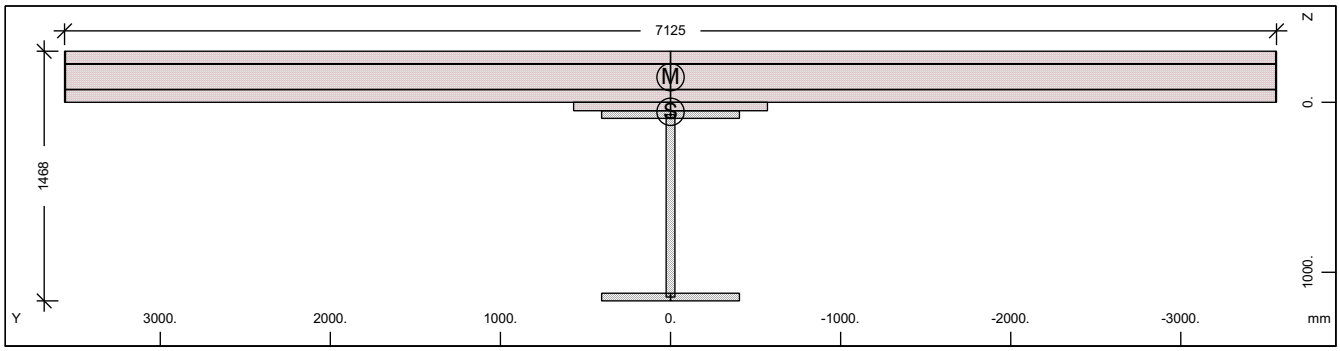

Cross section No. 157 - VFT (151)

Static properties of cross section

Mat NoR	A[cm2] It[cm4]	Ay/Az/Ayz [cm2]	Iy/Iz/Iyz [cm4]	ys/zs [mm]	y/z-sc [mm]	modules [N/mm2]	gam [kN/m]
1	4815.82	3118.65	8035554.0	0.0	0.0	210000	64.97
	6270.0	471.68145603753.		56.1	-147.8	80769	

Additional static properties of cross section

Alfa-T [1/°K]	ymin ymax [mm]	zmin zmax [mm]	hymin hzmin [mm]	AK AB [cm2]	MB	Tau-T Tau-B [1/m3]	Tau-Vy Tau-Vz [1/m2]
1.2E-05	-3562.5	-356.1		1.437E+04		4.747E+00	4.139E+00
	3562.5	1111.9		2.195E+04		1.255E+02	1.689E+01

Section values for warping

Wmin[cm2]	Wmax[cm2]	CM[cm6]	CMS[cm4]	ASwyy[cm6]	ASwzz[cm6]	ry[mm]	rz[mm]
-5237.89	5237.893708299497.		924103.7	5858.15	323.30	0.0	-2510.0

Partial cross sections

Mat NoR	A[cm2] It[cm4]	Ay/Az/Ayz [cm2]	Iy/Iz/Iyz [cm4]	ys/zs [mm]	modules [N/mm2]	gam [kN/m]
1	1286.96	0.12	2633627.3	0.0	210000	10.10
	9949.8	271.17	398580.9	609.0	80769	
30	21915.00	17819.13	170022.2	0.0	32837	54.79
	6408250.4	1141.50901077848.		-145.4	13682	
31	30.00	0.00	0.0	0.0	0	0.08
	9000.6	0.00	3802349.1	-150.0	0	
300	107.24	105.06	6032.1	0.0	200000	0.00
	0.2	7.51	4523914.0	-150.0	76923	

Design values of cross section

Mat NoR	A[cm2] It[cm4]	Ay/Az/Ayz [cm2]	Iy/Iz/Iyz [cm4]	ys/zs [mm]	modules [N/mm2]	gam [kN/m]
1	4016.25	2414.34	7640002.0	0.0	182609	64.97
	6270.0	426.56112727857.		96.2	70234	

Design forces and moments
(C/E = characteristic plastic/elastic, D=plast.Design, F=elast. Design)

	N[kN]	Vy[kN]	Vz[kN]	Mt[kNm]	My[kNm]	Mz[kNm]	y[mm]	z[mm]	BUCK
C	48475.0	53404.68	39592.08	99166.02	35244.07	70438.37	196.7	-98.3	c d
C	-31378.3				38220.88	0.00	0.0	56.1	COMB
C	-32917.5				0.00	72080.77	0.0	0.0	COMB
C	-114310.	53404.68	39592.08	99166.00	-21773.2	-70438.4	-197.	454.6	
C	-34456.7				-24953.5	0.00	0.0	56.1	COMB
C	-32917.5				0.00	-72080.8	0.0	0.0	COMB
E	161330.0	24280.53	11453.52	3556.84	24209.37	78525.45	0.0	56.1	
E	-92396.0	24280.53	11453.52	3556.84	-24209.4	-78525.5	0.0	56.1	
D	42152.2	39092.05	29120.55	66245.72	29597.63	50563.77	93.7	-69.6	

SOFiSTiK AG - www.sofistik.de

Composite bridge 38+50+38, b=14.25m, 2x2HL1100R HISTAR460 , slab 0.30m C30/37

Design forces and moments
(C/E = characteristic plastic/elastic, D=plast.Design, F=elast. Design)

	N[kN]	Vy[kN]	Vz[kN]	Mt[kNm]	My[kNm]	Mz[kNm]	y[mm]	z[mm]	BUCK
D	-13927.7				30543.60	0.00	0.0	56.1	COMB
D	-21945.0				0.00	51041.69	0.0	0.0	COMB
D	-86042.2	39092.05	29120.55	66245.73	-18933.3	-50563.8	-93.7	453.8	
D	-29962.3				-21698.7	0.00	0.0	56.1	COMB
D	-21945.0				0.00	-51041.7	0.0	0.0	COMB
F	140287.0	16187.02	7710.96	2371.23	21051.62	52350.30	0.0	56.1	
F	-61597.3	16187.02	7710.96	2371.23	-21051.6	-52350.3	0.0	56.1	

Additional Design Data

M	periphery-O/-I [m2/m]	[m2/m]	deff [mm]	t-min [mm]	t-max [mm]	SMP [o/o]	thet-p [tm2/m]	thet-y [tm2/m]	thet-z [tm2/m]	thet-yz [tm2/m]
	50.376		19.1	0.8	300.0	0.0	23.350	0.697	22.653	
1	5.386		47.8	45.0	52.0	0.0	0.238	0.207	0.031	
30	16.510		600.0	50.0	300.0	0.0	22.531	0.004	22.527	
31	0.020		300.0	300.0	300.0	0.0	0.095		0.095	
**	28.460		0.8	0.8	0.8	0.0	0.000	0.000	0.000	

Cross section No. 157.1 = CS 1 - steel alone

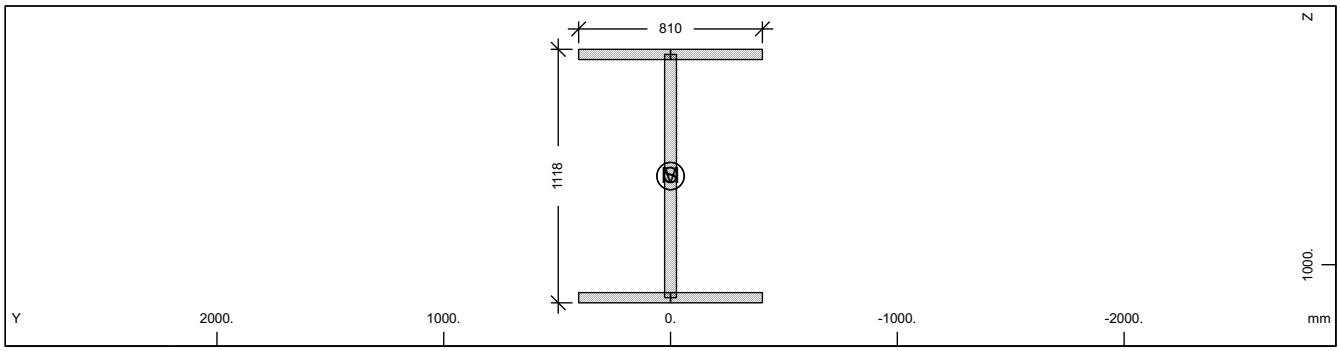

Cross section No. 157

Static properties of cross section

Mat NoR	A[cm2] It[cm4]	Ay/Az/Ayz [cm2]	Iy/Iz/Iyz [cm4]	ys/zs [mm]	modules [N/mm2]	gam [kN/m]
1	1286.96	607.50	2633627.3	0.0	210000	10.10
	6270.0	506.98	398580.9	609.0	80769	

Additional static properties of cross section

Alfa-T [1/°K]	ymin ymax [mm]	zmin zmax [mm]	hymin hzmin [mm]	AK AB [cm2]	MB	Tau-T Tau-B [1/m3]	Tau-Vy Tau-Vz [1/m2]
1.2E-05	-405.0	-559.0		7.359E+02		5.226E+02	2.058E+01
	405.0	559.0				1.255E+02	1.974E+01

Section values for warping

Wmin[cm2]	Wmax[cm2]	CM[cm6]	CMS[cm4]	ASwyy[cm6]	ASwzz[cm6]	ry[mm]	rz[mm]
-2172.83	2172.831147244363.	1748581.4		-0.16	-1.04	0.0	0.0

Design values of cross section

Mat NoR	A[cm2] It[cm4]	Ay/Az/Ayz [cm2]	Iy/Iz/Iyz [cm4]	ys/zs [mm]	modules [N/mm2]	gam [kN/m]
1	1286.96	607.50	2633627.3	0.0	182609	10.10
	6270.0	506.98	398580.9	609.0	70234	

Design forces and moments
(C/E = characteristic plastic/elastic, D=plast.Design, F=elast. Design)

	N[kN]	Vy[kN]	Vz[kN]	Mt[kNm]	My[kNm]	Mz[kNm]	y[mm]	z[mm]	BUCK
C	43113.2	14099.76	10791.64	597.83	18116.18	5188.35	0.0	609.0	c d
C	0.0				0.00	0.00	0.0	0.0	COMB
E	43113.2	9399.84	9796.03	370.08	15782.92	3296.90	0.0	609.0	
D	37489.7	12260.66	9384.03	519.85	15753.20	4511.61	0.0	609.0	

SOFiSTiK AG - www.sofistik.de

Composite bridge 38+50+38, b=14.25m, 2x2HL1100R HISTAR460 , slab 0.30m C30/37

Design forces and moments
(C/E = characteristic plastic/elastic, D=plast.Design, F=elast. Design)

	N[kN]	Vy[kN]	Vz[kN]	Mt[kNm]	My[kNm]	Mz[kNm]	y[mm]	z[mm]	BUCK
D	0.0				0.00	0.00	0.0	0.0	COMB
F	37489.7	8173.78	8518.29	321.81	13724.27	2866.87	0.0	609.0	

Additional Design Data

M	periphery-O/-I [m2/m]	[m2/m]	deff [mm]	t-min [mm]	t-max [mm]	SMP [o/o]	thet-p [tm2/m]	thet-y [tm2/m]	thet-z [tm2/m]	thet-yz [tm2/m]
	5.386		47.8	45.0	52.0	0.0	0.238	0.207	0.031	

Cross section No. 157.2 = CS 10 - prefab. slab C1

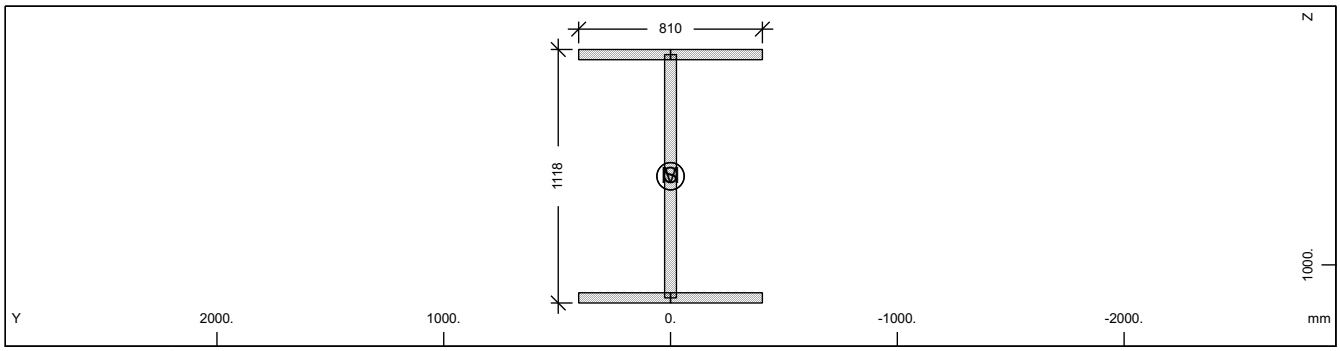

Cross section No. 157

Static properties of cross section

Mat NoR	A[cm2] It[cm4]	Ay/Az/Ayz [cm2]	Iy/Iz/Iyz [cm4]	ys/zs [mm]	modules [N/mm2]	gam [kN/m]
1	1286.96	607.50	2633627.3	0.0	210000	10.10
	6270.0	506.98	398580.9	609.0	80769	

Additional static properties of cross section

Alfa-T [1/°K]	ymin ymax [mm]	zmin zmax [mm]	hymin hzmin [mm]	AK AB [cm2]	MB	Tau-T Tau-B [1/m3]	Tau-Vy Tau-Vz [1/m2]
1.2E-05	-405.0	-559.0		7.359E+02		5.226E+02	2.058E+01
	405.0	559.0				1.255E+02	1.974E+01

Section values for warping

Wmin[cm2]	Wmax[cm2]	CM[cm6]	CMS[cm4]	ASwyy[cm6]	ASwzz[cm6]	ry[mm]	rz[mm]
-2172.83	2172.831147244363.		1748581.4	-0.16	-1.04	0.0	0.0

Design values of cross section

Mat NoR	A[cm2] It[cm4]	Ay/Az/Ayz [cm2]	Iy/Iz/Iyz [cm4]	ys/zs [mm]	modules [N/mm2]	gam [kN/m]
1	1286.96	607.50	2633627.3	0.0	182609	10.10
	6270.0	506.98	398580.9	609.0	70234	

Design forces and moments
(C/E = characteristic plastic/elastic, D=plast.Design, F=elast. Design)

	N[kN]	Vy[kN]	Vz[kN]	Mt[kNm]	My[kNm]	Mz[kNm]	y[mm]	z[mm]	BUCK
C	43113.2	14099.76	10791.64	597.83	18116.18	5188.35	0.0	609.0	c d
C	0.0				0.00	0.00	0.0	0.0	COMB
E	43113.2	9399.84	9796.03	370.08	15782.92	3296.90	0.0	609.0	
D	37489.7	12260.66	9384.03	519.85	15753.20	4511.61	0.0	609.0	
D	0.0				0.00	0.00	0.0	0.0	COMB
F	37489.7	8173.78	8518.29	321.81	13724.27	2866.87	0.0	609.0	

Additional Design Data

M	periphery-O/-I [m2/m]	[m2/m]	deff [mm]	t-min [mm]	t-max [mm]	SMP [o/o]	thet-p [tm2/m]	thet-y [tm2/m]	thet-z [tm2/m]	thet-yz [tm2/m]
	5.386		47.8	45.0	52.0	0.0	0.238	0.207	0.031	

SOFiSTiK AG - www.sofistik.de

Composite bridge 38+50+38, b=14.25m, 2x2HL1100R HISTAR460 , slab 0.30m C30/37

Cross section No. 157.3 = CS 20 - in-situ conc:C2

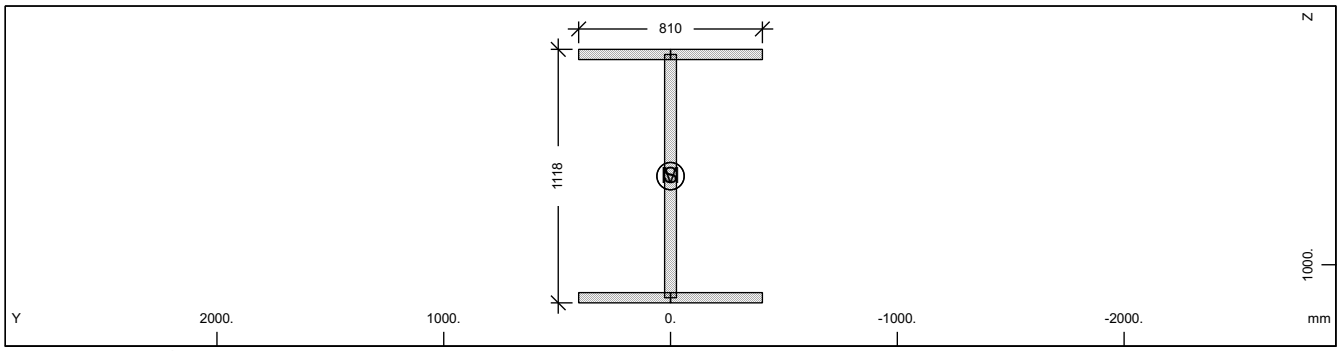

Cross section No. 157

Static properties of cross section

Mat NoR	A[cm2] It[cm4]	Ay/Az/Ayz [cm2]	Iy/Iz/Iyz [cm4]	ys/zs [mm]	modules [N/mm2]	gam [kN/m]
1	1286.96	607.50	2633627.3	0.0	210000	10.10
	6270.0	506.98	398580.9	609.0	80769	

Additional static properties of cross section

Alfa-T [1/°K]	ymin ymax [mm]	zmin zmax [mm]	hymin hzmin [mm]	AK AB [cm2]	MB	Tau-T Tau-B [1/m3]	Tau-Vy Tau-Vz [1/m2]
1.2E-05	-405.0	-559.0		7.359E+02		5.226E+02	2.058E+01
	405.0	559.0				1.255E+02	1.974E+01

Section values for warping

Wmin[cm2]	Wmax[cm2]	CM[cm6]	CMS[cm4]	ASwyy[cm6]	ASwzz[cm6]	ry[mm]	rz[mm]
-2172.83	2172.831	147244363.	1748581.4	-0.16	-1.04	0.0	0.0

Design values of cross section

Mat NoR	A[cm2] It[cm4]	Ay/Az/Ayz [cm2]	Iy/Iz/Iyz [cm4]	ys/zs [mm]	modules [N/mm2]	gam [kN/m]
1	1286.96	607.50	2633627.3	0.0	182609	10.10
	6270.0	506.98	398580.9	609.0	70234	

Design forces and moments
(C/E = characteristic plastic/elastic, D=plast.Design, F=elast. Design)

	N[kN]	Vy[kN]	Vz[kN]	Mt[kNm]	My[kNm]	Mz[kNm]	y[mm]	z[mm]	BUCK
C	43113.2	14099.76	10791.64	597.83	18116.18	5188.35	0.0	609.0	c d
C	0.0				0.00	0.00	0.0	0.0	COMB
E	43113.2	9399.84	9796.03	370.08	15782.92	3296.90	0.0	609.0	
D	37489.7	12260.66	9384.03	519.85	15753.20	4511.61	0.0	609.0	
D	0.0				0.00	0.00	0.0	0.0	COMB
F	37489.7	8173.78	8518.29	321.81	13724.27	2866.87	0.0	609.0	

Additional Design Data

M	periphery-O/-I [m2/m] [m2/m]	deff [mm]	t-min [mm]	t-max [mm]	SMP [o/o]	thet-p [tm2/m]	thet-y [tm2/m]	thet-z [tm2/m]	thet-yz [tm2/m]
	5.386	47.8	45.0	52.0	0.0	0.238	0.207	0.031	

SOFiSTiK AG - www.sofistik.de

Composite bridge 38+50+38, b=14.25m, 2x2HL1100R HISTAR460 , slab 0.30m C30/37

Cross section No. 157.4 = CS 21 - reinf active:C2

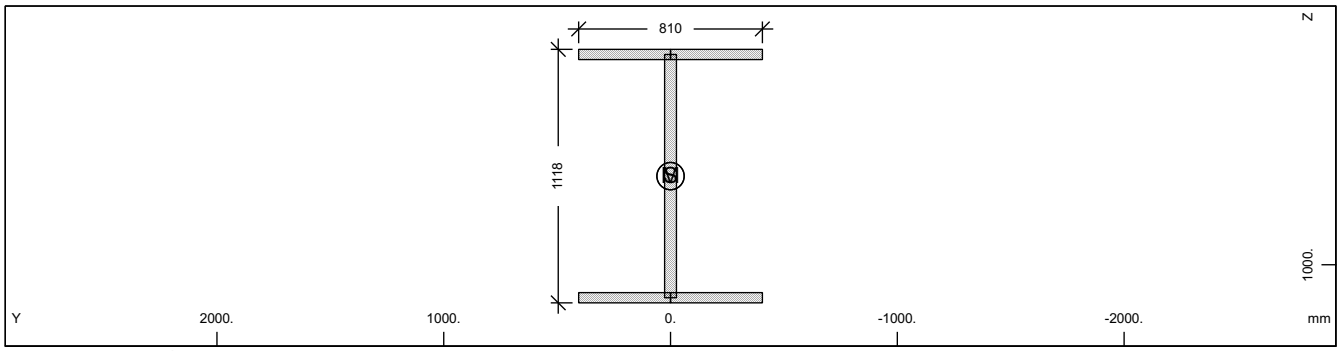

Cross section No. 157

Static properties of cross section

Mat NoR	A[cm2] It[cm4]	Ay/Az/Ayz [cm2]	Iy/Iz/Iyz [cm4]	ys/zs [mm]	modules [N/mm2]	gam [kN/m]
1	1286.96	607.50	2633627.3	0.0	210000	10.10
	6270.0	506.98	398580.9	609.0	80769	

Additional static properties of cross section

Alfa-T [1/°K]	ymin ymax [mm]	zmin zmax [mm]	hymin hzmin [mm]	AK AB [cm2]	MB	Tau-T Tau-B [1/m3]	Tau-Vy Tau-Vz [1/m2]
1.2E-05	-405.0	-559.0		7.359E+02		5.226E+02	2.058E+01
	405.0	559.0				1.255E+02	1.974E+01

Section values for warping

Wmin[cm2]	Wmax[cm2]	CM[cm6]	CMS[cm4]	ASwyy[cm6]	ASwzz[cm6]	ry[mm]	rz[mm]
-2172.83	2172.831	147244363.	1748581.4	-0.16	-1.04	0.0	0.0

Design values of cross section

Mat NoR	A[cm2] It[cm4]	Ay/Az/Ayz [cm2]	Iy/Iz/Iyz [cm4]	ys/zs [mm]	modules [N/mm2]	gam [kN/m]
1	1286.96	607.50	2633627.3	0.0	182609	10.10
	6270.0	506.98	398580.9	609.0	70234	

Design forces and moments
(C/E = characteristic plastic/elastic, D=plast.Design, F=elast. Design)

	N[kN]	Vy[kN]	Vz[kN]	Mt[kNm]	My[kNm]	Mz[kNm]	y[mm]	z[mm]	BUCK
C	43113.2	14099.76	10791.64	597.83	18116.18	5188.35	0.0	609.0	c d
C	0.0				0.00	0.00	0.0	0.0	COMB
E	43113.2	9399.84	9796.03	370.08	15782.92	3296.90	0.0	609.0	
D	37489.7	12260.66	9384.03	519.85	15753.20	4511.61	0.0	609.0	
D	0.0				0.00	0.00	0.0	0.0	COMB
F	37489.7	8173.78	8518.29	321.81	13724.27	2866.87	0.0	609.0	

Additional Design Data

M	periphery-O/-I [m2/m] [m2/m]	deff [mm]	t-min [mm]	t-max [mm]	SMP [o/o]	thet-p [tm2/m]	thet-y [tm2/m]	thet-z [tm2/m]	thet-yz [tm2/m]
	5.386	47.8	45.0	52.0	0.0	0.238	0.207	0.031	

SOFiSTiK AG - www.sofistik.de

Composite bridge 38+50+38, b=14.25m, 2x2HL1100R HISTAR460 , slab 0.30m C30/37

Cross section No. 157.5 = CS 30 - in-situ conc:C3

Cross section No. 158 - VFT (151)

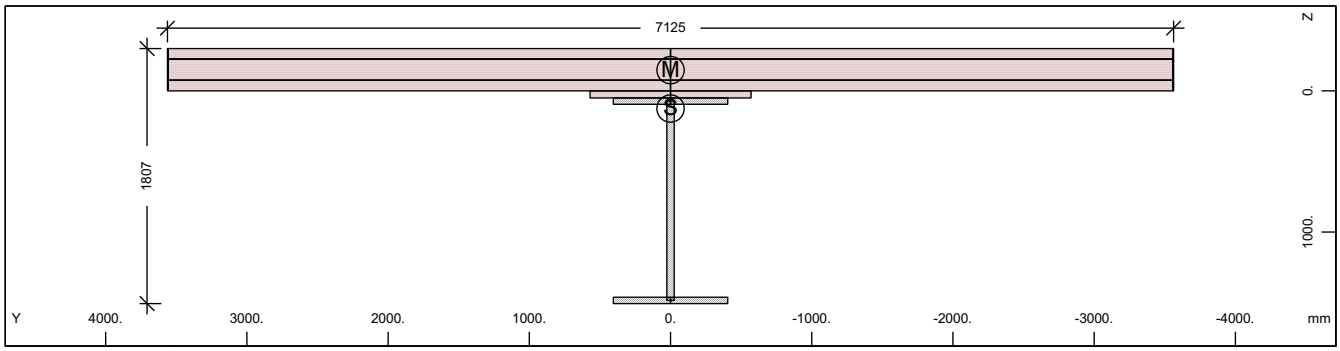

Cross section No. 158 - VFT (151)

Static properties of cross section

Mat NoR	A[cm2] It[cm4]	Ay/Az/Ayz [cm2]	Iy/Iz/Iyz [cm4]	ys/zs [mm]	y/z-sc [mm]	modules [N/mm2]	gam [kN/m]
1	4991.97	3118.65	13713434.	0.0	0.0	210000	66.35
	6270.0	635.07	145603753.	125.2	-147.3	80769	

Additional static properties of cross section

Alfa-T [1/°K]	ymin ymax [mm]	zmin zmax [mm]	hymin hzmin [mm]	AK AB [cm2]	MB	Tau-T Tau-B [1/m3]	Tau-Vy Tau-Vz [1/m2]
1.2E-05	-3562.5	-425.2		1.439E+04		4.740E+00	4.139E+00
	3562.5	1381.5		2.195E+04		1.255E+02	1.368E+01

Section values for warping

Wmin[cm2]	Wmax[cm2]	CM[cm6]	CMS[cm4]	ASwyy[cm6]	ASwzz[cm6]	ry[mm]	rz[mm]
-6607.93	6607.935682858196.		1977994.7	1268.77	119.50	0.0	-1411.1

Partial cross sections

Mat NoR	A[cm2] It[cm4]	Ay/Az/Ayz [cm2]	Iy/Iz/Iyz [cm4]	ys/zs [mm]	modules [N/mm2]	gam [kN/m]
1	1463.11	0.12	4851534.6	0.0	210000	11.49
	11537.5	412.84	398580.9	778.4	80769	
30	21915.00	17819.13	170022.2	0.0	32837	54.79
	6408250.4	1267.46901077848.		-145.4	13682	
31	30.00	0.00	0.0	0.0	0	0.08
	9000.6	0.00	3802349.1	-150.0	0	
300	107.24	105.06	6032.1	0.0	200000	0.00
	0.2	7.91	4523914.0	-150.0	76923	

Design values of cross section

Mat NoR	A[cm2] It[cm4]	Ay/Az/Ayz [cm2]	Iy/Iz/Iyz [cm4]	ys/zs [mm]	modules [N/mm2]	gam [kN/m]
1	4192.40	2414.34	13009720.	0.0	182609	66.35
	6270.0	584.98112727857.		176.8	70234	

Design forces and moments
(C/E = characteristic plastic/elastic, D=plast.Design, F=elast. Design)

	N[kN]	Vy[kN]	Vz[kN]	Mt[kNm]	My[kNm]	Mz[kNm]	y[mm]	z[mm]	BUCK
C	54376.0	53404.68	42999.00	99254.61	47640.29	71358.55	115.1	-75.2	c d
C	-48441.1				52645.34	0.00	0.0	125.2	COMB
C	-32917.5				0.00	72157.49	0.0	0.0	COMB
C	-120211.	53404.68	42999.00	99254.61	-30483.3	-71358.6	-115.	624.3	
C	-17393.9				-34825.2	0.00	0.0	125.2	COMB
C	-32917.5				0.00	-72157.5	0.0	0.0	COMB
E	167231.0	24280.53	14137.61	3562.00	33253.18	78525.45	0.0	125.2	
E	-95775.6	24280.53	14137.61	3562.00	-33253.2	-78525.5	0.0	125.2	
D	47283.5	39092.05	32083.08	66322.75	40206.31	50835.77	24.8	-33.6	

SOFiSTiK AG - www.sofistik.de

Composite bridge 38+50+38, b=14.25m, 2x2HL1100R HISTAR460 , slab 0.30m C30/37

Design forces and moments
(C/E = characteristic plastic/elastic, D=plast.Design, F=elast. Design)

	N[kN]	Vy[kN]	Vz[kN]	Mt[kNm]	My[kNm]	Mz[kNm]	y[mm]	z[mm]	BUCK
D	-28764.9				42162.88	0.00	0.0	125.2	COMB
D	-21945.0				0.00	51108.39	0.0	0.0	COMB
D	-91173.5	39092.05	32083.08	66322.75	-26507.2	-50835.8	-24.8	623.9	
D	-15125.1				-30282.8	0.00	0.0	125.2	COMB
D	-21945.0				0.00	-51108.4	0.0	0.0	COMB
F	145418.2	16187.02	9853.04	2374.67	28915.81	52350.30	0.0	125.2	
F	-63850.4	16187.02	9853.04	2374.67	-28915.8	-52350.3	0.0	125.2	

Additional Design Data

M	periphery-O/-I [m2/m]	[m2/m]	deff [mm]	t-min [mm]	t-max [mm]	SMP [o/o]	thet-p [tm2/m]	thet-y [tm2/m]	thet-z [tm2/m]	thet-yz [tm2/m]
	51.053		19.6	0.8	300.0	0.0	23.849	1.196	22.653	
1	6.063		48.3	45.0	52.0	0.0	0.412	0.381	0.031	
30	16.510		600.0	50.0	300.0	0.0	22.531	0.004	22.527	
31	0.020		300.0	300.0	300.0	0.0	0.095		0.095	
**	28.460		0.8	0.8	0.8	0.0	0.000	0.000	0.000	

Cross section No. 158.1 = CS 1 - steel alone

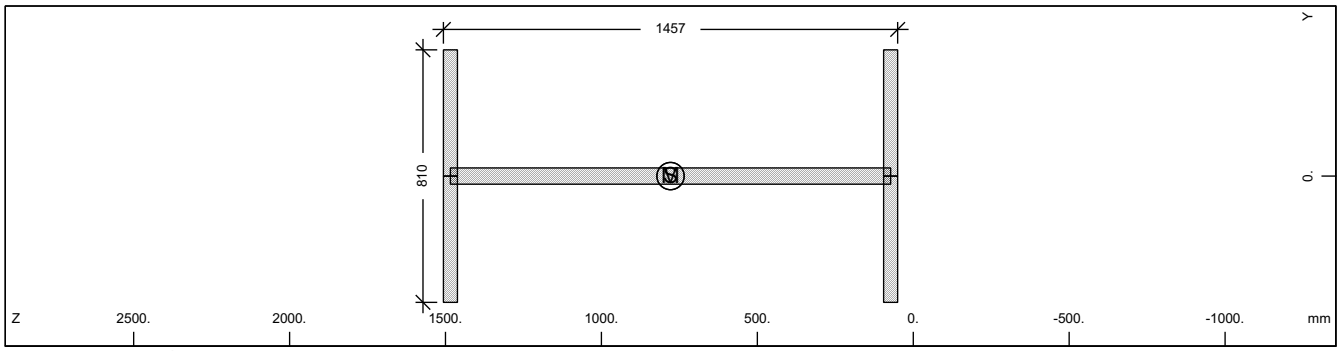

Cross section No. 158

Static properties of cross section

Mat NoR	A[cm2] It[cm4]	Ay/Az/Ayz [cm2]	Iy/Iz/Iyz [cm4]	ys/zs [mm]	modules [N/mm2]	gam [kN/m]
1	1463.11	607.50	4851534.6	0.0	210000	11.49
	6270.0	683.16	398580.9	778.4	80769	

Additional static properties of cross section

Alfa-T [1/°K]	ymin ymax [mm]	zmin zmax [mm]	hymin hzmin [mm]	AK AB [cm2]	MB	Tau-T Tau-B [1/m3]	Tau-Vy Tau-Vz [1/m2]
1.2E-05	-405.0	-728.4		8.534E+02		4.507E+02	2.058E+01
	405.0	728.4				1.255E+02	1.533E+01

Section values for warping

Wmin[cm2]	Wmax[cm2]	CM[cm6]	CMS[cm4]	ASwyy[cm6]	ASwzz[cm6]	ry[mm]	rz[mm]
-2858.78	2858.781985954362.	3026907.4		-1.15	-14.05	0.0	0.0

Design values of cross section

Mat NoR	A[cm2] It[cm4]	Ay/Az/Ayz [cm2]	Iy/Iz/Iyz [cm4]	ys/zs [mm]	modules [N/mm2]	gam [kN/m]
1	1463.11	607.50	4851534.6	0.0	182609	11.49
	6270.0	683.16	398580.9	778.4	70234	

Design forces and moments
(C/E = characteristic plastic/elastic, D=plast.Design, F=elast. Design)

	N[kN]	Vy[kN]	Vz[kN]	Mt[kNm]	My[kNm]	Mz[kNm]	y[mm]	z[mm]	BUCK
C	49014.1	14099.76	14198.55	686.41	25918.10	5265.06	0.0	778.4	c d
C	0.0				0.00	0.00	0.0	0.0	COMB
E	49014.1	9399.84	12613.58	429.13	22313.63	3296.90	0.0	778.4	
D	42621.0	12260.66	12346.56	596.88	22537.48	4578.31	0.0	778.4	

SOFiSTiK AG - www.sofistik.de

Composite bridge 38+50+38, b=14.25m, 2x2HL1100R HISTAR460 , slab 0.30m C30/37

Design forces and moments
(C/E = characteristic plastic/elastic, D=plast.Design, F=elast. Design)

	N[kN]	Vy[kN]	Vz[kN]	Mt[kNm]	My[kNm]	Mz[kNm]	y[mm]	z[mm]	BUCK
D	0.0				0.00	0.00	0.0	0.0	COMB
F	42621.0	8173.78	10968.33	373.16	19403.15	2866.87	0.0	778.4	

Additional Design Data

M	periphery-O/-I [m2/m]	[m2/m]	deff [mm]	t-min [mm]	t-max [mm]	SMP [o/o]	thet-p [tm2/m]	thet-y [tm2/m]	thet-z [tm2/m]	thet-yz [tm2/m]
	6.063		48.3	45.0	52.0	0.0	0.412	0.381	0.031	

Cross section No. 158.2 = CS 10 - prefab. slab C1

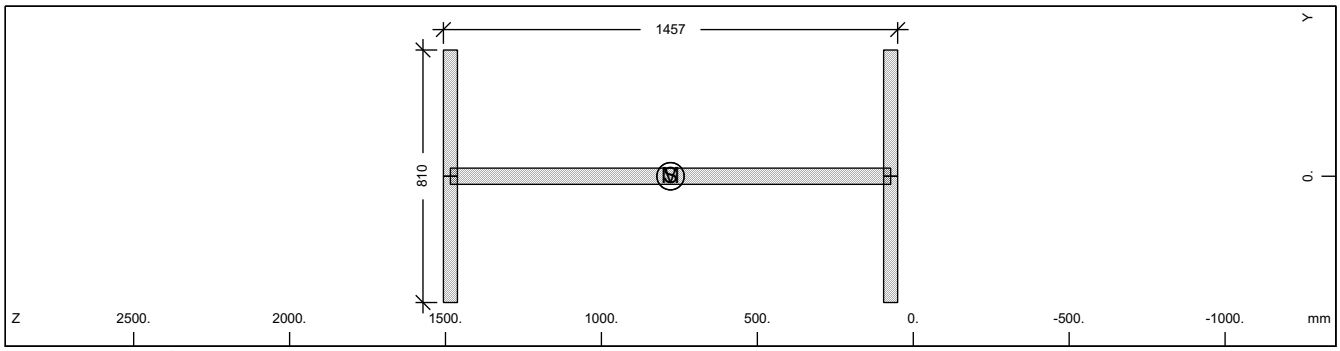

Cross section No. 158

Static properties of cross section

Mat NoR	A[cm2] It[cm4]	Ay/Az/Ayz [cm2]	Iy/Iz/Iyz [cm4]	ys/zs [mm]	modules [N/mm2]	gam [kN/m]
1	1463.11	607.50	4851534.6	0.0	210000	11.49
	6270.0	683.16	398580.9	778.4	80769	

Additional static properties of cross section

Alfa-T [1/°K]	ymin ymax [mm]	zmin zmax [mm]	hymin hzmin [mm]	AK AB [cm2]	MB	Tau-T Tau-B [1/m3]	Tau-Vy Tau-Vz [1/m2]
1.2E-05	-405.0	-728.4		8.534E+02		4.507E+02	2.058E+01
	405.0	728.4				1.255E+02	1.533E+01

Section values for warping

Wmin[cm2]	Wmax[cm2]	CM[cm6]	CMS[cm4]	ASwyy[cm6]	ASwzz[cm6]	ry[mm]	rz[mm]
-2858.78	2858.781985954362.		3026907.4	-1.15	-14.05	0.0	0.0

Design values of cross section

Mat NoR	A[cm2] It[cm4]	Ay/Az/Ayz [cm2]	Iy/Iz/Iyz [cm4]	ys/zs [mm]	modules [N/mm2]	gam [kN/m]
1	1463.11	607.50	4851534.6	0.0	182609	11.49
	6270.0	683.16	398580.9	778.4	70234	

Design forces and moments
(C/E = characteristic plastic/elastic, D=plast.Design, F=elast. Design)

	N[kN]	Vy[kN]	Vz[kN]	Mt[kNm]	My[kNm]	Mz[kNm]	y[mm]	z[mm]	BUCK
C	49014.1	14099.76	14198.55	686.41	25918.10	5265.06	0.0	778.4	c d
C	0.0				0.00	0.00	0.0	0.0	COMB
E	49014.1	9399.84	12613.58	429.13	22313.63	3296.90	0.0	778.4	
D	42621.0	12260.66	12346.56	596.88	22537.48	4578.31	0.0	778.4	
D	0.0				0.00	0.00	0.0	0.0	COMB
F	42621.0	8173.78	10968.33	373.16	19403.15	2866.87	0.0	778.4	

Additional Design Data

M	periphery-O/-I [m2/m]	[m2/m]	deff [mm]	t-min [mm]	t-max [mm]	SMP [o/o]	thet-p [tm2/m]	thet-y [tm2/m]	thet-z [tm2/m]	thet-yz [tm2/m]
	6.063		48.3	45.0	52.0	0.0	0.412	0.381	0.031	

SOFiSTiK AG - www.sofistik.de

Composite bridge 38+50+38, b=14.25m, 2x2HL1100R HISTAR460 , slab 0.30m C30/37

Cross section No. 158.3 = CS 20 - in-situ conc:C2

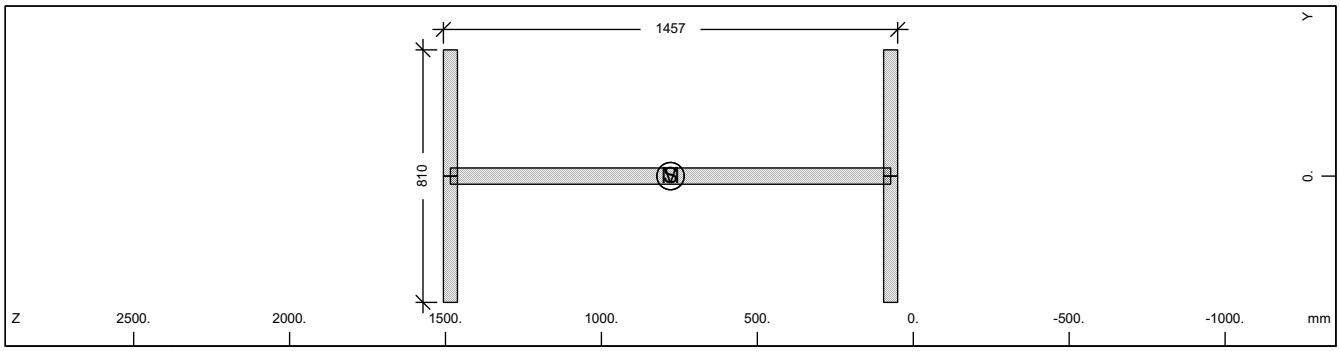

Cross section No. 158

Static properties of cross section

Mat NoR	A[cm2] It[cm4]	Ay/Az/Ayz [cm2]	Iy/Iz/Iyz [cm4]	ys/zs [mm]	modules [N/mm2]	gam [kN/m]
1	1463.11	607.50	4851534.6	0.0	210000	11.49
	6270.0	683.16	398580.9	778.4	80769	

Additional static properties of cross section

Alfa-T [1/°K]	ymin ymax [mm]	zmin zmax [mm]	hymin hzmin [mm]	AK AB [cm2]	MB	Tau-T Tau-B [1/m3]	Tau-Vy Tau-Vz [1/m2]
1.2E-05	-405.0	-728.4		8.534E+02		4.507E+02	2.058E+01
	405.0	728.4				1.255E+02	1.533E+01

Section values for warping

Wmin[cm2]	Wmax[cm2]	CM[cm6]	CMS[cm4]	ASwyy[cm6]	ASwzz[cm6]	ry[mm]	rz[mm]
-2858.78	2858.781	985954362.	3026907.4	-1.15	-14.05	0.0	0.0

Design values of cross section

Mat NoR	A[cm2] It[cm4]	Ay/Az/Ayz [cm2]	Iy/Iz/Iyz [cm4]	ys/zs [mm]	modules [N/mm2]	gam [kN/m]
1	1463.11	607.50	4851534.6	0.0	182609	11.49
	6270.0	683.16	398580.9	778.4	70234	

Design forces and moments
(C/E = characteristic plastic/elastic, D=plast.Design, F=elast. Design)

	N[kN]	Vy[kN]	Vz[kN]	Mt[kNm]	My[kNm]	Mz[kNm]	y[mm]	z[mm]	BUCK
C	49014.1	14099.76	14198.55	686.41	25918.10	5265.06	0.0	778.4	c d
C	0.0				0.00	0.00	0.0	0.0	COMB
E	49014.1	9399.84	12613.58	429.13	22313.63	3296.90	0.0	778.4	
D	42621.0	12260.66	12346.56	596.88	22537.48	4578.31	0.0	778.4	
D	0.0				0.00	0.00	0.0	0.0	COMB
F	42621.0	8173.78	10968.33	373.16	19403.15	2866.87	0.0	778.4	

Additional Design Data

M	periphery-O/-I [m2/m] [m2/m]	deff [mm]	t-min [mm]	t-max [mm]	SMP [o/o]	thet-p [tm2/m]	thet-y [tm2/m]	thet-z [tm2/m]	thet-yz [tm2/m]
	6.063	48.3	45.0	52.0	0.0	0.412	0.381	0.031	

SOFiSTiK AG - www.sofistik.de

Composite bridge 38+50+38, b=14.25m, 2x2HL1100R HISTAR460 , slab 0.30m C30/37

Cross section No. 158.4 = CS 21 - reinf active:C2

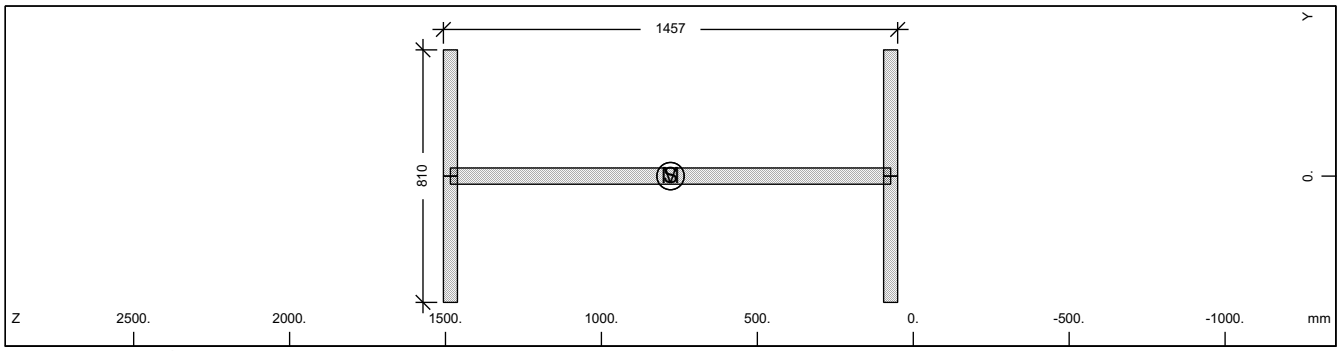

Cross section No. 158

Static properties of cross section

Mat NoR	A[cm2] It[cm4]	Ay/Az/Ayz [cm2]	Iy/Iz/Iyz [cm4]	ys/zs [mm]	modules [N/mm2]	gam [kN/m]
1	1463.11	607.50	4851534.6	0.0	210000	11.49
	6270.0	683.16	398580.9	778.4	80769	

Additional static properties of cross section

Alfa-T [1/°K]	ymin ymax [mm]	zmin zmax [mm]	hymin hzmin [mm]	AK AB [cm2]	MB	Tau-T Tau-B [1/m3]	Tau-Vy Tau-Vz [1/m2]
1.2E-05	-405.0	-728.4		8.534E+02		4.507E+02	2.058E+01
	405.0	728.4				1.255E+02	1.533E+01

Section values for warping

Wmin[cm2]	Wmax[cm2]	CM[cm6]	CMS[cm4]	ASwyy[cm6]	ASwzz[cm6]	ry[mm]	rz[mm]
-2858.78	2858.781	985954362.	3026907.4	-1.15	-14.05	0.0	0.0

Design values of cross section

Mat NoR	A[cm2] It[cm4]	Ay/Az/Ayz [cm2]	Iy/Iz/Iyz [cm4]	ys/zs [mm]	modules [N/mm2]	gam [kN/m]
1	1463.11	607.50	4851534.6	0.0	182609	11.49
	6270.0	683.16	398580.9	778.4	70234	

Design forces and moments
(C/E = characteristic plastic/elastic, D=plast.Design, F=elast. Design)

	N[kN]	Vy[kN]	Vz[kN]	Mt[kNm]	My[kNm]	Mz[kNm]	y[mm]	z[mm]	BUCK
C	49014.1	14099.76	14198.55	686.41	25918.10	5265.06	0.0	778.4	c d
C	0.0				0.00	0.00	0.0	0.0	COMB
E	49014.1	9399.84	12613.58	429.13	22313.63	3296.90	0.0	778.4	
D	42621.0	12260.66	12346.56	596.88	22537.48	4578.31	0.0	778.4	
D	0.0				0.00	0.00	0.0	0.0	COMB
F	42621.0	8173.78	10968.33	373.16	19403.15	2866.87	0.0	778.4	

Additional Design Data

M	periphery-O/-I [m2/m] [m2/m]	deff [mm]	t-min [mm]	t-max [mm]	SMP [o/o]	thet-p [tm2/m]	thet-y [tm2/m]	thet-z [tm2/m]	thet-yz [tm2/m]
	6.063	48.3	45.0	52.0	0.0	0.412	0.381	0.031	

SOFiSTiK AG - www.sofistik.de

Composite bridge 38+50+38, b=14.25m, 2x2HL1100R HISTAR460 , slab 0.30m C30/37

Cross section No. 158.5 = CS 30 - in-situ conc:C3

Cross section No. 159 - VFT (151)

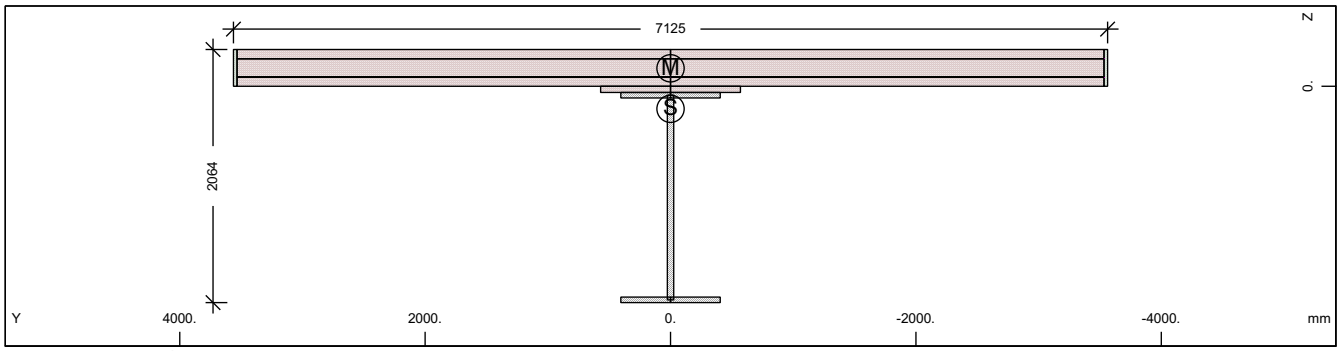

Cross section No. 159 - VFT (151)

Static properties of cross section

Mat NoR	A[cm2] It[cm4]	Ay/Az/Ayz [cm2]	Iy/Iz/Iyz [cm4]	ys/zs [mm]	y/z-sc [mm]	modules [N/mm2]	gam [kN/m]
1	5101.96	3097.68	19270058.	0.0	0.0	210000	67.40
	6270.0	761.33	142636288.	183.8	-146.9	80769	

Additional static properties of cross section

Alfa-T [1/°K]	ymin ymax [mm]	zmin zmax [mm]	hymin hzmin [mm]	AK AB [cm2]	MB	Tau-T Tau-B [1/m3]	Tau-Vy Tau-Vz [1/m2]
1.2E-05	-3562.5	-483.8		1.431E+04		4.767E+00	4.167E+00
	3562.5	1579.9		2.195E+04		1.255E+02	1.196E+01

Section values for warping

Wmin[cm2]	Wmax[cm2]	CM[cm6]	CMS[cm4]	ASwyy[cm6]	ASwzz[cm6]	ry[mm]	rz[mm]
-7646.83	7646.83	7479889348.	3246883.7	5556.83	750.72	0.0	-742.0

Partial cross sections

Mat NoR	A[cm2] It[cm4]	Ay/Az/Ayz [cm2]	Iy/Iz/Iyz [cm4]	ys/zs [mm]	modules [N/mm2]	gam [kN/m]
1	1596.71	0.12	7088169.5	0.0	210000	12.53
	12741.7	528.40	398580.9	906.8	80769	
30	21768.50	17699.28	169991.7	0.0	32837	54.42
	6364299.4	1329.49	882663541.	-145.4	13682	
31	176.51	0.03	0.0	0.0	0	0.44
	52952.0	0.00	22216693.	-150.0	0	
300	106.50	104.36	5990.7	0.0	200000	0.00
	0.2	8.11	4431400.1	-150.0	76923	

Design values of cross section

Mat NoR	A[cm2] It[cm4]	Ay/Az/Ayz [cm2]	Iy/Iz/Iyz [cm4]	ys/zs [mm]	modules [N/mm2]	gam [kN/m]
1	4307.74	2398.11	18244293.	0.0	182609	67.40
	6270.0	708.79	110432244.	244.5	70234	

Design forces and moments
(C/E = characteristic plastic/elastic, D=plast.Design, F=elast. Design)

	N[kN]	Vy[kN]	Vz[kN]	Mt[kNm]	My[kNm]	Mz[kNm]	y[mm]	z[mm]	BUCK
C	58814.9	53383.44	45583.08	99321.78	58328.36	71604.87	53.2	-74.6	c d
C	-45969.6				65063.41	0.00	0.0	183.8	COMB
C	-32917.5				0.00	72085.20	0.0	0.0	COMB
C	-124650.	53383.44	45583.08	99321.79	-37723.0	-71604.9	-53.2	753.9	
C	-19865.4				-43386.6	0.00	0.0	183.8	COMB
C	-32917.5				0.00	-72085.2	0.0	0.0	COMB
E	170915.8	24115.59	16173.97	3541.74	40860.71	77456.71	0.0	183.8	
E	-97885.9	24115.59	16173.97	3541.74	-40860.7	-77456.7	0.0	183.8	
D	51143.4	39073.58	34330.11	66381.16	49284.17	50812.42	21.2	-6.1	

SOFiSTiK AG - www.sofistik.de

Composite bridge 38+50+38, b=14.25m, 2x2HL1100R HISTAR460 , slab 0.30m C30/37

Design forces and moments
(C/E = characteristic plastic/elastic, D=plast.Design, F=elast. Design)

	N[kN]	Vy[kN]	Vz[kN]	Mt[kNm]	My[kNm]	Mz[kNm]	y[mm]	z[mm]	BUCK
D	-26615.7				52178.68	0.00	0.0	183.8	COMB
D	-21945.0				0.00	51045.54	0.0	0.0	COMB
D	-95033.4	39073.58	34330.11	66381.17	-32802.6	-50812.4	-21.2	753.7	
D	-17274.3				-37727.4	0.00	0.0	183.8	COMB
D	-21945.0				0.00	-51045.5	0.0	0.0	COMB
F	148622.5	16077.06	11494.49	2361.16	35531.05	51637.81	0.0	183.8	
F	-65257.3	16077.06	11494.49	2361.16	-35531.1	-51637.8	0.0	183.8	

Additional Design Data

M	periphery-O/-I [m2/m]	[m2/m]	deff [mm]	t-min [mm]	t-max [mm]	SMP [o/o]	thet-p [tm2/m]	thet-y [tm2/m]	thet-z [tm2/m]	thet-yz [tm2/m]
	51.372		19.9	0.8	300.0	0.0	24.344	1.690	22.653	
1	6.577		48.6	45.0	52.0	0.0	0.588	0.556	0.031	
30	16.412		600.0	50.0	300.0	0.0	22.071	0.004	22.067	
31	0.118		300.0	300.0	300.0	0.0	0.555		0.555	
**	28.265		0.8	0.8	0.8	0.0	0.000	0.000	0.000	

Cross section No. 159.1 = CS 1 - steel alone

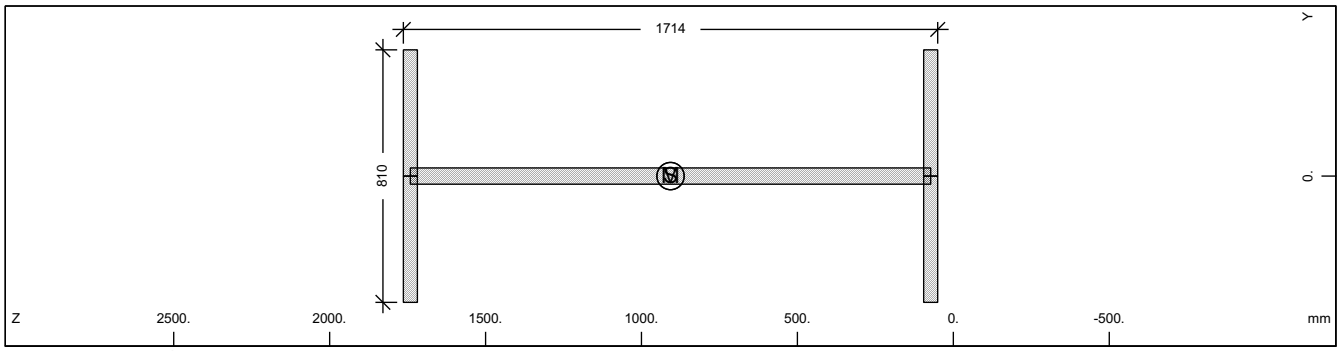

Cross section No. 159

Static properties of cross section

Mat NoR	A[cm2] It[cm4]	Ay/Az/Ayz [cm2]	Iy/Iz/Iyz [cm4]	ys/zs [mm]	modules [N/mm2]	gam [kN/m]
1	1596.71	607.50	7088169.5	0.0	210000	12.53
	6270.0	815.48	398580.9	906.8	80769	

Additional static properties of cross section

Alfa-T [1/°K]	ymin ymax [mm]	zmin zmax [mm]	hymin hzmin [mm]	AK AB [cm2]	MB	Tau-T Tau-B [1/m3]	Tau-Vy Tau-Vz [1/m2]
1.2E-05	-405.0	-856.8		9.424E+02		4.081E+02	2.058E+01
	405.0	856.8				1.255E+02	1.316E+01

Section values for warping

Wmin[cm2]	Wmax[cm2]	CM[cm6]	CMS[cm4]	ASwyy[cm6]	ASwzz[cm6]	ry[mm]	rz[mm]
-3379.07	3379.072774606703.		4228938.0	-0.65	-11.63	0.0	0.0

Design values of cross section

Mat NoR	A[cm2] It[cm4]	Ay/Az/Ayz [cm2]	Iy/Iz/Iyz [cm4]	ys/zs [mm]	modules [N/mm2]	gam [kN/m]
1	1596.71	607.50	7088169.5	0.0	182609	12.53
	6270.0	815.48	398580.9	906.8	70234	

Design forces and moments
(C/E = characteristic plastic/elastic, D=plast.Design, F=elast. Design)

	N[kN]	Vy[kN]	Vz[kN]	Mt[kNm]	My[kNm]	Mz[kNm]	y[mm]	z[mm]	BUCK
C	53489.9	14099.76	16782.63	753.59	32502.25	5323.24	0.0	906.8	c d
C	0.0				0.00	0.00	0.0	0.0	COMB
E	53489.9	9399.84	14695.46	473.92	27712.76	3296.90	0.0	906.8	
D	46512.9	12260.66	14593.59	655.30	28262.82	4628.91	0.0	906.8	

SOFiSTiK AG - www.sofistik.de

Composite bridge 38+50+38, b=14.25m, 2x2HL1100R HISTAR460 , slab 0.30m C30/37

Design forces and moments
(C/E = characteristic plastic/elastic, D=plast.Design, F=elast. Design)

	N[kN]	Vy[kN]	Vz[kN]	Mt[kNm]	My[kNm]	Mz[kNm]	y[mm]	z[mm]	BUCK
D	0.0				0.00	0.00	0.0	0.0	COMB
F	46512.9	8173.78	12778.66	412.11	24098.05	2866.87	0.0	906.8	

Additional Design Data

M	periphery-O/-I [m2/m]	[m2/m]	deff [mm]	t-min [mm]	t-max [mm]	SMP [o/o]	thet-p [tm2/m]	thet-y [tm2/m]	thet-z [tm2/m]	thet-yz [tm2/m]
	6.577		48.6	45.0	52.0	0.0	0.588	0.556	0.031	

Cross section No. 159.2 = CS 10 - prefab. slab C1

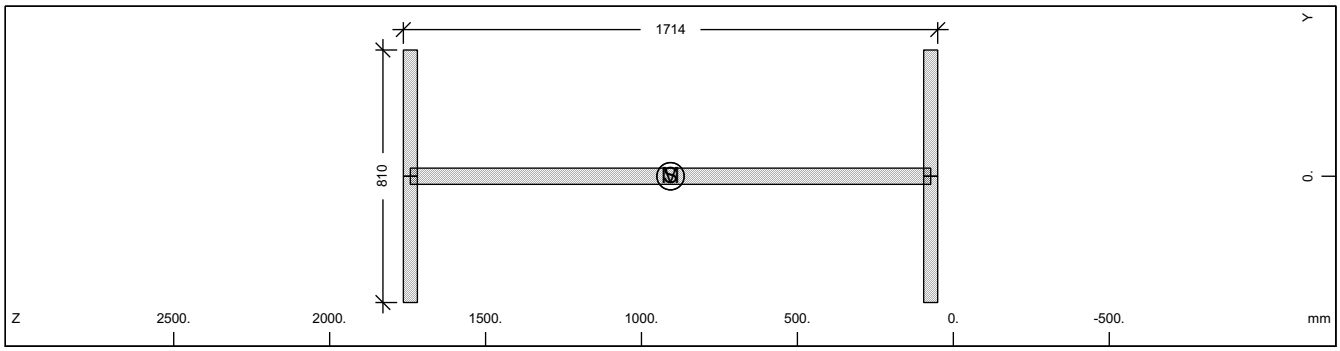

Cross section No. 159

Static properties of cross section

Mat NoR	A[cm2] It[cm4]	Ay/Az/Ayz [cm2]	Iy/Iz/Iyz [cm4]	ys/zs [mm]	modules [N/mm2]	gam [kN/m]
1	1596.71	607.50	7088169.5	0.0	210000	12.53
	6270.0	815.48	398580.9	906.8	80769	

Additional static properties of cross section

Alfa-T [1/°K]	ymin ymax [mm]	zmin zmax [mm]	hymin hzmin [mm]	AK AB [cm2]	MB	Tau-T Tau-B [1/m3]	Tau-Vy Tau-Vz [1/m2]
1.2E-05	-405.0	-856.8		9.424E+02		4.081E+02	2.058E+01
	405.0	856.8				1.255E+02	1.316E+01

Section values for warping

Wmin[cm2]	Wmax[cm2]	CM[cm6]	CMS[cm4]	ASwyy[cm6]	ASwzz[cm6]	ry[mm]	rz[mm]
-3379.07	3379.072774606703.		4228938.0	-0.65	-11.63	0.0	0.0

Design values of cross section

Mat NoR	A[cm2] It[cm4]	Ay/Az/Ayz [cm2]	Iy/Iz/Iyz [cm4]	ys/zs [mm]	modules [N/mm2]	gam [kN/m]
1	1596.71	607.50	7088169.5	0.0	182609	12.53
	6270.0	815.48	398580.9	906.8	70234	

Design forces and moments
(C/E = characteristic plastic/elastic, D=plast.Design, F=elast. Design)

	N[kN]	Vy[kN]	Vz[kN]	Mt[kNm]	My[kNm]	Mz[kNm]	y[mm]	z[mm]	BUCK
C	53489.9	14099.76	16782.63	753.59	32502.25	5323.24	0.0	906.8	c d
C	0.0				0.00	0.00	0.0	0.0	COMB
E	53489.9	9399.84	14695.46	473.92	27712.76	3296.90	0.0	906.8	
D	46512.9	12260.66	14593.59	655.30	28262.82	4628.91	0.0	906.8	
D	0.0				0.00	0.00	0.0	0.0	COMB
F	46512.9	8173.78	12778.66	412.11	24098.05	2866.87	0.0	906.8	

Additional Design Data

M	periphery-O/-I [m2/m]	[m2/m]	deff [mm]	t-min [mm]	t-max [mm]	SMP [o/o]	thet-p [tm2/m]	thet-y [tm2/m]	thet-z [tm2/m]	thet-yz [tm2/m]
	6.577		48.6	45.0	52.0	0.0	0.588	0.556	0.031	

SOFiSTiK AG - www.sofistik.de

Composite bridge 38+50+38, b=14.25m, 2x2HL1100R HISTAR460 , slab 0.30m C30/37

Cross section No. 159.3 = CS 20 - in-situ conc:C2

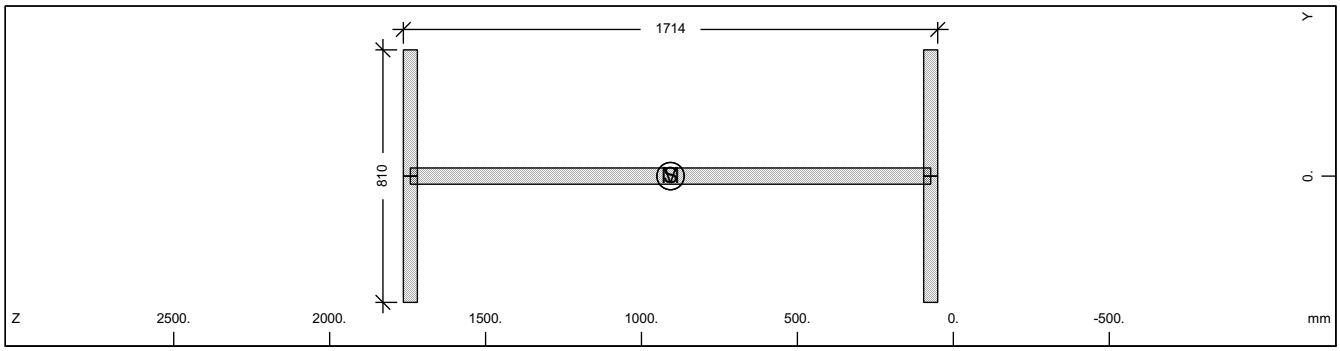

Cross section No. 159

Static properties of cross section

Mat NoR	A[cm2] It[cm4]	Ay/Az/Ayz [cm2]	Iy/Iz/Iyz [cm4]	ys/zs [mm]	modules [N/mm2]	gam [kN/m]
1	1596.71	607.50	7088169.5	0.0	210000	12.53
	6270.0	815.48	398580.9	906.8	80769	

Additional static properties of cross section

Alfa-T [1/°K]	ymin ymax [mm]	zmin zmax [mm]	hymin hzmin [mm]	AK AB [cm2]	MB	Tau-T Tau-B [1/m3]	Tau-Vy Tau-Vz [1/m2]
1.2E-05	-405.0	-856.8		9.424E+02		4.081E+02	2.058E+01
	405.0	856.8				1.255E+02	1.316E+01

Section values for warping

Wmin[cm2]	Wmax[cm2]	CM[cm6]	CMS[cm4]	ASwyy[cm6]	ASwzz[cm6]	ry[mm]	rz[mm]
-3379.07	3379.072774606703.		4228938.0	-0.65	-11.63	0.0	0.0

Design values of cross section

Mat NoR	A[cm2] It[cm4]	Ay/Az/Ayz [cm2]	Iy/Iz/Iyz [cm4]	ys/zs [mm]	modules [N/mm2]	gam [kN/m]
1	1596.71	607.50	7088169.5	0.0	182609	12.53
	6270.0	815.48	398580.9	906.8	70234	

Design forces and moments
(C/E = characteristic plastic/elastic, D=plast.Design, F=elast. Design)

	N[kN]	Vy[kN]	Vz[kN]	Mt[kNm]	My[kNm]	Mz[kNm]	y[mm]	z[mm]	BUCK
C	53489.9	14099.76	16782.63	753.59	32502.25	5323.24	0.0	906.8	c d
C	0.0				0.00	0.00	0.0	0.0	COMB
E	53489.9	9399.84	14695.46	473.92	27712.76	3296.90	0.0	906.8	
D	46512.9	12260.66	14593.59	655.30	28262.82	4628.91	0.0	906.8	
D	0.0				0.00	0.00	0.0	0.0	COMB
F	46512.9	8173.78	12778.66	412.11	24098.05	2866.87	0.0	906.8	

Additional Design Data

M	periphery-O/-I [m2/m] [m2/m]	deff [mm]	t-min [mm]	t-max [mm]	SMP [o/o]	thet-p [tm2/m]	thet-y [tm2/m]	thet-z [tm2/m]	thet-yz [tm2/m]
	6.577	48.6	45.0	52.0	0.0	0.588	0.556	0.031	

SOFiSTiK AG - www.sofistik.de

Composite bridge 38+50+38, b=14.25m, 2x2HL1100R HISTAR460 , slab 0.30m C30/37

Cross section No. 159.4 = CS 21 - reinf active:C2

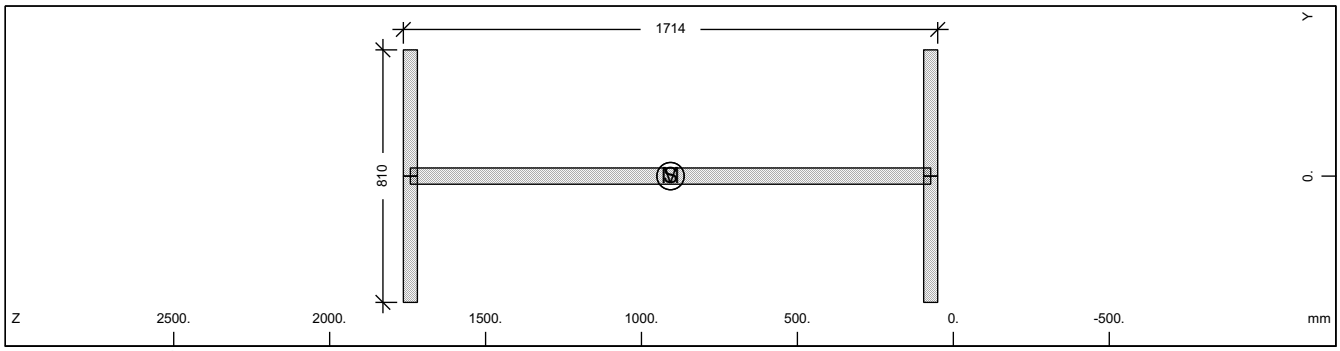

Cross section No. 159

Static properties of cross section

Mat NoR	A[cm2] It[cm4]	Ay/Az/Ayz [cm2]	Iy/Iz/Iyz [cm4]	ys/zs [mm]	modules [N/mm2]	gam [kN/m]
1	1596.71	607.50	7088169.5	0.0	210000	12.53
	6270.0	815.48	398580.9	906.8	80769	

Additional static properties of cross section

Alfa-T [1/°K]	ymin ymax [mm]	zmin zmax [mm]	hymin hzmin [mm]	AK AB [cm2]	MB	Tau-T Tau-B [1/m3]	Tau-Vy Tau-Vz [1/m2]
1.2E-05	-405.0	-856.8		9.424E+02		4.081E+02	2.058E+01
	405.0	856.8				1.255E+02	1.316E+01

Section values for warping

Wmin[cm2]	Wmax[cm2]	CM[cm6]	CMS[cm4]	ASwyy[cm6]	ASwzz[cm6]	ry[mm]	rz[mm]
-3379.07	3379.072774606703.		4228938.0	-0.65	-11.63	0.0	0.0

Design values of cross section

Mat NoR	A[cm2] It[cm4]	Ay/Az/Ayz [cm2]	Iy/Iz/Iyz [cm4]	ys/zs [mm]	modules [N/mm2]	gam [kN/m]
1	1596.71	607.50	7088169.5	0.0	182609	12.53
	6270.0	815.48	398580.9	906.8	70234	

Design forces and moments
(C/E = characteristic plastic/elastic, D=plast.Design, F=elast. Design)

	N[kN]	Vy[kN]	Vz[kN]	Mt[kNm]	My[kNm]	Mz[kNm]	y[mm]	z[mm]	BUCK
C	53489.9	14099.76	16782.63	753.59	32502.25	5323.24	0.0	906.8	c d
C	0.0				0.00	0.00	0.0	0.0	COMB
E	53489.9	9399.84	14695.46	473.92	27712.76	3296.90	0.0	906.8	
D	46512.9	12260.66	14593.59	655.30	28262.82	4628.91	0.0	906.8	
D	0.0				0.00	0.00	0.0	0.0	COMB
F	46512.9	8173.78	12778.66	412.11	24098.05	2866.87	0.0	906.8	

Additional Design Data

M	periphery-O/-I [m2/m] [m2/m]	deff [mm]	t-min [mm]	t-max [mm]	SMP [o/o]	thet-p [tm2/m]	thet-y [tm2/m]	thet-z [tm2/m]	thet-yz [tm2/m]
	6.577	48.6	45.0	52.0	0.0	0.588	0.556	0.031	

SOFiSTiK AG - www.sofistik.de

Composite bridge 38+50+38, b=14.25m, 2x2HL1100R HISTAR460 , slab 0.30m C30/37

Cross section No. 159.5 = CS 30 - in-situ conc:C3

Cross section No. 160 - VFT (153)

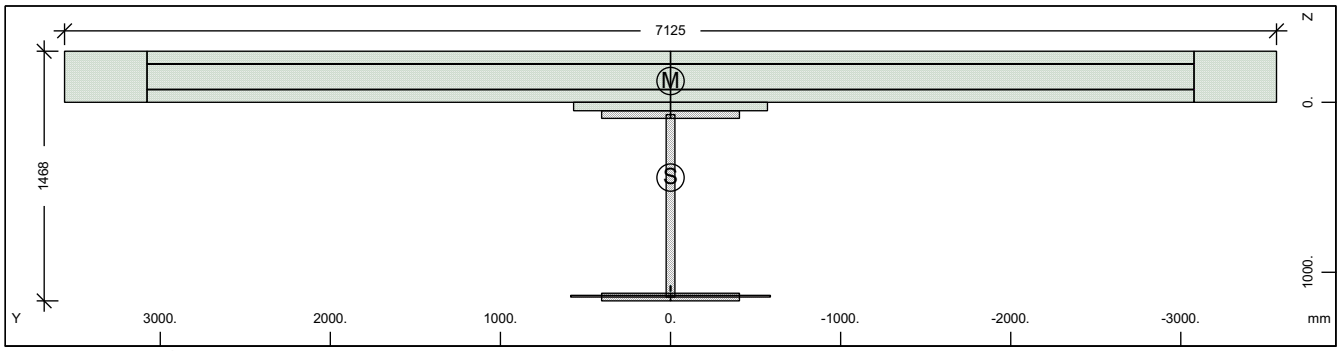

Cross section No. 160 - VFT (153)

Static properties of cross section

Mat NoR	A[cm2] It[cm4]	Ay/Az/Ayz [cm2]	Iy/Iz/Iyz [cm4]	ys/zs [mm]	y/z-sc [mm]	modules [N/mm2]	gam [kN/m]
1	1661.67	327.98	4335200.4	0.0	0.0	210000	65.26
	6270.0	269.37	12020384.	442.9	-124.8	80769	

Additional static properties of cross section

Alfa-T [1/°K]	ymin ymax [mm]	zmin zmax [mm]	hymin hzmin [mm]	AK AB [cm2]	MB	Tau-T Tau-B [1/m3]	Tau-Vy Tau-Vz [1/m2]
1.2E-05	-3562.5	-742.9		1.045E+02		1.629E+02	3.752E+01
	3562.5	725.1		2.206E+04		1.255E+02	4.516E+01

Section values for warping

Wmin[cm2]	Wmax[cm2]	CM[cm6]	CMS[cm4]	ASwyy[cm6]	ASwzz[cm6]	ry[mm]	rz[mm]
-5144.89	5144.894	021042508.	544117.7	149.47	53.91	0.0	-302.9

Partial cross sections

Mat NoR	A[cm2] It[cm4]	Ay/Az/Ayz [cm2]	Iy/Iz/Iyz [cm4]	ys/zs [mm]	modules [N/mm2]	gam [kN/m]
1	1286.97	0.19	2633691.0	0.0	210000	10.10
	9949.9	107.28	398580.9	609.0	80769	
25	117.41		9.8	0.0	10667	0.29
	539409.9	0.00	0.0	1140.5	4444	
210	0.64	0.00	0.0	0.0	200000	0.00
	2.2	0.00	0.0	1095.5	76923	
31	21945.00	29121.21	170028.4	0.0	0	54.86
	6417251.4	10462.30904880243.		-145.5	0	
300	386.53	344.18	21742.5	0.0	200000	0.00
	12.7	169.84	12202888.	-150.0	76923	

Design values of cross section

Mat NoR	A[cm2] It[cm4]	Ay/Az/Ayz [cm2]	Iy/Iz/Iyz [cm4]	ys/zs [mm]	modules [N/mm2]	gam [kN/m]
1	1660.28	327.98	4328423.4	0.0	182609	65.26
	6270.0	269.03	12020382.	442.4	70234	

Design forces and moments
(C/E = characteristic plastic/elastic, D=plast.Design, F=elast. Design)

	N[kN]	Vy[kN]	Vz[kN]	Mt[kNm]	My[kNm]	Mz[kNm]	y[mm]	z[mm]	BUCK
C	62472.2	61485.85	40247.80	99303.78	36330.21	90822.20	185.7	-98.1	c c
C	-79343.9				68814.52	0.00	0.0	442.9	COMB
C	-33093.6				0.00	92334.27	0.0	0.0	COMB
C	-70459.4	61485.85	40247.81	99303.79	-27853.4	-90756.8	-186.	93.2	
C	13156.7				-30323.1	0.00	0.0	442.9	COMB
C	-33093.6				0.00	-92334.3	0.0	0.0	COMB
E	55666.0	7693.98	6392.50	101.26	20029.69	20505.93	0.0	442.9	

SOFiSTiK AG - www.sofistik.de

Composite bridge 38+50+38, b=14.25m, 2x2HL1100R HISTAR460 , slab 0.30m C30/37

Design forces and moments
(C/E = characteristic plastic/elastic, D=plast.Design, F=elast. Design)

	N[kN]	Vy[kN]	Vz[kN]	Mt[kNm]	My[kNm]	Mz[kNm]	y[mm]	z[mm]	BUCK
E	-55666.0	7693.98	6392.50	101.26	-20029.7	-20505.9	0.0	442.9	
D	54323.7	46119.16	29651.44	66342.44	30549.31	68195.59	88.8	-75.5	
D	-55636.9				51979.01	0.00	0.0	442.9	COMB
D	-22062.4				0.00	68642.94	0.0	0.0	COMB
D	-59648.5	46119.16	29651.44	66342.44	-24145.5	-68174.8	-88.8	93.1	
D	11512.0				-26318.1	0.00	0.0	442.9	COMB
D	-22062.4				0.00	-68642.9	0.0	0.0	COMB
F	48405.2	6690.41	5558.70	67.51	17417.12	17831.25	0.0	442.9	
F	-48405.2	6690.41	5558.70	67.51	-17417.1	-17831.2	0.0	442.9	

Additional Design Data

M	periphery-O/-I [m2/m]	[m2/m]	deff [mm]	t-min [mm]	t-max [mm]	SMP [o/o]	thet-p [tm2/m]	thet-y [tm2/m]	thet-z [tm2/m]	thet-yz [tm2/m]
	46.560		7.1	3.1	300.0	0.0	23.390	0.737	22.653	
1	5.386		47.8	45.0	52.0	0.0	0.238	0.207	0.031	
25	0.020		1174.0			0.0	0.000	0.000		
**	0.004		32.0			0.0	0.000		0.000	
31	16.530		265.5	50.0	300.0	0.0	22.626	0.004	22.622	
**	24.620		3.1	3.1	3.1	0.0	0.000	0.000	0.000	

Cross section No. 160.1 = CS 1 - steel alone

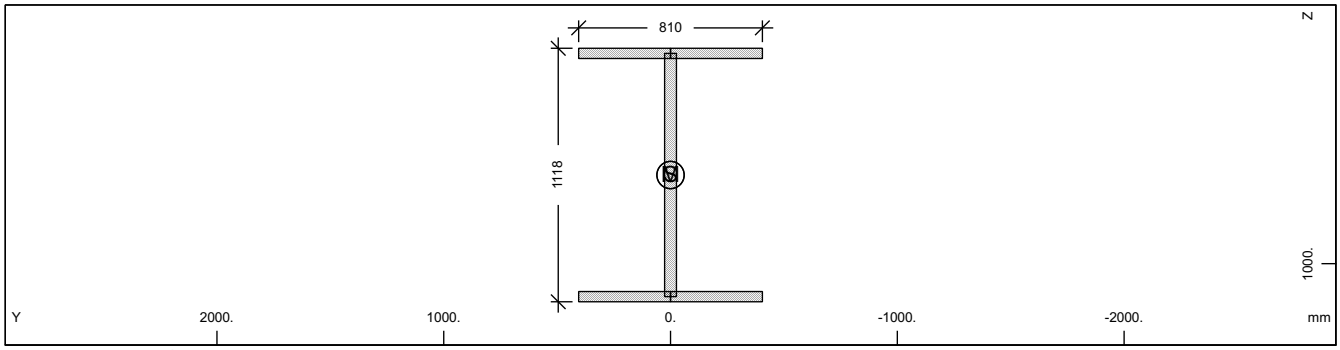

Cross section No. 160

Static properties of cross section

Mat NoR	A[cm2] It[cm4]	Ay/Az/Ayz [cm2]	Iy/Iz/Iyz [cm4]	ys/zs [mm]	modules [N/mm2]	gam [kN/m]
1	1286.97	607.50	2633691.0	0.0	210000	10.10
	6270.0	506.99	398580.9	609.0	80769	

Additional static properties of cross section

Alfa-T [1/°K]	ymin ymax [mm]	zmin zmax [mm]	hymin hzmin [mm]	AK AB [cm2]	MB	Tau-T Tau-B [1/m3]	Tau-Vy Tau-Vz [1/m2]
1.2E-05	-405.0	-559.0		7.359E+02		5.226E+02	2.058E+01
	405.0	559.0				1.255E+02	1.974E+01

Section values for warping

Wmin[cm2]	Wmax[cm2]	CM[cm6]	CMS[cm4]	ASwyy[cm6]	ASwzz[cm6]	ry[mm]	rz[mm]
-2172.85	2172.851147269625.		1748619.8	4.46	29.48	0.0	0.0

Design values of cross section

Mat NoR	A[cm2] It[cm4]	Ay/Az/Ayz [cm2]	Iy/Iz/Iyz [cm4]	ys/zs [mm]	modules [N/mm2]	gam [kN/m]
1	1286.97	607.50	2633691.0	0.0	182609	10.10
	6270.0	506.99	398580.9	609.0	70234	

SOFiSTiK AG - www.sofistik.de

Composite bridge 38+50+38, b=14.25m, 2x2HL1100R HISTAR460 , slab 0.30m C30/37

Design forces and moments
(C/E = characteristic plastic/elastic, D=plast.Design, F=elast. Design)

	N[kN]	Vy[kN]	Vz[kN]	Mt[kNm]	My[kNm]	Mz[kNm]	y[mm]	z[mm]	BUCK
C	43113.4	14099.76	10791.75	597.83	18116.43	5188.35	0.0	609.0	c c
C	0.0				0.00	0.00	0.0	0.0	COMB
E	43113.4	9399.84	9796.13	370.08	15783.13	3296.90	0.0	609.0	
D	37489.9	12260.66	9384.14	519.85	15753.42	4511.61	0.0	609.0	
D	0.0				0.00	0.00	0.0	0.0	COMB
F	37489.9	8173.78	8518.37	321.81	13724.46	2866.87	0.0	609.0	

Additional Design Data

M	periphery-O/-I [m2/m]	[m2/m]	deff [mm]	t-min [mm]	t-max [mm]	SMP [o/o]	thet-p [tm2/m]	thet-y [tm2/m]	thet-z [tm2/m]	thet-yz [tm2/m]
	5.386		47.8	45.0	52.0	0.0	0.238	0.207	0.031	

Cross section No. 160.2 = CS 10 - prefab. slab C1

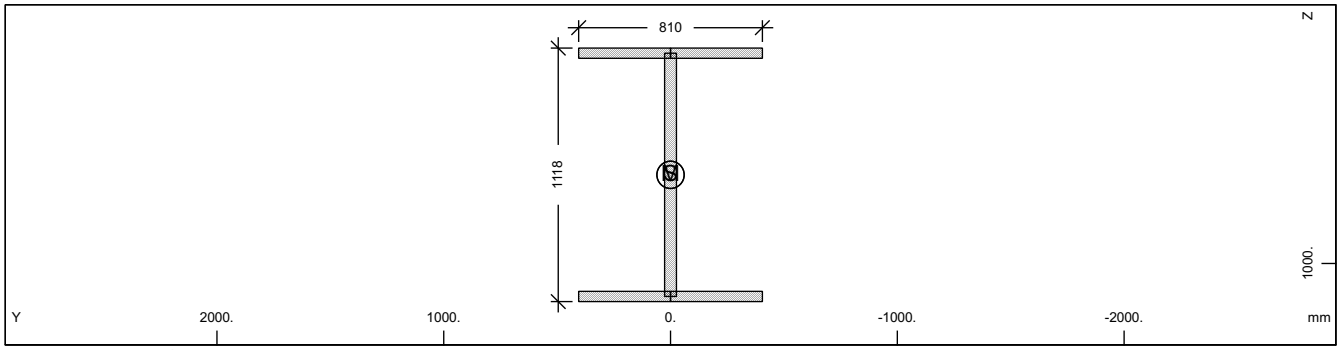

Cross section No. 160

Static properties of cross section

Mat NoR	A[cm2] It[cm4]	Ay/Az/Ayz [cm2]	Iy/Iz/Iyz [cm4]	ys/zs [mm]	modules [N/mm2]	gam [kN/m]
1	1286.97	607.50	2633691.0	0.0	210000	10.10
	6270.0	506.99	398580.9	609.0	80769	

Additional static properties of cross section

Alfa-T [1/°K]	ymin ymax [mm]	zmin zmax [mm]	hymin hzmin [mm]	AK AB [cm2]	MB	Tau-T Tau-B [1/m3]	Tau-Vy Tau-Vz [1/m2]
1.2E-05	-405.0	-559.0		7.359E+02		5.226E+02	2.058E+01
	405.0	559.0				1.255E+02	1.974E+01

Section values for warping

Wmin[cm2]	Wmax[cm2]	CM[cm6]	CMS[cm4]	ASwyy[cm6]	ASwzz[cm6]	ry[mm]	rz[mm]
-2172.85	2172.851147269625.		1748619.8	4.46	29.48	0.0	0.0

Design values of cross section

Mat NoR	A[cm2] It[cm4]	Ay/Az/Ayz [cm2]	Iy/Iz/Iyz [cm4]	ys/zs [mm]	modules [N/mm2]	gam [kN/m]
1	1286.97	607.50	2633691.0	0.0	182609	10.10
	6270.0	506.99	398580.9	609.0	70234	

Design forces and moments
(C/E = characteristic plastic/elastic, D=plast.Design, F=elast. Design)

	N[kN]	Vy[kN]	Vz[kN]	Mt[kNm]	My[kNm]	Mz[kNm]	y[mm]	z[mm]	BUCK
C	43113.4	14099.76	10791.75	597.83	18116.43	5188.35	0.0	609.0	c c
C	0.0				0.00	0.00	0.0	0.0	COMB
E	43113.4	9399.84	9796.13	370.08	15783.13	3296.90	0.0	609.0	
D	37489.9	12260.66	9384.14	519.85	15753.42	4511.61	0.0	609.0	
D	0.0				0.00	0.00	0.0	0.0	COMB
F	37489.9	8173.78	8518.37	321.81	13724.46	2866.87	0.0	609.0	

SOFiSTiK AG - www.sofistik.de

Composite bridge 38+50+38, b=14.25m, 2x2HL1100R HISTAR460 , slab 0.30m C30/37

Additional Design Data

M	periphery-O/-I [m2/m]	[m2/m]	deff [mm]	t-min [mm]	t-max [mm]	SMP [o/o]	thet-p [tm2/m]	thet-y [tm2/m]	thet-z [tm2/m]	thet-yz [tm2/m]
	5.386		47.8	45.0	52.0	0.0	0.238	0.207	0.031	

Cross section No. 160.3 = CS 20 - in-situ conc:C2

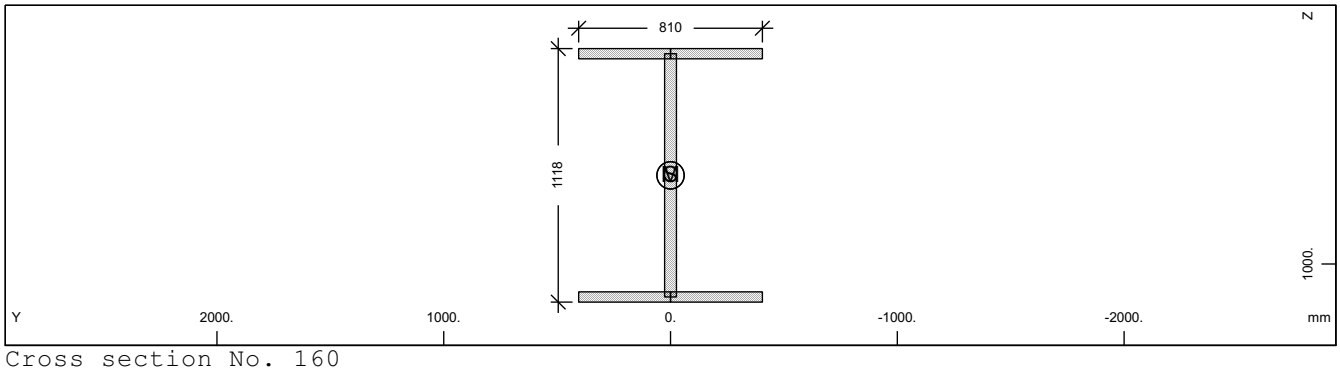

Cross section No. 160

Static properties of cross section

Mat NoR	A[cm2] It[cm4]	Ay/Az/Ayz [cm2]	Iy/Iz/Iyz [cm4]	ys/zs [mm]	modules [N/mm2]	gam [kN/m]
1	1286.97	607.50	2633691.0	0.0	210000	10.10
	6270.0	506.99	398580.9	609.0	80769	

Additional static properties of cross section

Alfa-T [1/°K]	ymin ymax [mm]	zmin zmax [mm]	hymin hzmin [mm]	AK AB [cm2]	MB	Tau-T Tau-B [1/m3]	Tau-Vy Tau-Vz [1/m2]
1.2E-05	-405.0	-559.0		7.359E+02		5.226E+02	2.058E+01
	405.0	559.0				1.255E+02	1.974E+01

Section values for warping

Wmin[cm2]	Wmax[cm2]	CM[cm6]	CMS[cm4]	ASwyy[cm6]	ASwzz[cm6]	ry[mm]	rz[mm]
-2172.85	2172.851147269625.		1748619.8	4.46	29.48	0.0	0.0

Design values of cross section

Mat NoR	A[cm2] It[cm4]	Ay/Az/Ayz [cm2]	Iy/Iz/Iyz [cm4]	ys/zs [mm]	modules [N/mm2]	gam [kN/m]
1	1286.97	607.50	2633691.0	0.0	182609	10.10
	6270.0	506.99	398580.9	609.0	70234	

Design forces and moments
(C/E = characteristic plastic/elastic, D=plast.Design, F=elast. Design)

	N[kN]	Vy[kN]	Vz[kN]	Mt[kNm]	My[kNm]	Mz[kNm]	y[mm]	z[mm]	BUCK
C	43113.4	14099.76	10791.75	597.83	18116.43	5188.35	0.0	609.0	c c
C	0.0				0.00	0.00	0.0	0.0	COMB
E	43113.4	9399.84	9796.13	370.08	15783.13	3296.90	0.0	609.0	
D	37489.9	12260.66	9384.14	519.85	15753.42	4511.61	0.0	609.0	
D	0.0				0.00	0.00	0.0	0.0	COMB
F	37489.9	8173.78	8518.37	321.81	13724.46	2866.87	0.0	609.0	

Additional Design Data

M	periphery-O/-I [m2/m]	[m2/m]	deff [mm]	t-min [mm]	t-max [mm]	SMP [o/o]	thet-p [tm2/m]	thet-y [tm2/m]	thet-z [tm2/m]	thet-yz [tm2/m]
	5.386		47.8	45.0	52.0	0.0	0.238	0.207	0.031	

SOFiSTiK AG - www.sofistik.de

Composite bridge 38+50+38, b=14.25m, 2x2HL1100R HISTAR460 , slab 0.30m C30/37

Cross section No. 160.4 = CS 21 - reinf active:C2

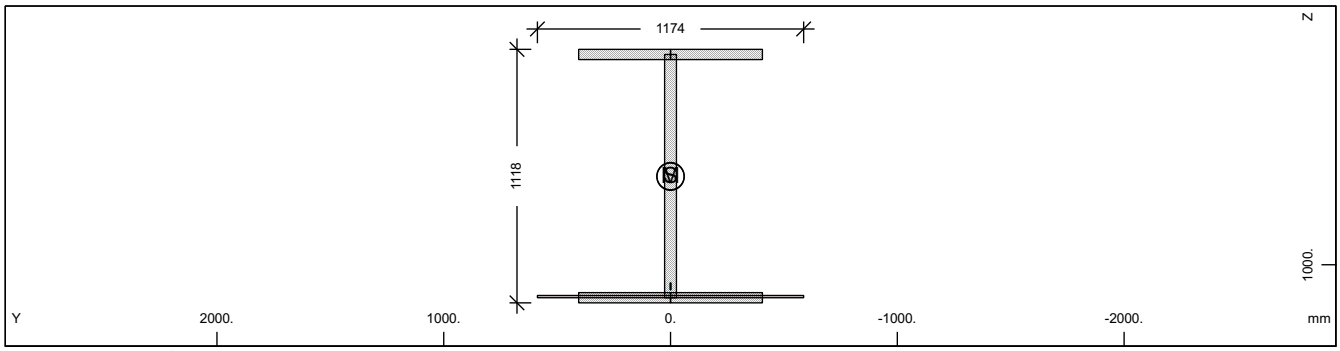

Cross section No. 160

Static properties of cross section

Mat / NoR	A[cm2] / It[cm4]	Ay/Az/Ayz [cm2]	Iy/Iz/Iyz [cm4]	ys/zs [mm]	modules [N/mm2]	gam [kN/m]
1	1293.54	607.50	2651895.4	0.0	210000	10.40
	6270.0	507.51	398580.9	611.7	80769	

Additional static properties of cross section

Alfa-T [1/°K]	ymin / ymax [mm]	zmin / zmax [mm]	hymin / hzmin [mm]	AK / AB [cm2]	MB	Tau-T / Tau-B [1/m3]	Tau-Vy / Tau-Vz [1/m2]
1.2E-05	-587.0	-561.7		1.045E+02		1.630E+02	2.058E+01
	587.0	556.3		1.174E+02		1.255E+02	1.973E+01

Section values for warping

Wmin[cm2]	Wmax[cm2]	CM[cm6]	CMS[cm4]	ASwyy[cm6]	ASwzz[cm6]	ry[mm]	rz[mm]
-2172.85	2172.851	147269625.	1748619.8	3.21	21.38	0.0	0.6

Partial cross sections

Mat / NoR	A[cm2] / It[cm4]	Ay/Az/Ayz [cm2]	Iy/Iz/Iyz [cm4]	ys/zs [mm]	modules [N/mm2]	gam [kN/m]
1	1286.97	607.50	2633691.0	0.0	210000	10.10
	9949.9	507.51	398580.9	609.0	80769	
25	117.41		9.8	0.0	10667	0.29
	539409.9	0.00	0.0	1140.5	4444	
210	0.64	0.00	0.0	0.0	200000	0.00
	2.2	0.00	0.0	1095.5	76923	

Design values of cross section

Mat / NoR	A[cm2] / It[cm4]	Ay/Az/Ayz [cm2]	Iy/Iz/Iyz [cm4]	ys/zs [mm]	modules [N/mm2]	gam [kN/m]
1	1292.15	607.50	2647999.7	0.0	182609	10.40
	6270.0	507.51	398580.9	611.1	70234	

Design forces and moments
(C/E = characteristic plastic/elastic, D=plast.Design, F=elast. Design)

	N[kN]	Vy[kN]	Vz[kN]	Mt[kNm]	My[kNm]	Mz[kNm]	y[mm]	z[mm]	BUCK
C	43145.5	14118.33	11447.36	719.23	18319.59	5240.21	0.1	609.4	c c
C	-78.7				18318.89	0.00	0.0	611.7	COMB
C	-176.1				0.00	5240.30	0.0	0.0	COMB
C	-43497.8	14118.33	11447.36	719.23	-18134.3	-5240.16	-0.1	619.5	
C	-273.5				-18132.6	0.00	0.0	611.7	COMB
C	-176.1				0.00	-5240.30	0.0	0.0	COMB
E	43333.7	9399.84	9801.25	101.23	15816.38	3296.90	0.0	611.7	
E	-43333.7	9399.84	9801.25	101.23	-15816.4	-3296.90	0.0	611.7	
D	37517.8	12276.81	9914.92	602.35	15892.00	4546.20	0.1	609.6	
D	-64.9				15891.57	0.00	0.0	611.7	COMB
D	-117.4				0.00	4546.29	0.0	0.0	COMB
D	-37752.7	12276.81	9914.92	602.35	-15768.2	-4546.18	-0.1	617.3	
D	-169.9				-15767.4	0.00	0.0	611.7	COMB
D	-117.4				0.00	-4546.29	0.0	0.0	COMB

SOFiSTiK AG - www.sofistik.de

Composite bridge 38+50+38, b=14.25m, 2x2HL1100R HISTAR460 , slab 0.30m C30/37

Design forces and moments
(C/E = characteristic plastic/elastic, D=plast.Design, F=elast. Design)

	N[kN]	Vy[kN]	Vz[kN]	Mt[kNm]	My[kNm]	Mz[kNm]	y[mm]	z[mm]	BUCK
F	37681.5	8173.78	8522.82	67.49	13753.38	2866.87	0.0	611.7	
F	-37681.5	8173.78	8522.82	67.49	-13753.4	-2866.87	0.0	611.7	

Additional Design Data

M	periphery-O/-I [m2/m]	[m2/m]	deff [mm]	t-min [mm]	t-max [mm]	SMP [o/o]	thet-p [tm2/m]	thet-y [tm2/m]	thet-z [tm2/m]	thet-yz [tm2/m]
	5.410		47.8	32.0	52.0	0.0	0.246	0.215	0.031	
1	5.386		47.8	45.0	52.0	0.0	0.238	0.207	0.031	
25	0.020		1174.0			0.0	0.000	0.000		
**	0.004		32.0			0.0	0.000		0.000	

Cross section No. 160.5 = CS 30 - in-situ conc:C3

Cross section No. 161 - VFT (153)

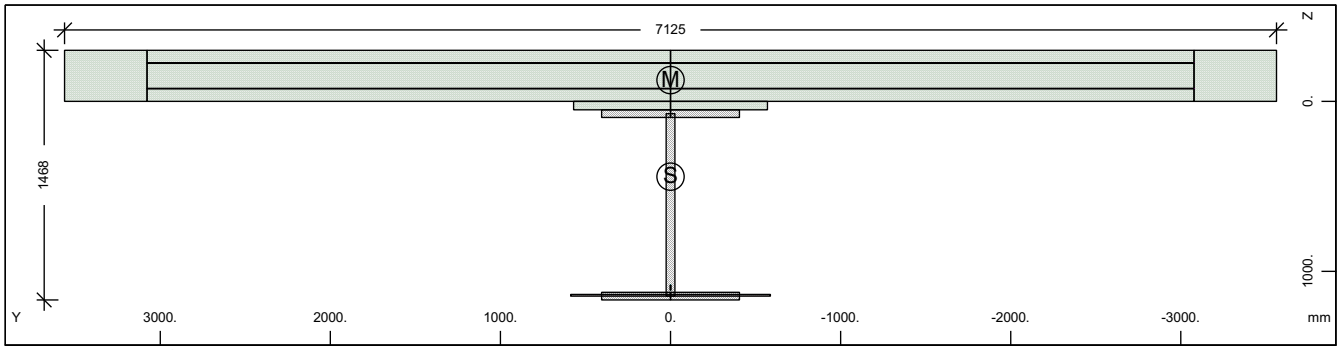

Cross section No. 161 - VFT (153)

Static properties of cross section

Mat NoR	A[cm2] It[cm4]	Ay/Az/Ayz [cm2]	Iy/Iz/Iyz [cm4]	ys/zs [mm]	y/z-sc [mm]	modules [N/mm2]	gam [kN/m]
1	1661.67	327.98	4335200.4	0.0	0.0	210000	65.26
	6270.0	269.37	12020384.	442.9	-124.8	80769	

Additional static properties of cross section

Alfa-T [1/°K]	ymin ymax [mm]	zmin zmax [mm]	hymin hzmin [mm]	AK AB [cm2]	MB	Tau-T Tau-B [1/m3]	Tau-Vy Tau-Vz [1/m2]
1.2E-05	-3562.5	-742.9		1.045E+02		1.629E+02	3.752E+01
	3562.5	725.1		2.206E+04		1.255E+02	4.516E+01

Section values for warping

Wmin[cm2]	Wmax[cm2]	CM[cm6]	CMS[cm4]	ASwyy[cm6]	ASwzz[cm6]	ry[mm]	rz[mm]
-5144.89	5144.894021042508.		544117.7	149.47	53.91	0.0	-302.9

Partial cross sections

Mat NoR	A[cm2] It[cm4]	Ay/Az/Ayz [cm2]	Iy/Iz/Iyz [cm4]	ys/zs [mm]	modules [N/mm2]	gam [kN/m]
1	1286.97	0.19	2633691.0	0.0	210000	10.10
	9949.9	107.28	398580.9	609.0	80769	
25	117.41		9.8	0.0	10667	0.29
	539409.9	0.00	0.0	1140.5	4444	
210	0.64	0.00	0.0	0.0	200000	0.00
	2.2	0.00	0.0	1095.5	76923	
31	21945.00	29121.21	170028.4	0.0	0	54.86
	6417251.4	10462.30904880243.		-145.5	0	
300	386.53	344.18	21742.5	0.0	200000	0.00
	12.7	169.84	12202888.	-150.0	76923	

SOFiSTiK AG - www.sofistik.de

Composite bridge 38+50+38, b=14.25m, 2x2HL1100R HISTAR460 , slab 0.30m C30/37

Design values of cross section

Mat NoR	A[cm2] It[cm4]	Ay/Az/Ayz [cm2]	Iy/Iz/Iyz [cm4]	ys/zs [mm]	modules [N/mm2]	gam [kN/m]
1	1660.28	327.98	4328423.4	0.0	182609	65.26
	6270.0	269.03	12020382.	442.4	70234	

Design forces and moments
(C/E = characteristic plastic/elastic, D=plast.Design, F=elast. Design)

	N[kN]	Vy[kN]	Vz[kN]	Mt[kNm]	My[kNm]	Mz[kNm]	y[mm]	z[mm]	BUCK
C	62472.2	61485.85	40247.80	99303.78	36330.21	90822.20	185.7	-98.1	c c
C	-79343.9				68814.52	0.00	0.0	442.9	COMB
C	-33093.6				0.00	92334.27	0.0	0.0	COMB
C	-70459.4	61485.85	40247.81	99303.79	-27853.4	-90756.8	-186.	93.2	
C	13156.7				-30323.1	0.00	0.0	442.9	COMB
C	-33093.6				0.00	-92334.3	0.0	0.0	COMB
E	55666.0	7693.98	6392.50	101.26	20029.69	20505.93	0.0	442.9	
E	-55666.0	7693.98	6392.50	101.26	-20029.7	-20505.9	0.0	442.9	
D	54323.7	46119.16	29651.44	66342.44	30549.31	68195.59	88.8	-75.5	
D	-55636.9				51979.01	0.00	0.0	442.9	COMB
D	-22062.4				0.00	68642.94	0.0	0.0	COMB
D	-59648.5	46119.16	29651.44	66342.44	-24145.5	-68174.8	-88.8	93.1	
D	11512.0				-26318.1	0.00	0.0	442.9	COMB
D	-22062.4				0.00	-68642.9	0.0	0.0	COMB
F	48405.2	6690.41	5558.70	67.51	17417.12	17831.25	0.0	442.9	
F	-48405.2	6690.41	5558.70	67.51	-17417.1	-17831.2	0.0	442.9	

Additional Design Data

M	periphery-O/-I [m2/m]	[m2/m]	deff [mm]	t-min [mm]	t-max [mm]	SMP [o/o]	thet-p [tm2/m]	thet-y [tm2/m]	thet-z [tm2/m]	thet-yz [tm2/m]
	46.560		7.1	3.1	300.0	0.0	23.390	0.737	22.653	
1	5.386		47.8	45.0	52.0	0.0	0.238	0.207	0.031	
25	0.020		1174.0			0.0	0.000	0.000		
**	0.004		32.0			0.0	0.000		0.000	
31	16.530		265.5	50.0	300.0	0.0	22.626	0.004	22.622	
**	24.620		3.1	3.1	3.1	0.0	0.000	0.000	0.000	

Cross section No. 161.1 = CS 1 - steel alone

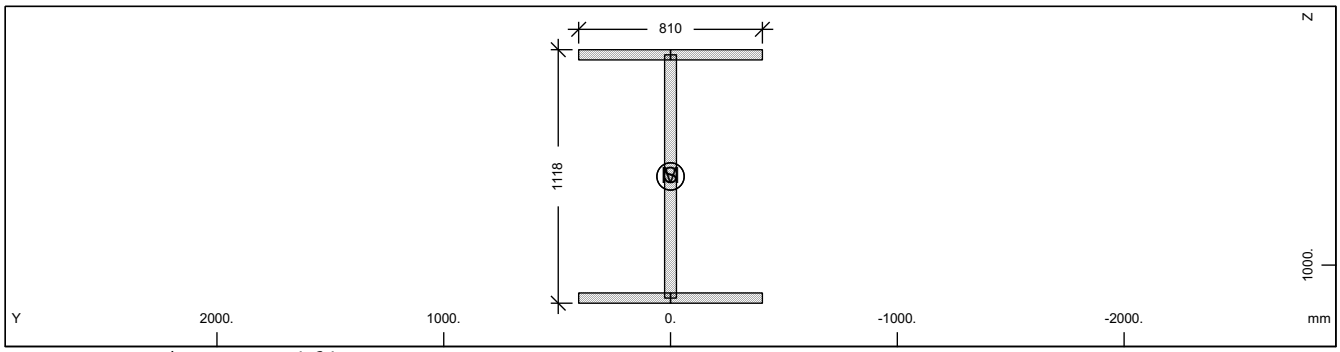

Cross section No. 161

Static properties of cross section

Mat NoR	A[cm2] It[cm4]	Ay/Az/Ayz [cm2]	Iy/Iz/Iyz [cm4]	ys/zs [mm]	modules [N/mm2]	gam [kN/m]
1	1286.97	607.50	2633691.0	0.0	210000	10.10
	6270.0	506.99	398580.9	609.0	80769	

Additional static properties of cross section

Alfa-T [1/°K]	ymin ymax [mm]	zmin zmax [mm]	hymin hzmin [mm]	AK AB [cm2]	MB	Tau-T Tau-B [1/m3]	Tau-Vy Tau-Vz [1/m2]
1.2E-05	-405.0	-559.0		7.359E+02		5.226E+02	2.058E+01
	405.0	559.0				1.255E+02	1.974E+01

SOFiSTiK AG - www.sofistik.de

Composite bridge 38+50+38, b=14.25m, 2x2HL1100R HISTAR460 , slab 0.30m C30/37

Section values for warping

Wmin[cm2]	Wmax[cm2]	CM[cm6]	CMS[cm4]	ASwyy[cm6]	ASwzz[cm6]	ry[mm]	rz[mm]
-2172.85	2172.851147269625.	1748619.8		4.46	29.48	0.0	0.0

Design values of cross section

Mat NoR	A[cm2] It[cm4]	Ay/Az/Ayz [cm2]	Iy/Iz/Iyz [cm4]	ys/zs [mm]	modules [N/mm2]	gam [kN/m]
1	1286.97	607.50	2633691.0	0.0	182609	10.10
	6270.0	506.99	398580.9	609.0	70234	

Design forces and moments
(C/E = characteristic plastic/elastic, D=plast.Design, F=elast. Design)

	N[kN]	Vy[kN]	Vz[kN]	Mt[kNm]	My[kNm]	Mz[kNm]	y[mm]	z[mm]	BUCK
C	43113.4	14099.76	10791.75	597.83	18116.43	5188.35	0.0	609.0	c c
C	0.0				0.00	0.00	0.0	0.0	COMB
E	43113.4	9399.84	9796.13	370.08	15783.13	3296.90	0.0	609.0	
D	37489.9	12260.66	9384.14	519.85	15753.42	4511.61	0.0	609.0	
D	0.0				0.00	0.00	0.0	0.0	COMB
F	37489.9	8173.78	8518.37	321.81	13724.46	2866.87	0.0	609.0	

Additional Design Data

M	periphery-O/-I [m2/m]	[m2/m]	deff [mm]	t-min [mm]	t-max [mm]	SMP [o/o]	thet-p [tm2/m]	thet-y [tm2/m]	thet-z [tm2/m]	thet-yz [tm2/m]
	5.386		47.8	45.0	52.0	0.0	0.238	0.207	0.031	

Cross section No. 161.2 = CS 10 - prefab. slab C1

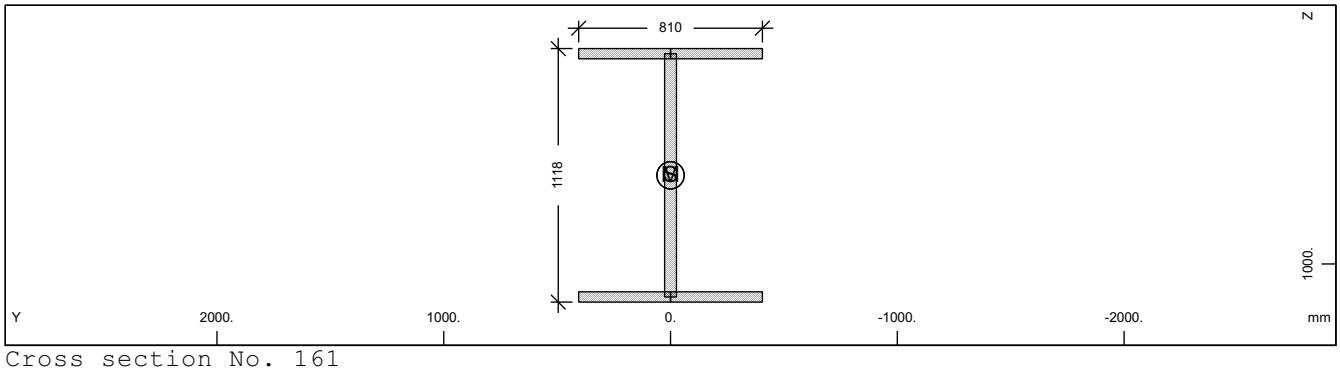

Cross section No. 161

Static properties of cross section

Mat NoR	A[cm2] It[cm4]	Ay/Az/Ayz [cm2]	Iy/Iz/Iyz [cm4]	ys/zs [mm]	modules [N/mm2]	gam [kN/m]
1	1286.97	607.50	2633691.0	0.0	210000	10.10
	6270.0	506.99	398580.9	609.0	80769	

Additional static properties of cross section

Alfa-T [1/°K]	ymin ymax [mm]	zmin zmax [mm]	hymin hzmin [mm]	AK AB [cm2]	MB	Tau-T Tau-B [1/m3]	Tau-Vy Tau-Vz [1/m2]
1.2E-05	-405.0	-559.0		7.359E+02		5.226E+02	2.058E+01
	405.0	559.0				1.255E+02	1.974E+01

Section values for warping

Wmin[cm2]	Wmax[cm2]	CM[cm6]	CMS[cm4]	ASwyy[cm6]	ASwzz[cm6]	ry[mm]	rz[mm]
-2172.85	2172.851147269625.	1748619.8		4.46	29.48	0.0	0.0

Design values of cross section

Mat NoR	A[cm2] It[cm4]	Ay/Az/Ayz [cm2]	Iy/Iz/Iyz [cm4]	ys/zs [mm]	modules [N/mm2]	gam [kN/m]
1	1286.97	607.50	2633691.0	0.0	182609	10.10
	6270.0	506.99	398580.9	609.0	70234	

SOFiSTiK AG - www.sofistik.de

Composite bridge 38+50+38, b=14.25m, 2x2HL1100R HISTAR460 , slab 0.30m C30/37

Design forces and moments
(C/E = characteristic plastic/elastic, D=plast.Design, F=elast. Design)

	N[kN]	Vy[kN]	Vz[kN]	Mt[kNm]	My[kNm]	Mz[kNm]	y[mm]	z[mm]	BUCK
C	43113.4	14099.76	10791.75	597.83	18116.43	5188.35	0.0	609.0	c c
C	0.0				0.00	0.00	0.0	0.0	COMB
E	43113.4	9399.84	9796.13	370.08	15783.13	3296.90	0.0	609.0	
D	37489.9	12260.66	9384.14	519.85	15753.42	4511.61	0.0	609.0	
D	0.0				0.00	0.00	0.0	0.0	COMB
F	37489.9	8173.78	8518.37	321.81	13724.46	2866.87	0.0	609.0	

Additional Design Data

M	periphery-O/-I [m2/m]	[m2/m]	deff [mm]	t-min [mm]	t-max [mm]	SMP [o/o]	thet-p [tm2/m]	thet-y [tm2/m]	thet-z [tm2/m]	thet-yz [tm2/m]
	5.386		47.8	45.0	52.0	0.0	0.238	0.207	0.031	

Cross section No. 161.3 = CS 20 - in-situ conc:C2

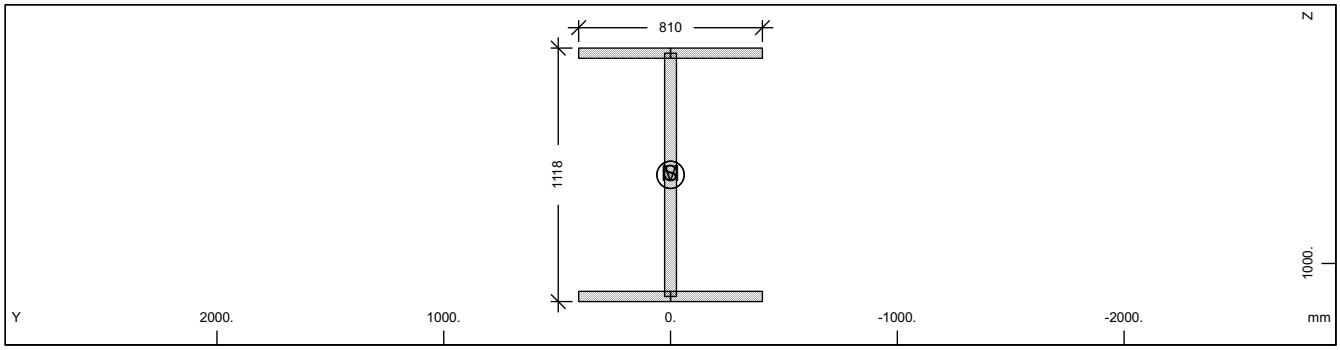

Cross section No. 161

Static properties of cross section

Mat NoR	A[cm2] It[cm4]	Ay/Az/Ayz [cm2]	Iy/Iz/Iyz [cm4]	ys/zs [mm]	modules [N/mm2]	gam [kN/m]
1	1286.97	607.50	2633691.0	0.0	210000	10.10
	6270.0	506.99	398580.9	609.0	80769	

Additional static properties of cross section

Alfa-T [1/°K]	ymin ymax [mm]	zmin zmax [mm]	hymin hzmin [mm]	AK AB [cm2]	MB	Tau-T Tau-B [1/m3]	Tau-Vy Tau-Vz [1/m2]
1.2E-05	-405.0	-559.0		7.359E+02		5.226E+02	2.058E+01
	405.0	559.0				1.255E+02	1.974E+01

Section values for warping

Wmin[cm2]	Wmax[cm2]	CM[cm6]	CMS[cm4]	ASwyy[cm6]	ASwzz[cm6]	ry[mm]	rz[mm]
-2172.85	2172.851147269625.		1748619.8	4.46	29.48	0.0	0.0

Design values of cross section

Mat NoR	A[cm2] It[cm4]	Ay/Az/Ayz [cm2]	Iy/Iz/Iyz [cm4]	ys/zs [mm]	modules [N/mm2]	gam [kN/m]
1	1286.97	607.50	2633691.0	0.0	182609	10.10
	6270.0	506.99	398580.9	609.0	70234	

Design forces and moments
(C/E = characteristic plastic/elastic, D=plast.Design, F=elast. Design)

	N[kN]	Vy[kN]	Vz[kN]	Mt[kNm]	My[kNm]	Mz[kNm]	y[mm]	z[mm]	BUCK
C	43113.4	14099.76	10791.75	597.83	18116.43	5188.35	0.0	609.0	c c
C	0.0				0.00	0.00	0.0	0.0	COMB
E	43113.4	9399.84	9796.13	370.08	15783.13	3296.90	0.0	609.0	
D	37489.9	12260.66	9384.14	519.85	15753.42	4511.61	0.0	609.0	
D	0.0				0.00	0.00	0.0	0.0	COMB
F	37489.9	8173.78	8518.37	321.81	13724.46	2866.87	0.0	609.0	

SOFiSTiK AG - www.sofistik.de

Composite bridge 38+50+38, b=14.25m, 2x2HL1100R HISTAR460 , slab 0.30m C30/37

Additional Design Data

M	periphery-O/-I [m2/m]	[m2/m]	deff [mm]	t-min [mm]	t-max [mm]	SMP [o/o]	thet-p [tm2/m]	thet-y [tm2/m]	thet-z [tm2/m]	thet-yz [tm2/m]
	5.386		47.8	45.0	52.0	0.0	0.238	0.207	0.031	

Cross section No. 161.4 = CS 21 - reinf active:C2

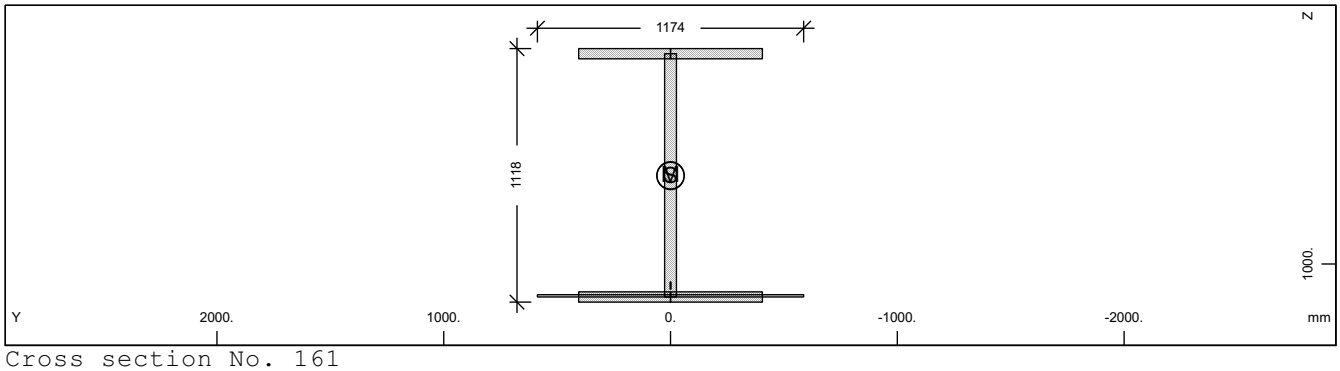

Cross section No. 161

Static properties of cross section

Mat NoR	A[cm2] It[cm4]	Ay/Az/Ayz [cm2]	Iy/Iz/Iyz [cm4]	ys/zs [mm]	modules [N/mm2]	gam [kN/m]
1	1293.54	607.50	2651895.4	0.0	210000	10.40
	6270.0	507.51	398580.9	611.7	80769	

Additional static properties of cross section

Alfa-T [1/°K]	ymin ymax [mm]	zmin zmax [mm]	hymin hzmin [mm]	AK AB [cm2]	MB	Tau-T Tau-B [1/m3]	Tau-Vy Tau-Vz [1/m2]
1.2E-05	-587.0	-561.7		1.045E+02		1.630E+02	2.058E+01
	587.0	556.3		1.174E+02		1.255E+02	1.973E+01

Section values for warping

Wmin[cm2]	Wmax[cm2]	CM[cm6]	CMS[cm4]	ASwyy[cm6]	ASwzz[cm6]	ry[mm]	rz[mm]
-2172.85	2172.851	147269625.	1748619.8	3.21	21.38	0.0	0.6

Partial cross sections

Mat NoR	A[cm2] It[cm4]	Ay/Az/Ayz [cm2]	Iy/Iz/Iyz [cm4]	ys/zs [mm]	modules [N/mm2]	gam [kN/m]
1	1286.97	607.50	2633691.0	0.0	210000	10.10
	9949.9	507.51	398580.9	609.0	80769	
25	117.41		9.8	0.0	10667	0.29
	539409.9	0.00	0.0	1140.5	4444	
210	0.64	0.00	0.0	0.0	200000	0.00
	2.2	0.00	0.0	1095.5	76923	

Design values of cross section

Mat NoR	A[cm2] It[cm4]	Ay/Az/Ayz [cm2]	Iy/Iz/Iyz [cm4]	ys/zs [mm]	modules [N/mm2]	gam [kN/m]
1	1292.15	607.50	2647999.7	0.0	182609	10.40
	6270.0	507.51	398580.9	611.1	70234	

Design forces and moments
(C/E = characteristic plastic/elastic, D=plast.Design, F=elast. Design)

	N[kN]	Vy[kN]	Vz[kN]	Mt[kNm]	My[kNm]	Mz[kNm]	y[mm]	z[mm]	BUCK
C	43145.5	14118.33	11447.36	719.23	18319.59	5240.21	0.1	609.4	c c
C	-78.7				18318.89	0.00	0.0	611.7	COMB
C	-176.1				0.00	5240.30	0.0	0.0	COMB
C	-43497.8	14118.33	11447.36	719.23	-18134.3	-5240.16	-0.1	619.5	
C	-273.5				-18132.6	0.00	0.0	611.7	COMB
C	-176.1				0.00	-5240.30	0.0	0.0	COMB
E	43333.7	9399.84	9801.25	101.23	15816.38	3296.90	0.0	611.7	
E	-43333.7	9399.84	9801.25	101.23	-15816.4	-3296.90	0.0	611.7	
D	37517.8	12276.81	9914.92	602.35	15892.00	4546.20	0.1	609.6	

SOFiSTiK AG - www.sofistik.de

Composite bridge 38+50+38, b=14.25m, 2x2HL1100R HISTAR460 , slab 0.30m C30/37

Design forces and moments
(C/E = characteristic plastic/elastic, D=plast.Design, F=elast. Design)

	N[kN]	Vy[kN]	Vz[kN]	Mt[kNm]	My[kNm]	Mz[kNm]	y[mm]	z[mm]	BUCK
D	-64.9				15891.57	0.00	0.0	611.7	COMB
D	-117.4				0.00	4546.29	0.0	0.0	COMB
D	-37752.7	12276.81	9914.92	602.35	-15768.2	-4546.18	-0.1	617.3	
D	-169.9				-15767.4	0.00	0.0	611.7	COMB
D	-117.4				0.00	-4546.29	0.0	0.0	COMB
F	37681.5	8173.78	8522.82	67.49	13753.38	2866.87	0.0	611.7	
F	-37681.5	8173.78	8522.82	67.49	-13753.4	-2866.87	0.0	611.7	

Additional Design Data

M	periphery-O/-I [m2/m]	[m2/m]	deff [mm]	t-min [mm]	t-max [mm]	SMP [o/o]	thet-p [tm2/m]	thet-y [tm2/m]	thet-z [tm2/m]	thet-yz [tm2/m]
	5.410		47.8	32.0	52.0	0.0	0.246	0.215	0.031	
1	5.386		47.8	45.0	52.0	0.0	0.238	0.207	0.031	
25	0.020		1174.0			0.0	0.000	0.000		
**	0.004		32.0			0.0	0.000		0.000	

Cross section No. 161.5 = CS 30 - in-situ conc:C3

Cross section No. 162 - VFT (153)

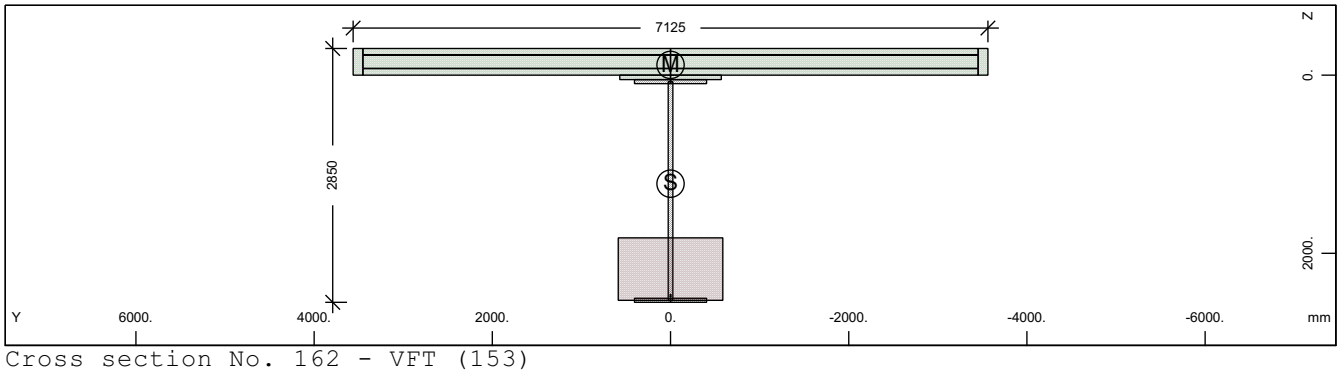

Cross section No. 162 - VFT (153)

Static properties of cross section

Mat NoR	A[cm2] It[cm4]	Ay/Az/Ayz [cm2]	Iy/Iz/Iyz [cm4]	ys/zs [mm]	y/z-sc [mm]	modules [N/mm2]	gam [kN/m]
1	2837.22	360.96	29308114.	0.0	0.0	210000	91.18
	6270.0	859.21	16807513.	1218.4	-115.6	80769	

Additional static properties of cross section

Alfa-T [1/°K]	ymin ymax [mm]	zmin zmax [mm]	hymin hzmin [mm]	AK AB [cm2]	MB	Tau-T Tau-B [1/m3]	Tau-Vy Tau-Vz [1/m2]
1.2E-05	-3562.5	-1518.4		5.530E+03		3.081E+00	3.377E+01
	3562.5	1331.6		3.017E+04		1.255E+02	1.619E+01

Section values for warping

Wmin[cm2]	Wmax[cm2]	CM[cm6]	CMS[cm4]	ASwyy[cm6]	ASwzz[cm6]	ry[mm]	rz[mm]
-10704.61	10704.61	1.511E+10	3656580.3	235.99	411.51	0.0	1827.2

Partial cross sections

Mat NoR	A[cm2] It[cm4]	Ay/Az/Ayz [cm2]	Iy/Iz/Iyz [cm4]	ys/zs [mm]	modules [N/mm2]	gam [kN/m]
1	2005.60	0.12	17396003.	0.0	210000	15.74
	16427.2	587.52	398580.9	1300.0	80769	
25	8229.74		3370085.0	0.0	10667	20.57
	37809512.	75.34	0.0	2177.0	4444	
210	0.64	0.00	0.0	0.0	200000	0.00
	2.2	0.00	0.0	2477.5	76923	
31	21945.00	18040.52	170028.4	0.0	0	54.86
	6417251.4	12406.34	904880243.	-145.5	0	

SOFiSTiK AG - www.sofistik.de

Composite bridge 38+50+38, b=14.25m, 2x2HL1100R HISTAR460 , slab 0.30m C30/37

300	433.63	378.88	24391.9	0.0	200000	0.00
	14.3	280.39	17229374.	-150.0	76923	

Design values of cross section

Mat	A[cm2]	Ay/Az/Ayz	Iy/Iz/Iyz	ys/zs	modules	gam
NoR	It[cm4]	[cm2]	[cm4]	[mm]	[N/mm2]	[kN/m]
1	2739.68	360.96	28339985.	0.0	182609	91.18
	6270.0	857.73	16807512.	1184.3	70234	

Design forces and moments
(C/E = characteristic plastic/elastic, D=plast.Design, F=elast. Design)

	N[kN]	Vy[kN]	Vz[kN]	Mt[kNm]	My[kNm]	Mz[kNm]	y[mm]	z[mm]	BUCK
C	88901.5	62845.51	67532.41	107524.5	99505.38	103961.3	26.0	-73.8	c c
C	-84641.8				175840.5	0.00	0.0	1218.	COMB
C	-45262.1				0.00	103907.8	0.0	0.0	COMB
C	-166226.	62845.51	67532.41	107524.5	-109221.	-103321.	-26.0	1387.	
C	-5882.5				-109718.	0.00	0.0	1218.	COMB
C	-45262.1				0.00	-103908.	0.0	0.0	COMB
E	95046.7	8548.00	17826.45	5355.94	73732.73	25558.13	0.0	1218.	
E	-95046.7	8548.00	17826.45	5355.94	-73732.7	-25558.1	0.0	1218.	
D	77305.6	47301.47	50661.32	71896.67	85226.16	78009.66	20.0	-22.1	
D	-60243.7				134686.6	0.00	0.0	1218.	COMB
D	-30174.7				0.00	77982.20	0.0	0.0	COMB
D	-128855.	47301.47	50661.32	71896.66	-90604.7	-77680.9	-20.0	1222.	
D	-105.8				-90604.8	0.00	0.0	1218.	COMB
D	-30174.7				0.00	-77982.2	0.0	0.0	COMB
F	82649.3	7433.05	15501.26	3570.63	64115.41	22224.46	0.0	1218.	
F	-82649.3	7433.05	15501.26	3570.63	-64115.4	-22224.5	0.0	1218.	

Additional Design Data

M	periphery-O/-I		deff	t-min	t-max	SMP	thet-p	thet-y	thet-z	thet-yz
	[m2/m]	[m2/m]	[mm]	[mm]	[mm]	[o/o]	[tm2/m]	[tm2/m]	[tm2/m]	[tm2/m]
	53.706		10.6	3.1	701.0	0.0	33.037	10.384	22.653	
1	8.150		49.2	45.0	52.0	0.0	1.397	1.366	0.031	
25	1.402		1174.0			0.0	0.084	0.084		
**	0.004		32.0			0.0	0.000		0.000	
31	16.530		265.5	50.0	300.0	0.0	22.626	0.004	22.622	
**	27.620		3.1	3.1	3.1	0.0	0.000	0.000	0.000	

Cross section No. 162.1 = CS 1 - steel alone

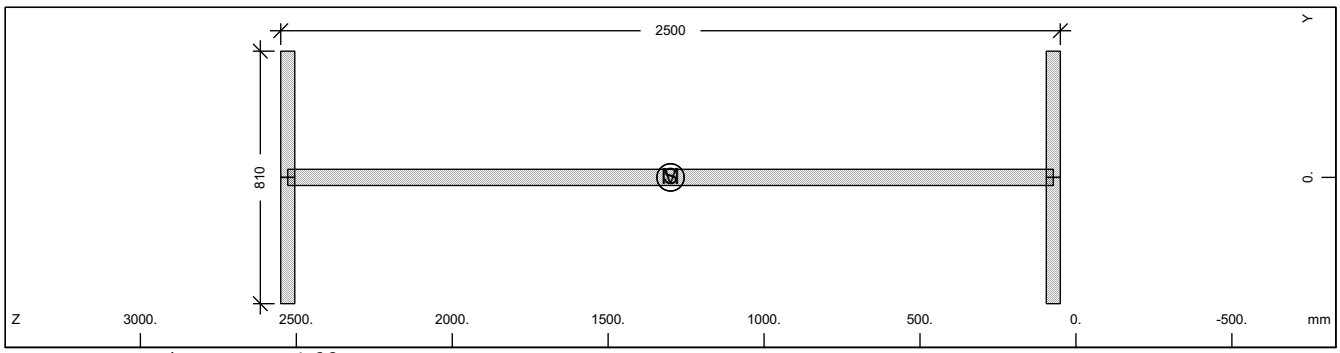

Cross section No. 162

Static properties of cross section

Mat	A[cm2]	Ay/Az/Ayz	Iy/Iz/Iyz	ys/zs	modules	gam
NoR	It[cm4]	[cm2]	[cm4]	[mm]	[N/mm2]	[kN/m]
1	2005.60	607.50	17396003.	0.0	210000	15.74
	6270.0	1212.92	398580.9	1300.0	80769	

SOFiSTiK AG - www.sofistik.de

Composite bridge 38+50+38, b=14.25m, 2x2HL1100R HISTAR460 , slab 0.30m C30/37

Additional static properties of cross section

Alfa-T	ymin ymax	zmin zmax	hymin hzmin	AK AB	MB	Tau-T Tau-B	Tau-Vy Tau-Vz
[1/°K]	[mm]	[mm]	[mm]	[cm2]		[1/m3]	[1/m2]
1.2E-05	-405.0	-1250.0		1.215E+03		3.165E+02	2.058E+01
	405.0	1250.0				1.255E+02	9.277E+00

Section values for warping

Wmin[cm2]	Wmax[cm2]	CM[cm6]	CMS[cm4]	ASwyy[cm6]	ASwzz[cm6]	ry[mm]	rz[mm]
-4971.38	4971.386005641563.		9153544.2	0.13	5.46	0.0	0.0

Design values of cross section

Mat NoR	A[cm2] It[cm4]	Ay/Az/Ayz [cm2]	Iy/Iz/Iyz [cm4]	ys/zs [mm]	modules [N/mm2]	gam [kN/m]
1	2005.60	607.50	17396003.	0.0	182609	15.74
	6270.0	1212.92	398580.9	1300.0	70234	

Design forces and moments
(C/E = characteristic plastic/elastic, D=plast.Design, F=elast. Design)

	N[kN]	Vy[kN]	Vz[kN]	Mt[kNm]	My[kNm]	Mz[kNm]	y[mm]	z[mm]	BUCK
C	67187.6	14099.76	24691.02	959.21	56225.09	5501.31	0.0	1300.	c c
C	0.0				0.00	0.00	0.0	0.0	COMB
E	67187.6	9399.84	20848.83	611.00	46621.29	3296.90	0.0	1300.	
D	58424.0	12260.66	21470.45	834.10	48891.38	4783.75	0.0	1300.	
D	0.0				0.00	0.00	0.0	0.0	COMB
F	58424.0	8173.78	18129.42	531.31	40540.25	2866.87	0.0	1300.	

Additional Design Data

M	periphery-O/-I [m2/m]	[m2/m]	deff [mm]	t-min [mm]	t-max [mm]	SMP [o/o]	thet-p [tm2/m]	thet-y [tm2/m]	thet-z [tm2/m]	thet-yz [tm2/m]
	8.150		49.2	45.0	52.0	0.0	1.397	1.366	0.031	

Cross section No. 162.2 = CS 10 - prefab. slab C1

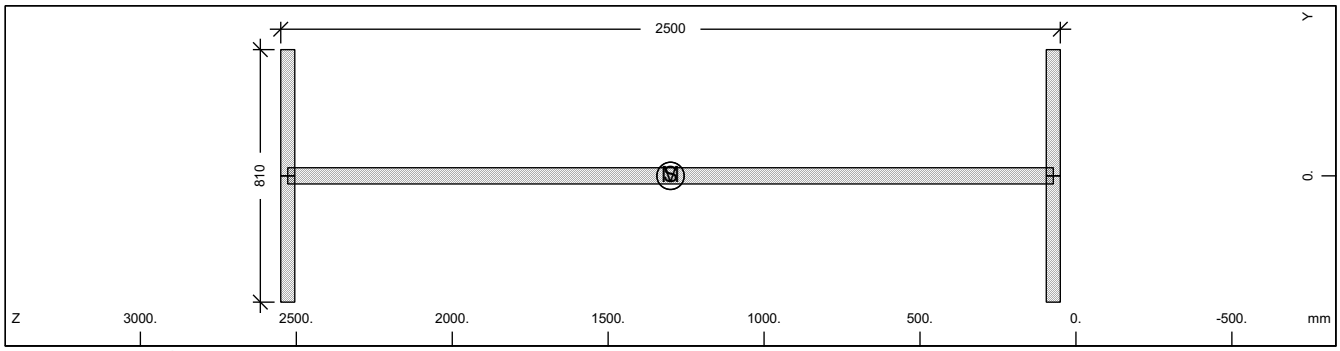

Cross section No. 162

Static properties of cross section

Mat NoR	A[cm2] It[cm4]	Ay/Az/Ayz [cm2]	Iy/Iz/Iyz [cm4]	ys/zs [mm]	modules [N/mm2]	gam [kN/m]
1	2005.60	607.50	17396003.	0.0	210000	15.74
	6270.0	1212.92	398580.9	1300.0	80769	

Additional static properties of cross section

Alfa-T	ymin ymax	zmin zmax	hymin hzmin	AK AB	MB	Tau-T Tau-B	Tau-Vy Tau-Vz
[1/°K]	[mm]	[mm]	[mm]	[cm2]		[1/m3]	[1/m2]
1.2E-05	-405.0	-1250.0		1.215E+03		3.165E+02	2.058E+01
	405.0	1250.0				1.255E+02	9.277E+00

Section values for warping

Wmin[cm2]	Wmax[cm2]	CM[cm6]	CMS[cm4]	ASwyy[cm6]	ASwzz[cm6]	ry[mm]	rz[mm]
-4971.38	4971.386005641563.		9153544.2	0.13	5.46	0.0	0.0

SOFiSTiK AG - www.sofistik.de

Composite bridge 38+50+38, b=14.25m, 2x2HL1100R HISTAR460 , slab 0.30m C30/37

Design values of cross section

Mat NoR	A[cm2] It[cm4]	Ay/Az/Ayz [cm2]	Iy/Iz/Iyz [cm4]	ys/zs [mm]	modules [N/mm2]	gam [kN/m]
1	2005.60	607.50	17396003.	0.0	182609	15.74
	6270.0	1212.92	398580.9	1300.0	70234	

Design forces and moments
(C/E = characteristic plastic/elastic, D=plast.Design, F=elast. Design)

	N[kN]	Vy[kN]	Vz[kN]	Mt[kNm]	My[kNm]	Mz[kNm]	y[mm]	z[mm]	BUCK
C	67187.6	14099.76	24691.02	959.21	56225.09	5501.31	0.0	1300.	c c
C	0.0				0.00	0.00	0.0	0.0	COMB
E	67187.6	9399.84	20848.83	611.00	46621.29	3296.90	0.0	1300.	
D	58424.0	12260.66	21470.45	834.10	48891.38	4783.75	0.0	1300.	
D	0.0				0.00	0.00	0.0	0.0	COMB
F	58424.0	8173.78	18129.42	531.31	40540.25	2866.87	0.0	1300.	

Additional Design Data

M	periphery-O/-I [m2/m] [m2/m]	deff [mm]	t-min [mm]	t-max [mm]	SMP [o/o]	thet-p [tm2/m]	thet-y [tm2/m]	thet-z [tm2/m]	thet-yz [tm2/m]
	8.150	49.2	45.0	52.0	0.0	1.397	1.366	0.031	

Cross section No. 162.3 = CS 20 - in-situ conc:C2

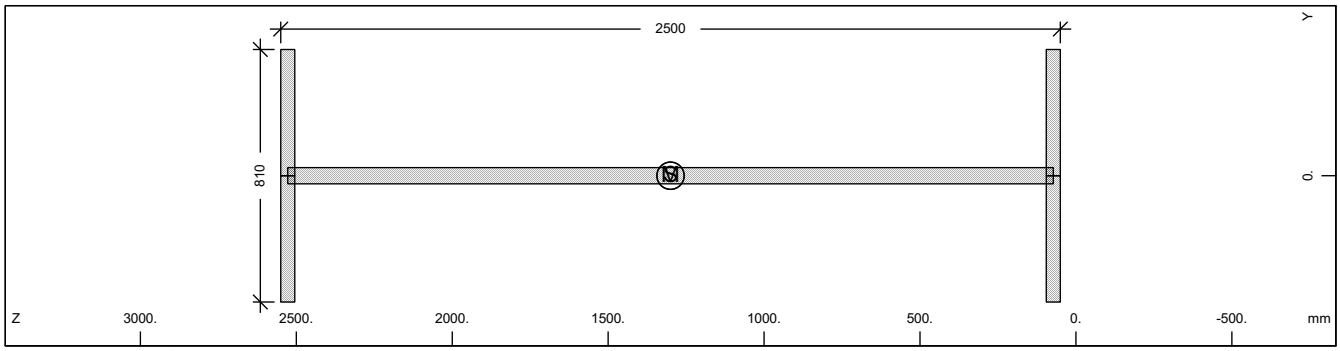

Cross section No. 162

Static properties of cross section

Mat NoR	A[cm2] It[cm4]	Ay/Az/Ayz [cm2]	Iy/Iz/Iyz [cm4]	ys/zs [mm]	modules [N/mm2]	gam [kN/m]
1	2005.60	607.50	17396003.	0.0	210000	15.74
	6270.0	1212.92	398580.9	1300.0	80769	

Additional static properties of cross section

Alfa-T [1/°K]	ymin ymax [mm]	zmin zmax [mm]	hymin hzmin [mm]	AK AB [cm2]	MB	Tau-T Tau-B [1/m3]	Tau-Vy Tau-Vz [1/m2]
1.2E-05	-405.0	-1250.0		1.215E+03		3.165E+02	2.058E+01
	405.0	1250.0				1.255E+02	9.277E+00

Section values for warping

Wmin[cm2]	Wmax[cm2]	CM[cm6]	CMS[cm4]	ASwyy[cm6]	ASwzz[cm6]	ry[mm]	rz[mm]
-4971.38	4971.386005641563.		9153544.2	0.13	5.46	0.0	0.0

Design values of cross section

Mat NoR	A[cm2] It[cm4]	Ay/Az/Ayz [cm2]	Iy/Iz/Iyz [cm4]	ys/zs [mm]	modules [N/mm2]	gam [kN/m]
1	2005.60	607.50	17396003.	0.0	182609	15.74
	6270.0	1212.92	398580.9	1300.0	70234	

Design forces and moments
(C/E = characteristic plastic/elastic, D=plast.Design, F=elast. Design)

	N[kN]	Vy[kN]	Vz[kN]	Mt[kNm]	My[kNm]	Mz[kNm]	y[mm]	z[mm]	BUCK
C	67187.6	14099.76	24691.02	959.21	56225.09	5501.31	0.0	1300.	c c
C	0.0				0.00	0.00	0.0	0.0	COMB
E	67187.6	9399.84	20848.83	611.00	46621.29	3296.90	0.0	1300.	

SOFiSTiK AG - www.sofistik.de

Composite bridge 38+50+38, b=14.25m, 2x2HL1100R HISTAR460 , slab 0.30m C30/37

Design forces and moments
(C/E = characteristic plastic/elastic, D=plast.Design, F=elast. Design)

	N[kN]	Vy[kN]	Vz[kN]	Mt[kNm]	My[kNm]	Mz[kNm]	y[mm]	z[mm]	BUCK
D	58424.0	12260.66	21470.45	834.10	48891.38	4783.75	0.0	1300.	
D	0.0				0.00	0.00	0.0	0.0	COMB
F	58424.0	8173.78	18129.42	531.31	40540.25	2866.87	0.0	1300.	

Additional Design Data

M	periphery-O/-I [m2/m]	[m2/m]	deff [mm]	t-min [mm]	t-max [mm]	SMP [o/o]	thet-p [tm2/m]	thet-y [tm2/m]	thet-z [tm2/m]	thet-yz [tm2/m]
	8.150		49.2	45.0	52.0	0.0	1.397	1.366	0.031	

Cross section No. 162.4 = CS 21 - reinf active:C2

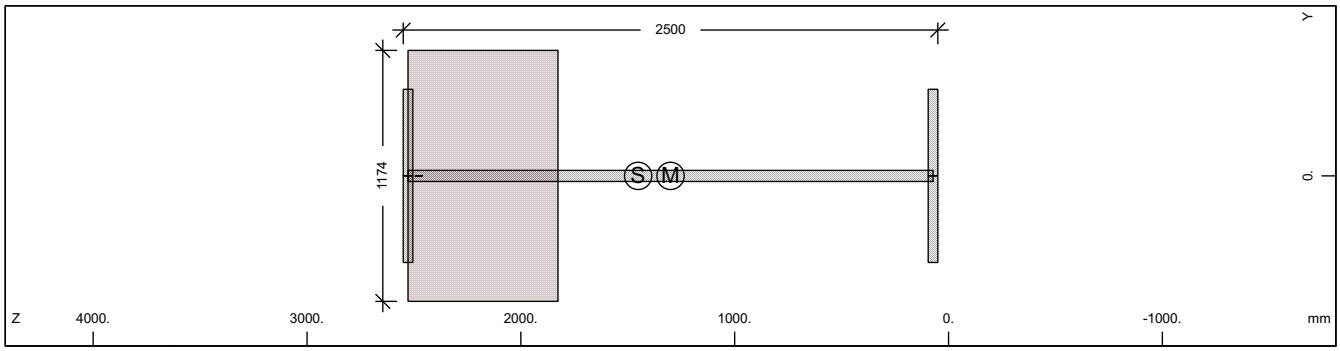

Cross section No. 162

Static properties of cross section

Mat NoR	A[cm2] It[cm4]	Ay/Az/Ayz [cm2]	Iy/Iz/Iyz [cm4]	ys/zs [mm]	modules [N/mm2]	gam [kN/m]
1	2424.23	607.50	20234200.	0.0	210000	36.32
	6270.0	1117.95	398580.9	1451.5	80769	

Additional static properties of cross section

Alfa-T [1/°K]	ymin ymax [mm]	zmin zmax [mm]	hymin hzmin [mm]	AK AB [cm2]	MB	Tau-T Tau-B [1/m3]	Tau-Vy Tau-Vz [1/m2]
1.2E-05	-587.0	-1401.5		5.530E+03		3.081E+00	2.058E+01
	587.0	1098.5		8.230E+03		1.255E+02	9.476E+00

Section values for warping

Wmin[cm2]	Wmax[cm2]	CM[cm6]	CMS[cm4]	ASwyy[cm6]	ASwzz[cm6]	ry[mm]	rz[mm]
-4971.38	4971.386005641563.		9153544.2	1.33	67.71	0.0	3.4

Partial cross sections

Mat NoR	A[cm2] It[cm4]	Ay/Az/Ayz [cm2]	Iy/Iz/Iyz [cm4]	ys/zs [mm]	modules [N/mm2]	gam [kN/m]
1	2005.60	607.50	17396003.	0.0	210000	15.74
	16427.2	1110.01	398580.9	1300.0	80769	
25	8229.74		3370085.0	0.0	10667	20.57
	37809512.	144.27	0.0	2177.0	4444	
210	0.64	0.00	0.0	0.0	200000	0.00
	2.2	0.00	0.0	2477.5	76923	

Design values of cross section

Mat NoR	A[cm2] It[cm4]	Ay/Az/Ayz [cm2]	Iy/Iz/Iyz [cm4]	ys/zs [mm]	modules [N/mm2]	gam [kN/m]
1	2326.69	607.50	19659379.	0.0	182609	36.32
	6270.0	1116.10	398580.9	1421.1	70234	

Design forces and moments
(C/E = characteristic plastic/elastic, D=plast.Design, F=elast. Design)

	N[kN]	Vy[kN]	Vz[kN]	Mt[kNm]	My[kNm]	Mz[kNm]	y[mm]	z[mm]	BUCK
C	67219.8	14118.33	38731.97	8937.81	56262.93	9260.35	7.3	1301.	c c
C	-5246.9				56658.02	0.00	0.0	1452.	COMB

SOFiSTiK AG - www.sofistik.de

Composite bridge 38+50+38, b=14.25m, 2x2HL1100R HISTAR460 , slab 0.30m C30/37

Design forces and moments
(C/E = characteristic plastic/elastic, D=plast.Design, F=elast. Design)

	N[kN]	Vy[kN]	Vz[kN]	Mt[kNm]	My[kNm]	Mz[kNm]	y[mm]	z[mm]	BUCK
C	-12344.6				0.00	9124.71	0.0	0.0	COMB
C	-91909.0	14118.33	38731.97	8937.81	-69438.1	-9080.62	-7.1	1918.	
C	-19442.4				-74569.5	0.00	0.0	1452.	COMB
C	-12344.6				0.00	-9124.71	0.0	0.0	COMB
E	81211.7	9399.84	20409.71	5355.91	48364.98	3296.90	0.0	1452.	
E	-81211.7	9399.84	20409.71	5355.91	-48365.0	-3296.90	0.0	1452.	
D	58452.0	12276.81	30924.80	6154.72	48924.29	7267.20	5.5	1301.	
D	-4562.5				49267.84	0.00	0.0	1452.	COMB
D	-8229.7				0.00	7199.40	0.0	0.0	COMB
D	-74911.4	12276.81	30924.80	6154.72	-52380.5	-7176.81	-5.5	1764.	
D	-11897.0				-61208.8	0.00	0.0	1452.	COMB
D	-8229.7				0.00	-7199.40	0.0	0.0	COMB
F	70618.9	8173.78	17747.57	3570.60	42056.51	2866.87	0.0	1452.	
F	-70618.9	8173.78	17747.57	3570.60	-42056.5	-2866.87	0.0	1452.	

Additional Design Data

M	periphery-O/-I [m2/m]	[m2/m]	deff [mm]	t-min [mm]	t-max [mm]	SMP [o/o]	thet-p [tm2/m]	thet-y [tm2/m]	thet-z [tm2/m]	thet-yz [tm2/m]
	9.556		50.7	32.0	701.0	0.0	2.167	2.136	0.031	
1	8.150		49.2	45.0	52.0	0.0	1.397	1.366	0.031	
25	1.402		1174.0			0.0	0.084	0.084		
**	0.004		32.0			0.0	0.000		0.000	

Cross section No. 162.5 = CS 30 - in-situ conc:C3

Cross section No. 163 - VFT (153)

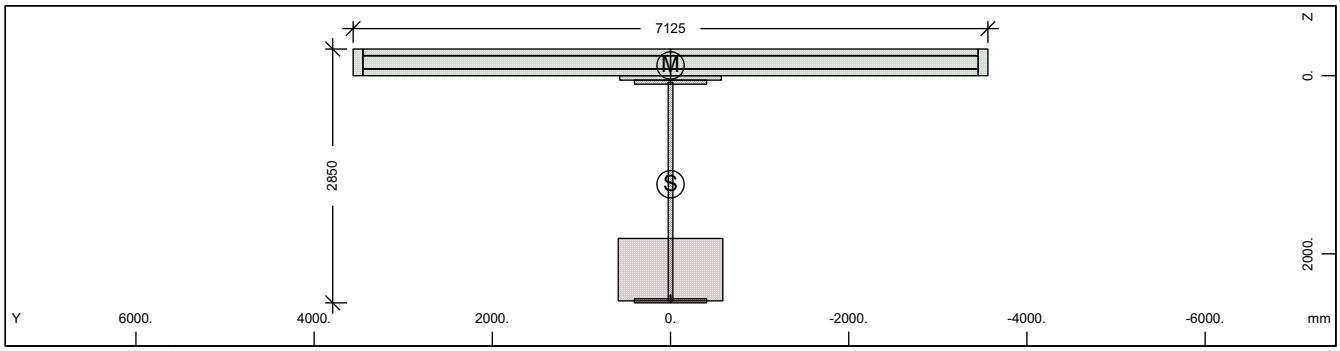

Cross section No. 163 - VFT (153)

Static properties of cross section

Mat / NoR	A[cm2] / It[cm4]	Ay/Az/Ayz [cm2]	Iy/Iz/Iyz [cm4]	ys/zs [mm]	y/z-sc [mm]	modules [N/mm2]	gam [kN/m]
1	2837.22	360.96	29308114.	0.0	0.0	210000	91.18
	6270.0	859.21	16807513.	1218.4	-115.6	80769	

Additional static properties of cross section

Alfa-T [1/°K]	ymin / ymax [mm]	zmin / zmax [mm]	hymin / hzmin [mm]	AK / AB [cm2]	MB	Tau-T / Tau-B [1/m3]	Tau-Vy / Tau-Vz [1/m2]
1.2E-05	-3562.5	-1518.4		5.530E+03		3.081E+00	3.377E+01
	3562.5	1331.6		3.017E+04		1.255E+02	1.619E+01

Section values for warping

Wmin[cm2]	Wmax[cm2]	CM[cm6]	CMS[cm4]	ASwyy[cm6]	ASwzz[cm6]	ry[mm]	rz[mm]
-10704.61	10704.61	1.511E+10	3656580.3	235.99	411.51	0.0	1827.2

SOFiSTiK AG - www.sofistik.de

Composite bridge 38+50+38, b=14.25m, 2x2HL1100R HISTAR460 , slab 0.30m C30/37

Partial cross sections

Mat NoR	A[cm2] It[cm4]	Ay/Az/Ayz [cm2]	Iy/Iz/Iyz [cm4]	ys/zs [mm]	modules [N/mm2]	gam [kN/m]
1	2005.60	0.12	17396003.	0.0	210000	15.74
	16427.2	587.52	398580.9	1300.0	80769	
25	8229.74		3370085.0	0.0	10667	20.57
	37809512.	75.34	0.0	2177.0	4444	
210	0.64	0.00	0.0	0.0	200000	0.00
	2.2	0.00	0.0	2477.5	76923	
31	21945.00	18040.52	170028.4	0.0	0	54.86
	6417251.4	12406.34	904880243.	-145.5	0	
300	433.63	378.88	24391.9	0.0	200000	0.00
	14.3	280.39	17229374.	-150.0	76923	

Design values of cross section

Mat NoR	A[cm2] It[cm4]	Ay/Az/Ayz [cm2]	Iy/Iz/Iyz [cm4]	ys/zs [mm]	modules [N/mm2]	gam [kN/m]
1	2739.68	360.96	28339985.	0.0	182609	91.18
	6270.0	857.73	16807512.	1184.3	70234	

Design forces and moments
(C/E = characteristic plastic/elastic, D=plast.Design, F=elast. Design)

	N[kN]	Vy[kN]	Vz[kN]	Mt[kNm]	My[kNm]	Mz[kNm]	y[mm]	z[mm]	BUCK
C	88901.5	62845.51	67532.41	107524.5	99505.38	103961.3	26.0	-73.8	c c
C	-84641.8				175840.5	0.00	0.0	1218.	COMB
C	-45262.1				0.00	103907.8	0.0	0.0	COMB
C	-166226.	62845.51	67532.41	107524.5	-109221.	-103321.	-26.0	1387.	
C	-5882.5				-109718.	0.00	0.0	1218.	COMB
C	-45262.1				0.00	-103908.	0.0	0.0	COMB
E	95046.7	8548.00	17826.45	5355.94	73732.73	25558.13	0.0	1218.	
E	-95046.7	8548.00	17826.45	5355.94	-73732.7	-25558.1	0.0	1218.	
D	77305.6	47301.47	50661.32	71896.67	85226.16	78009.66	20.0	-22.1	
D	-60243.7				134686.6	0.00	0.0	1218.	COMB
D	-30174.7				0.00	77982.20	0.0	0.0	COMB
D	-128855.	47301.47	50661.32	71896.66	-90604.7	-77680.9	-20.0	1222.	
D	-105.8				-90604.8	0.00	0.0	1218.	COMB
D	-30174.7				0.00	-77982.2	0.0	0.0	COMB
F	82649.3	7433.05	15501.26	3570.63	64115.41	22224.46	0.0	1218.	
F	-82649.3	7433.05	15501.26	3570.63	-64115.4	-22224.5	0.0	1218.	

Additional Design Data

M	periphery-O/-I [m2/m]	[m2/m]	deff [mm]	t-min [mm]	t-max [mm]	SMP [o/o]	thet-p [tm2/m]	thet-y [tm2/m]	thet-z [tm2/m]	thet-yz [tm2/m]
	53.706		10.6	3.1	701.0	0.0	33.037	10.384	22.653	
1	8.150		49.2	45.0	52.0	0.0	1.397	1.366	0.031	
25	1.402		1174.0			0.0	0.084	0.084		
**	0.004		32.0			0.0	0.000		0.000	
31	16.530		265.5	50.0	300.0	0.0	22.626	0.004	22.622	
**	27.620		3.1	3.1	3.1	0.0	0.000	0.000	0.000	

SOFiSTiK AG - www.sofistik.de

Composite bridge 38+50+38, b=14.25m, 2x2HL1100R HISTAR460 , slab 0.30m C30/37

Cross section No. 163.1 = CS 1 - steel alone

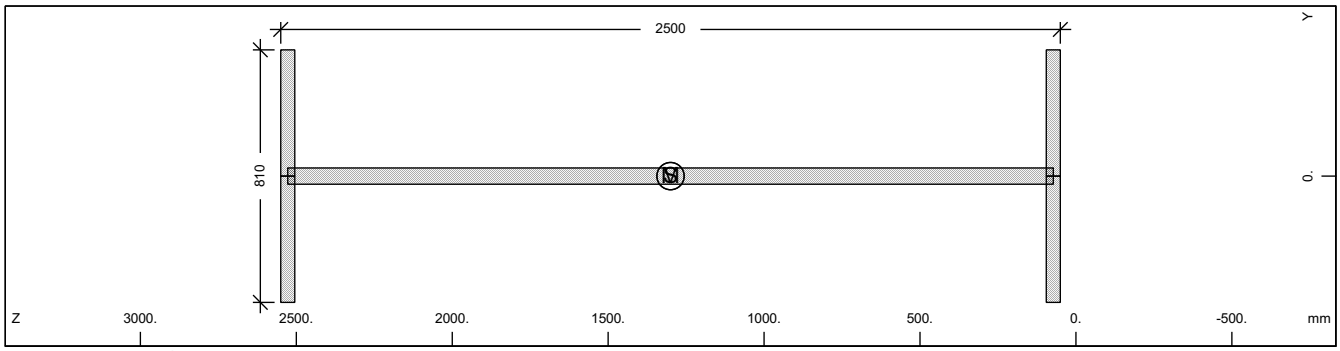

Cross section No. 163

Static properties of cross section

Mat NoR	A[cm2] It[cm4]	Ay/Az/Ayz [cm2]	Iy/Iz/Iyz [cm4]	ys/zs [mm]	modules [N/mm2]	gam [kN/m]
1	2005.60	607.50	17396003.	0.0	210000	15.74
	6270.0	1212.92	398580.9	1300.0	80769	

Additional static properties of cross section

Alfa-T [1/°K]	ymin ymax [mm]	zmin zmax [mm]	hymin hzmin [mm]	AK AB [cm2]	MB	Tau-T Tau-B [1/m3]	Tau-Vy Tau-Vz [1/m2]
1.2E-05	-405.0	-1250.0		1.215E+03		3.165E+02	2.058E+01
	405.0	1250.0				1.255E+02	9.277E+00

Section values for warping

Wmin[cm2]	Wmax[cm2]	CM[cm6]	CMS[cm4]	ASwyy[cm6]	ASwzz[cm6]	ry[mm]	rz[mm]
-4971.38	4971.38	6005641563.	9153544.2	0.13	5.46	0.0	0.0

Design values of cross section

Mat NoR	A[cm2] It[cm4]	Ay/Az/Ayz [cm2]	Iy/Iz/Iyz [cm4]	ys/zs [mm]	modules [N/mm2]	gam [kN/m]
1	2005.60	607.50	17396003.	0.0	182609	15.74
	6270.0	1212.92	398580.9	1300.0	70234	

Design forces and moments
(C/E = characteristic plastic/elastic, D=plast.Design, F=elast. Design)

	N[kN]	Vy[kN]	Vz[kN]	Mt[kNm]	My[kNm]	Mz[kNm]	y[mm]	z[mm]	BUCK
C	67187.6	14099.76	24691.02	959.21	56225.09	5501.31	0.0	1300.	c c
C	0.0				0.00	0.00	0.0	0.0	COMB
E	67187.6	9399.84	20848.83	611.00	46621.29	3296.90	0.0	1300.	
D	58424.0	12260.66	21470.45	834.10	48891.38	4783.75	0.0	1300.	
D	0.0				0.00	0.00	0.0	0.0	COMB
F	58424.0	8173.78	18129.42	531.31	40540.25	2866.87	0.0	1300.	

Additional Design Data

M	periphery-O/-I [m2/m] [m2/m]	deff [mm]	t-min [mm]	t-max [mm]	SMP [o/o]	thet-p [tm2/m]	thet-y [tm2/m]	thet-z [tm2/m]	thet-yz [tm2/m]
	8.150	49.2	45.0	52.0	0.0	1.397	1.366	0.031	

SOFiSTiK AG - www.sofistik.de

Composite bridge 38+50+38, b=14.25m, 2x2HL1100R HISTAR460 , slab 0.30m C30/37

Cross section No. 163.2 = CS 10 - prefab. slab C1

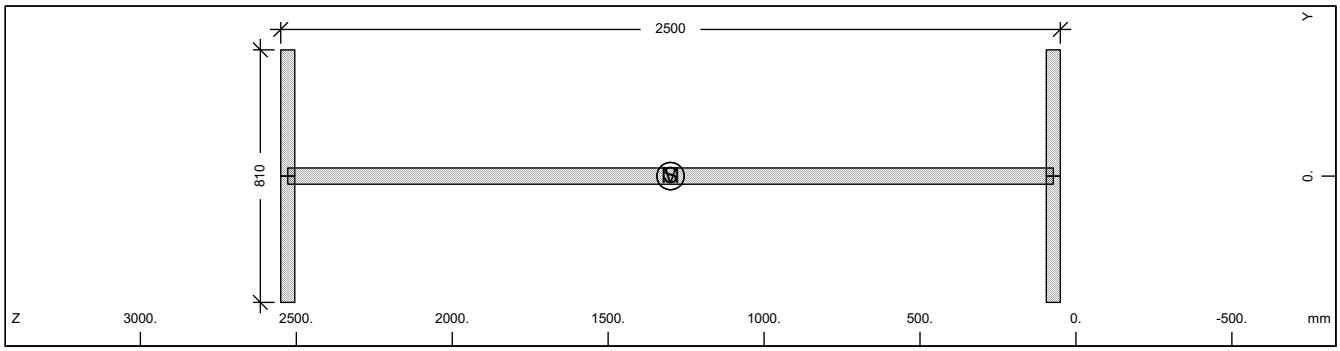

Cross section No. 163

Static properties of cross section

Mat NoR	A[cm2] It[cm4]	Ay/Az/Ayz [cm2]	Iy/Iz/Iyz [cm4]	ys/zs [mm]	modules [N/mm2]	gam [kN/m]
1	2005.60	607.50	17396003.	0.0	210000	15.74
	6270.0	1212.92	398580.9	1300.0	80769	

Additional static properties of cross section

Alfa-T [1/°K]	ymin ymax [mm]	zmin zmax [mm]	hymin hzmin [mm]	AK AB [cm2]	MB	Tau-T Tau-B [1/m3]	Tau-Vy Tau-Vz [1/m2]
1.2E-05	-405.0	-1250.0		1.215E+03		3.165E+02	2.058E+01
	405.0	1250.0				1.255E+02	9.277E+00

Section values for warping

Wmin[cm2]	Wmax[cm2]	CM[cm6]	CMS[cm4]	ASwyy[cm6]	ASwzz[cm6]	ry[mm]	rz[mm]
-4971.38	4971.38	6005641563.	9153544.2	0.13	5.46	0.0	0.0

Design values of cross section

Mat NoR	A[cm2] It[cm4]	Ay/Az/Ayz [cm2]	Iy/Iz/Iyz [cm4]	ys/zs [mm]	modules [N/mm2]	gam [kN/m]
1	2005.60	607.50	17396003.	0.0	182609	15.74
	6270.0	1212.92	398580.9	1300.0	70234	

Design forces and moments
(C/E = characteristic plastic/elastic, D=plast.Design, F=elast. Design)

	N[kN]	Vy[kN]	Vz[kN]	Mt[kNm]	My[kNm]	Mz[kNm]	y[mm]	z[mm]	BUCK
C	67187.6	14099.76	24691.02	959.21	56225.09	5501.31	0.0	1300.	c c
C	0.0				0.00	0.00	0.0	0.0	COMB
E	67187.6	9399.84	20848.83	611.00	46621.29	3296.90	0.0	1300.	
D	58424.0	12260.66	21470.45	834.10	48891.38	4783.75	0.0	1300.	
D	0.0				0.00	0.00	0.0	0.0	COMB
F	58424.0	8173.78	18129.42	531.31	40540.25	2866.87	0.0	1300.	

Additional Design Data

M	periphery-O/-I [m2/m] [m2/m]	deff [mm]	t-min [mm]	t-max [mm]	SMP [o/o]	thet-p [tm2/m]	thet-y [tm2/m]	thet-z [tm2/m]	thet-yz [tm2/m]
	8.150	49.2	45.0	52.0	0.0	1.397	1.366	0.031	

SOFiSTiK AG - www.sofistik.de

Composite bridge 38+50+38, b=14.25m, 2x2HL1100R HISTAR460 , slab 0.30m C30/37

Cross section No. 163.3 = CS 20 - in-situ conc:C2

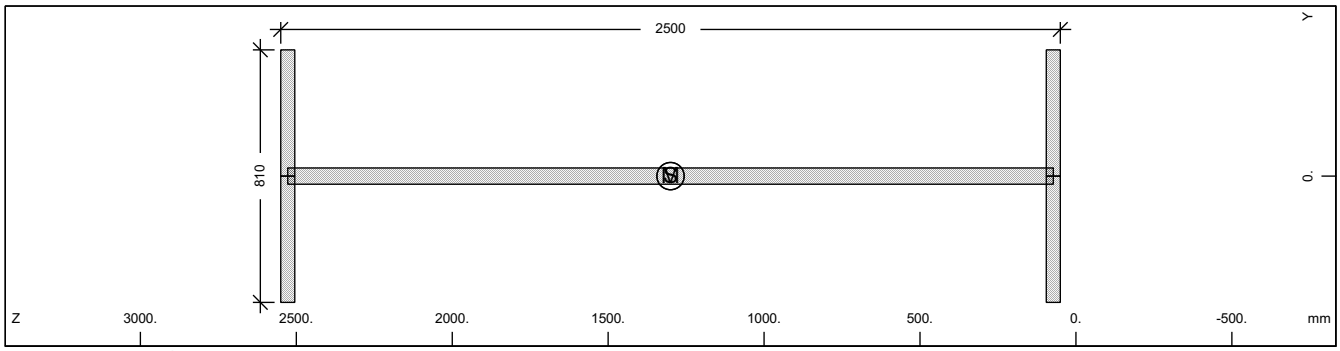

Cross section No. 163

Static properties of cross section

Mat / NoR	A[cm2] / It[cm4]	Ay/Az/Ayz [cm2]	Iy/Iz/Iyz [cm4]	ys/zs [mm]	modules [N/mm2]	gam [kN/m]
1	2005.60	607.50	17396003.	0.0	210000	15.74
	6270.0	1212.92	398580.9	1300.0	80769	

Additional static properties of cross section

Alfa-T [1/°K]	ymin / ymax [mm]	zmin / zmax [mm]	hymin / hzmin [mm]	AK / AB [cm2]	MB	Tau-T / Tau-B [1/m3]	Tau-Vy / Tau-Vz [1/m2]
1.2E-05	-405.0	-1250.0		1.215E+03		3.165E+02	2.058E+01
	405.0	1250.0				1.255E+02	9.277E+00

Section values for warping

Wmin[cm2]	Wmax[cm2]	CM[cm6]	CMS[cm4]	ASwyy[cm6]	ASwzz[cm6]	ry[mm]	rz[mm]
-4971.38	4971.38	6005641563.	9153544.2	0.13	5.46	0.0	0.0

Design values of cross section

Mat / NoR	A[cm2] / It[cm4]	Ay/Az/Ayz [cm2]	Iy/Iz/Iyz [cm4]	ys/zs [mm]	modules [N/mm2]	gam [kN/m]
1	2005.60	607.50	17396003.	0.0	182609	15.74
	6270.0	1212.92	398580.9	1300.0	70234	

Design forces and moments
(C/E = characteristic plastic/elastic, D=plast.Design, F=elast. Design)

	N[kN]	Vy[kN]	Vz[kN]	Mt[kNm]	My[kNm]	Mz[kNm]	y[mm]	z[mm]	BUCK
C	67187.6	14099.76	24691.02	959.21	56225.09	5501.31	0.0	1300.	c c
C	0.0				0.00	0.00	0.0	0.0	COMB
E	67187.6	9399.84	20848.83	611.00	46621.29	3296.90	0.0	1300.	
D	58424.0	12260.66	21470.45	834.10	48891.38	4783.75	0.0	1300.	
D	0.0				0.00	0.00	0.0	0.0	COMB
F	58424.0	8173.78	18129.42	531.31	40540.25	2866.87	0.0	1300.	

Additional Design Data

M	periphery-O/-I [m2/m]	[m2/m]	deff [mm]	t-min [mm]	t-max [mm]	SMP [o/o]	thet-p [tm2/m]	thet-y [tm2/m]	thet-z [tm2/m]	thet-yz [tm2/m]
	8.150		49.2	45.0	52.0	0.0	1.397	1.366	0.031	

SOFiSTiK AG - www.sofistik.de

Composite bridge 38+50+38, b=14.25m, 2x2HL1100R HISTAR460 , slab 0.30m C30/37

Cross section No. 163.4 = CS 21 - reinf active:C2

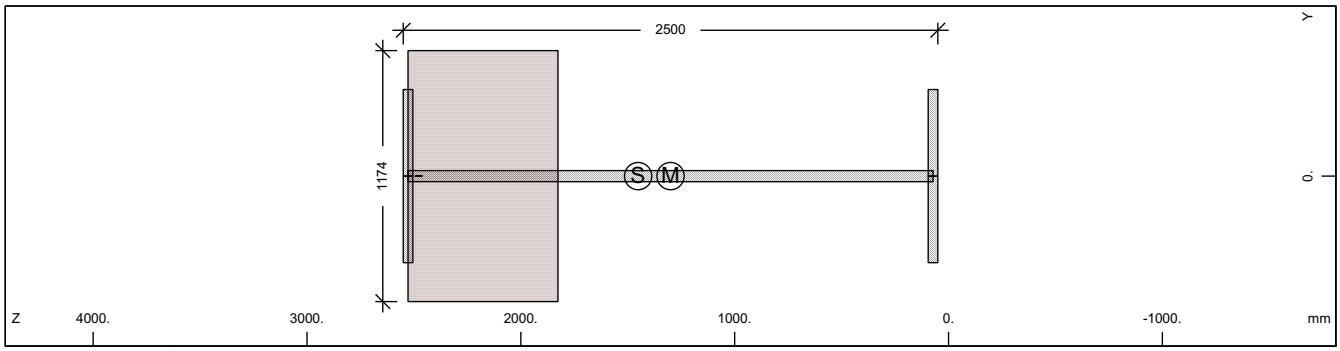

Cross section No. 163

Static properties of cross section

Mat NoR	A[cm2] It[cm4]	Ay/Az/Ayz [cm2]	Iy/Iz/Iyz [cm4]	ys/zs [mm]	modules [N/mm2]	gam [kN/m]
1	2424.23	607.50	20234200.	0.0	210000	36.32
	6270.0	1117.95	398580.9	1451.5	80769	

Additional static properties of cross section

Alfa-T [1/°K]	ymin ymax [mm]	zmin zmax [mm]	hymin hzmin [mm]	AK AB [cm2]	MB	Tau-T Tau-B [1/m3]	Tau-Vy Tau-Vz [1/m2]
1.2E-05	-587.0	-1401.5		5.530E+03		3.081E+00	2.058E+01
	587.0	1098.5		8.230E+03		1.255E+02	9.476E+00

Section values for warping

Wmin[cm2]	Wmax[cm2]	CM[cm6]	CMS[cm4]	ASwyy[cm6]	ASwzz[cm6]	ry[mm]	rz[mm]
-4971.38	4971.38	6005641563.	9153544.2	1.33	67.71	0.0	3.4

Partial cross sections

Mat NoR	A[cm2] It[cm4]	Ay/Az/Ayz [cm2]	Iy/Iz/Iyz [cm4]	ys/zs [mm]	modules [N/mm2]	gam [kN/m]
1	2005.60	607.50	17396003.	0.0	210000	15.74
	16427.2	1110.01	398580.9	1300.0	80769	
25	8229.74		3370085.0	0.0	10667	20.57
	37809512.	144.27	0.0	2177.0	4444	
210	0.64	0.00	0.0	0.0	200000	0.00
	2.2	0.00	0.0	2477.5	76923	

Design values of cross section

Mat NoR	A[cm2] It[cm4]	Ay/Az/Ayz [cm2]	Iy/Iz/Iyz [cm4]	ys/zs [mm]	modules [N/mm2]	gam [kN/m]
1	2326.69	607.50	19659379.	0.0	182609	36.32
	6270.0	1116.10	398580.9	1421.1	70234	

Design forces and moments
(C/E = characteristic plastic/elastic, D=plast.Design, F=elast. Design)

	N[kN]	Vy[kN]	Vz[kN]	Mt[kNm]	My[kNm]	Mz[kNm]	y[mm]	z[mm]	BUCK
C	67219.8	14118.33	38731.97	8937.81	56262.93	9260.35	7.3	1301.	c c
C	-5246.9				56658.02	0.00	0.0	1452.	COMB
C	-12344.6				0.00	9124.71	0.0	0.0	COMB
C	-91909.0	14118.33	38731.97	8937.81	-69438.1	-9080.62	-7.1	1918.	
C	-19442.4				-74569.5	0.00	0.0	1452.	COMB
C	-12344.6				0.00	-9124.71	0.0	0.0	COMB
E	81211.7	9399.84	20409.71	5355.91	48364.98	3296.90	0.0	1452.	
E	-81211.7	9399.84	20409.71	5355.91	-48365.0	-3296.90	0.0	1452.	
D	58452.0	12276.81	30924.80	6154.72	48924.29	7267.20	5.5	1301.	
D	-4562.5				49267.84	0.00	0.0	1452.	COMB
D	-8229.7				0.00	7199.40	0.0	0.0	COMB
D	-74911.4	12276.81	30924.80	6154.72	-52380.5	-7176.81	-5.5	1764.	
D	-11897.0				-61208.8	0.00	0.0	1452.	COMB
D	-8229.7				0.00	-7199.40	0.0	0.0	COMB

SOFiSTiK AG - www.sofistik.de

Composite bridge 38+50+38, b=14.25m, 2x2HL1100R HISTAR460 , slab 0.30m C30/37

Design forces and moments
(C/E = characteristic plastic/elastic, D=plast.Design, F=elast. Design)

	N[kN]	Vy[kN]	Vz[kN]	Mt[kNm]	My[kNm]	Mz[kNm]	y[mm]	z[mm]	BUCK
F	70618.9	8173.78	17747.57	3570.60	42056.51	2866.87	0.0	1452.	
F	-70618.9	8173.78	17747.57	3570.60	-42056.5	-2866.87	0.0	1452.	

Additional Design Data

M	periphery-O/-I [m2/m]	[m2/m]	deff [mm]	t-min [mm]	t-max [mm]	SMP [o/o]	thet-p [tm2/m]	thet-y [tm2/m]	thet-z [tm2/m]	thet-yz [tm2/m]
	9.556		50.7	32.0	701.0	0.0	2.167	2.136	0.031	
1	8.150		49.2	45.0	52.0	0.0	1.397	1.366	0.031	
25	1.402		1174.0			0.0	0.084	0.084		
**	0.004		32.0			0.0	0.000		0.000	

Cross section No. 163.5 = CS 30 - in-situ conc:C3

Cross section No. 164 - VFT (153)

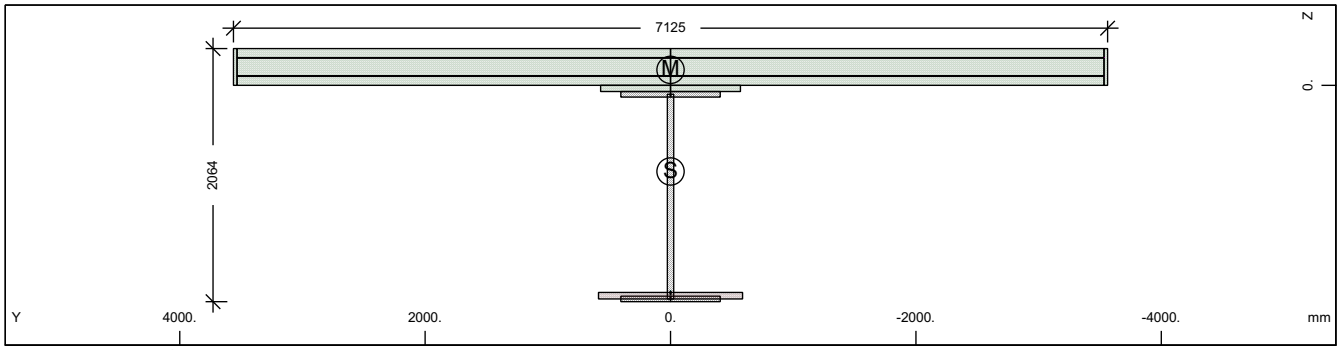

Cross section No. 164 - VFT (153)

Static properties of cross section

Mat NoR	A[cm2] It[cm4]	Ay/Az/Ayz [cm2]	Iy/Iz/Iyz [cm4]	ys/zs [mm]	y/z-sc [mm]	modules [N/mm2]	gam [kN/m]
1	2051.50	368.22	11179625.	0.0	0.0	210000	68.95
	6270.0	483.79	17983471.	701.8	-126.6	80769	

Additional static properties of cross section

Alfa-T [1/°K]	ymin ymax [mm]	zmin zmax [mm]	hymin hzmin [mm]	AK AB [cm2]	MB	Tau-T Tau-B [1/m3]	Tau-Vy Tau-Vz [1/m2]
1.2E-05	-3562.5	-1001.8		4.476E+02		3.806E+01	3.305E+01
	3562.5	1061.9		2.257E+04		1.255E+02	2.789E+01

Section values for warping

Wmin[cm2]	Wmax[cm2]	CM[cm6]	CMS[cm4]	ASwyy[cm6]	ASwzz[cm6]	ry[mm]	rz[mm]
-7564.50	7564.508117049965.		1120143.4	-204.17	-126.93	0.0	517.4

Partial cross sections

Mat NoR	A[cm2] It[cm4]	Ay/Az/Ayz [cm2]	Iy/Iz/Iyz [cm4]	ys/zs [mm]	modules [N/mm2]	gam [kN/m]
1	1596.73	0.11	7088401.2	0.0	210000	12.53
	12741.8	240.63	398580.9	906.9	80769	
25	620.94		1447.5	0.0	10667	1.55
	2852745.4	0.09	0.0	1714.8	4444	
210	0.64	0.00	0.0	0.0	200000	0.00
	2.2	0.00	0.0	1691.2	76923	
31	21945.00	16399.22	170028.4	0.0	0	54.86
	6417251.4	10473.13904880243.		-145.5	0	
300	443.75	386.52	24961.2	0.0	200000	0.00
	14.6	254.84	18464130.	-150.0	76923	

SOFiSTiK AG - www.sofistik.de

Composite bridge 38+50+38, b=14.25m, 2x2HL1100R HISTAR460 , slab 0.30m C30/37

Design values of cross section

Mat NoR	A[cm2] It[cm4]	Ay/Az/Ayz [cm2]	Iy/Iz/Iyz [cm4]	ys/zs [mm]	modules [N/mm2]	gam [kN/m]
1	2044.14	368.22	11103822.	0.0	182609	68.95
	6270.0	483.34	17983471.	698.1	70234	

Design forces and moments
(C/E = characteristic plastic/elastic, D=plast.Design, F=elast. Design)

	N[kN]	Vy[kN]	Vz[kN]	Mt[kNm]	My[kNm]	Mz[kNm]	y[mm]	z[mm]	BUCK
C	75710.2	63137.67	47069.75	99949.84	59657.41	101738.4	60.4	-75.8	c c
C	-80846.2				107944.6	0.00	0.0	701.8	COMB
C	-33848.9				0.00	102147.4	0.0	0.0	COMB
C	-139878.	63137.67	47069.75	99949.84	-51572.4	-101626.	-60.4	324.6	
C	13148.3				-54053.4	0.00	0.0	701.8	COMB
C	-33848.9				0.00	-102147.	0.0	0.0	COMB
E	68725.3	8733.64	10348.86	433.52	35268.12	26722.64	0.0	701.8	
E	-68725.3	8733.64	10348.86	433.52	-35268.1	-26722.6	0.0	701.8	
D	65834.9	47555.52	35414.98	66805.27	50778.27	76913.23	21.7	-74.2	
D	-56943.2				82547.57	0.00	0.0	701.8	COMB
D	-22565.9				0.00	77131.13	0.0	0.0	COMB
D	-108613.	47555.52	35414.98	66805.27	-44317.7	-76886.3	-21.7	312.1	
D	11811.3				-46620.1	0.00	0.0	701.8	COMB
D	-22565.9				0.00	-77131.1	0.0	0.0	COMB
F	59761.1	7594.47	8999.01	289.02	30667.93	23237.08	0.0	701.8	
F	-59761.1	7594.47	8999.01	289.02	-30667.9	-23237.1	0.0	701.8	

Additional Design Data

M	periphery-O/-I [m2/m]	[m2/m]	deff [mm]	t-min [mm]	t-max [mm]	SMP [o/o]	thet-p [tm2/m]	thet-y [tm2/m]	thet-z [tm2/m]	thet-yz [tm2/m]
	51.482		8.0	3.1	300.0	0.0	24.764	2.111	22.653	
1	6.577		48.6	45.0	52.0	0.0	0.588	0.556	0.031	
25	0.106		1174.0			0.0	0.000	0.000		
**	0.004		32.0			0.0	0.000		0.000	
31	16.530		265.5	50.0	300.0	0.0	22.626	0.004	22.622	
**	28.265		3.1	3.1	3.1	0.0	0.000	0.000	0.000	

Cross section No. 164.1 = CS 1 - steel alone

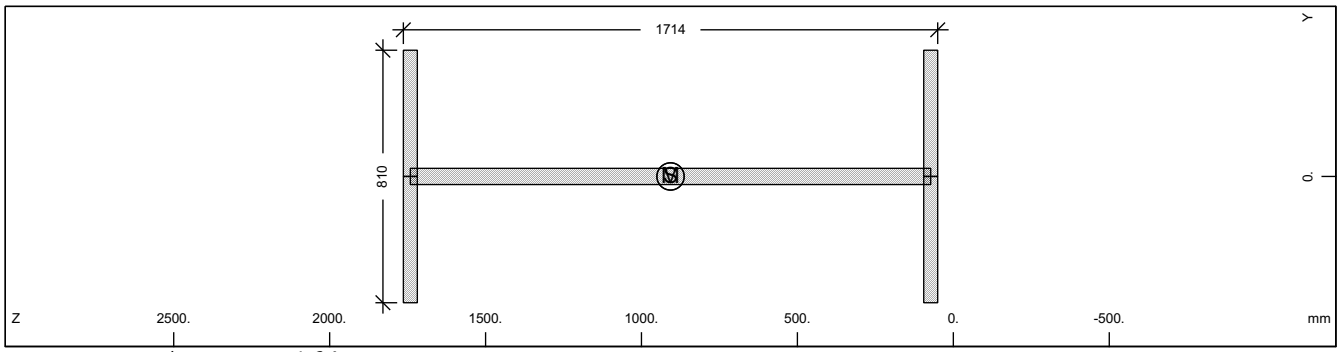

Cross section No. 164

Static properties of cross section

Mat NoR	A[cm2] It[cm4]	Ay/Az/Ayz [cm2]	Iy/Iz/Iyz [cm4]	ys/zs [mm]	modules [N/mm2]	gam [kN/m]
1	1596.73	607.50	7088401.2	0.0	210000	12.53
	6270.0	815.49	398580.9	906.9	80769	

Additional static properties of cross section

Alfa-T [1/°K]	ymin ymax [mm]	zmin zmax [mm]	hymin hzmin [mm]	AK AB [cm2]	MB	Tau-T Tau-B [1/m3]	Tau-Vy Tau-Vz [1/m2]
1.2E-05	-405.0	-856.9		9.424E+02		4.081E+02	2.058E+01
	405.0	856.9				1.255E+02	1.316E+01

SOFiSTiK AG - www.sofistik.de

Composite bridge 38+50+38, b=14.25m, 2x2HL1100R HISTAR460 , slab 0.30m C30/37

Section values for warping

Wmin[cm2]	Wmax[cm2]	CM[cm6]	CMS[cm4]	ASwyy[cm6]	ASwzz[cm6]	ry[mm]	rz[mm]
-3379.12	3379.122774685865.	4229058.7		-1.20	-21.27	0.0	0.0

Design values of cross section

Mat NoR	A[cm2] It[cm4]	Ay/Az/Ayz [cm2]	Iy/Iz/Iyz [cm4]	ys/zs [mm]	modules [N/mm2]	gam [kN/m]
1	1596.73	607.50	7088401.2	0.0	182609	12.53
	6270.0	815.49	398580.9	906.9	70234	

Design forces and moments
(C/E = characteristic plastic/elastic, D=plast.Design, F=elast. Design)

	N[kN]	Vy[kN]	Vz[kN]	Mt[kNm]	My[kNm]	Mz[kNm]	y[mm]	z[mm]	BUCK
C	53490.3	14099.76	16782.87	753.60	32502.88	5323.25	0.0	906.9	c c
C	0.0				0.00	0.00	0.0	0.0	COMB
E	53490.3	9399.84	14695.65	473.93	27713.28	3296.90	0.0	906.9	
D	46513.3	12260.66	14593.80	655.30	28263.38	4628.91	0.0	906.9	
D	0.0				0.00	0.00	0.0	0.0	COMB
F	46513.3	8173.78	12778.83	412.11	24098.51	2866.87	0.0	906.9	

Additional Design Data

M	periphery-O/-I [m2/m]	[m2/m]	deff [mm]	t-min [mm]	t-max [mm]	SMP [o/o]	thet-p [tm2/m]	thet-y [tm2/m]	thet-z [tm2/m]	thet-yz [tm2/m]
	6.577		48.6	45.0	52.0	0.0	0.588	0.556	0.031	

Cross section No. 164.2 = CS 10 - prefab. slab C1

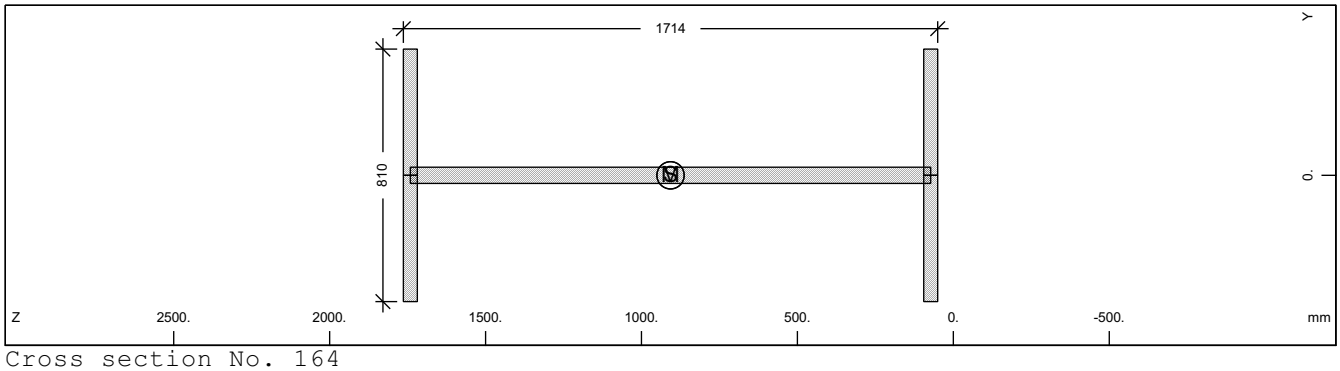

Cross section No. 164

Static properties of cross section

Mat NoR	A[cm2] It[cm4]	Ay/Az/Ayz [cm2]	Iy/Iz/Iyz [cm4]	ys/zs [mm]	modules [N/mm2]	gam [kN/m]
1	1596.73	607.50	7088401.2	0.0	210000	12.53
	6270.0	815.49	398580.9	906.9	80769	

Additional static properties of cross section

Alfa-T [1/°K]	ymin ymax [mm]	zmin zmax [mm]	hymin hzmin [mm]	AK AB [cm2]	MB	Tau-T Tau-B [1/m3]	Tau-Vy Tau-Vz [1/m2]
1.2E-05	-405.0	-856.9		9.424E+02		4.081E+02	2.058E+01
	405.0	856.9				1.255E+02	1.316E+01

Section values for warping

Wmin[cm2]	Wmax[cm2]	CM[cm6]	CMS[cm4]	ASwyy[cm6]	ASwzz[cm6]	ry[mm]	rz[mm]
-3379.12	3379.122774685865.	4229058.7		-1.20	-21.27	0.0	0.0

Design values of cross section

Mat NoR	A[cm2] It[cm4]	Ay/Az/Ayz [cm2]	Iy/Iz/Iyz [cm4]	ys/zs [mm]	modules [N/mm2]	gam [kN/m]
1	1596.73	607.50	7088401.2	0.0	182609	12.53
	6270.0	815.49	398580.9	906.9	70234	

SOFiSTiK AG - www.sofistik.de

Composite bridge 38+50+38, b=14.25m, 2x2HL1100R HISTAR460 , slab 0.30m C30/37

Design forces and moments
(C/E = characteristic plastic/elastic, D=plast.Design, F=elast. Design)

	N[kN]	Vy[kN]	Vz[kN]	Mt[kNm]	My[kNm]	Mz[kNm]	y[mm]	z[mm]	BUCK
C	53490.3	14099.76	16782.87	753.60	32502.88	5323.25	0.0	906.9	c c
C	0.0				0.00	0.00	0.0	0.0	COMB
E	53490.3	9399.84	14695.65	473.93	27713.28	3296.90	0.0	906.9	
D	46513.3	12260.66	14593.80	655.30	28263.38	4628.91	0.0	906.9	
D	0.0				0.00	0.00	0.0	0.0	COMB
F	46513.3	8173.78	12778.83	412.11	24098.51	2866.87	0.0	906.9	

Additional Design Data

M	periphery-O/-I [m2/m]	[m2/m]	deff [mm]	t-min [mm]	t-max [mm]	SMP [o/o]	thet-p [tm2/m]	thet-y [tm2/m]	thet-z [tm2/m]	thet-yz [tm2/m]
	6.577		48.6	45.0	52.0	0.0	0.588	0.556	0.031	

Cross section No. 164.3 = CS 20 - in-situ conc:C2

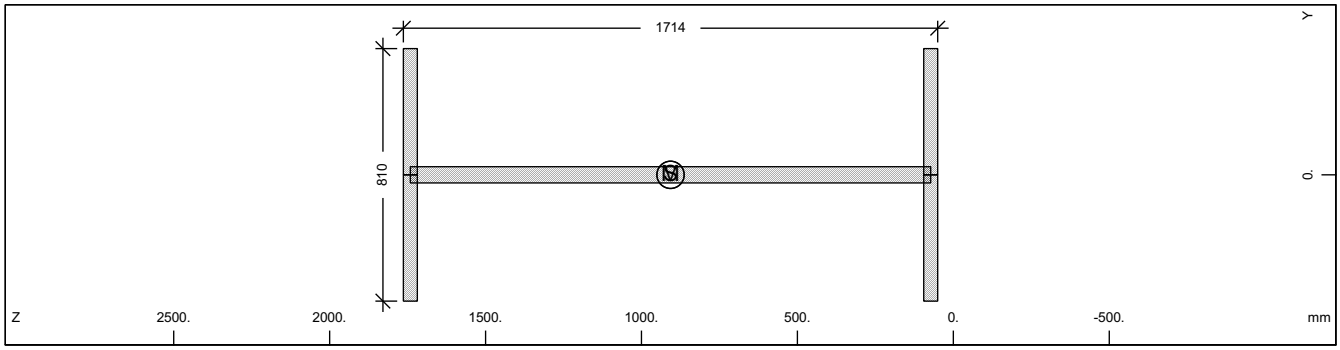

Cross section No. 164

Static properties of cross section

Mat NoR	A[cm2] It[cm4]	Ay/Az/Ayz [cm2]	Iy/Iz/Iyz [cm4]	ys/zs [mm]	modules [N/mm2]	gam [kN/m]
1	1596.73	607.50	7088401.2	0.0	210000	12.53
	6270.0	815.49	398580.9	906.9	80769	

Additional static properties of cross section

Alfa-T [1/°K]	ymin ymax [mm]	zmin zmax [mm]	hymin hzmin [mm]	AK AB [cm2]	MB	Tau-T Tau-B [1/m3]	Tau-Vy Tau-Vz [1/m2]
1.2E-05	-405.0	-856.9		9.424E+02		4.081E+02	2.058E+01
	405.0	856.9				1.255E+02	1.316E+01

Section values for warping

Wmin[cm2]	Wmax[cm2]	CM[cm6]	CMS[cm4]	ASwyy[cm6]	ASwzz[cm6]	ry[mm]	rz[mm]
-3379.12	3379.122774685865.		4229058.7	-1.20	-21.27	0.0	0.0

Design values of cross section

Mat NoR	A[cm2] It[cm4]	Ay/Az/Ayz [cm2]	Iy/Iz/Iyz [cm4]	ys/zs [mm]	modules [N/mm2]	gam [kN/m]
1	1596.73	607.50	7088401.2	0.0	182609	12.53
	6270.0	815.49	398580.9	906.9	70234	

Design forces and moments
(C/E = characteristic plastic/elastic, D=plast.Design, F=elast. Design)

	N[kN]	Vy[kN]	Vz[kN]	Mt[kNm]	My[kNm]	Mz[kNm]	y[mm]	z[mm]	BUCK
C	53490.3	14099.76	16782.87	753.60	32502.88	5323.25	0.0	906.9	c c
C	0.0				0.00	0.00	0.0	0.0	COMB
E	53490.3	9399.84	14695.65	473.93	27713.28	3296.90	0.0	906.9	
D	46513.3	12260.66	14593.80	655.30	28263.38	4628.91	0.0	906.9	
D	0.0				0.00	0.00	0.0	0.0	COMB
F	46513.3	8173.78	12778.83	412.11	24098.51	2866.87	0.0	906.9	

SOFiSTiK AG - www.sofistik.de

Composite bridge 38+50+38, b=14.25m, 2x2HL1100R HISTAR460 , slab 0.30m C30/37

Additional Design Data

M	periphery-O/-I [m2/m]	[m2/m]	deff [mm]	t-min [mm]	t-max [mm]	SMP [o/o]	thet-p [tm2/m]	thet-y [tm2/m]	thet-z [tm2/m]	thet-yz [tm2/m]
	6.577		48.6	45.0	52.0	0.0	0.588	0.556	0.031	

Cross section No. 164.4 = CS 21 - reinf active:C2

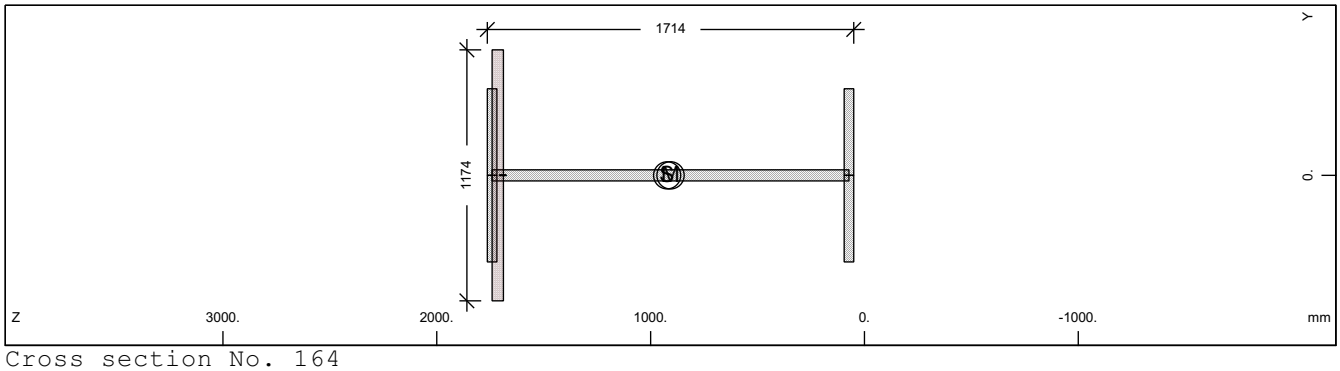

Cross section No. 164

Static properties of cross section

Mat NoR	A[cm2] It[cm4]	Ay/Az/Ayz [cm2]	Iy/Iz/Iyz [cm4]	ys/zs [mm]	modules [N/mm2]	gam [kN/m]
1	1628.88	607.50	7293967.9	0.0	210000	14.09
	6270.0	816.70	398580.9	922.8	80769	

Additional static properties of cross section

Alfa-T [1/°K]	ymin ymax [mm]	zmin zmax [mm]	hymin hzmin [mm]	AK AB [cm2]	MB	Tau-T Tau-B [1/m3]	Tau-Vy Tau-Vz [1/m2]
1.2E-05	-587.0	-872.8		4.476E+02		3.806E+01	2.058E+01
	587.0	840.9		6.209E+02		1.255E+02	1.313E+01

Section values for warping

Wmin[cm2]	Wmax[cm2]	CM[cm6]	CMS[cm4]	ASwyy[cm6]	ASwzz[cm6]	ry[mm]	rz[mm]
-3379.12	3379.12	2774685865.	4229058.7	-1.80	-32.93	0.0	6.4

Partial cross sections

Mat NoR	A[cm2] It[cm4]	Ay/Az/Ayz [cm2]	Iy/Iz/Iyz [cm4]	ys/zs [mm]	modules [N/mm2]	gam [kN/m]
1	1596.73	607.50	7088401.2	0.0	210000	12.53
	12741.8	816.68	398580.9	906.9	80769	
25	620.94		1447.5	0.0	10667	1.55
	2852745.4	0.38	0.0	1714.8	4444	
210	0.64	0.00	0.0	0.0	200000	0.00
	2.2	0.00	0.0	1691.2	76923	

Design values of cross section

Mat NoR	A[cm2] It[cm4]	Ay/Az/Ayz [cm2]	Iy/Iz/Iyz [cm4]	ys/zs [mm]	modules [N/mm2]	gam [kN/m]
1	1621.52	607.50	7247582.9	0.0	182609	14.09
	6270.0	816.69	398580.9	919.2	70234	

Design forces and moments
(C/E = characteristic plastic/elastic, D=plast.Design, F=elast. Design)

	N[kN]	Vy[kN]	Vz[kN]	Mt[kNm]	My[kNm]	Mz[kNm]	y[mm]	z[mm]	BUCK
C	53522.4	14118.33	18269.30	1362.70	32528.09	5597.96	0.8	907.8	c c
C	-523.1				32532.02	0.00	0.0	922.8	COMB
C	-931.4				0.00	5596.87	0.0	0.0	COMB
C	-55385.3	14118.33	18269.30	1362.70	-33981.5	-5596.39	-0.8	961.2	
C	-1339.7				-34007.3	0.00	0.0	922.8	COMB
C	-931.4				0.00	-5596.87	0.0	0.0	COMB
E	54567.4	9399.84	14733.37	433.49	27996.23	3296.90	0.0	922.8	
E	-54567.4	9399.84	14733.37	433.49	-27996.2	-3296.90	0.0	922.8	
D	46541.3	12276.81	15678.47	1062.93	28285.29	4811.86	0.6	907.8	

SOFiSTiK AG - www.sofistik.de

Composite bridge 38+50+38, b=14.25m, 2x2HL1100R HISTAR460 , slab 0.30m C30/37

Design forces and moments
(C/E = characteristic plastic/elastic, D=plast.Design, F=elast. Design)

	N[kN]	Vy[kN]	Vz[kN]	Mt[kNm]	My[kNm]	Mz[kNm]	y[mm]	z[mm]	BUCK
D	-454.9				28288.71	0.00	0.0	922.8	COMB
D	-620.9				0.00	4811.38	0.0	0.0	COMB
D	-47783.1	12276.81	15678.47	1062.93	-29262.0	-4811.09	-0.6	948.8	
D	-787.0				-29272.2	0.00	0.0	922.8	COMB
D	-620.9				0.00	-4811.38	0.0	0.0	COMB
F	47449.9	8173.78	12811.63	288.99	24344.55	2866.87	0.0	922.8	
F	-47449.9	8173.78	12811.63	288.99	-24344.5	-2866.87	0.0	922.8	

Additional Design Data

M	periphery-O/-I [m2/m]	[m2/m]	deff [mm]	t-min [mm]	t-max [mm]	SMP [o/o]	thet-p [tm2/m]	thet-y [tm2/m]	thet-z [tm2/m]	thet-yz [tm2/m]
	6.687		48.7	32.0	52.9	0.0	0.678	0.647	0.031	
1	6.577		48.6	45.0	52.0	0.0	0.588	0.556	0.031	
25	0.106		1174.0			0.0	0.000	0.000		
**	0.004		32.0			0.0	0.000		0.000	

Cross section No. 164.5 = CS 30 - in-situ conc:C3

Cross section No. 165 - VFT (153)

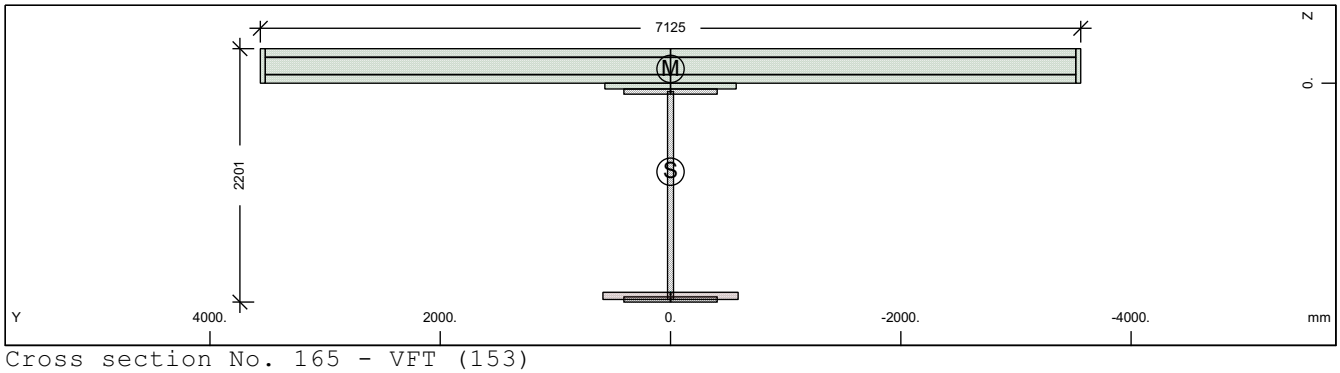

Cross section No. 165 - VFT (153)

Static properties of cross section

Mat NoR	A[cm2] It[cm4]	Ay/Az/Ayz [cm2]	Iy/Iz/Iyz [cm4]	ys/zs [mm]	y/z-sc [mm]	modules [N/mm2]	gam [kN/m]
1	2127.28	366.95	13234064.	0.0	0.0	210000	69.80
	6270.0	551.34	17773731.	768.5	-124.8	80769	

Additional static properties of cross section

Alfa-T [1/°K]	ymin ymax [mm]	zmin zmax [mm]	hymin hzmin [mm]	AK AB [cm2]	MB	Tau-T Tau-B [1/m3]	Tau-Vy Tau-Vz [1/m2]
1.2E-05	-3562.5	-1068.5		5.269E+02		3.234E+01	3.318E+01
	3562.5	1132.8		2.268E+04		1.255E+02	2.516E+01

Section values for warping

Wmin[cm2]	Wmax[cm2]	CM[cm6]	CMS[cm4]	ASwyy[cm6]	ASwzz[cm6]	ry[mm]	rz[mm]
-8114.47	8114.479165746196.		1419224.1	-65.20	-48.55	0.0	781.9

Partial cross sections

Mat NoR	A[cm2] It[cm4]	Ay/Az/Ayz [cm2]	Iy/Iz/Iyz [cm4]	ys/zs [mm]	modules [N/mm2]	gam [kN/m]
1	1668.28	0.11	8500318.3	0.0	210000	13.10
	13386.8	292.68	398580.9	975.7	80769	
25	737.26		2423.0	0.0	10667	1.84
	3387159.5	0.16	0.0	1847.4	4444	
210	0.64	0.00	0.0	0.0	200000	0.00
	2.2	0.00	0.0	1828.8	76923	
31	21945.00	16672.41	170028.4	0.0	0	54.86
	6417251.4	11287.31	904880243.	-145.5	0	

SOFiSTiK AG - www.sofistik.de

Composite bridge 38+50+38, b=14.25m, 2x2HL1100R HISTAR460 , slab 0.30m C30/37

300	441.98	385.18	24861.6	0.0	200000	0.00
	14.5	271.08	18243903.	-150.0	76923	

Design values of cross section

Mat	A[cm2]	Ay/Az/Ayz	Iy/Iz/Iyz	ys/zs	modules	gam
NoR	It[cm4]	[cm2]	[cm4]	[mm]	[N/mm2]	[kN/m]
1	2118.54	366.95	13131902.	0.0	182609	69.80
	6270.0	550.86	17773730.	764.1	70234	

Design forces and moments
(C/E = characteristic plastic/elastic, D=plast.Design, F=elast. Design)

	N[kN]	Vy[kN]	Vz[kN]	Mt[kNm]	My[kNm]	Mz[kNm]	y[mm]	z[mm]	BUCK
C	78018.9	63086.54	48645.73	100098.4	66037.83	101538.6	32.0	-38.4	c c
C	-80685.0				117516.7	0.00	0.0	768.5	COMB
C	-34023.4				0.00	101917.5	0.0	0.0	COMB
C	-140843.	63086.54	48645.73	100098.4	-57439.9	-101468.	-32.0	405.9	
C	12638.2				-59732.1	0.00	0.0	768.5	COMB
C	-34023.4				0.00	-101918.	0.0	0.0	COMB
E	71264.0	8701.10	11473.69	510.28	39136.52	26516.82	0.0	768.5	
E	-71264.0	8701.10	11473.69	510.28	-39136.5	-26516.8	0.0	768.5	
D	67842.5	47511.06	36746.47	66911.61	56164.95	76721.05	20.3	-73.9	
D	-56803.0				89979.84	0.00	0.0	768.5	COMB
D	-22682.3				0.00	76920.82	0.0	0.0	COMB
D	-109725.	47511.06	36746.46	66911.59	-49297.4	-76691.2	-20.3	391.1	
D	11438.5				-51456.8	0.00	0.0	768.5	COMB
D	-22682.3				0.00	-76920.8	0.0	0.0	COMB
F	61968.7	7566.18	9977.12	340.19	34031.76	23058.11	0.0	768.5	
F	-61968.7	7566.18	9977.12	340.19	-34031.8	-23058.1	0.0	768.5	

Additional Design Data

M	periphery-O/-I		deff	t-min	t-max	SMP	thet-p	thet-y	thet-z	thet-yz
	[m2/m]	[m2/m]	[mm]	[mm]	[mm]	[o/o]	[tm2/m]	[tm2/m]	[tm2/m]	[tm2/m]
	51.664		8.2	3.1	300.0	0.0	25.220	2.567	22.653	
1	6.853		48.7	45.0	52.0	0.0	0.699	0.667	0.031	
25	0.126		1174.0			0.0	0.000	0.000		
**	0.004		32.0			0.0	0.000		0.000	
31	16.530		265.5	50.0	300.0	0.0	22.626	0.004	22.622	
**	28.152		3.1	3.1	3.1	0.0	0.000	0.000	0.000	

Cross section No. 165.1 = CS 1 - steel alone

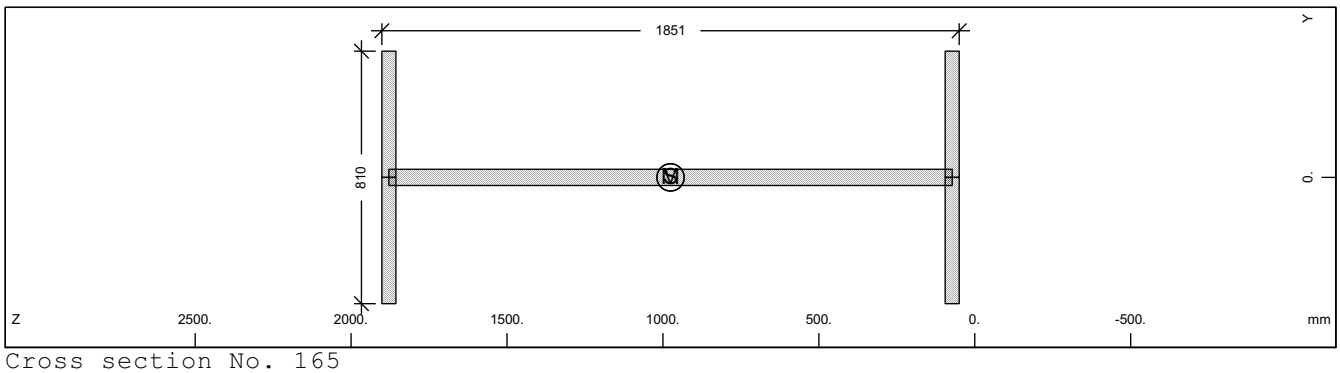

Cross section No. 165

Static properties of cross section

Mat	A[cm2]	Ay/Az/Ayz	Iy/Iz/Iyz	ys/zs	modules	gam
NoR	It[cm4]	[cm2]	[cm4]	[mm]	[N/mm2]	[kN/m]
1	1668.28	607.50	8500318.3	0.0	210000	13.10
	6270.0	885.85	398580.9	975.7	80769	

SOFiSTiK AG - www.sofistik.de

Composite bridge 38+50+38, b=14.25m, 2x2HL1100R HISTAR460 , slab 0.30m C30/37

Additional static properties of cross section

Alfa-T	ymin ymax	zmin zmax	hymin hzmin	AK AB	MB	Tau-T Tau-B	Tau-Vy Tau-Vz
[1/°K]	[mm]	[mm]	[mm]	[cm2]		[1/m3]	[1/m2]
1.2E-05	-405.0	-925.7		9.902E+02		3.884E+02	2.058E+01
	405.0	925.7				1.255E+02	1.225E+01

Section values for warping

Wmin[cm2]	Wmax[cm2]	CM[cm6]	CMS[cm4]	ASwyy[cm6]	ASwzz[cm6]	ry[mm]	rz[mm]
-3657.79	3657.793251204746.		4955348.4	-0.89	-18.99	0.0	0.0

Design values of cross section

Mat NoR	A[cm2] It[cm4]	Ay/Az/Ayz [cm2]	Iy/Iz/Iyz [cm4]	ys/zs [mm]	modules [N/mm2]	gam [kN/m]
1	1668.28	607.50	8500318.3	0.0	182609	13.10
	6270.0	885.85	398580.9	975.7	70234	

Design forces and moments
(C/E = characteristic plastic/elastic, D=plast.Design, F=elast. Design)

	N[kN]	Vy[kN]	Vz[kN]	Mt[kNm]	My[kNm]	Mz[kNm]	y[mm]	z[mm]	BUCK
C	55887.5	14099.76	18166.93	789.58	36265.89	5354.41	0.0	975.7	c c
C	0.0				0.00	0.00	0.0	0.0	COMB
E	55887.5	9399.84	15794.25	497.92	30763.04	3296.90	0.0	975.7	
D	48597.9	12260.66	15797.33	686.60	31535.56	4656.01	0.0	975.7	
D	0.0				0.00	0.00	0.0	0.0	COMB
F	48597.9	8173.78	13734.13	432.97	26750.47	2866.87	0.0	975.7	

Additional Design Data

M	periphery-O/-I [m2/m]	[m2/m]	deff [mm]	t-min [mm]	t-max [mm]	SMP [o/o]	thet-p [tm2/m]	thet-y [tm2/m]	thet-z [tm2/m]	thet-yz [tm2/m]
	6.853		48.7	45.0	52.0	0.0	0.699	0.667	0.031	

Cross section No. 165.2 = CS 10 - prefab. slab C1

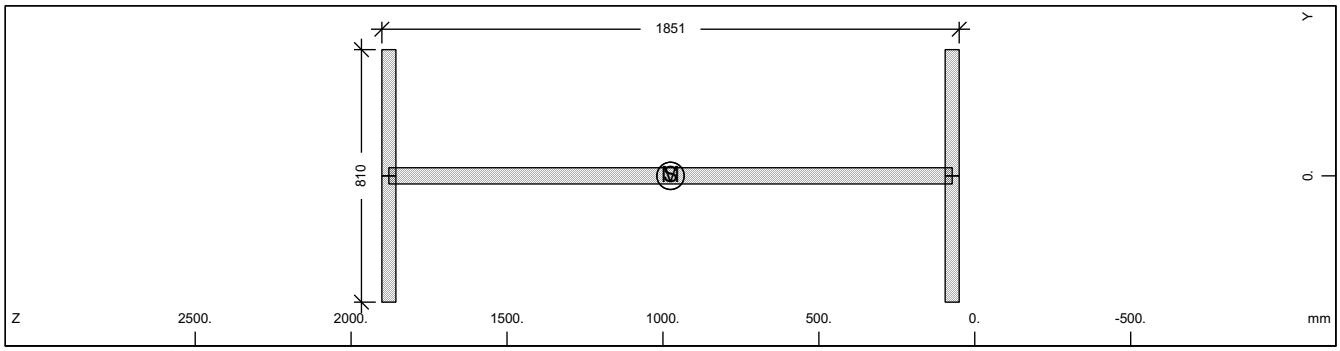

Cross section No. 165

Static properties of cross section

Mat NoR	A[cm2] It[cm4]	Ay/Az/Ayz [cm2]	Iy/Iz/Iyz [cm4]	ys/zs [mm]	modules [N/mm2]	gam [kN/m]
1	1668.28	607.50	8500318.3	0.0	210000	13.10
	6270.0	885.85	398580.9	975.7	80769	

Additional static properties of cross section

Alfa-T	ymin ymax	zmin zmax	hymin hzmin	AK AB	MB	Tau-T Tau-B	Tau-Vy Tau-Vz
[1/°K]	[mm]	[mm]	[mm]	[cm2]		[1/m3]	[1/m2]
1.2E-05	-405.0	-925.7		9.902E+02		3.884E+02	2.058E+01
	405.0	925.7				1.255E+02	1.225E+01

Section values for warping

Wmin[cm2]	Wmax[cm2]	CM[cm6]	CMS[cm4]	ASwyy[cm6]	ASwzz[cm6]	ry[mm]	rz[mm]
-3657.79	3657.793251204746.		4955348.4	-0.89	-18.99	0.0	0.0

SOFiSTiK AG - www.sofistik.de

Composite bridge 38+50+38, b=14.25m, 2x2HL1100R HISTAR460 , slab 0.30m C30/37

Design values of cross section

Mat NoR	A[cm2] It[cm4]	Ay/Az/Ayz [cm2]	Iy/Iz/Iyz [cm4]	ys/zs [mm]	modules [N/mm2]	gam [kN/m]
1	1668.28	607.50	8500318.3	0.0	182609	13.10
	6270.0	885.85	398580.9	975.7	70234	

Design forces and moments
(C/E = characteristic plastic/elastic, D=plast.Design, F=elast. Design)

	N[kN]	Vy[kN]	Vz[kN]	Mt[kNm]	My[kNm]	Mz[kNm]	y[mm]	z[mm]	BUCK
C	55887.5	14099.76	18166.93	789.58	36265.89	5354.41	0.0	975.7	c c
C	0.0				0.00	0.00	0.0	0.0	COMB
E	55887.5	9399.84	15794.25	497.92	30763.04	3296.90	0.0	975.7	
D	48597.9	12260.66	15797.33	686.60	31535.56	4656.01	0.0	975.7	
D	0.0				0.00	0.00	0.0	0.0	COMB
F	48597.9	8173.78	13734.13	432.97	26750.47	2866.87	0.0	975.7	

Additional Design Data

M	periphery-O/-I [m2/m] [m2/m]	deff [mm]	t-min [mm]	t-max [mm]	SMP [o/o]	thet-p [tm2/m]	thet-y [tm2/m]	thet-z [tm2/m]	thet-yz [tm2/m]
	6.853	48.7	45.0	52.0	0.0	0.699	0.667	0.031	

Cross section No. 165.3 = CS 20 - in-situ conc:C2

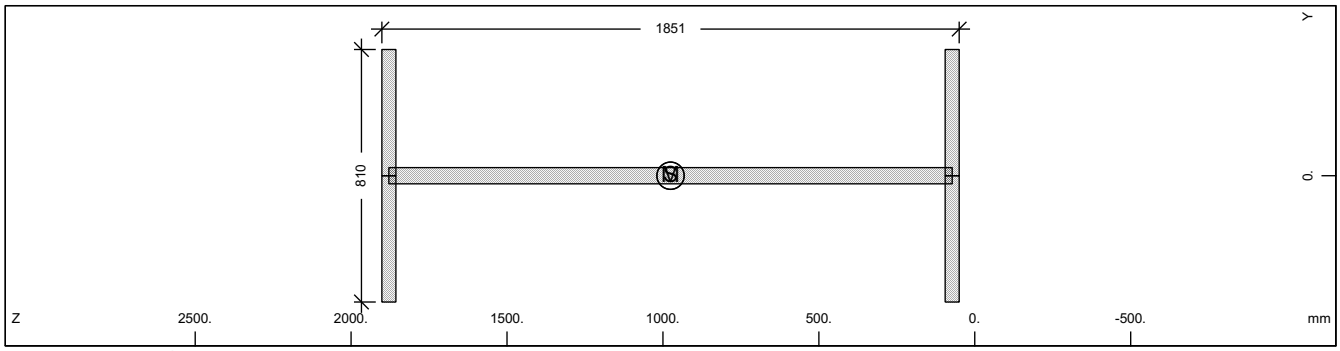

Cross section No. 165

Static properties of cross section

Mat NoR	A[cm2] It[cm4]	Ay/Az/Ayz [cm2]	Iy/Iz/Iyz [cm4]	ys/zs [mm]	modules [N/mm2]	gam [kN/m]
1	1668.28	607.50	8500318.3	0.0	210000	13.10
	6270.0	885.85	398580.9	975.7	80769	

Additional static properties of cross section

Alfa-T [1/°K]	ymin ymax [mm]	zmin zmax [mm]	hymin hzmin [mm]	AK AB [cm2]	MB	Tau-T Tau-B [1/m3]	Tau-Vy Tau-Vz [1/m2]
1.2E-05	-405.0	-925.7		9.902E+02		3.884E+02	2.058E+01
	405.0	925.7				1.255E+02	1.225E+01

Section values for warping

Wmin[cm2]	Wmax[cm2]	CM[cm6]	CMS[cm4]	ASwyy[cm6]	ASwzz[cm6]	ry[mm]	rz[mm]
-3657.79	3657.793251204746.		4955348.4	-0.89	-18.99	0.0	0.0

Design values of cross section

Mat NoR	A[cm2] It[cm4]	Ay/Az/Ayz [cm2]	Iy/Iz/Iyz [cm4]	ys/zs [mm]	modules [N/mm2]	gam [kN/m]
1	1668.28	607.50	8500318.3	0.0	182609	13.10
	6270.0	885.85	398580.9	975.7	70234	

Design forces and moments
(C/E = characteristic plastic/elastic, D=plast.Design, F=elast. Design)

	N[kN]	Vy[kN]	Vz[kN]	Mt[kNm]	My[kNm]	Mz[kNm]	y[mm]	z[mm]	BUCK
C	55887.5	14099.76	18166.93	789.58	36265.89	5354.41	0.0	975.7	c c
C	0.0				0.00	0.00	0.0	0.0	COMB
E	55887.5	9399.84	15794.25	497.92	30763.04	3296.90	0.0	975.7	

SOFiSTiK AG - www.sofistik.de

Composite bridge 38+50+38, b=14.25m, 2x2HL1100R HISTAR460 , slab 0.30m C30/37

Design forces and moments
(C/E = characteristic plastic/elastic, D=plast.Design, F=elast. Design)

	N[kN]	Vy[kN]	Vz[kN]	Mt[kNm]	My[kNm]	Mz[kNm]	y[mm]	z[mm]	BUCK
D	48597.9	12260.66	15797.33	686.60	31535.56	4656.01	0.0	975.7	
D	0.0				0.00	0.00	0.0	0.0	COMB
F	48597.9	8173.78	13734.13	432.97	26750.47	2866.87	0.0	975.7	

Additional Design Data

M	periphery-O/-I [m2/m]	[m2/m]	deff [mm]	t-min [mm]	t-max [mm]	SMP [o/o]	thet-p [tm2/m]	thet-y [tm2/m]	thet-z [tm2/m]	thet-yz [tm2/m]
	6.853		48.7	45.0	52.0	0.0	0.699	0.667	0.031	

Cross section No. 165.4 = CS 21 - reinf active:C2

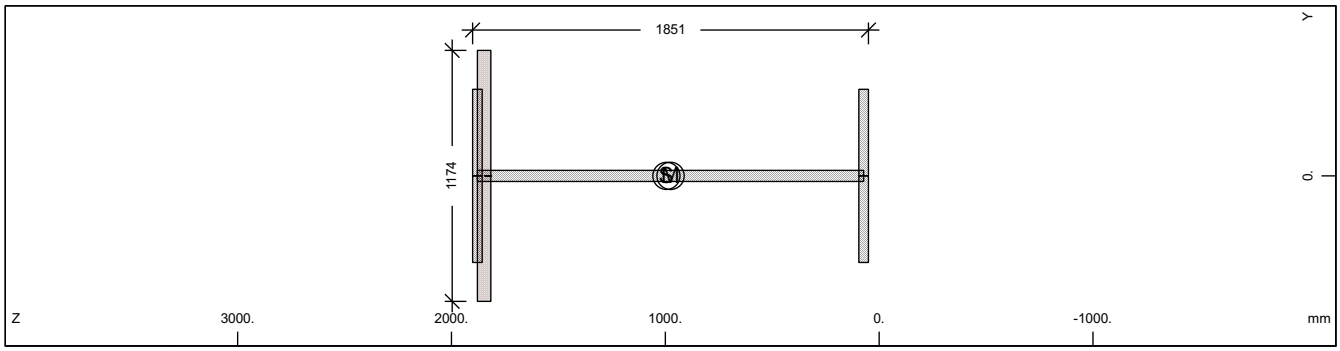

Cross section No. 165

Static properties of cross section

Mat NoR	A[cm2] It[cm4]	Ay/Az/Ayz [cm2]	Iy/Iz/Iyz [cm4]	ys/zs [mm]	modules [N/mm2]	gam [kN/m]
1	1706.35	607.50	8783044.0	0.0	210000	14.94
	6270.0	886.97	398580.9	995.1	80769	

Additional static properties of cross section

Alfa-T [1/°K]	ymin ymax [mm]	zmin zmax [mm]	hymin hzmin [mm]	AK AB [cm2]	MB	Tau-T Tau-B [1/m3]	Tau-Vy Tau-Vz [1/m2]
1.2E-05	-587.0	-945.1		5.268E+02		3.234E+01	2.058E+01
	587.0	906.2		7.373E+02		1.255E+02	1.221E+01

Section values for warping

Wmin[cm2]	Wmax[cm2]	CM[cm6]	CMS[cm4]	ASwyy[cm6]	ASwzz[cm6]	ry[mm]	rz[mm]
-3657.79	3657.793251204746.		4955348.4	-3.09	-68.13	0.0	8.4

Partial cross sections

Mat NoR	A[cm2] It[cm4]	Ay/Az/Ayz [cm2]	Iy/Iz/Iyz [cm4]	ys/zs [mm]	modules [N/mm2]	gam [kN/m]
1	1668.28	607.50	8500318.3	0.0	210000	13.10
	13386.8	886.93	398580.9	975.7	80769	
25	737.26		2423.0	0.0	10667	1.84
	3387159.5	0.60	0.0	1847.4	4444	
210	0.64	0.00	0.0	0.0	200000	0.00
	2.2	0.00	0.0	1828.8	76923	

Design values of cross section

Mat NoR	A[cm2] It[cm4]	Ay/Az/Ayz [cm2]	Iy/Iz/Iyz [cm4]	ys/zs [mm]	modules [N/mm2]	gam [kN/m]
1	1697.61	607.50	8719211.9	0.0	182609	14.94
	6270.0	886.96	398580.9	990.7	70234	

Design forces and moments
(C/E = characteristic plastic/elastic, D=plast.Design, F=elast. Design)

	N[kN]	Vy[kN]	Vz[kN]	Mt[kNm]	My[kNm]	Mz[kNm]	y[mm]	z[mm]	BUCK
C	55919.7	14118.33	19845.29	1511.34	36293.31	5680.71	0.9	976.6	c c
C	-645.1				36299.29	0.00	0.0	995.1	COMB

SOFiSTiK AG - www.sofistik.de

Composite bridge 38+50+38, b=14.25m, 2x2HL1100R HISTAR460 , slab 0.30m C30/37

Design forces and moments
(C/E = characteristic plastic/elastic, D=plast.Design, F=elast. Design)

	N[kN]	Vy[kN]	Vz[kN]	Mt[kNm]	My[kNm]	Mz[kNm]	y[mm]	z[mm]	BUCK
C	-1105.9				0.00	5679.25	0.0	0.0	COMB
C	-58131.5	14118.33	19845.29	1511.34	-38149.2	-5678.65	-0.9	1040.	
C	-1566.7				-38184.4	0.00	0.0	995.1	COMB
C	-1105.9				0.00	-5679.25	0.0	0.0	COMB
E	57162.6	9399.84	15842.15	510.25	31132.47	3296.90	0.0	995.1	
E	-57162.6	9399.84	15842.15	510.25	-31132.5	-3296.90	0.0	995.1	
D	48625.8	12276.81	17009.95	1169.33	31559.40	4873.29	0.7	976.6	
D	-560.9				31564.60	0.00	0.0	995.1	COMB
D	-737.3				0.00	4872.62	0.0	0.0	COMB
D	-50100.3	12276.81	17009.95	1169.33	-32807.6	-4872.27	-0.7	1025.	
D	-913.6				-32821.4	0.00	0.0	995.1	COMB
D	-737.3				0.00	-4872.62	0.0	0.0	COMB
F	49706.6	8173.78	13775.78	340.16	27071.71	2866.87	0.0	995.1	
F	-49706.6	8173.78	13775.78	340.16	-27071.7	-2866.87	0.0	995.1	

Additional Design Data

M	periphery-O/-I [m2/m]	[m2/m]	deff [mm]	t-min [mm]	t-max [mm]	SMP [o/o]	thet-p [tm2/m]	thet-y [tm2/m]	thet-z [tm2/m]	thet-yz [tm2/m]
	6.982		48.9	32.0	62.8	0.0	0.821	0.790	0.031	
1	6.853		48.7	45.0	52.0	0.0	0.699	0.667	0.031	
25	0.126		1174.0			0.0	0.000	0.000		
**	0.004		32.0			0.0	0.000		0.000	

Cross section No. 165.5 = CS 30 - in-situ conc:C3

Cross section No. 166 - VFT (153)

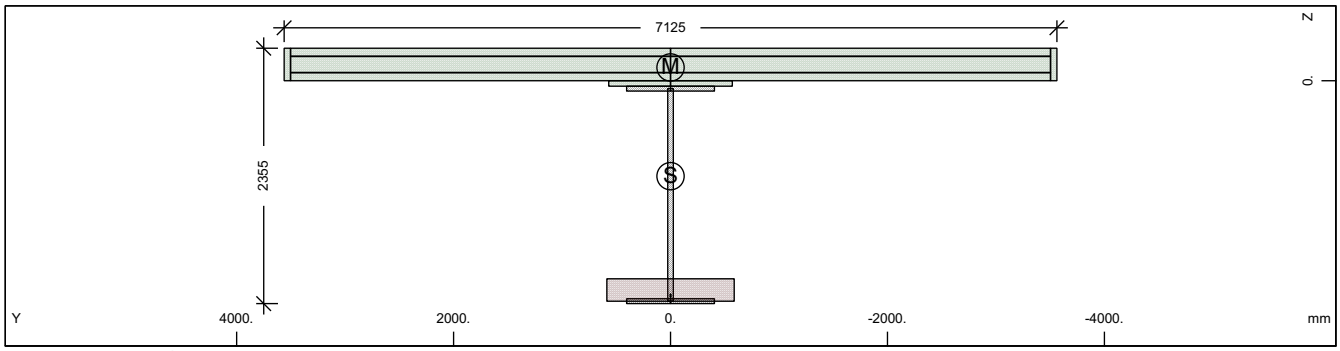

Cross section No. 166 - VFT (153)

Static properties of cross section

Mat NoR	A[cm2] It[cm4]	Ay/Az/Ayz [cm2]	Iy/Iz/Iyz [cm4]	ys/zs [mm]	y/z-sc [mm]	modules [N/mm2]	gam [kN/m]
1	2291.25	365.52	16629827.	0.0	0.0	210000	74.65
	6270.0	634.31	17540744.	880.2	-122.7	80769	

Additional static properties of cross section

Alfa-T [1/°K]	ymin ymax [mm]	zmin zmax [mm]	hymin hzmin [mm]	AK AB [cm2]	MB	Tau-T Tau-B [1/m3]	Tau-Vy Tau-Vz [1/m2]
1.2E-05	-3562.5	-1180.2		1.653E+03		1.030E+01	3.332E+01
	3562.5	1175.3		2.437E+04		1.255E+02	2.217E+01

Section values for warping

Wmin[cm2]	Wmax[cm2]	CM[cm6]	CMS[cm4]	ASwyy[cm6]	ASwzz[cm6]	ry[mm]	rz[mm]
-8730.43	8730.43	1.043E+10	1820461.6	-154.89	-146.85	0.0	1080.1

SOFiSTiK AG - www.sofistik.de

Composite bridge 38+50+38, b=14.25m, 2x2HL1100R HISTAR460 , slab 0.30m C30/37

Partial cross sections

Mat NoR	A[cm2] It[cm4]	Ay/Az/Ayz [cm2]	Iy/Iz/Iyz [cm4]	ys/zs [mm]	modules [N/mm2]	gam [kN/m]
1	1748.46	0.11	10270093.	0.0	210000	13.73
	14109.4	365.35	398580.9	1052.7	80769	
25	2424.22		86138.9	0.0	10667	6.06
	11137486.	4.48	0.0	1929.7	4444	
210	0.64	0.00	0.0	0.0	200000	0.00
	2.2	0.00	0.0	1983.0	76923	
31	21945.00	16985.34	170028.4	0.0	0	54.86
	6417251.4	11901.65	904880243.	-145.5	0	
300	440.00	383.68	24750.0	0.0	200000	0.00
	14.5	281.63	17999266.	-150.0	76923	

Design values of cross section

Mat NoR	A[cm2] It[cm4]	Ay/Az/Ayz [cm2]	Iy/Iz/Iyz [cm4]	ys/zs [mm]	modules [N/mm2]	gam [kN/m]
1	2262.52	365.52	16308269.	0.0	182609	74.65
	6270.0	633.75	17540743.	866.8	70234	

Design forces and moments
(C/E = characteristic plastic/elastic, D=plast.Design, F=elast. Design)

	N[kN]	Vy[kN]	Vz[kN]	Mt[kNm]	My[kNm]	Mz[kNm]	y[mm]	z[mm]	BUCK
C	80605.4	63029.25	52979.83	101772.5	73306.23	102075.7	28.4	-129.	c c
C	-81789.8				131416.5	0.00	0.0	880.2	COMB
C	-36553.8				0.00	102346.7	0.0	0.0	COMB
C	-146594.	63029.25	52979.83	101772.5	-70446.9	-101869.	-28.5	631.1	
C	8682.1				-71528.7	0.00	0.0	880.2	COMB
C	-36553.8				0.00	-102347.	0.0	0.0	COMB
E	76756.9	8664.68	13019.70	1601.40	47399.12	26287.25	0.0	880.2	
E	-76756.9	8664.68	13019.70	1601.40	-47399.1	-26287.3	0.0	880.2	
D	70091.6	47461.25	39950.48	68035.85	62539.70	76996.00	20.1	-73.5	
D	-57763.7				100575.3	0.00	0.0	880.2	COMB
D	-24369.2				0.00	77143.37	0.0	0.0	COMB
D	-114084.	47461.25	39950.48	68035.86	-59305.8	-76898.6	-20.1	582.3	
D	9025.3				-60650.1	0.00	0.0	880.2	COMB
D	-24369.2				0.00	-77143.4	0.0	0.0	COMB
F	66745.1	7534.50	11321.47	1067.60	41216.63	22858.48	0.0	880.2	
F	-66745.1	7534.50	11321.47	1067.60	-41216.6	-22858.5	0.0	880.2	

Additional Design Data

M	periphery-O/-I [m2/m]	[m2/m]	deff [mm]	t-min [mm]	t-max [mm]	SMP [o/o]	thet-p [tm2/m]	thet-y [tm2/m]	thet-z [tm2/m]	thet-yz [tm2/m]
	52.133		8.8	3.1	300.0	0.0	26.918	4.265	22.653	
1	7.161		48.8	45.0	52.0	0.0	0.837	0.806	0.031	
25	0.413		1174.0			0.0	0.002	0.002		
**	0.004		32.0			0.0	0.000	0.000	0.000	
31	16.530		265.5	50.0	300.0	0.0	22.626	0.004	22.622	
**	28.025		3.1	3.1	3.1	0.0	0.000	0.000	0.000	

SOFiSTiK AG - www.sofistik.de

Composite bridge 38+50+38, b=14.25m, 2x2HL1100R HISTAR460 , slab 0.30m C30/37

Cross section No. 166.1 = CS 1 - steel alone

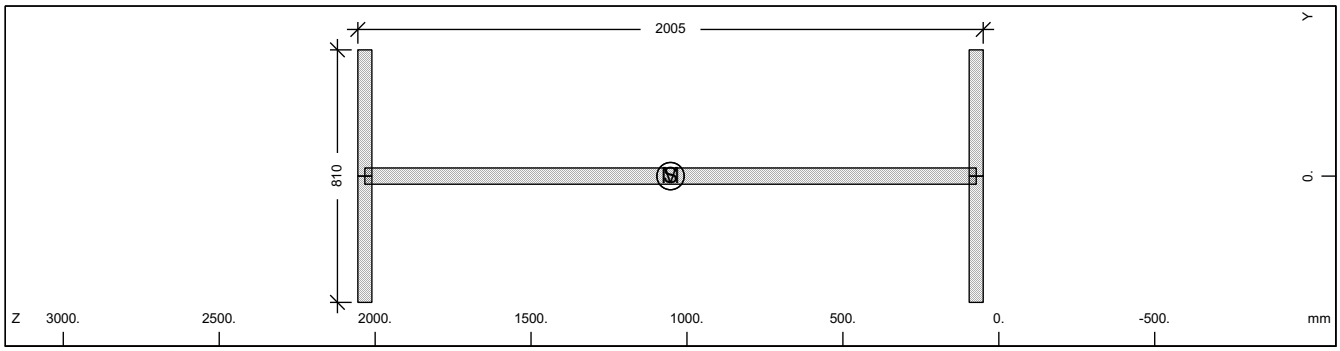

Cross section No. 166

Static properties of cross section

Mat NoR	A[cm2] It[cm4]	Ay/Az/Ayz [cm2]	Iy/Iz/Iyz [cm4]	ys/zs [mm]	modules [N/mm2]	gam [kN/m]
1	1748.46	607.50	10270093.	0.0	210000	13.73
	6270.0	964.27	398580.9	1052.7	80769	

Additional static properties of cross section

Alfa-T [1/°K]	ymin ymax [mm]	zmin zmax [mm]	hymin hzmin [mm]	AK AB [cm2]	MB	Tau-T Tau-B [1/m3]	Tau-Vy Tau-Vz [1/m2]
1.2E-05	-405.0	-1002.7		1.044E+03		3.685E+02	2.058E+01
	405.0	1002.7				1.255E+02	1.137E+01

Section values for warping

Wmin[cm2]	Wmax[cm2]	CM[cm6]	CMS[cm4]	ASwyy[cm6]	ASwzz[cm6]	ry[mm]	rz[mm]
-3970.00	3970.00	3829894137.	5837362.7	-1.23	-31.68	0.0	0.0

Design values of cross section

Mat NoR	A[cm2] It[cm4]	Ay/Az/Ayz [cm2]	Iy/Iz/Iyz [cm4]	ys/zs [mm]	modules [N/mm2]	gam [kN/m]
1	1748.46	607.50	10270093.	0.0	182609	13.73
	6270.0	964.27	398580.9	1052.7	70234	

Design forces and moments
(C/E = characteristic plastic/elastic, D=plast.Design, F=elast. Design)

	N[kN]	Vy[kN]	Vz[kN]	Mt[kNm]	My[kNm]	Mz[kNm]	y[mm]	z[mm]	BUCK
C	58573.3	14099.76	19717.54	829.90	40677.66	5389.33	0.0	1053.	c c
C	0.0				0.00	0.00	0.0	0.0	COMB
E	58573.3	9399.84	17012.99	524.80	34310.59	3296.90	0.0	1053.	
D	50933.3	12260.66	17145.69	721.65	35371.88	4686.37	0.0	1053.	
D	0.0				0.00	0.00	0.0	0.0	COMB
F	50933.3	8173.78	14793.91	456.34	29835.29	2866.87	0.0	1053.	

Additional Design Data

M	periphery-O/-I [m2/m] [m2/m]	deff [mm]	t-min [mm]	t-max [mm]	SMP [o/o]	thet-p [tm2/m]	thet-y [tm2/m]	thet-z [tm2/m]	thet-yz [tm2/m]
	7.161	48.8	45.0	52.0	0.0	0.837	0.806	0.031	

SOFiSTiK AG - www.sofistik.de

Composite bridge 38+50+38, b=14.25m, 2x2HL1100R HISTAR460 , slab 0.30m C30/37

Cross section No. 166.2 = CS 10 - prefab. slab C1

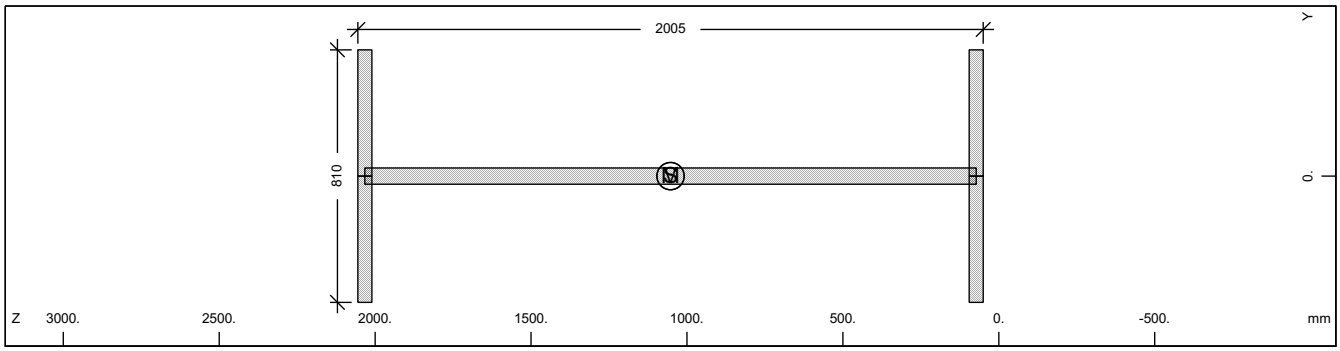

Cross section No. 166

Static properties of cross section

Mat NoR	A[cm2] It[cm4]	Ay/Az/Ayz [cm2]	Iy/Iz/Iyz [cm4]	ys/zs [mm]	modules [N/mm2]	gam [kN/m]
1	1748.46	607.50	10270093.	0.0	210000	13.73
	6270.0	964.27	398580.9	1052.7	80769	

Additional static properties of cross section

Alfa-T [1/°K]	ymin ymax [mm]	zmin zmax [mm]	hymin hzmin [mm]	AK AB [cm2]	MB	Tau-T Tau-B [1/m3]	Tau-Vy Tau-Vz [1/m2]
1.2E-05	-405.0	-1002.7		1.044E+03		3.685E+02	2.058E+01
	405.0	1002.7				1.255E+02	1.137E+01

Section values for warping

Wmin[cm2]	Wmax[cm2]	CM[cm6]	CMS[cm4]	ASwyy[cm6]	ASwzz[cm6]	ry[mm]	rz[mm]
-3970.00	3970.00	3829894137.	5837362.7	-1.23	-31.68	0.0	0.0

Design values of cross section

Mat NoR	A[cm2] It[cm4]	Ay/Az/Ayz [cm2]	Iy/Iz/Iyz [cm4]	ys/zs [mm]	modules [N/mm2]	gam [kN/m]
1	1748.46	607.50	10270093.	0.0	182609	13.73
	6270.0	964.27	398580.9	1052.7	70234	

Design forces and moments
(C/E = characteristic plastic/elastic, D=plast.Design, F=elast. Design)

	N[kN]	Vy[kN]	Vz[kN]	Mt[kNm]	My[kNm]	Mz[kNm]	y[mm]	z[mm]	BUCK
C	58573.3	14099.76	19717.54	829.90	40677.66	5389.33	0.0	1053.	c c
C	0.0				0.00	0.00	0.0	0.0	COMB
E	58573.3	9399.84	17012.99	524.80	34310.59	3296.90	0.0	1053.	
D	50933.3	12260.66	17145.69	721.65	35371.88	4686.37	0.0	1053.	
D	0.0				0.00	0.00	0.0	0.0	COMB
F	50933.3	8173.78	14793.91	456.34	29835.29	2866.87	0.0	1053.	

Additional Design Data

M	periphery-O/-I [m2/m] [m2/m]	deff [mm]	t-min [mm]	t-max [mm]	SMP [o/o]	thet-p [tm2/m]	thet-y [tm2/m]	thet-z [tm2/m]	thet-yz [tm2/m]
	7.161	48.8	45.0	52.0	0.0	0.837	0.806	0.031	

SOFiSTiK AG - www.sofistik.de

Composite bridge 38+50+38, b=14.25m, 2x2HL1100R HISTAR460 , slab 0.30m C30/37

Cross section No. 166.3 = CS 20 - in-situ conc:C2

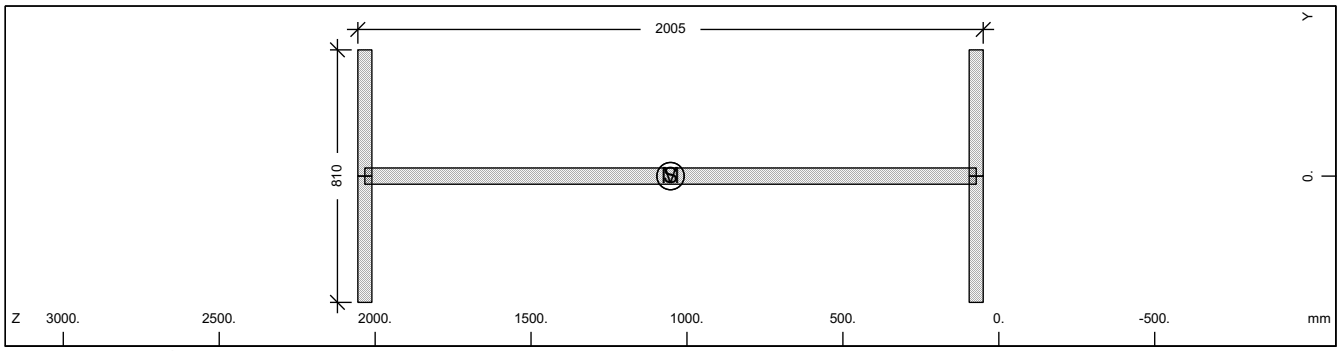

Cross section No. 166

Static properties of cross section

Mat NoR	A[cm2] It[cm4]	Ay/Az/Ayz [cm2]	Iy/Iz/Iyz [cm4]	ys/zs [mm]	modules [N/mm2]	gam [kN/m]
1	1748.46	607.50	10270093.	0.0	210000	13.73
	6270.0	964.27	398580.9	1052.7	80769	

Additional static properties of cross section

Alfa-T [1/°K]	ymin ymax [mm]	zmin zmax [mm]	hymin hzmin [mm]	AK AB [cm2]	MB	Tau-T Tau-B [1/m3]	Tau-Vy Tau-Vz [1/m2]
1.2E-05	-405.0	-1002.7		1.044E+03		3.685E+02	2.058E+01
	405.0	1002.7				1.255E+02	1.137E+01

Section values for warping

Wmin[cm2]	Wmax[cm2]	CM[cm6]	CMS[cm4]	ASwyy[cm6]	ASwzz[cm6]	ry[mm]	rz[mm]
-3970.00	3970.00	3829894137.	5837362.7	-1.23	-31.68	0.0	0.0

Design values of cross section

Mat NoR	A[cm2] It[cm4]	Ay/Az/Ayz [cm2]	Iy/Iz/Iyz [cm4]	ys/zs [mm]	modules [N/mm2]	gam [kN/m]
1	1748.46	607.50	10270093.	0.0	182609	13.73
	6270.0	964.27	398580.9	1052.7	70234	

Design forces and moments
(C/E = characteristic plastic/elastic, D=plast.Design, F=elast. Design)

	N[kN]	Vy[kN]	Vz[kN]	Mt[kNm]	My[kNm]	Mz[kNm]	y[mm]	z[mm]	BUCK
C	58573.3	14099.76	19717.54	829.90	40677.66	5389.33	0.0	1053.	c c
C	0.0				0.00	0.00	0.0	0.0	COMB
E	58573.3	9399.84	17012.99	524.80	34310.59	3296.90	0.0	1053.	
D	50933.3	12260.66	17145.69	721.65	35371.88	4686.37	0.0	1053.	
D	0.0				0.00	0.00	0.0	0.0	COMB
F	50933.3	8173.78	14793.91	456.34	29835.29	2866.87	0.0	1053.	

Additional Design Data

M	periphery-O/-I [m2/m] [m2/m]	deff [mm]	t-min [mm]	t-max [mm]	SMP [o/o]	thet-p [tm2/m]	thet-y [tm2/m]	thet-z [tm2/m]	thet-yz [tm2/m]
	7.161	48.8	45.0	52.0	0.0	0.837	0.806	0.031	

SOFiSTiK AG - www.sofistik.de

Composite bridge 38+50+38, b=14.25m, 2x2HL1100R HISTAR460 , slab 0.30m C30/37

Cross section No. 166.4 = CS 21 - reinf active:C2

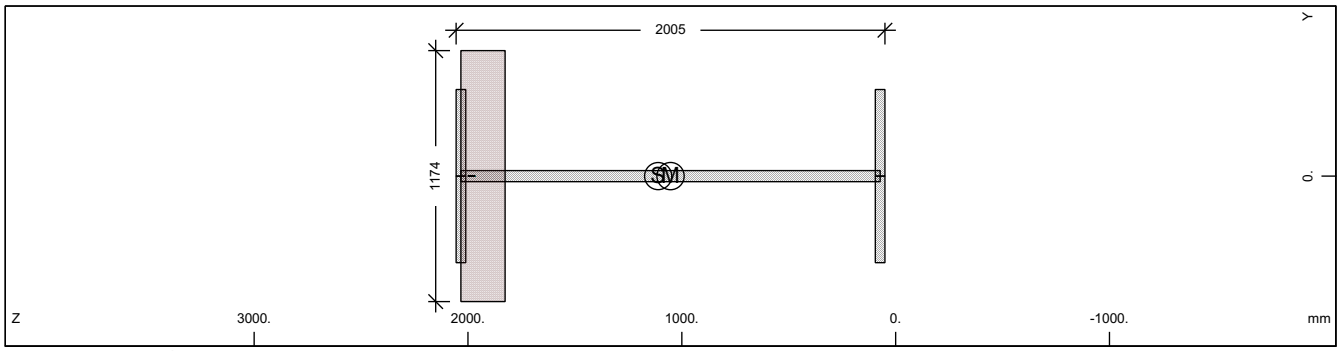

Cross section No. 166

Static properties of cross section

Mat NoR	A[cm2] It[cm4]	Ay/Az/Ayz [cm2]	Iy/Iz/Iyz [cm4]	ys/zs [mm]	modules [N/mm2]	gam [kN/m]
1	1872.20	607.50	11163888.	0.0	210000	19.79
	6270.0	954.30	398580.9	1110.7	80769	

Additional static properties of cross section

Alfa-T [1/°K]	ymin ymax [mm]	zmin zmax [mm]	hymin hzmin [mm]	AK AB [cm2]	MB	Tau-T Tau-B [1/m3]	Tau-Vy Tau-Vz [1/m2]
1.2E-05	-587.0	-1060.7		1.653E+03		1.030E+01	2.058E+01
	587.0	944.8		2.424E+03		1.255E+02	1.135E+01

Section values for warping

Wmin[cm2]	Wmax[cm2]	CM[cm6]	CMS[cm4]	ASwyy[cm6]	ASwzz[cm6]	ry[mm]	rz[mm]
-3970.00	3970.00	3829894137.	5837362.7	-2.40	-67.29	0.0	15.5

Partial cross sections

Mat NoR	A[cm2] It[cm4]	Ay/Az/Ayz [cm2]	Iy/Iz/Iyz [cm4]	ys/zs [mm]	modules [N/mm2]	gam [kN/m]
1	1748.46	607.50	10270093.	0.0	210000	13.73
	14109.4	953.56	398580.9	1052.7	80769	
25	2424.22		86138.9	0.0	10667	6.06
	11137486.	13.51	0.0	1929.7	4444	
210	0.64	0.00	0.0	0.0	200000	0.00
	2.2	0.00	0.0	1983.0	76923	

Design values of cross section

Mat NoR	A[cm2] It[cm4]	Ay/Az/Ayz [cm2]	Iy/Iz/Iyz [cm4]	ys/zs [mm]	modules [N/mm2]	gam [kN/m]
1	1843.47	607.50	10967136.	0.0	182609	19.79
	6270.0	954.13	398580.9	1098.0	70234	

Design forces and moments
(C/E = characteristic plastic/elastic, D=plast.Design, F=elast. Design)

	N[kN]	Vy[kN]	Vz[kN]	Mt[kNm]	My[kNm]	Mz[kNm]	y[mm]	z[mm]	BUCK
C	58605.4	14118.33	24179.38	3185.57	40707.56	6468.39	2.2	1054.	c c
C	-1988.0				40764.28	0.00	0.0	1111.	COMB
C	-3636.3				0.00	6456.85	0.0	0.0	COMB
C	-65878.1	14118.33	24179.38	3185.57	-46319.9	-6452.18	-2.2	1262.	
C	-5284.6				-46720.7	0.00	0.0	1111.	COMB
C	-3636.3				0.00	-6456.85	0.0	0.0	COMB
E	62718.8	9399.84	17045.84	1601.36	35257.78	3296.90	0.0	1111.	
E	-62718.8	9399.84	17045.84	1601.36	-35257.8	-3296.90	0.0	1111.	
D	50961.2	12276.81	20213.96	2293.66	35397.88	5405.44	2.0	1054.	
D	-1728.7				35447.20	0.00	0.0	1111.	COMB
D	-2424.2				0.00	5398.10	0.0	0.0	COMB
D	-55809.7	12276.81	20213.96	2293.66	-39257.5	-5395.66	-2.0	1214.	
D	-3119.7				-39418.1	0.00	0.0	1111.	COMB
D	-2424.2				0.00	-5398.10	0.0	0.0	COMB

SOFiSTiK AG - www.sofistik.de

Composite bridge 38+50+38, b=14.25m, 2x2HL1100R HISTAR460 , slab 0.30m C30/37

Design forces and moments
(C/E = characteristic plastic/elastic, D=plast.Design, F=elast. Design)

	N[kN]	Vy[kN]	Vz[kN]	Mt[kNm]	My[kNm]	Mz[kNm]	y[mm]	z[mm]	BUCK
F	54538.1	8173.78	14822.47	1067.57	30658.94	2866.87	0.0	1111.	
F	-54538.1	8173.78	14822.47	1067.57	-30658.9	-2866.87	0.0	1111.	

Additional Design Data

M	periphery-O/-I [m2/m]	[m2/m]	deff [mm]	t-min [mm]	t-max [mm]	SMP [o/o]	thet-p [tm2/m]	thet-y [tm2/m]	thet-z [tm2/m]	thet-yz [tm2/m]
	7.578		49.4	32.0	206.5	0.0	1.163	1.132	0.031	
1	7.161		48.8	45.0	52.0	0.0	0.837	0.806	0.031	
25	0.413		1174.0			0.0	0.002	0.002		
**	0.004		32.0			0.0	0.000	0.000	0.000	

Cross section No. 166.5 = CS 30 - in-situ conc:C3

Cross section No. 167 - VFT (153)

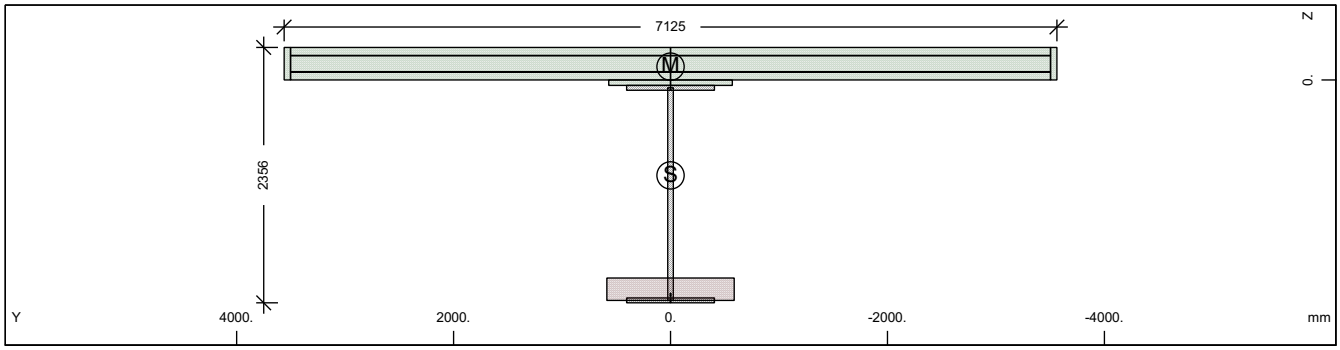

Cross section No. 167 - VFT (153)

Static properties of cross section

Mat NoR	A[cm2] It[cm4]	Ay/Az/Ayz [cm2]	Iy/Iz/Iyz [cm4]	ys/zs [mm]	y/z-sc [mm]	modules [N/mm2]	gam [kN/m]
1	2291.28	365.52	16630374.	0.0	0.0	210000	74.65
	6270.0	634.32	17540708.	880.2	-122.7	80769	

Additional static properties of cross section

Alfa-T [1/°K]	ymin ymax [mm]	zmin zmax [mm]	hymin hzmin [mm]	AK AB [cm2]	MB	Tau-T Tau-B [1/m3]	Tau-Vy Tau-Vz [1/m2]
1.2E-05	-3562.5	-1180.2		1.654E+03		1.030E+01	3.332E+01
	3562.5	1175.3		2.437E+04		1.255E+02	2.217E+01

Section values for warping

Wmin[cm2]	Wmax[cm2]	CM[cm6]	CMS[cm4]	ASwyy[cm6]	ASwzz[cm6]	ry[mm]	rz[mm]
-8730.53	8730.53	1.043E+10	1820528.1	613.52	581.68	0.0	1080.2

Partial cross sections

Mat NoR	A[cm2] It[cm4]	Ay/Az/Ayz [cm2]	Iy/Iz/Iyz [cm4]	ys/zs [mm]	modules [N/mm2]	gam [kN/m]
1	1748.47	0.11	10270380.	0.0	210000	13.73
	14109.6	365.36	398580.9	1052.8	80769	
25	2424.50		86168.4	0.0	10667	6.06
	11138760.	4.48	0.0	1929.8	4444	
210	0.64	0.00	0.0	0.0	200000	0.00
	2.2	0.00	0.0	1983.0	76923	
31	21945.00	16985.39	170028.4	0.0	0	54.86
	6417251.4	11901.72	904880243.	-145.5	0	
300	440.00	383.68	24749.9	0.0	200000	0.00
	14.5	281.63	17999229.	-150.0	76923	

SOFiSTiK AG - www.sofistik.de

Composite bridge 38+50+38, b=14.25m, 2x2HL1100R HISTAR460 , slab 0.30m C30/37

Design values of cross section

Mat NoR	A[cm2] It[cm4]	Ay/Az/Ayz [cm2]	Iy/Iz/Iyz [cm4]	ys/zs [mm]	modules [N/mm2]	gam [kN/m]
1	2262.54	365.52	16308780.	0.0	182609	74.65
	6270.0	633.76	17540708.	866.8	70234	

Design forces and moments
(C/E = characteristic plastic/elastic, D=plast.Design, F=elast. Design)

	N[kN]	Vy[kN]	Vz[kN]	Mt[kNm]	My[kNm]	Mz[kNm]	y[mm]	z[mm]	BUCK
C	80605.8	63029.25	52980.53	101772.8	73307.41	102075.9	28.5	-129.	c c
C	-81789.9				131418.6	0.00	0.0	880.2	COMB
C	-36554.2				0.00	102346.8	0.0	0.0	COMB
C	-146595.	63029.25	52980.53	101772.8	-70449.0	-101869.	-28.5	631.2	
C	8681.4				-71530.6	0.00	0.0	880.2	COMB
C	-36554.2				0.00	-102347.	0.0	0.0	COMB
E	76757.8	8664.67	13019.93	1601.58	47400.42	26287.21	0.0	880.2	
E	-76757.8	8664.67	13019.93	1601.58	-47400.4	-26287.2	0.0	880.2	
D	70092.0	47461.24	39950.99	68036.04	62540.70	76996.04	20.1	-73.5	
D	-57763.9				100576.9	0.00	0.0	880.2	COMB
D	-24369.5				0.00	77143.41	0.0	0.0	COMB
D	-114085.	47461.24	39951.00	68036.05	-59307.3	-76898.6	-20.1	582.3	
D	9024.9				-60651.5	0.00	0.0	880.2	COMB
D	-24369.5				0.00	-77143.4	0.0	0.0	COMB
F	66745.9	7534.50	11321.68	1067.72	41217.76	22858.45	0.0	880.2	
F	-66745.9	7534.50	11321.68	1067.72	-41217.8	-22858.4	0.0	880.2	

Additional Design Data

M	periphery-O/-I [m2/m]	[m2/m]	deff [mm]	t-min [mm]	t-max [mm]	SMP [o/o]	thet-p [tm2/m]	thet-y [tm2/m]	thet-z [tm2/m]	thet-yz [tm2/m]
	52.133		8.8	3.1	300.0	0.0	26.918	4.265	22.653	
1	7.161		48.8	45.0	52.0	0.0	0.838	0.806	0.031	
25	0.413		1174.0			0.0	0.002	0.002		
**	0.004		32.0			0.0	0.000		0.000	
31	16.530		265.5	50.0	300.0	0.0	22.626	0.004	22.622	
**	28.025		3.1	3.1	3.1	0.0	0.000	0.000	0.000	

Cross section No. 167.1 = CS 1 - steel alone

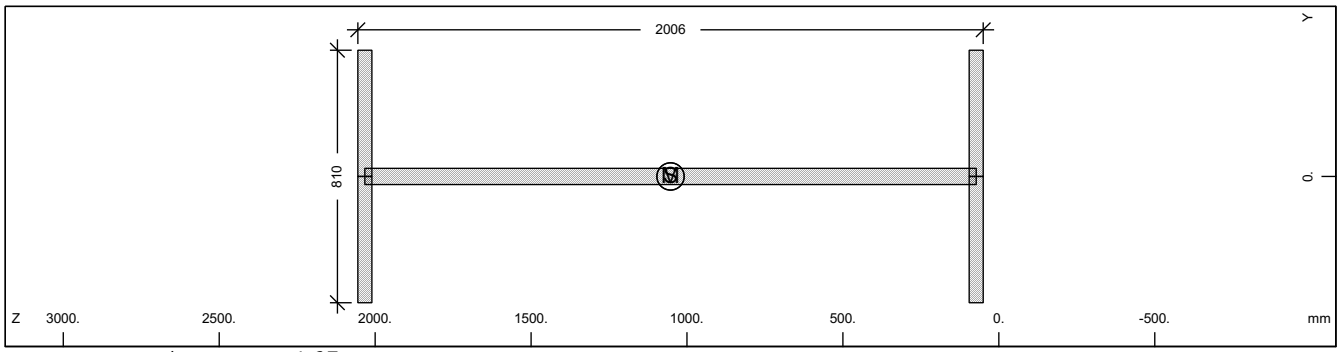

Cross section No. 167

Static properties of cross section

Mat NoR	A[cm2] It[cm4]	Ay/Az/Ayz [cm2]	Iy/Iz/Iyz [cm4]	ys/zs [mm]	modules [N/mm2]	gam [kN/m]
1	1748.47	607.50	10270380.	0.0	210000	13.73
	6270.0	964.28	398580.9	1052.8	80769	

Additional static properties of cross section

Alfa-T [1/°K]	ymin ymax [mm]	zmin zmax [mm]	hymin hzmin [mm]	AK AB [cm2]	MB	Tau-T Tau-B [1/m3]	Tau-Vy Tau-Vz [1/m2]
1.2E-05	-405.0	-1002.8		1.044E+03		3.685E+02	2.058E+01
	405.0	1002.8				1.255E+02	1.137E+01

SOFiSTiK AG - www.sofistik.de

Composite bridge 38+50+38, b=14.25m, 2x2HL1100R HISTAR460 , slab 0.30m C30/37

Section values for warping

Wmin[cm2]	Wmax[cm2]	CM[cm6]	CMS[cm4]	ASwyy[cm6]	ASwzz[cm6]	ry[mm]	rz[mm]
-3970.05	3970.053829986105.		5837502.7	0.48	12.37	0.0	0.0

Design values of cross section

Mat NoR	A[cm2] It[cm4]	Ay/Az/Ayz [cm2]	Iy/Iz/Iyz [cm4]	ys/zs [mm]	modules [N/mm2]	gam [kN/m]
1	1748.47	607.50	10270380.	0.0	182609	13.73
	6270.0	964.28	398580.9	1052.8	70234	

Design forces and moments
(C/E = characteristic plastic/elastic, D=plast.Design, F=elast. Design)

	N[kN]	Vy[kN]	Vz[kN]	Mt[kNm]	My[kNm]	Mz[kNm]	y[mm]	z[mm]	BUCK
C	58573.7	14099.76	19717.78	829.91	40678.35	5389.33	0.0	1053.	c c
C	0.0				0.00	0.00	0.0	0.0	COMB
E	58573.7	9399.84	17013.18	524.80	34311.14	3296.90	0.0	1053.	
D	50933.6	12260.66	17145.89	721.66	35372.48	4686.38	0.0	1053.	
D	0.0				0.00	0.00	0.0	0.0	COMB
F	50933.6	8173.78	14794.07	456.35	29835.77	2866.87	0.0	1053.	

Additional Design Data

M	periphery-O/-I [m2/m]	[m2/m]	deff [mm]	t-min [mm]	t-max [mm]	SMP [o/o]	thet-p [tm2/m]	thet-y [tm2/m]	thet-z [tm2/m]	thet-yz [tm2/m]
	7.161		48.8	45.0	52.0	0.0	0.838	0.806	0.031	

Cross section No. 167.2 = CS 10 - prefab. slab C1

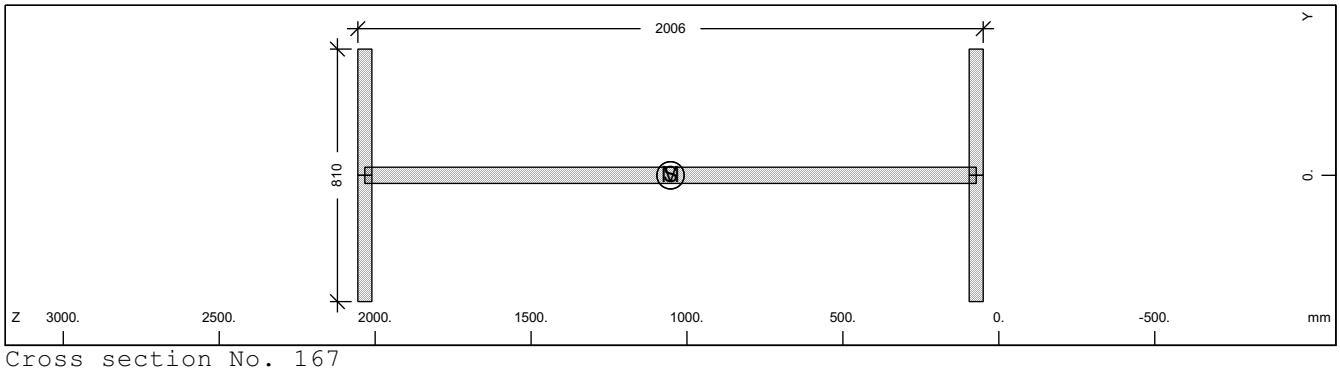

Cross section No. 167

Static properties of cross section

Mat NoR	A[cm2] It[cm4]	Ay/Az/Ayz [cm2]	Iy/Iz/Iyz [cm4]	ys/zs [mm]	modules [N/mm2]	gam [kN/m]
1	1748.47	607.50	10270380.	0.0	210000	13.73
	6270.0	964.28	398580.9	1052.8	80769	

Additional static properties of cross section

Alfa-T [1/°K]	ymin ymax [mm]	zmin zmax [mm]	hymin hzmin [mm]	AK AB [cm2]	MB	Tau-T Tau-B [1/m3]	Tau-Vy Tau-Vz [1/m2]
1.2E-05	-405.0	-1002.8		1.044E+03		3.685E+02	2.058E+01
	405.0	1002.8				1.255E+02	1.137E+01

Section values for warping

Wmin[cm2]	Wmax[cm2]	CM[cm6]	CMS[cm4]	ASwyy[cm6]	ASwzz[cm6]	ry[mm]	rz[mm]
-3970.05	3970.053829986105.		5837502.7	0.48	12.37	0.0	0.0

Design values of cross section

Mat NoR	A[cm2] It[cm4]	Ay/Az/Ayz [cm2]	Iy/Iz/Iyz [cm4]	ys/zs [mm]	modules [N/mm2]	gam [kN/m]
1	1748.47	607.50	10270380.	0.0	182609	13.73
	6270.0	964.28	398580.9	1052.8	70234	

SOFiSTiK AG - www.sofistik.de

Composite bridge 38+50+38, b=14.25m, 2x2HL1100R HISTAR460 , slab 0.30m C30/37

Design forces and moments
(C/E = characteristic plastic/elastic, D=plast.Design, F=elast. Design)

	N[kN]	Vy[kN]	Vz[kN]	Mt[kNm]	My[kNm]	Mz[kNm]	y[mm]	z[mm]	BUCK
C	58573.7	14099.76	19717.78	829.91	40678.35	5389.33	0.0	1053.	c c
C	0.0				0.00	0.00	0.0	0.0	COMB
E	58573.7	9399.84	17013.18	524.80	34311.14	3296.90	0.0	1053.	
D	50933.6	12260.66	17145.89	721.66	35372.48	4686.38	0.0	1053.	
D	0.0				0.00	0.00	0.0	0.0	COMB
F	50933.6	8173.78	14794.07	456.35	29835.77	2866.87	0.0	1053.	

Additional Design Data

M	periphery-O/-I [m2/m]	[m2/m]	deff [mm]	t-min [mm]	t-max [mm]	SMP [o/o]	thet-p [tm2/m]	thet-y [tm2/m]	thet-z [tm2/m]	thet-yz [tm2/m]
	7.161		48.8	45.0	52.0	0.0	0.838	0.806	0.031	

Cross section No. 167.3 = CS 20 - in-situ conc:C2

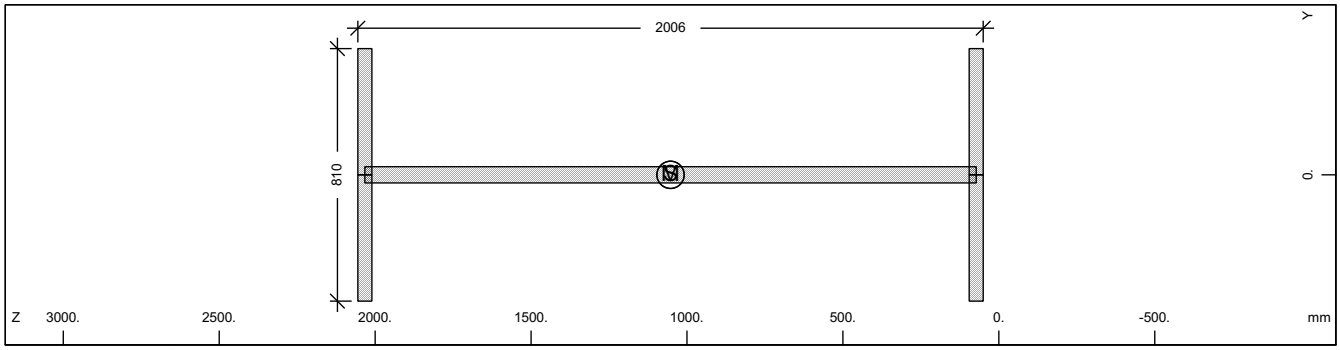

Cross section No. 167

Static properties of cross section

Mat NoR	A[cm2] It[cm4]	Ay/Az/Ayz [cm2]	Iy/Iz/Iyz [cm4]	ys/zs [mm]	modules [N/mm2]	gam [kN/m]
1	1748.47	607.50	10270380.	0.0	210000	13.73
	6270.0	964.28	398580.9	1052.8	80769	

Additional static properties of cross section

Alfa-T [1/°K]	ymin ymax [mm]	zmin zmax [mm]	hymin hzmin [mm]	AK AB [cm2]	MB	Tau-T Tau-B [1/m3]	Tau-Vy Tau-Vz [1/m2]
1.2E-05	-405.0	-1002.8		1.044E+03		3.685E+02	2.058E+01
	405.0	1002.8				1.255E+02	1.137E+01

Section values for warping

Wmin[cm2]	Wmax[cm2]	CM[cm6]	CMS[cm4]	ASwyy[cm6]	ASwzz[cm6]	ry[mm]	rz[mm]
-3970.05	3970.053829986105.		5837502.7	0.48	12.37	0.0	0.0

Design values of cross section

Mat NoR	A[cm2] It[cm4]	Ay/Az/Ayz [cm2]	Iy/Iz/Iyz [cm4]	ys/zs [mm]	modules [N/mm2]	gam [kN/m]
1	1748.47	607.50	10270380.	0.0	182609	13.73
	6270.0	964.28	398580.9	1052.8	70234	

Design forces and moments
(C/E = characteristic plastic/elastic, D=plast.Design, F=elast. Design)

	N[kN]	Vy[kN]	Vz[kN]	Mt[kNm]	My[kNm]	Mz[kNm]	y[mm]	z[mm]	BUCK
C	58573.7	14099.76	19717.78	829.91	40678.35	5389.33	0.0	1053.	c c
C	0.0				0.00	0.00	0.0	0.0	COMB
E	58573.7	9399.84	17013.18	524.80	34311.14	3296.90	0.0	1053.	
D	50933.6	12260.66	17145.89	721.66	35372.48	4686.38	0.0	1053.	
D	0.0				0.00	0.00	0.0	0.0	COMB
F	50933.6	8173.78	14794.07	456.35	29835.77	2866.87	0.0	1053.	

SOFiSTiK AG - www.sofistik.de

Composite bridge 38+50+38, b=14.25m, 2x2HL1100R HISTAR460 , slab 0.30m C30/37

Additional Design Data

M	periphery-O/-I [m2/m]	[m2/m]	deff [mm]	t-min [mm]	t-max [mm]	SMP [o/o]	thet-p [tm2/m]	thet-y [tm2/m]	thet-z [tm2/m]	thet-yz [tm2/m]
	7.161		48.8	45.0	52.0	0.0	0.838	0.806	0.031	

Cross section No. 167.4 = CS 21 - reinf active:C2

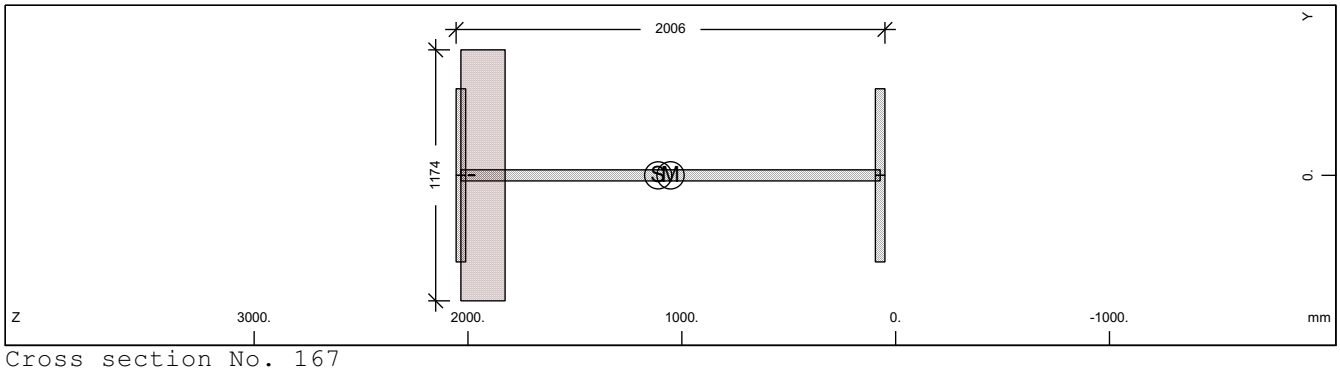

Cross section No. 167

Static properties of cross section

Mat NoR	A[cm2] It[cm4]	Ay/Az/Ayz [cm2]	Iy/Iz/Iyz [cm4]	ys/zs [mm]	modules [N/mm2]	gam [kN/m]
1	1872.23	607.50	11164271.	0.0	210000	19.79
	6270.0	954.31	398580.9	1110.7	80769	

Additional static properties of cross section

Alfa-T [1/°K]	ymin ymax [mm]	zmin zmax [mm]	hymin hzmin [mm]	AK AB [cm2]	MB	Tau-T Tau-B [1/m3]	Tau-Vy Tau-Vz [1/m2]
1.2E-05	-587.0	-1060.7		1.654E+03		1.030E+01	2.058E+01
	587.0	944.8		2.424E+03		1.255E+02	1.135E+01

Section values for warping

Wmin[cm2]	Wmax[cm2]	CM[cm6]	CMS[cm4]	ASwyy[cm6]	ASwzz[cm6]	ry[mm]	rz[mm]
-3970.05	3970.05	3829986105.	5837502.7	-0.34	-9.56	0.0	15.5

Partial cross sections

Mat NoR	A[cm2] It[cm4]	Ay/Az/Ayz [cm2]	Iy/Iz/Iyz [cm4]	ys/zs [mm]	modules [N/mm2]	gam [kN/m]
1	1748.47	607.50	10270380.	0.0	210000	13.73
	14109.6	953.57	398580.9	1052.8	80769	
25	2424.50		86168.4	0.0	10667	6.06
	11138760.	13.51	0.0	1929.8	4444	
210	0.64	0.00	0.0	0.0	200000	0.00
	2.2	0.00	0.0	1983.0	76923	

Design values of cross section

Mat NoR	A[cm2] It[cm4]	Ay/Az/Ayz [cm2]	Iy/Iz/Iyz [cm4]	ys/zs [mm]	modules [N/mm2]	gam [kN/m]
1	1843.50	607.50	10967499.	0.0	182609	19.79
	6270.0	954.14	398580.9	1098.0	70234	

Design forces and moments
(C/E = characteristic plastic/elastic, D=plast.Design, F=elast. Design)

	N[kN]	Vy[kN]	Vz[kN]	Mt[kNm]	My[kNm]	Mz[kNm]	y[mm]	z[mm]	BUCK
C	58605.8	14118.33	24180.08	3185.84	40708.25	6468.52	2.2	1054.	c c
C	-1988.2				40764.98	0.00	0.0	1111.	COMB
C	-3636.7				0.00	6456.98	0.0	0.0	COMB
C	-65879.3	14118.33	24180.08	3185.84	-46321.2	-6452.30	-2.2	1262.	
C	-5285.3				-46722.0	0.00	0.0	1111.	COMB
C	-3636.7				0.00	-6456.98	0.0	0.0	COMB
E	62719.7	9399.84	17046.02	1601.54	35258.41	3296.90	0.0	1111.	
E	-62719.7	9399.84	17046.02	1601.54	-35258.4	-3296.90	0.0	1111.	
D	50961.6	12276.81	20214.48	2293.84	35398.48	5405.53	2.0	1054.	

SOFiSTiK AG - www.sofistik.de

Composite bridge 38+50+38, b=14.25m, 2x2HL1100R HISTAR460 , slab 0.30m C30/37

Design forces and moments
(C/E = characteristic plastic/elastic, D=plast.Design, F=elast. Design)

	N[kN]	Vy[kN]	Vz[kN]	Mt[kNm]	My[kNm]	Mz[kNm]	y[mm]	z[mm]	BUCK
D	-1728.9				35447.81	0.00	0.0	1111.	COMB
D	-2424.5				0.00	5398.19	0.0	0.0	COMB
D	-55810.6	12276.81	20214.48	2293.84	-39258.5	-5395.74	-2.0	1214.	
D	-3120.1				-39419.2	0.00	0.0	1111.	COMB
D	-2424.5				0.00	-5398.19	0.0	0.0	COMB
F	54538.9	8173.78	14822.62	1067.69	30659.49	2866.87	0.0	1111.	
F	-54538.9	8173.78	14822.62	1067.69	-30659.5	-2866.87	0.0	1111.	

Additional Design Data

M	periphery-O/-I [m2/m]	[m2/m]	deff [mm]	t-min [mm]	t-max [mm]	SMP [o/o]	thet-p [tm2/m]	thet-y [tm2/m]	thet-z [tm2/m]	thet-yz [tm2/m]
	7.578		49.4	32.0	206.5	0.0	1.163	1.132	0.031	
1	7.161		48.8	45.0	52.0	0.0	0.838	0.806	0.031	
25	0.413		1174.0			0.0	0.002	0.002		
**	0.004		32.0			0.0	0.000		0.000	

Cross section No. 167.5 = CS 30 - in-situ conc:C3

Cross section No. 168 - VFT (153)

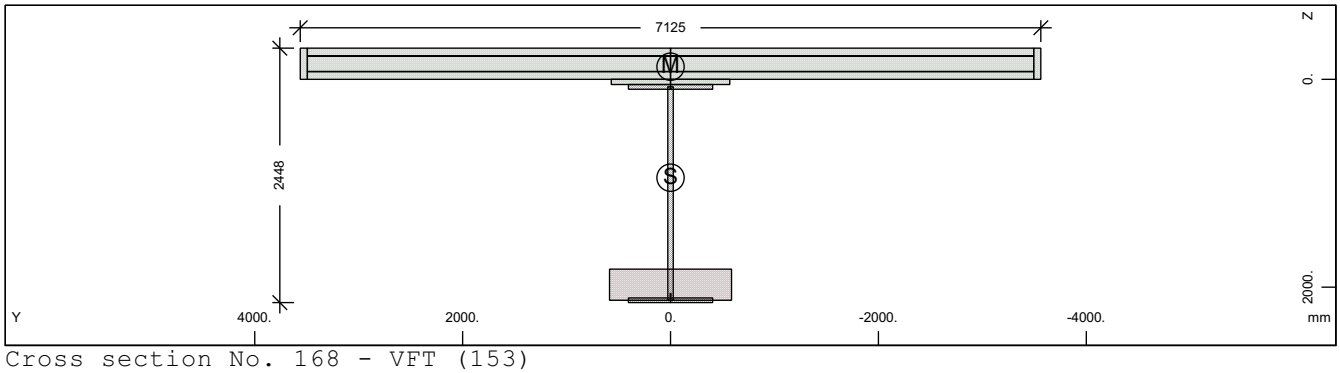

Cross section No. 168 - VFT (153)

Static properties of cross section

Mat NoR	A[cm2] It[cm4]	Ay/Az/Ayz [cm2]	Iy/Iz/Iyz [cm4]	ys/zs [mm]	y/z-sc [mm]	modules [N/mm2]	gam [kN/m]
1	2393.77	364.66	18816191.	0.0	0.0	210000	77.75
	6270.0	680.30	17401432.	946.7	-121.4	80769	

Additional static properties of cross section

Alfa-T [1/°K]	ymin ymax [mm]	zmin zmax [mm]	hymin hzmin [mm]	AK AB [cm2]	MB	Tau-T Tau-B [1/m3]	Tau-Vy Tau-Vz [1/m2]
1.2E-05	-3562.5	-1246.7		2.381E+03		7.154E+00	3.340E+01
	3562.5	1201.6		2.546E+04		1.255E+02	2.072E+01

Section values for warping

Wmin[cm2]	Wmax[cm2]	CM[cm6]	CMS[cm4]	ASwyy[cm6]	ASwzz[cm6]	ry[mm]	rz[mm]
-9101.30	9101.30	1.123E+10	2098686.4	477.87	516.72	0.0	1238.8

Partial cross sections

Mat NoR	A[cm2] It[cm4]	Ay/Az/Ayz [cm2]	Iy/Iz/Iyz [cm4]	ys/zs [mm]	modules [N/mm2]	gam [kN/m]
1	1796.74	0.11	11435612.	0.0	210000	14.10
	14544.6	408.40	398580.9	1099.2	80769	
25	3514.32		262426.8	0.0	10667	8.79
	16145699.	11.52	0.0	1976.2	4444	
210	0.64	0.00	0.0	0.0	200000	0.00
	2.2	0.00	0.0	2075.8	76923	
31	21945.00	17177.40	170028.4	0.0	0	54.86
	6417251.4	12120.51	904880243.	-145.5	0	

SOFiSTiK AG - www.sofistik.de

Composite bridge 38+50+38, b=14.25m, 2x2HL1100R HISTAR460 , slab 0.30m C30/37

300	438.80	382.77	24682.7	0.0	200000	0.00
	14.4	284.30	17852989.	-150.0	76923	

Design values of cross section

Mat	A[cm2]	Ay/Az/Ayz	Iy/Iz/Iyz	ys/zs	modules	gam
NoR	It[cm4]	[cm2]	[cm4]	[mm]	[N/mm2]	[kN/m]
1	2352.12	364.66	18363871.	0.0	182609	77.75
	6270.0	679.64	17401430.	928.5	70234	

Design forces and moments
(C/E = characteristic plastic/elastic, D=plast.Design, F=elast. Design)

	N[kN]	Vy[kN]	Vz[kN]	Mt[kNm]	My[kNm]	Mz[kNm]	y[mm]	z[mm]	BUCK
C	82163.1	62994.75	55712.38	102852.6	77808.16	102432.7	27.7	-74.8	c c
C	-82432.2				139842.9	0.00	0.0	946.7	COMB
C	-38189.0				0.00	102638.6	0.0	0.0	COMB
C	-150280.	62994.75	55712.37	102852.6	-78265.6	-102140.	-27.7	773.1	
C	6054.2				-78791.6	0.00	0.0	946.7	COMB
C	-38189.0				0.00	-102639.	0.0	0.0	COMB
E	80191.2	8642.75	13932.17	2306.39	52458.25	26149.50	0.0	946.7	
E	-80191.2	8642.75	13932.17	2306.39	-52458.2	-26149.5	0.0	946.7	
D	71446.2	47431.24	41961.66	68760.80	66548.77	77185.45	20.1	-66.4	
D	-58322.4				107013.2	0.00	0.0	946.7	COMB
D	-25459.3				0.00	77299.80	0.0	0.0	COMB
D	-116858.	47431.24	41961.66	68760.79	-65407.7	-77044.4	-20.1	702.4	
D	7403.7				-66312.3	0.00	0.0	946.7	COMB
D	-25459.3				0.00	-77299.8	0.0	0.0	COMB
F	69731.5	7515.44	12114.93	1537.59	45615.87	22738.70	0.0	946.7	
F	-69731.5	7515.44	12114.93	1537.59	-45615.9	-22738.7	0.0	946.7	

Additional Design Data

M	periphery-O/-I		deff	t-min	t-max	SMP	thet-p	thet-y	thet-z	thet-yz
	[m2/m]	[m2/m]	[mm]	[mm]	[mm]	[o/o]	[tm2/m]	[tm2/m]	[tm2/m]	[tm2/m]
	52.429		9.1	3.1	300.0	0.0	28.017	5.363	22.653	
1	7.347		48.9	45.0	52.0	0.0	0.929	0.898	0.031	
25	0.599		1174.0			0.0	0.007	0.007		
**	0.004		32.0			0.0	0.000		0.000	
31	16.530		265.5	50.0	300.0	0.0	22.626	0.004	22.622	
**	27.949		3.1	3.1	3.1	0.0	0.000	0.000	0.000	

Cross section No. 168.1 = CS 1 - steel alone

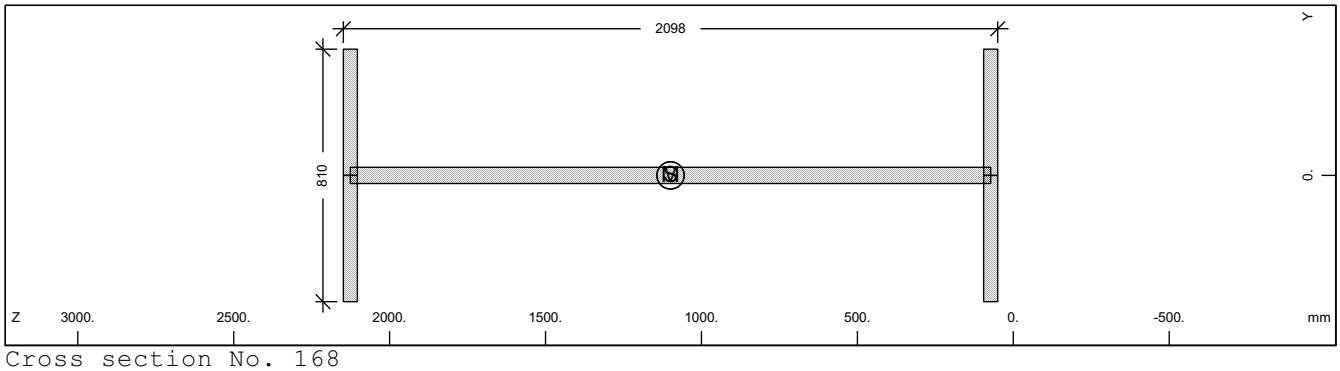

Cross section No. 168

Static properties of cross section

Mat	A[cm2]	Ay/Az/Ayz	Iy/Iz/Iyz	ys/zs	modules	gam
NoR	It[cm4]	[cm2]	[cm4]	[mm]	[N/mm2]	[kN/m]
1	1796.74	607.50	11435612.	0.0	210000	14.10
	6270.0	1011.28	398580.9	1099.2	80769	

SOFiSTiK AG - www.sofistik.de

Composite bridge 38+50+38, b=14.25m, 2x2HL1100R HISTAR460 , slab 0.30m C30/37

Additional static properties of cross section

Alfa-T	ymin ymax	zmin zmax	hymin hzmin	AK AB	MB	Tau-T Tau-B	Tau-Vy Tau-Vz
[1/°K]	[mm]	[mm]	[mm]	[cm2]		[1/m3]	[1/m2]
1.2E-05	-405.0	-1049.2		1.076E+03		3.575E+02	2.058E+01
	405.0	1049.2				1.255E+02	1.090E+01

Section values for warping

Wmin[cm2]	Wmax[cm2]	CM[cm6]	CMS[cm4]	ASwyy[cm6]	ASwzz[cm6]	ry[mm]	rz[mm]
-4158.03	4158.034201271588.		6403400.8	-0.70	-19.97	0.0	0.0

Design values of cross section

Mat NoR	A[cm2] It[cm4]	Ay/Az/Ayz [cm2]	Iy/Iz/Iyz [cm4]	ys/zs [mm]	modules [N/mm2]	gam [kN/m]
1	1796.74	607.50	11435612.	0.0	182609	14.10
	6270.0	1011.28	398580.9	1099.2	70234	

Design forces and moments
(C/E = characteristic plastic/elastic, D=plast.Design, F=elast. Design)

	N[kN]	Vy[kN]	Vz[kN]	Mt[kNm]	My[kNm]	Mz[kNm]	y[mm]	z[mm]	BUCK
C	60190.8	14099.76	20651.41	854.18	43434.58	5410.36	0.0	1099.	c c
C	0.0				0.00	0.00	0.0	0.0	COMB
E	60190.8	9399.84	17741.33	540.98	36513.80	3296.90	0.0	1099.	
D	52339.8	12260.66	17957.75	742.77	37769.20	4704.66	0.0	1099.	
D	0.0				0.00	0.00	0.0	0.0	COMB
F	52339.8	8173.78	15427.24	470.42	31751.13	2866.87	0.0	1099.	

Additional Design Data

M	periphery-O/-I [m2/m]	[m2/m]	deff [mm]	t-min [mm]	t-max [mm]	SMP [o/o]	thet-p [tm2/m]	thet-y [tm2/m]	thet-z [tm2/m]	thet-yz [tm2/m]
	7.347		48.9	45.0	52.0	0.0	0.929	0.898	0.031	

Cross section No. 168.2 = CS 10 - prefab. slab C1

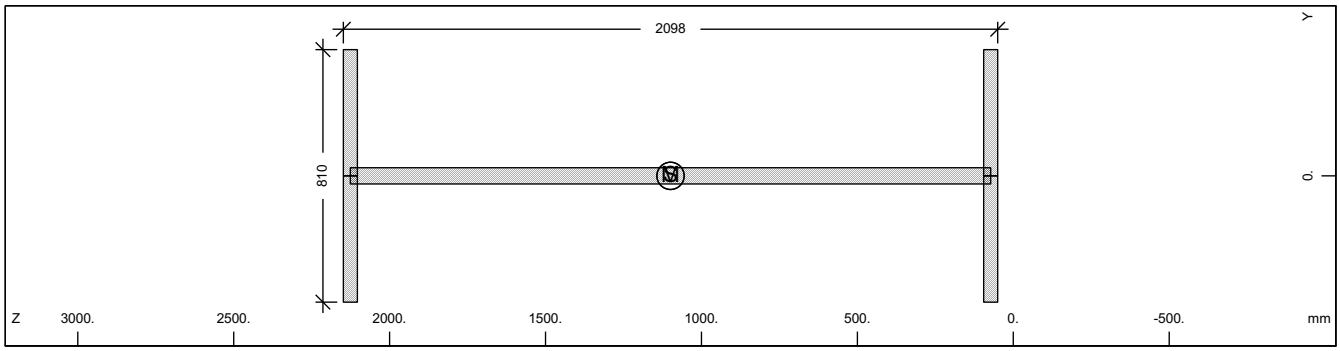

Cross section No. 168

Static properties of cross section

Mat NoR	A[cm2] It[cm4]	Ay/Az/Ayz [cm2]	Iy/Iz/Iyz [cm4]	ys/zs [mm]	modules [N/mm2]	gam [kN/m]
1	1796.74	607.50	11435612.	0.0	210000	14.10
	6270.0	1011.28	398580.9	1099.2	80769	

Additional static properties of cross section

Alfa-T	ymin ymax	zmin zmax	hymin hzmin	AK AB	MB	Tau-T Tau-B	Tau-Vy Tau-Vz
[1/°K]	[mm]	[mm]	[mm]	[cm2]		[1/m3]	[1/m2]
1.2E-05	-405.0	-1049.2		1.076E+03		3.575E+02	2.058E+01
	405.0	1049.2				1.255E+02	1.090E+01

Section values for warping

Wmin[cm2]	Wmax[cm2]	CM[cm6]	CMS[cm4]	ASwyy[cm6]	ASwzz[cm6]	ry[mm]	rz[mm]
-4158.03	4158.034201271588.		6403400.8	-0.70	-19.97	0.0	0.0

SOFiSTiK AG - www.sofistik.de

Composite bridge 38+50+38, b=14.25m, 2x2HL1100R HISTAR460 , slab 0.30m C30/37

Design values of cross section

Mat NoR	A[cm2] It[cm4]	Ay/Az/Ayz [cm2]	Iy/Iz/Iyz [cm4]	ys/zs [mm]	modules [N/mm2]	gam [kN/m]
1	1796.74	607.50	11435612.	0.0	182609	14.10
	6270.0	1011.28	398580.9	1099.2	70234	

Design forces and moments
(C/E = characteristic plastic/elastic, D=plast.Design, F=elast. Design)

	N[kN]	Vy[kN]	Vz[kN]	Mt[kNm]	My[kNm]	Mz[kNm]	y[mm]	z[mm]	BUCK
C	60190.8	14099.76	20651.41	854.18	43434.58	5410.36	0.0	1099.	c c
C	0.0				0.00	0.00	0.0	0.0	COMB
E	60190.8	9399.84	17741.33	540.98	36513.80	3296.90	0.0	1099.	
D	52339.8	12260.66	17957.75	742.77	37769.20	4704.66	0.0	1099.	
D	0.0				0.00	0.00	0.0	0.0	COMB
F	52339.8	8173.78	15427.24	470.42	31751.13	2866.87	0.0	1099.	

Additional Design Data

M	periphery-O/-I [m2/m] [m2/m]	deff [mm]	t-min [mm]	t-max [mm]	SMP [o/o]	thet-p [tm2/m]	thet-y [tm2/m]	thet-z [tm2/m]	thet-yz [tm2/m]
	7.347	48.9	45.0	52.0	0.0	0.929	0.898	0.031	

Cross section No. 168.3 = CS 20 - in-situ conc:C2

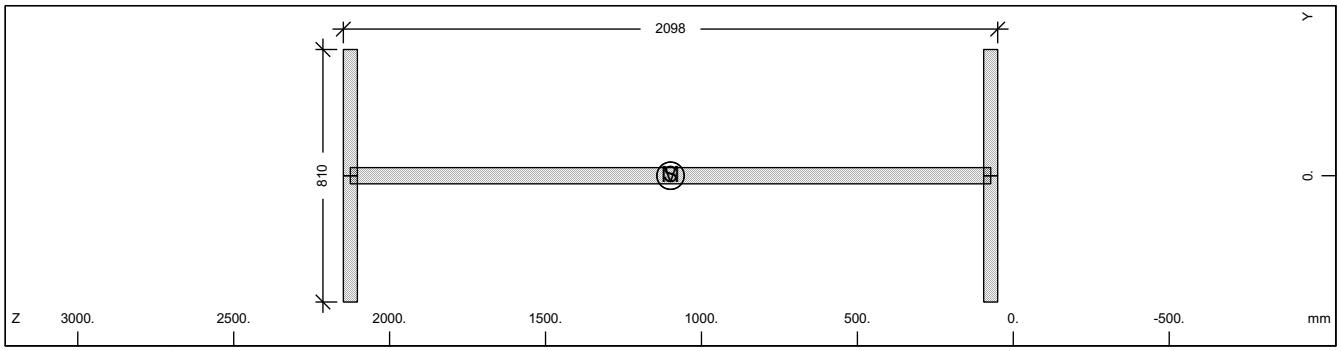

Cross section No. 168

Static properties of cross section

Mat NoR	A[cm2] It[cm4]	Ay/Az/Ayz [cm2]	Iy/Iz/Iyz [cm4]	ys/zs [mm]	modules [N/mm2]	gam [kN/m]
1	1796.74	607.50	11435612.	0.0	210000	14.10
	6270.0	1011.28	398580.9	1099.2	80769	

Additional static properties of cross section

Alfa-T [1/°K]	ymin ymax [mm]	zmin zmax [mm]	hymin hzmin [mm]	AK AB [cm2]	MB	Tau-T Tau-B [1/m3]	Tau-Vy Tau-Vz [1/m2]
1.2E-05	-405.0	-1049.2		1.076E+03		3.575E+02	2.058E+01
	405.0	1049.2				1.255E+02	1.090E+01

Section values for warping

Wmin[cm2]	Wmax[cm2]	CM[cm6]	CMS[cm4]	ASwyy[cm6]	ASwzz[cm6]	ry[mm]	rz[mm]
-4158.03	4158.034201271588.	6403400.8		-0.70	-19.97	0.0	0.0

Design values of cross section

Mat NoR	A[cm2] It[cm4]	Ay/Az/Ayz [cm2]	Iy/Iz/Iyz [cm4]	ys/zs [mm]	modules [N/mm2]	gam [kN/m]
1	1796.74	607.50	11435612.	0.0	182609	14.10
	6270.0	1011.28	398580.9	1099.2	70234	

Design forces and moments
(C/E = characteristic plastic/elastic, D=plast.Design, F=elast. Design)

	N[kN]	Vy[kN]	Vz[kN]	Mt[kNm]	My[kNm]	Mz[kNm]	y[mm]	z[mm]	BUCK
C	60190.8	14099.76	20651.41	854.18	43434.58	5410.36	0.0	1099.	c c
C	0.0				0.00	0.00	0.0	0.0	COMB
E	60190.8	9399.84	17741.33	540.98	36513.80	3296.90	0.0	1099.	

SOFiSTiK AG - www.sofistik.de

Composite bridge 38+50+38, b=14.25m, 2x2HL1100R HISTAR460 , slab 0.30m C30/37

Design forces and moments
(C/E = characteristic plastic/elastic, D=plast.Design, F=elast. Design)

	N[kN]	Vy[kN]	Vz[kN]	Mt[kNm]	My[kNm]	Mz[kNm]	y[mm]	z[mm]	BUCK
D	52339.8	12260.66	17957.75	742.77	37769.20	4704.66	0.0	1099.	
D	0.0				0.00	0.00	0.0	0.0	COMB
F	52339.8	8173.78	15427.24	470.42	31751.13	2866.87	0.0	1099.	

Additional Design Data

M	periphery-O/-I [m2/m]	[m2/m]	deff [mm]	t-min [mm]	t-max [mm]	SMP [o/o]	thet-p [tm2/m]	thet-y [tm2/m]	thet-z [tm2/m]	thet-yz [tm2/m]
	7.347		48.9	45.0	52.0	0.0	0.929	0.898	0.031	

Cross section No. 168.4 = CS 21 - reinf active:C2

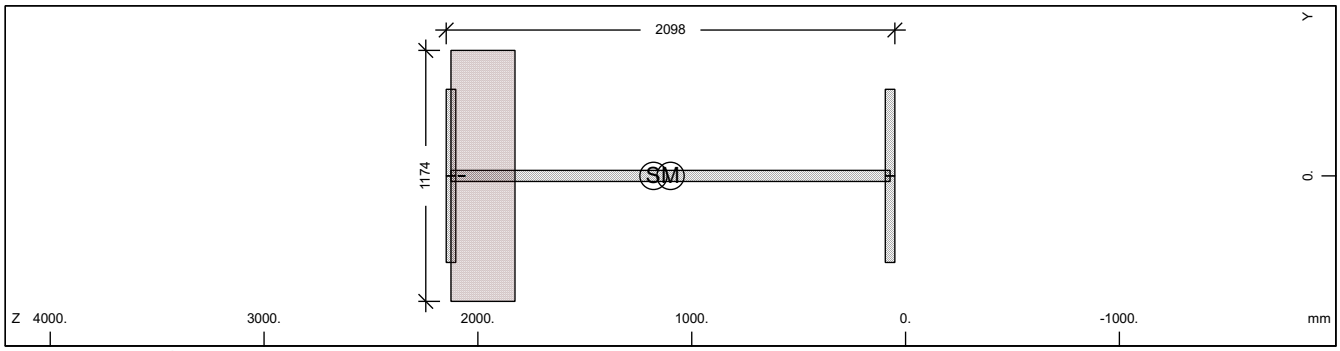

Cross section No. 168

Static properties of cross section

Mat NoR	A[cm2] It[cm4]	Ay/Az/Ayz [cm2]	Iy/Iz/Iyz [cm4]	ys/zs [mm]	modules [N/mm2]	gam [kN/m]
1	1975.86	607.50	12702735.	0.0	210000	22.89
	6270.0	988.10	398580.9	1178.7	80769	

Additional static properties of cross section

Alfa-T [1/°K]	ymin ymax [mm]	zmin zmax [mm]	hymin hzmin [mm]	AK AB [cm2]	MB	Tau-T Tau-B [1/m3]	Tau-Vy Tau-Vz [1/m2]
1.2E-05	-587.0	-1128.7		2.381E+03		7.154E+00	2.058E+01
	587.0	969.6		3.514E+03		1.255E+02	1.092E+01

Section values for warping

Wmin[cm2]	Wmax[cm2]	CM[cm6]	CMS[cm4]	ASwyy[cm6]	ASwzz[cm6]	ry[mm]	rz[mm]
-4158.03	4158.034201271588.		6403400.8	-2.01	-63.92	0.0	15.2

Partial cross sections

Mat NoR	A[cm2] It[cm4]	Ay/Az/Ayz [cm2]	Iy/Iz/Iyz [cm4]	ys/zs [mm]	modules [N/mm2]	gam [kN/m]
1	1796.74	607.50	11435612.	0.0	210000	14.10
	14544.6	986.37	398580.9	1099.2	80769	
25	3514.32		262426.8	0.0	10667	8.79
	16145699.	31.31	0.0	1976.2	4444	
210	0.64	0.00	0.0	0.0	200000	0.00
	2.2	0.00	0.0	2075.8	76923	

Design values of cross section

Mat NoR	A[cm2] It[cm4]	Ay/Az/Ayz [cm2]	Iy/Iz/Iyz [cm4]	ys/zs [mm]	modules [N/mm2]	gam [kN/m]
1	1934.21	607.50	12429039.	0.0	182609	22.89
	6270.0	987.69	398580.9	1161.5	70234	

Design forces and moments
(C/E = characteristic plastic/elastic, D=plast.Design, F=elast. Design)

	N[kN]	Vy[kN]	Vz[kN]	Mt[kNm]	My[kNm]	Mz[kNm]	y[mm]	z[mm]	BUCK
C	60222.9	14118.33	26911.93	4265.67	43465.97	6986.60	3.6	1100.	c c
C	-2738.8				43573.62	0.00	0.0	1179.	COMB

SOFiSTiK AG - www.sofistik.de

Composite bridge 38+50+38, b=14.25m, 2x2HL1100R HISTAR460 , slab 0.30m C30/37

Design forces and moments
(C/E = characteristic plastic/elastic, D=plast.Design, F=elast. Design)

	N[kN]	Vy[kN]	Vz[kN]	Mt[kNm]	My[kNm]	Mz[kNm]	y[mm]	z[mm]	BUCK
C	-5271.5				0.00	6957.79	0.0	0.0	COMB
C	-70765.9	14118.33	26911.93	4265.67	-45031.8	-6948.19	-3.6	1400.	
C	-7804.2				-51981.3	0.00	0.0	1179.	COMB
C	-5271.5				0.00	-6957.79	0.0	0.0	COMB
E	66191.2	9399.84	17710.27	2306.35	37701.70	3296.90	0.0	1179.	
E	-66191.2	9399.84	17710.27	2306.35	-37701.7	-3296.90	0.0	1179.	
D	52367.8	12276.81	22225.14	3018.65	37796.50	5749.15	2.5	1100.	
D	-2381.6				37890.11	0.00	0.0	1179.	COMB
D	-3514.3				0.00	5736.33	0.0	0.0	COMB
D	-59396.4	12276.81	22225.14	3018.65	-43138.8	-5731.47	-2.5	1332.	
D	-4647.1				-43495.2	0.00	0.0	1179.	COMB
D	-3514.3				0.00	-5736.33	0.0	0.0	COMB
F	57557.6	8173.78	15400.24	1537.57	32784.08	2866.87	0.0	1179.	
F	-57557.6	8173.78	15400.24	1537.57	-32784.1	-2866.87	0.0	1179.	

Additional Design Data

M	periphery-O/-I [m2/m]	[m2/m]	deff [mm]	t-min [mm]	t-max [mm]	SMP [o/o]	thet-p [tm2/m]	thet-y [tm2/m]	thet-z [tm2/m]	thet-yz [tm2/m]
	7.949		49.7	32.0	299.3	0.0	1.352	1.321	0.031	
1	7.347		48.9	45.0	52.0	0.0	0.929	0.898	0.031	
25	0.599		1174.0			0.0	0.007	0.007		
**	0.004		32.0			0.0	0.000		0.000	

Cross section No. 168.5 = CS 30 - in-situ conc:C3

Cross section No. 169 - VFT (153)

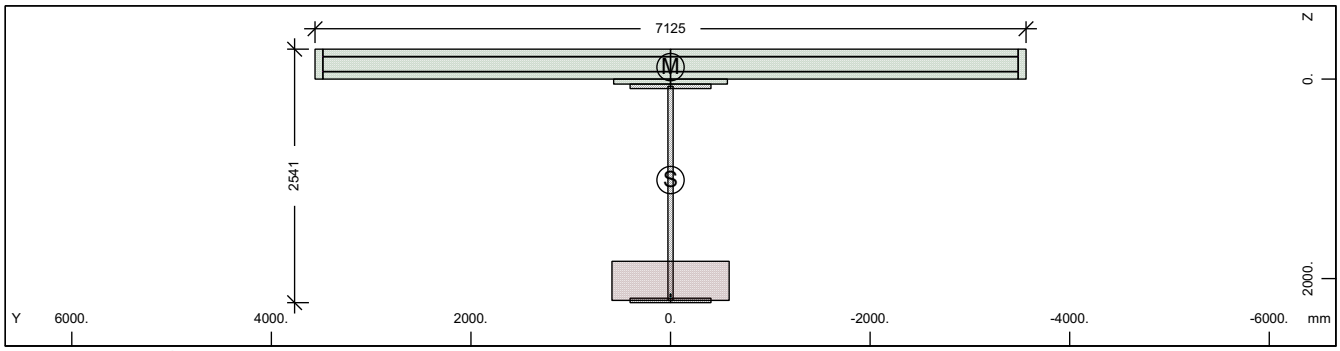

Cross section No. 169 - VFT (153)

Static properties of cross section

Mat / NoR	A[cm2] / It[cm4]	Ay/Az/Ayz [cm2]	Iy/Iz/Iyz [cm4]	ys/zs [mm]	y/z-sc [mm]	modules [N/mm2]	gam [kN/m]
1	2496.28	363.80	21085550.	0.0	0.0	210000	80.86
	6270.0	723.92	17262876.	1011.7	-120.1	80769	

Additional static properties of cross section

Alfa-T [1/°K]	ymin / ymax [mm]	zmin / zmax [mm]	hymin / hzmin [mm]	AK / AB [cm2]	MB	Tau-T / Tau-B [1/m3]	Tau-Vy / Tau-Vz [1/m2]
1.2E-05	-3562.5	-1311.7		3.109E+03		5.479E+00	3.349E+01
	3562.5	1229.5		2.655E+04		1.255E+02	1.946E+01

Section values for warping

Wmin[cm2]	Wmax[cm2]	CM[cm6]	CMS[cm4]	ASwyy[cm6]	ASwzz[cm6]	ry[mm]	rz[mm]
-9472.09	9472.09	1.207E+10	2406204.1	-403.63	-493.01	0.0	1386.2

SOFiSTiK AG - www.sofistik.de

Composite bridge 38+50+38, b=14.25m, 2x2HL1100R HISTAR460 , slab 0.30m C30/37

Partial cross sections

Mat NoR	A[cm2] It[cm4]	Ay/Az/Ayz [cm2]	Iy/Iz/Iyz [cm4]	ys/zs [mm]	modules [N/mm2]	gam [kN/m]
1	1845.02	0.12	12678593.	0.0	210000	14.48
	14979.8	450.63	398580.9	1145.6	80769	
25	4604.43		590216.3	0.0	10667	11.51
	21153936.	21.97	0.0	2022.6	4444	
210	0.64	0.00	0.0	0.0	200000	0.00
	2.2	0.00	0.0	2168.7	76923	
31	21945.00	17372.22	170028.4	0.0	0	54.86
	6417251.4	12262.79	904880243.	-145.5	0	
300	437.61	381.87	24615.5	0.0	200000	0.00
	14.4	285.15	17707506.	-150.0	76923	

Design values of cross section

Mat NoR	A[cm2] It[cm4]	Ay/Az/Ayz [cm2]	Iy/Iz/Iyz [cm4]	ys/zs [mm]	modules [N/mm2]	gam [kN/m]
1	2441.71	363.80	20508428.	0.0	182609	80.86
	6270.0	723.13	17262876.	989.1	70234	

Design forces and moments
(C/E = characteristic plastic/elastic, D=plast.Design, F=elast. Design)

	N[kN]	Vy[kN]	Vz[kN]	Mt[kNm]	My[kNm]	Mz[kNm]	y[mm]	z[mm]	BUCK
C	83720.9	62960.25	58444.93	103932.6	83244.82	102786.2	27.1	-83.6	c c
C	-83018.5				148216.6	0.00	0.0	1012.	COMB
C	-39824.2				0.00	102931.1	0.0	0.0	COMB
C	-153967.	62960.25	58444.93	103932.6	-85835.5	-102412.	-27.1	915.1	
C	3370.2				-85998.5	0.00	0.0	1012.	COMB
C	-39824.2				0.00	-102931.	0.0	0.0	COMB
E	83625.5	8620.83	14832.69	3011.38	57451.84	26012.14	0.0	1012.	
E	-83625.5	8620.83	14832.69	3011.38	-57451.8	-26012.1	0.0	1012.	
D	72800.8	47401.24	43972.84	69485.76	70674.27	77375.30	20.0	-56.2	
D	-58832.2				113426.8	0.00	0.0	1012.	COMB
D	-26549.4				0.00	77456.73	0.0	0.0	COMB
D	-119631.	47401.24	43972.85	69485.76	-71405.6	-77190.7	-20.0	822.6	
D	5733.3				-71948.1	0.00	0.0	1012.	COMB
D	-26549.4				0.00	-77456.7	0.0	0.0	COMB
F	72717.8	7496.38	12897.99	2007.59	49958.12	22619.26	0.0	1012.	
F	-72717.8	7496.38	12897.99	2007.59	-49958.1	-22619.3	0.0	1012.	

Additional Design Data

M	periphery-O/-I [m2/m]	[m2/m]	deff [mm]	t-min [mm]	t-max [mm]	SMP [o/o]	thet-p [tm2/m]	thet-y [tm2/m]	thet-z [tm2/m]	thet-yz [tm2/m]
	52.724		9.5	3.1	392.2	0.0	29.135	6.482	22.653	
1	7.532		49.0	45.0	52.0	0.0	1.027	0.995	0.031	
25	0.784		1174.0			0.0	0.015	0.015		
**	0.004		32.0			0.0	0.000		0.000	
31	16.530		265.5	50.0	300.0	0.0	22.626	0.004	22.622	
**	27.873		3.1	3.1	3.1	0.0	0.000	0.000	0.000	

SOFiSTiK AG - www.sofistik.de

Composite bridge 38+50+38, b=14.25m, 2x2HL1100R HISTAR460 , slab 0.30m C30/37

Cross section No. 169.1 = CS 1 - steel alone

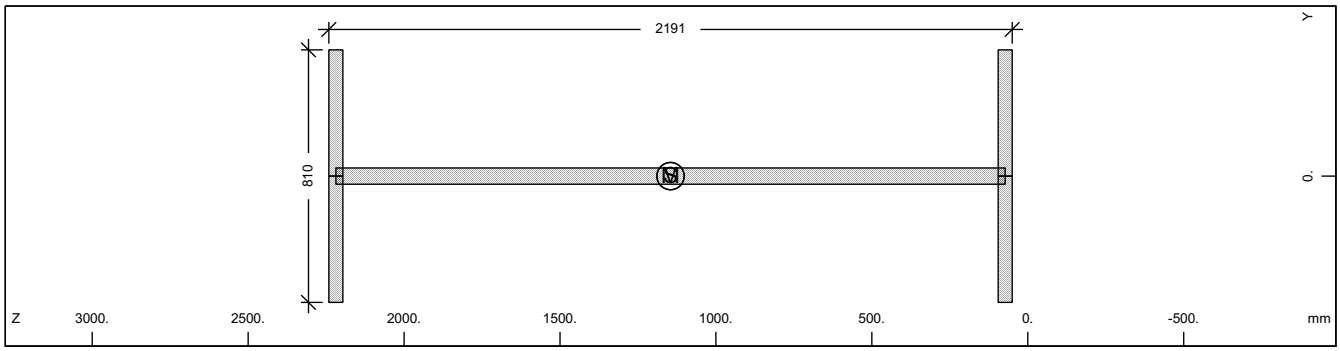

Cross section No. 169

Static properties of cross section

Mat / NoR	A[cm2] / It[cm4]	Ay/Az/Ayz [cm2]	Iy/Iz/Iyz [cm4]	ys/zs [mm]	modules [N/mm2]	gam [kN/m]
1	1845.02	607.50	12678593.	0.0	210000	14.48
	6270.0	1058.15	398580.9	1145.6	80769	

Additional static properties of cross section

Alfa-T [1/°K]	ymin / ymax [mm]	zmin / zmax [mm]	hymin / hzmin [mm]	AK / AB [cm2]	MB	Tau-T / Tau-B [1/m3]	Tau-Vy / Tau-Vz [1/m2]
1.2E-05	-405.0	-1095.6		1.108E+03		3.471E+02	2.058E+01
	405.0	1095.6				1.255E+02	1.047E+01

Section values for warping

Wmin[cm2]	Wmax[cm2]	CM[cm6]	CMS[cm4]	ASwyy[cm6]	ASwzz[cm6]	ry[mm]	rz[mm]
-4346.06	4346.064589834269.		6995631.1	0.45	14.39	0.0	0.0

Design values of cross section

Mat / NoR	A[cm2] / It[cm4]	Ay/Az/Ayz [cm2]	Iy/Iz/Iyz [cm4]	ys/zs [mm]	modules [N/mm2]	gam [kN/m]
1	1845.02	607.50	12678593.	0.0	182609	14.48
	6270.0	1058.15	398580.9	1145.6	70234	

Design forces and moments
(C/E = characteristic plastic/elastic, D=plast.Design, F=elast. Design)

	N[kN]	Vy[kN]	Vz[kN]	Mt[kNm]	My[kNm]	Mz[kNm]	y[mm]	z[mm]	BUCK
C	61808.3	14099.76	21585.29	878.46	46266.62	5431.38	0.0	1146.	c c
C	0.0				0.00	0.00	0.0	0.0	COMB
E	61808.3	9399.84	18465.70	557.17	38767.14	3296.90	0.0	1146.	
D	53746.4	12260.66	18769.82	763.88	40231.84	4722.94	0.0	1146.	
D	0.0				0.00	0.00	0.0	0.0	COMB
F	53746.4	8173.78	16057.13	484.50	33710.56	2866.87	0.0	1146.	

Additional Design Data

M	periphery-O/-I [m2/m]	[m2/m]	deff [mm]	t-min [mm]	t-max [mm]	SMP [o/o]	thet-p [tm2/m]	thet-y [tm2/m]	thet-z [tm2/m]	thet-yz [tm2/m]
	7.532		49.0	45.0	52.0	0.0	1.027	0.995	0.031	

SOFiSTiK AG - www.sofistik.de

Composite bridge 38+50+38, b=14.25m, 2x2HL1100R HISTAR460 , slab 0.30m C30/37

Cross section No. 169.2 = CS 10 - prefab. slab C1

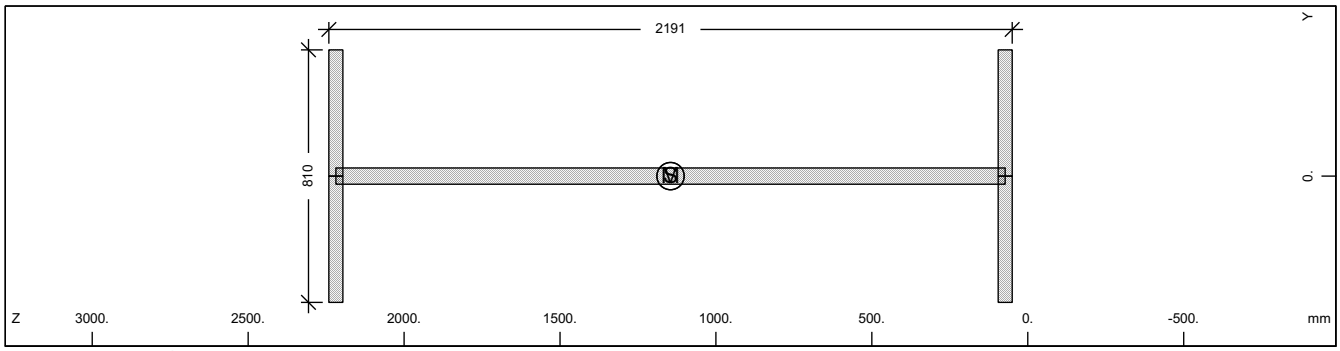

Cross section No. 169

Static properties of cross section

Mat / NoR	A[cm2] / It[cm4]	Ay/Az/Ayz [cm2]	Iy/Iz/Iyz [cm4]	ys/zs [mm]	modules [N/mm2]	gam [kN/m]
1	1845.02	607.50	12678593.	0.0	210000	14.48
	6270.0	1058.15	398580.9	1145.6	80769	

Additional static properties of cross section

Alfa-T [1/°K]	ymin / ymax [mm]	zmin / zmax [mm]	hymin / hzmin [mm]	AK / AB [cm2]	MB	Tau-T / Tau-B [1/m3]	Tau-Vy / Tau-Vz [1/m2]
1.2E-05	-405.0	-1095.6		1.108E+03		3.471E+02	2.058E+01
	405.0	1095.6				1.255E+02	1.047E+01

Section values for warping

Wmin[cm2]	Wmax[cm2]	CM[cm6]	CMS[cm4]	ASwyy[cm6]	ASwzz[cm6]	ry[mm]	rz[mm]
-4346.06	4346.064589834269.		6995631.1	0.45	14.39	0.0	0.0

Design values of cross section

Mat / NoR	A[cm2] / It[cm4]	Ay/Az/Ayz [cm2]	Iy/Iz/Iyz [cm4]	ys/zs [mm]	modules [N/mm2]	gam [kN/m]
1	1845.02	607.50	12678593.	0.0	182609	14.48
	6270.0	1058.15	398580.9	1145.6	70234	

Design forces and moments
(C/E = characteristic plastic/elastic, D=plast.Design, F=elast. Design)

	N[kN]	Vy[kN]	Vz[kN]	Mt[kNm]	My[kNm]	Mz[kNm]	y[mm]	z[mm]	BUCK
C	61808.3	14099.76	21585.29	878.46	46266.62	5431.38	0.0	1146.	c c
C	0.0				0.00	0.00	0.0	0.0	COMB
E	61808.3	9399.84	18465.70	557.17	38767.14	3296.90	0.0	1146.	
D	53746.4	12260.66	18769.82	763.88	40231.84	4722.94	0.0	1146.	
D	0.0				0.00	0.00	0.0	0.0	COMB
F	53746.4	8173.78	16057.13	484.50	33710.56	2866.87	0.0	1146.	

Additional Design Data

M	periphery-O/-I [m2/m]	[m2/m]	deff [mm]	t-min [mm]	t-max [mm]	SMP [o/o]	thet-p [tm2/m]	thet-y [tm2/m]	thet-z [tm2/m]	thet-yz [tm2/m]
	7.532		49.0	45.0	52.0	0.0	1.027	0.995	0.031	

SOFiSTiK AG - www.sofistik.de

Composite bridge 38+50+38, b=14.25m, 2x2HL1100R HISTAR460 , slab 0.30m C30/37

Cross section No. 169.3 = CS 20 - in-situ conc:C2

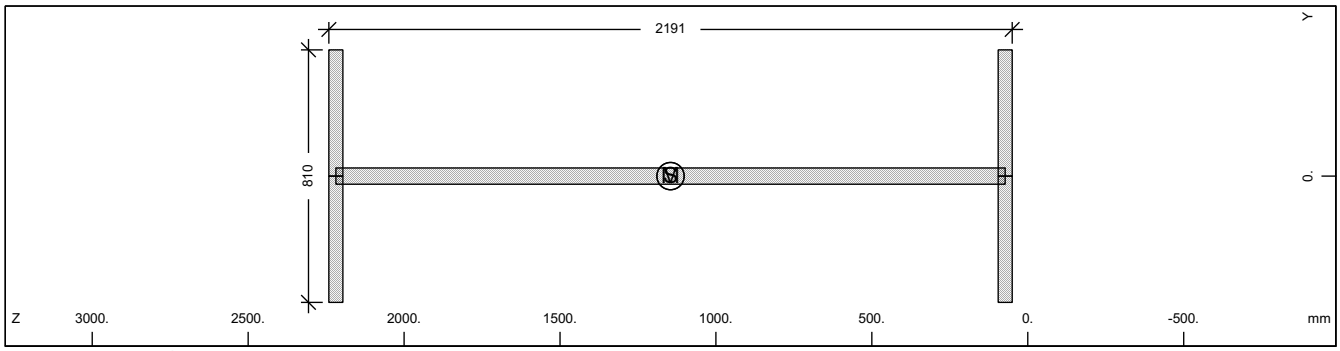

Cross section No. 169

Static properties of cross section

Mat / NoR	A[cm2] / It[cm4]	Ay/Az/Ayz [cm2]	Iy/Iz/Iyz [cm4]	ys/zs [mm]	modules [N/mm2]	gam [kN/m]
1	1845.02	607.50	12678593.	0.0	210000	14.48
	6270.0	1058.15	398580.9	1145.6	80769	

Additional static properties of cross section

Alfa-T [1/°K]	ymin / ymax [mm]	zmin / zmax [mm]	hymin / hzmin [mm]	AK / AB [cm2]	MB	Tau-T / Tau-B [1/m3]	Tau-Vy / Tau-Vz [1/m2]
1.2E-05	-405.0	-1095.6		1.108E+03		3.471E+02	2.058E+01
	405.0	1095.6				1.255E+02	1.047E+01

Section values for warping

Wmin[cm2]	Wmax[cm2]	CM[cm6]	CMS[cm4]	ASwyy[cm6]	ASwzz[cm6]	ry[mm]	rz[mm]
-4346.06	4346.064589834269.		6995631.1	0.45	14.39	0.0	0.0

Design values of cross section

Mat / NoR	A[cm2] / It[cm4]	Ay/Az/Ayz [cm2]	Iy/Iz/Iyz [cm4]	ys/zs [mm]	modules [N/mm2]	gam [kN/m]
1	1845.02	607.50	12678593.	0.0	182609	14.48
	6270.0	1058.15	398580.9	1145.6	70234	

Design forces and moments
(C/E = characteristic plastic/elastic, D=plast.Design, F=elast. Design)

	N[kN]	Vy[kN]	Vz[kN]	Mt[kNm]	My[kNm]	Mz[kNm]	y[mm]	z[mm]	BUCK
C	61808.3	14099.76	21585.29	878.46	46266.62	5431.38	0.0	1146.	c c
C	0.0				0.00	0.00	0.0	0.0	COMB
E	61808.3	9399.84	18465.70	557.17	38767.14	3296.90	0.0	1146.	
D	53746.4	12260.66	18769.82	763.88	40231.84	4722.94	0.0	1146.	
D	0.0				0.00	0.00	0.0	0.0	COMB
F	53746.4	8173.78	16057.13	484.50	33710.56	2866.87	0.0	1146.	

Additional Design Data

M	periphery-O/-I [m2/m]	[m2/m]	deff [mm]	t-min [mm]	t-max [mm]	SMP [o/o]	thet-p [tm2/m]	thet-y [tm2/m]	thet-z [tm2/m]	thet-yz [tm2/m]
	7.532		49.0	45.0	52.0	0.0	1.027	0.995	0.031	

SOFiSTiK AG - www.sofistik.de

Composite bridge 38+50+38, b=14.25m, 2x2HL1100R HISTAR460 , slab 0.30m C30/37

Cross section No. 169.4 = CS 21 - reinf active:C2

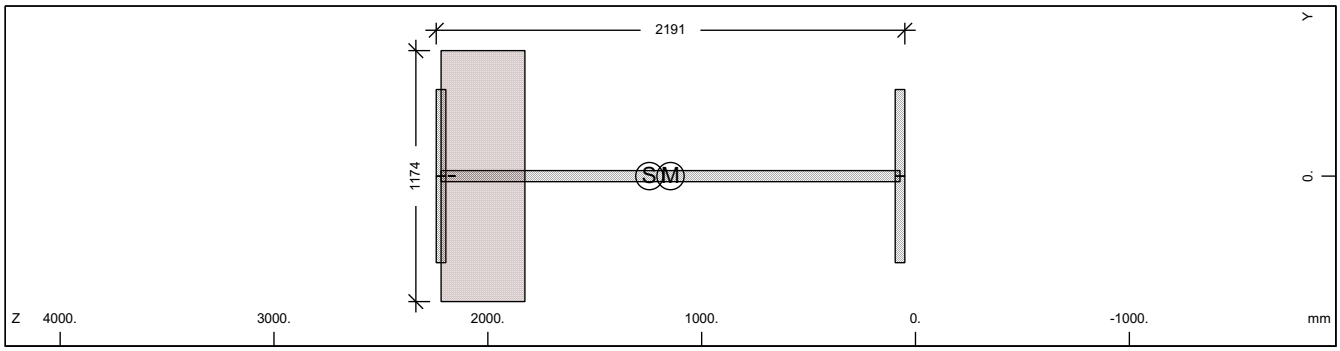

Cross section No. 169

Static properties of cross section

Mat NoR	A[cm2] It[cm4]	Ay/Az/Ayz [cm2]	Iy/Iz/Iyz [cm4]	ys/zs [mm]	modules [N/mm2]	gam [kN/m]
1	2079.51	607.50	14310248.	0.0	210000	25.99
	6270.0	1019.30	398580.9	1244.5	80769	

Additional static properties of cross section

Alfa-T [1/°K]	ymin ymax [mm]	zmin zmax [mm]	hymin hzmin [mm]	AK AB [cm2]	MB	Tau-T Tau-B [1/m3]	Tau-Vy Tau-Vz [1/m2]
1.2E-05	-587.0	-1194.5		3.109E+03		5.479E+00	2.058E+01
	587.0	996.7		4.604E+03		1.255E+02	1.054E+01

Section values for warping

Wmin[cm2]	Wmax[cm2]	CM[cm6]	CMS[cm4]	ASwyy[cm6]	ASwzz[cm6]	ry[mm]	rz[mm]
-4346.06	4346.06	4589834269.	6995631.1	-0.09	-3.17	0.0	13.1

Partial cross sections

Mat NoR	A[cm2] It[cm4]	Ay/Az/Ayz [cm2]	Iy/Iz/Iyz [cm4]	ys/zs [mm]	modules [N/mm2]	gam [kN/m]
1	1845.02	607.50	12678593.	0.0	210000	14.48
	14979.8	1016.31	398580.9	1145.6	80769	
25	4604.43		590216.3	0.0	10667	11.51
	21153936.	54.39	0.0	2022.6	4444	
210	0.64	0.00	0.0	0.0	200000	0.00
	2.2	0.00	0.0	2168.7	76923	

Design values of cross section

Mat NoR	A[cm2] It[cm4]	Ay/Az/Ayz [cm2]	Iy/Iz/Iyz [cm4]	ys/zs [mm]	modules [N/mm2]	gam [kN/m]
1	2024.94	607.50	13963984.	0.0	182609	25.99
	6270.0	1018.60	398580.9	1223.6	70234	

Design forces and moments
(C/E = characteristic plastic/elastic, D=plast.Design, F=elast. Design)

	N[kN]	Vy[kN]	Vz[kN]	Mt[kNm]	My[kNm]	Mz[kNm]	y[mm]	z[mm]	BUCK
C	61840.5	14118.33	29644.48	5345.77	46299.50	7506.06	4.6	1147.	c c
C	-3414.7				46466.84	0.00	0.0	1245.	COMB
C	-6906.7				0.00	7458.74	0.0	0.0	COMB
C	-75653.8	14118.33	29644.48	5345.77	-48713.1	-7442.97	-4.6	1516.	
C	-10398.6				-57214.5	0.00	0.0	1245.	COMB
C	-6906.7				0.00	-7458.74	0.0	0.0	COMB
E	69663.7	9399.84	18349.29	3011.35	40132.21	3296.90	0.0	1245.	
E	-69663.7	9399.84	18349.29	3011.35	-40132.2	-3296.90	0.0	1245.	
D	53774.3	12276.81	24236.33	3743.65	40260.43	6098.80	3.5	1147.	
D	-2969.3				40405.95	0.00	0.0	1245.	COMB
D	-4604.4				0.00	6074.57	0.0	0.0	COMB
D	-62983.2	12276.81	24236.33	3743.65	-41631.9	-6066.49	-3.5	1447.	
D	-6239.5				-47571.0	0.00	0.0	1245.	COMB
D	-4604.4				0.00	-6074.57	0.0	0.0	COMB

SOFiSTiK AG - www.sofistik.de

Composite bridge 38+50+38, b=14.25m, 2x2HL1100R HISTAR460 , slab 0.30m C30/37

Design forces and moments
(C/E = characteristic plastic/elastic, D=plast.Design, F=elast. Design)

	N[kN]	Vy[kN]	Vz[kN]	Mt[kNm]	My[kNm]	Mz[kNm]	y[mm]	z[mm]	BUCK
F	60577.1	8173.78	15955.91	2007.57	34897.57	2866.87	0.0	1245.	
F	-60577.1	8173.78	15955.91	2007.57	-34897.6	-2866.87	0.0	1245.	

Additional Design Data

M	periphery-O/-I [m2/m]	[m2/m]	deff [mm]	t-min [mm]	t-max [mm]	SMP [o/o]	thet-p [tm2/m]	thet-y [tm2/m]	thet-z [tm2/m]	thet-yz [tm2/m]
	8.321		50.0	32.0	392.2	0.0	1.535	1.503	0.031	
1	7.532		49.0	45.0	52.0	0.0	1.027	0.995	0.031	
25	0.784		1174.0			0.0	0.015	0.015		
**	0.004		32.0			0.0	0.000		0.000	

Cross section No. 169.5 = CS 30 - in-situ conc:C3

Cross section No. 170 - VFT (153)

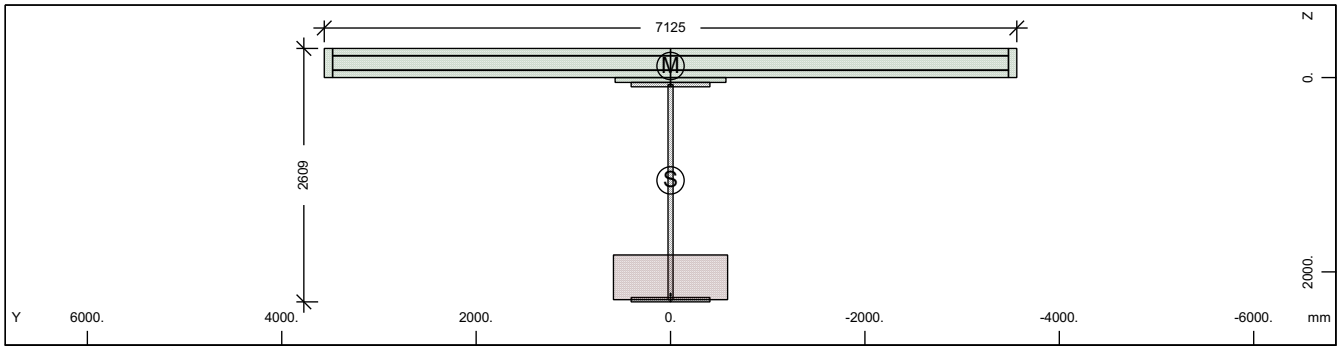

Cross section No. 170 - VFT (153)

Static properties of cross section

Mat NoR	A[cm2] It[cm4]	Ay/Az/Ayz [cm2]	Iy/Iz/Iyz [cm4]	ys/zs [mm]	y/z-sc [mm]	modules [N/mm2]	gam [kN/m]
1	2570.74	363.18	22789320.	0.0	0.0	210000	83.11
	6270.0	754.49	17162725.	1058.0	-119.1	80769	

Additional static properties of cross section

Alfa-T [1/°K]	ymin ymax [mm]	zmin zmax [mm]	hymin hzmin [mm]	AK AB [cm2]	MB	Tau-T Tau-B [1/m3]	Tau-Vy Tau-Vz [1/m2]
1.2E-05	-3562.5	-1358.0		3.638E+03		4.683E+00	3.355E+01
	3562.5	1250.6		2.734E+04		1.255E+02	1.864E+01

Section values for warping

Wmin[cm2]	Wmax[cm2]	CM[cm6]	CMS[cm4]	ASwyy[cm6]	ASwzz[cm6]	ry[mm]	rz[mm]
-9741.32	9741.32	1.271E+10	2648687.6	-205.26	-272.55	0.0	1487.9

Partial cross sections

Mat NoR	A[cm2] It[cm4]	Ay/Az/Ayz [cm2]	Iy/Iz/Iyz [cm4]	ys/zs [mm]	modules [N/mm2]	gam [kN/m]
1	1880.09	0.12	13631056.	0.0	210000	14.76
	15295.9	480.89	398580.9	1179.3	80769	
25	5396.13		950014.5	0.0	10667	13.49
	24791199.	31.49	0.0	2056.3	4444	
210	0.64	0.00	0.0	0.0	200000	0.00
	2.2	0.00	0.0	2236.1	76923	
31	21945.00	17515.45	170028.4	0.0	0	54.86
	6417251.4	12329.77	904880243.	-145.5	0	
300	436.74	381.22	24566.7	0.0	200000	0.00
	14.4	284.92	17602347.	-150.0	76923	

SOFiSTiK AG - www.sofistik.de

Composite bridge 38+50+38, b=14.25m, 2x2HL1100R HISTAR460 , slab 0.30m C30/37

Design values of cross section

Mat NoR	A[cm2] It[cm4]	Ay/Az/Ayz [cm2]	Iy/Iz/Iyz [cm4]	ys/zs [mm]	modules [N/mm2]	gam [kN/m]
1	2506.78	363.18	22124396.	0.0	182609	83.11
	6270.0	753.57	17162724.	1032.5	70234	

Design forces and moments
(C/E = characteristic plastic/elastic, D=plast.Design, F=elast. Design)

	N[kN]	Vy[kN]	Vz[kN]	Mt[kNm]	My[kNm]	Mz[kNm]	y[mm]	z[mm]	BUCK
C	84852.2	62935.19	60429.46	104717.0	86130.88	103040.9	26.6	-74.4	c c
C	-83412.9				154272.6	0.00	0.0	1058.	COMB
C	-41011.7				0.00	103143.8	0.0	0.0	COMB
C	-156644.	62935.19	60429.46	104717.0	-91177.3	-102610.	-26.6	1018.	
C	1389.5				-91205.0	0.00	0.0	1058.	COMB
C	-41011.7				0.00	-103144.	0.0	0.0	COMB
E	86119.7	8604.92	15483.60	3523.39	61043.91	25912.63	0.0	1058.	
E	-86119.7	8604.92	15483.60	3523.39	-61043.9	-25912.6	0.0	1058.	
D	73784.6	47379.45	45433.48	70012.25	73742.94	77513.43	20.0	-48.7	
D	-59175.1				118074.7	0.00	0.0	1058.	COMB
D	-27341.1				0.00	77571.02	0.0	0.0	COMB
D	-121646.	47379.45	45433.48	70012.26	-75696.5	-77297.3	-20.0	909.8	
D	4492.8				-76029.6	0.00	0.0	1058.	COMB
D	-27341.1				0.00	-77571.0	0.0	0.0	COMB
F	74886.7	7482.54	13464.00	2348.93	53081.66	22532.72	0.0	1058.	
F	-74886.7	7482.54	13464.00	2348.93	-53081.7	-22532.7	0.0	1058.	

Additional Design Data

M	periphery-O/-I [m2/m]	[m2/m]	deff [mm]	t-min [mm]	t-max [mm]	SMP [o/o]	thet-p [tm2/m]	thet-y [tm2/m]	thet-z [tm2/m]	thet-yz [tm2/m]
	52.938		9.7	3.1	459.6	0.0	29.962	7.309	22.653	
1	7.667		49.0	45.0	52.0	0.0	1.101	1.070	0.031	
25	0.919		1174.0			0.0	0.024	0.024		
**	0.004		32.0			0.0	0.000		0.000	
31	16.530		265.5	50.0	300.0	0.0	22.626	0.004	22.622	
**	27.818		3.1	3.1	3.1	0.0	0.000	0.000	0.000	

Cross section No. 170.1 = CS 1 - steel alone

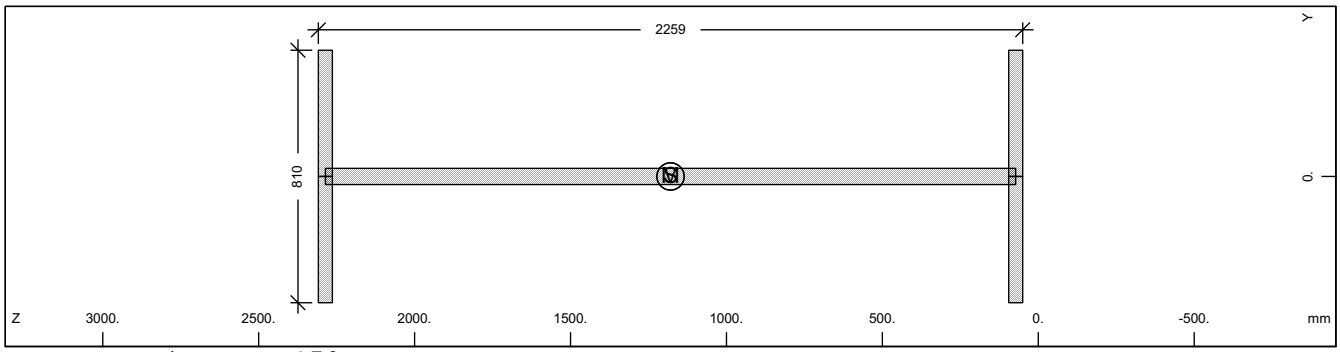

Cross section No. 170

Static properties of cross section

Mat NoR	A[cm2] It[cm4]	Ay/Az/Ayz [cm2]	Iy/Iz/Iyz [cm4]	ys/zs [mm]	modules [N/mm2]	gam [kN/m]
1	1880.09	607.50	13631056.	0.0	210000	14.76
	6270.0	1092.08	398580.9	1179.3	80769	

Additional static properties of cross section

Alfa-T [1/°K]	ymin ymax [mm]	zmin zmax [mm]	hymin hzmin [mm]	AK AB [cm2]	MB	Tau-T Tau-B [1/m3]	Tau-Vy Tau-Vz [1/m2]
1.2E-05	-405.0	-1129.3		1.131E+03		3.400E+02	2.058E+01
	405.0	1129.3				1.255E+02	1.019E+01

SOFiSTiK AG - www.sofistik.de

Composite bridge 38+50+38, b=14.25m, 2x2HL1100R HISTAR460 , slab 0.30m C30/37

Section values for warping

Wmin[cm2]	Wmax[cm2]	CM[cm6]	CMS[cm4]	ASwyy[cm6]	ASwzz[cm6]	ry[mm]	rz[mm]
-4482.61	4482.614882800878.	7442158.5		1.92	65.58	0.0	0.0

Design values of cross section

Mat NoR	A[cm2] It[cm4]	Ay/Az/Ayz [cm2]	Iy/Iz/Iyz [cm4]	ys/zs [mm]	modules [N/mm2]	gam [kN/m]
1	1880.09	607.50	13631056.	0.0	182609	14.76
	6270.0	1092.08	398580.9	1179.3	70234	

Design forces and moments
(C/E = characteristic plastic/elastic, D=plast.Design, F=elast. Design)

	N[kN]	Vy[kN]	Vz[kN]	Mt[kNm]	My[kNm]	Mz[kNm]	y[mm]	z[mm]	BUCK
C	62983.0	14099.76	22263.52	896.10	48370.48	5446.66	0.0	1179.	c c
C	0.0				0.00	0.00	0.0	0.0	COMB
E	62983.1	9399.84	18989.41	568.93	40435.05	3296.90	0.0	1179.	
D	54767.9	12260.66	19359.58	779.21	42061.28	4736.22	0.0	1179.	
D	0.0				0.00	0.00	0.0	0.0	COMB
F	54767.9	8173.78	16512.53	494.72	35160.91	2866.87	0.0	1179.	

Additional Design Data

M	periphery-O/-I [m2/m]	[m2/m]	deff [mm]	t-min [mm]	t-max [mm]	SMP [o/o]	thet-p [tm2/m]	thet-y [tm2/m]	thet-z [tm2/m]	thet-yz [tm2/m]
	7.667		49.0	45.0	52.0	0.0	1.101	1.070	0.031	

Cross section No. 170.2 = CS 10 - prefab. slab C1

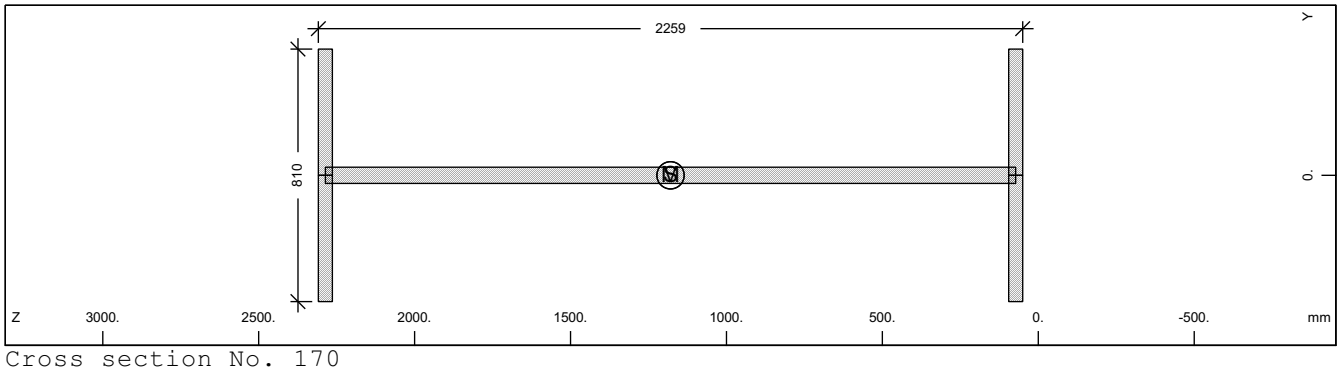

Cross section No. 170

Static properties of cross section

Mat NoR	A[cm2] It[cm4]	Ay/Az/Ayz [cm2]	Iy/Iz/Iyz [cm4]	ys/zs [mm]	modules [N/mm2]	gam [kN/m]
1	1880.09	607.50	13631056.	0.0	210000	14.76
	6270.0	1092.08	398580.9	1179.3	80769	

Additional static properties of cross section

Alfa-T [1/°K]	ymin ymax [mm]	zmin zmax [mm]	hymin hzmin [mm]	AK AB [cm2]	MB	Tau-T Tau-B [1/m3]	Tau-Vy Tau-Vz [1/m2]
1.2E-05	-405.0	-1129.3		1.131E+03		3.400E+02	2.058E+01
	405.0	1129.3				1.255E+02	1.019E+01

Section values for warping

Wmin[cm2]	Wmax[cm2]	CM[cm6]	CMS[cm4]	ASwyy[cm6]	ASwzz[cm6]	ry[mm]	rz[mm]
-4482.61	4482.614882800878.	7442158.5		1.92	65.58	0.0	0.0

Design values of cross section

Mat NoR	A[cm2] It[cm4]	Ay/Az/Ayz [cm2]	Iy/Iz/Iyz [cm4]	ys/zs [mm]	modules [N/mm2]	gam [kN/m]
1	1880.09	607.50	13631056.	0.0	182609	14.76
	6270.0	1092.08	398580.9	1179.3	70234	

SOFiSTiK AG - www.sofistik.de

Composite bridge 38+50+38, b=14.25m, 2x2HL1100R HISTAR460 , slab 0.30m C30/37

Design forces and moments
(C/E = characteristic plastic/elastic, D=plast.Design, F=elast. Design)

	N[kN]	Vy[kN]	Vz[kN]	Mt[kNm]	My[kNm]	Mz[kNm]	y[mm]	z[mm]	BUCK
C	62983.0	14099.76	22263.52	896.10	48370.48	5446.66	0.0	1179.	c c
C	0.0				0.00	0.00	0.0	0.0	COMB
E	62983.1	9399.84	18989.41	568.93	40435.05	3296.90	0.0	1179.	
D	54767.9	12260.66	19359.58	779.21	42061.28	4736.22	0.0	1179.	
D	0.0				0.00	0.00	0.0	0.0	COMB
F	54767.9	8173.78	16512.53	494.72	35160.91	2866.87	0.0	1179.	

Additional Design Data

M	periphery-O/-I [m2/m]	[m2/m]	deff [mm]	t-min [mm]	t-max [mm]	SMP [o/o]	thet-p [tm2/m]	thet-y [tm2/m]	thet-z [tm2/m]	thet-yz [tm2/m]
	7.667		49.0	45.0	52.0	0.0	1.101	1.070	0.031	

Cross section No. 170.3 = CS 20 - in-situ conc:C2

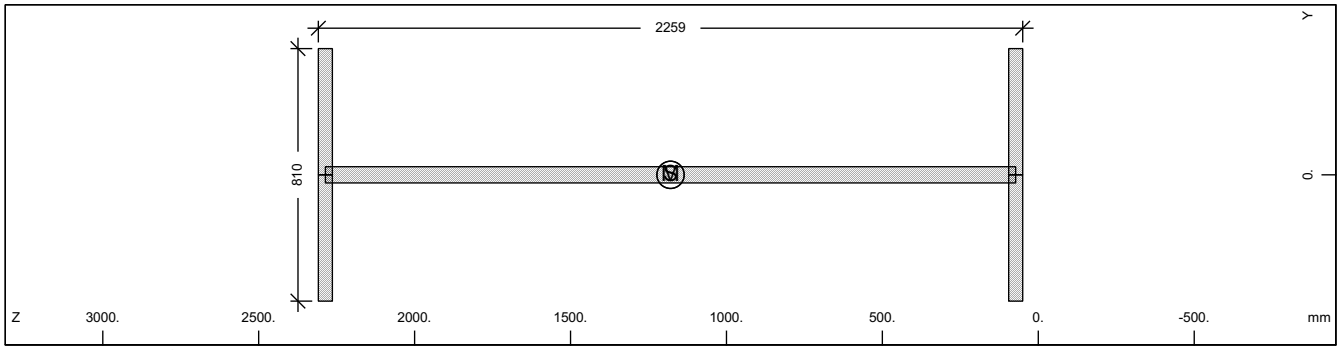

Cross section No. 170

Static properties of cross section

Mat NoR	A[cm2] It[cm4]	Ay/Az/Ayz [cm2]	Iy/Iz/Iyz [cm4]	ys/zs [mm]	modules [N/mm2]	gam [kN/m]
1	1880.09	607.50	13631056.	0.0	210000	14.76
	6270.0	1092.08	398580.9	1179.3	80769	

Additional static properties of cross section

Alfa-T [1/°K]	ymin ymax [mm]	zmin zmax [mm]	hymin hzmin [mm]	AK AB [cm2]	MB	Tau-T Tau-B [1/m3]	Tau-Vy Tau-Vz [1/m2]
1.2E-05	-405.0	-1129.3		1.131E+03		3.400E+02	2.058E+01
	405.0	1129.3				1.255E+02	1.019E+01

Section values for warping

Wmin[cm2]	Wmax[cm2]	CM[cm6]	CMS[cm4]	ASwyy[cm6]	ASwzz[cm6]	ry[mm]	rz[mm]
-4482.61	4482.614882800878.		7442158.5	1.92	65.58	0.0	0.0

Design values of cross section

Mat NoR	A[cm2] It[cm4]	Ay/Az/Ayz [cm2]	Iy/Iz/Iyz [cm4]	ys/zs [mm]	modules [N/mm2]	gam [kN/m]
1	1880.09	607.50	13631056.	0.0	182609	14.76
	6270.0	1092.08	398580.9	1179.3	70234	

Design forces and moments
(C/E = characteristic plastic/elastic, D=plast.Design, F=elast. Design)

	N[kN]	Vy[kN]	Vz[kN]	Mt[kNm]	My[kNm]	Mz[kNm]	y[mm]	z[mm]	BUCK
C	62983.0	14099.76	22263.52	896.10	48370.48	5446.66	0.0	1179.	c c
C	0.0				0.00	0.00	0.0	0.0	COMB
E	62983.1	9399.84	18989.41	568.93	40435.05	3296.90	0.0	1179.	
D	54767.9	12260.66	19359.58	779.21	42061.28	4736.22	0.0	1179.	
D	0.0				0.00	0.00	0.0	0.0	COMB
F	54767.9	8173.78	16512.53	494.72	35160.91	2866.87	0.0	1179.	

SOFiSTiK AG - www.sofistik.de

Composite bridge 38+50+38, b=14.25m, 2x2HL1100R HISTAR460 , slab 0.30m C30/37

Additional Design Data

M	periphery-O/-I [m2/m]	[m2/m]	deff [mm]	t-min [mm]	t-max [mm]	SMP [o/o]	thet-p [tm2/m]	thet-y [tm2/m]	thet-z [tm2/m]	thet-yz [tm2/m]
	7.667		49.0	45.0	52.0	0.0	1.101	1.070	0.031	

Cross section No. 170.4 = CS 21 - reinf active:C2

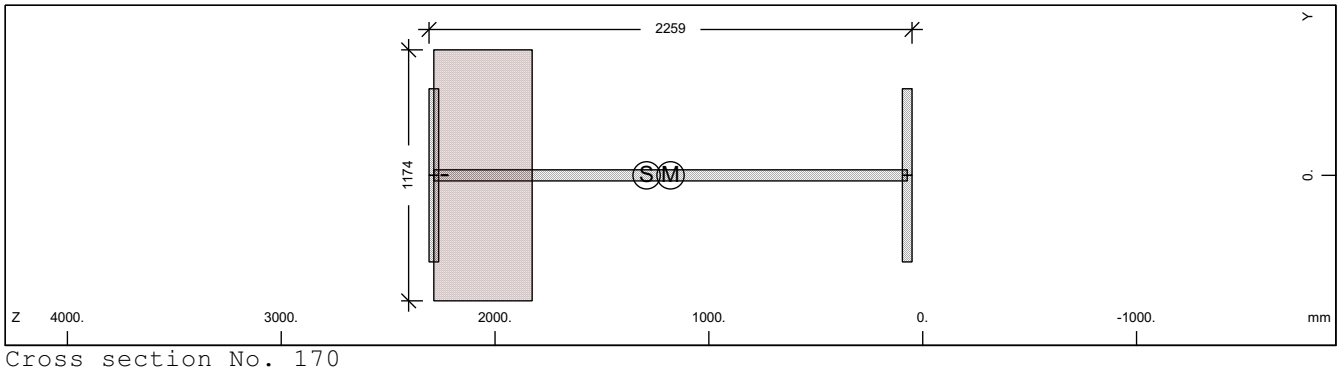

Cross section No. 170

Static properties of cross section

Mat NoR	A[cm2] It[cm4]	Ay/Az/Ayz [cm2]	Iy/Iz/Iyz [cm4]	ys/zs [mm]	modules [N/mm2]	gam [kN/m]
1	2154.79	607.50	15524656.	0.0	210000	28.25
	6270.0	1041.08	398580.9	1291.2	80769	

Additional static properties of cross section

Alfa-T [1/°K]	ymin ymax [mm]	zmin zmax [mm]	hymin hzmin [mm]	AK AB [cm2]	MB	Tau-T Tau-B [1/m3]	Tau-Vy Tau-Vz [1/m2]
1.2E-05	-587.0	-1241.2		3.638E+03		4.683E+00	2.058E+01
	587.0	1017.5		5.396E+03		1.255E+02	1.029E+01

Section values for warping

Wmin[cm2]	Wmax[cm2]	CM[cm6]	CMS[cm4]	ASwyy[cm6]	ASwzz[cm6]	ry[mm]	rz[mm]
-4482.61	4482.614882800878.		7442158.5	2.09	81.60	0.0	11.1

Partial cross sections

Mat NoR	A[cm2] It[cm4]	Ay/Az/Ayz [cm2]	Iy/Iz/Iyz [cm4]	ys/zs [mm]	modules [N/mm2]	gam [kN/m]
1	1880.09	607.50	13631056.	0.0	210000	14.76
	15295.9	1037.05	398580.9	1179.3	80769	
25	5396.13		950014.5	0.0	10667	13.49
	24791199.	73.21	0.0	2056.3	4444	
210	0.64	0.00	0.0	0.0	200000	0.00
	2.2	0.00	0.0	2236.1	76923	

Design values of cross section

Mat NoR	A[cm2] It[cm4]	Ay/Az/Ayz [cm2]	Iy/Iz/Iyz [cm4]	ys/zs [mm]	modules [N/mm2]	gam [kN/m]
1	2090.84	607.50	15127525.	0.0	182609	28.25
	6270.0	1040.14	398580.9	1267.8	70234	

Design forces and moments
(C/E = characteristic plastic/elastic, D=plast.Design, F=elast. Design)

	N[kN]	Vy[kN]	Vz[kN]	Mt[kNm]	My[kNm]	Mz[kNm]	y[mm]	z[mm]	BUCK
C	63015.2	14118.33	31629.02	6130.21	48404.44	7885.59	5.2	1180.	c c
C	-3864.9				48618.81	0.00	0.0	1291.	COMB
C	-8094.2				0.00	7822.56	0.0	0.0	COMB
C	-79203.6	14118.33	31629.02	6130.21	-51511.2	-7801.55	-5.2	1595.	
C	-12323.5				-61005.3	0.00	0.0	1291.	COMB
C	-8094.2				0.00	-7822.56	0.0	0.0	COMB
E	72185.6	9399.84	18803.94	3523.36	41901.98	3296.90	0.0	1291.	
E	-72185.6	9399.84	18803.94	3523.36	-41902.0	-3296.90	0.0	1291.	
D	54795.8	12276.81	25696.96	4270.18	42090.82	6352.49	4.0	1180.	

SOFiSTiK AG - www.sofistik.de

Composite bridge 38+50+38, b=14.25m, 2x2HL1100R HISTAR460 , slab 0.30m C30/37

Design forces and moments
(C/E = characteristic plastic/elastic, D=plast.Design, F=elast. Design)

	N[kN]	Vy[kN]	Vz[kN]	Mt[kNm]	My[kNm]	Mz[kNm]	y[mm]	z[mm]	BUCK
D	-3360.8				42277.22	0.00	0.0	1291.	COMB
D	-5396.1				0.00	6320.21	0.0	0.0	COMB
D	-65588.1	12276.81	25696.96	4270.18	-43859.9	-6309.45	-4.0	1521.	
D	-7431.5				-50534.9	0.00	0.0	1291.	COMB
D	-5396.1				0.00	-6320.21	0.0	0.0	COMB
F	62770.1	8173.78	16351.25	2348.90	36436.50	2866.87	0.0	1291.	
F	-62770.1	8173.78	16351.25	2348.90	-36436.5	-2866.87	0.0	1291.	

Additional Design Data

M	periphery-O/-I [m2/m]	[m2/m]	deff [mm]	t-min [mm]	t-max [mm]	SMP [o/o]	thet-p [tm2/m]	thet-y [tm2/m]	thet-z [tm2/m]	thet-yz [tm2/m]
	8.591		50.2	32.0	459.6	0.0	1.667	1.636	0.031	
1	7.667		49.0	45.0	52.0	0.0	1.101	1.070	0.031	
25	0.919		1174.0			0.0	0.024	0.024		
**	0.004		32.0			0.0	0.000		0.000	

Cross section No. 170.5 = CS 30 - in-situ conc:C3

Cross section No. 171 - VFT (153)

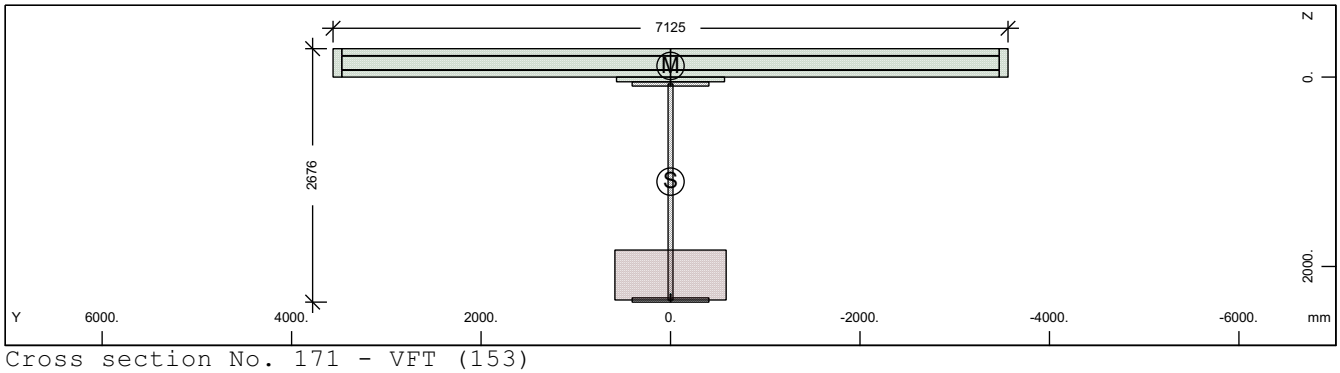

Cross section No. 171 - VFT (153)

Static properties of cross section

Mat NoR	A[cm2] It[cm4]	Ay/Az/Ayz [cm2]	Iy/Iz/Iyz [cm4]	ys/zs [mm]	y/z-sc [mm]	modules [N/mm2]	gam [kN/m]
1	2645.19	362.56	24542517.	0.0	0.0	210000	85.37
	6270.0	784.34	17062970.	1103.6	-118.2	80769	

Additional static properties of cross section

Alfa-T [1/°K]	ymin ymax [mm]	zmin zmax [mm]	hymin hzmin [mm]	AK AB [cm2]	MB	Tau-T Tau-B [1/m3]	Tau-Vy Tau-Vz [1/m2]
1.2E-05	-3562.5	-1403.6		4.166E+03		4.089E+00	3.361E+01
	3562.5	1272.5		2.813E+04		1.255E+02	1.789E+01

Section values for warping

Wmin[cm2]	Wmax[cm2]	CM[cm6]	CMS[cm4]	ASwyy[cm6]	ASwzz[cm6]	ry[mm]	rz[mm]
-10010.52	10010.52	1.335E+10	2907859.0	-216.08	-310.80	0.0	1586.1

Partial cross sections

Mat NoR	A[cm2] It[cm4]	Ay/Az/Ayz [cm2]	Iy/Iz/Iyz [cm4]	ys/zs [mm]	modules [N/mm2]	gam [kN/m]
1	1915.16	0.12	14626265.	0.0	210000	15.03
	15612.0	510.89	398580.9	1213.0	80769	
25	6187.83		1432508.4	0.0	10667	15.47
	28428450.	42.39	0.0	2090.0	4444	
210	0.64	0.00	0.0	0.0	200000	0.00
	2.2	0.00	0.0	2303.6	76923	
31	21945.00	17660.19	170028.4	0.0	0	54.86
	6417251.4	12372.99	904880243.	-145.5	0	

SOFiSTiK AG - www.sofistik.de

Composite bridge 38+50+38, b=14.25m, 2x2HL1100R HISTAR460 , slab 0.30m C30/37

300	435.87	380.56	24517.8	0.0	200000	0.00
	14.3	284.14	17497604.	-150.0	76923	

Design values of cross section

Mat	A[cm2]	Ay/Az/Ayz	Iy/Iz/Iyz	ys/zs	modules	gam
NoR	It[cm4]	[cm2]	[cm4]	[mm]	[N/mm2]	[kN/m]
1	2571.85	362.56	23791561.	0.0	182609	85.37
	6270.0	783.29	17062970.	1075.5	70234	

Design forces and moments
(C/E = characteristic plastic/elastic, D=plast.Design, F=elast. Design)

	N[kN]	Vy[kN]	Vz[kN]	Mt[kNm]	My[kNm]	Mz[kNm]	y[mm]	z[mm]	BUCK
C	85983.6	62910.14	62414.00	105501.4	89765.76	103294.1	26.2	-74.3	c c
C	-83783.4				160312.2	0.00	0.0	1104.	COMB
C	-42199.2				0.00	103356.9	0.0	0.0	COMB
C	-159321.	62910.14	62413.99	105501.4	-96387.9	-102808.	-26.2	1121.	
C	-615.1				-96393.3	0.00	0.0	1104.	COMB
C	-42199.2				0.00	-103357.	0.0	0.0	COMB
E	88613.9	8589.01	16134.56	4035.40	64611.80	25813.32	0.0	1104.	
E	-88613.9	8589.01	16134.56	4035.40	-64611.8	-25813.3	0.0	1104.	
D	74768.3	47357.66	46894.11	70538.75	76872.62	77651.80	20.0	-41.3	
D	-59497.3				122717.4	0.00	0.0	1104.	COMB
D	-28132.8				0.00	77685.57	0.0	0.0	COMB
D	-123660.	47357.66	46894.11	70538.73	-79932.5	-77404.1	-20.0	997.1	
D	3231.6				-80104.8	0.00	0.0	1104.	COMB
D	-28132.8				0.00	-77685.6	0.0	0.0	COMB
F	77055.5	7468.71	14030.05	2690.26	56184.17	22446.37	0.0	1104.	
F	-77055.5	7468.71	14030.05	2690.26	-56184.2	-22446.4	0.0	1104.	

Additional Design Data

M	periphery-O/-I		deff	t-min	t-max	SMP	thet-p	thet-y	thet-z	thet-yz
	[m2/m]	[m2/m]	[mm]	[mm]	[mm]	[o/o]	[tm2/m]	[tm2/m]	[tm2/m]	[tm2/m]
	53.153		10.0	3.1	527.1	0.0	30.803	8.149	22.653	
1	7.802		49.1	45.0	52.0	0.0	1.179	1.148	0.031	
25	1.054		1174.0			0.0	0.036	0.036		
**	0.004		32.0			0.0	0.000		0.000	
31	16.530		265.5	50.0	300.0	0.0	22.626	0.004	22.622	
**	27.763		3.1	3.1	3.1	0.0	0.000	0.000	0.000	

Cross section No. 171.1 = CS 1 - steel alone

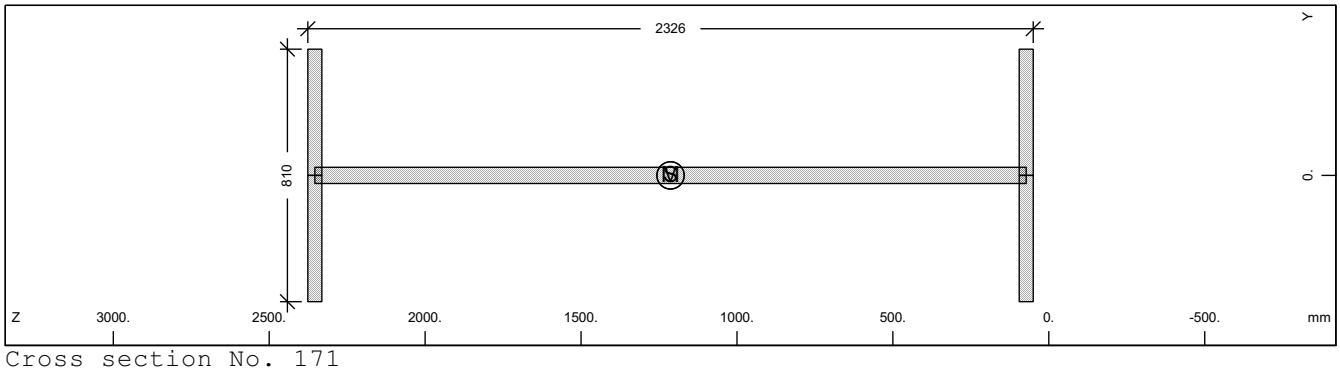

Cross section No. 171

Static properties of cross section

Mat	A[cm2]	Ay/Az/Ayz	Iy/Iz/Iyz	ys/zs	modules	gam
NoR	It[cm4]	[cm2]	[cm4]	[mm]	[N/mm2]	[kN/m]
1	1915.16	607.50	14626265.	0.0	210000	15.03
	6270.0	1125.94	398580.9	1213.0	80769	

SOFiSTiK AG - www.sofistik.de

Composite bridge 38+50+38, b=14.25m, 2x2HL1100R HISTAR460 , slab 0.30m C30/37

Additional static properties of cross section

Alfa-T	ymin ymax	zmin zmax	hymin hzmin	AK AB	MB	Tau-T Tau-B	Tau-Vy Tau-Vz
[1/°K]	[mm]	[mm]	[mm]	[cm2]		[1/m3]	[1/m2]
1.2E-05	-405.0	-1163.0		1.155E+03		3.331E+02	2.058E+01
	405.0	1163.0				1.255E+02	9.913E+00

Section values for warping

Wmin[cm2]	Wmax[cm2]	CM[cm6]	CMS[cm4]	ASwyy[cm6]	ASwzz[cm6]	ry[mm]	rz[mm]
-4619.17	4619.175184829256.	7902497.1		5.34	196.02	0.0	0.0

Design values of cross section

Mat NoR	A[cm2] It[cm4]	Ay/Az/Ayz [cm2]	Iy/Iz/Iyz [cm4]	ys/zs [mm]	modules [N/mm2]	gam [kN/m]
1	1915.16	607.50	14626265.	0.0	182609	15.03
	6270.0	1125.94	398580.9	1213.0	70234	

Design forces and moments
(C/E = characteristic plastic/elastic, D=plast.Design, F=elast. Design)

	N[kN]	Vy[kN]	Vz[kN]	Mt[kNm]	My[kNm]	Mz[kNm]	y[mm]	z[mm]	BUCK
C	64157.8	14099.76	22941.75	913.73	50513.93	5461.93	0.0	1213.	c c
C	0.0				0.00	0.00	0.0	0.0	COMB
E	64157.8	9399.84	19511.23	580.68	42129.38	3296.90	0.0	1213.	
D	55789.4	12260.66	19949.35	794.55	43925.16	4749.50	0.0	1213.	
D	0.0				0.00	0.00	0.0	0.0	COMB
F	55789.4	8173.78	16966.29	504.94	36634.24	2866.87	0.0	1213.	

Additional Design Data

M	periphery-O/-I [m2/m]	[m2/m]	deff [mm]	t-min [mm]	t-max [mm]	SMP [o/o]	thet-p [tm2/m]	thet-y [tm2/m]	thet-z [tm2/m]	thet-yz [tm2/m]
	7.802		49.1	45.0	52.0	0.0	1.179	1.148	0.031	

Cross section No. 171.2 = CS 10 - prefab. slab C1

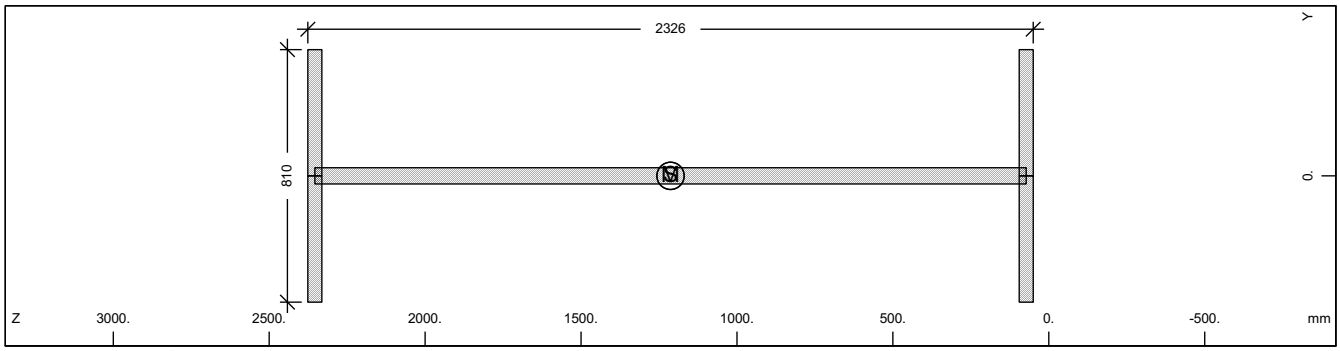

Cross section No. 171

Static properties of cross section

Mat NoR	A[cm2] It[cm4]	Ay/Az/Ayz [cm2]	Iy/Iz/Iyz [cm4]	ys/zs [mm]	modules [N/mm2]	gam [kN/m]
1	1915.16	607.50	14626265.	0.0	210000	15.03
	6270.0	1125.94	398580.9	1213.0	80769	

Additional static properties of cross section

Alfa-T	ymin ymax	zmin zmax	hymin hzmin	AK AB	MB	Tau-T Tau-B	Tau-Vy Tau-Vz
[1/°K]	[mm]	[mm]	[mm]	[cm2]		[1/m3]	[1/m2]
1.2E-05	-405.0	-1163.0		1.155E+03		3.331E+02	2.058E+01
	405.0	1163.0				1.255E+02	9.913E+00

Section values for warping

Wmin[cm2]	Wmax[cm2]	CM[cm6]	CMS[cm4]	ASwyy[cm6]	ASwzz[cm6]	ry[mm]	rz[mm]
-4619.17	4619.175184829256.	7902497.1		5.34	196.02	0.0	0.0

SOFiSTiK AG - www.sofistik.de

Composite bridge 38+50+38, b=14.25m, 2x2HL1100R HISTAR460 , slab 0.30m C30/37

Design values of cross section

Mat NoR	A[cm2] It[cm4]	Ay/Az/Ayz [cm2]	Iy/Iz/Iyz [cm4]	ys/zs [mm]	modules [N/mm2]	gam [kN/m]
1	1915.16	607.50	14626265.	0.0	182609	15.03
	6270.0	1125.94	398580.9	1213.0	70234	

Design forces and moments
(C/E = characteristic plastic/elastic, D=plast.Design, F=elast. Design)

	N[kN]	Vy[kN]	Vz[kN]	Mt[kNm]	My[kNm]	Mz[kNm]	y[mm]	z[mm]	BUCK
C	64157.8	14099.76	22941.75	913.73	50513.93	5461.93	0.0	1213.	c c
C	0.0				0.00	0.00	0.0	0.0	COMB
E	64157.8	9399.84	19511.23	580.68	42129.38	3296.90	0.0	1213.	
D	55789.4	12260.66	19949.35	794.55	43925.16	4749.50	0.0	1213.	
D	0.0				0.00	0.00	0.0	0.0	COMB
F	55789.4	8173.78	16966.29	504.94	36634.24	2866.87	0.0	1213.	

Additional Design Data

M	periphery-O/-I [m2/m] [m2/m]	deff [mm]	t-min [mm]	t-max [mm]	SMP [o/o]	thet-p [tm2/m]	thet-y [tm2/m]	thet-z [tm2/m]	thet-yz [tm2/m]
	7.802	49.1	45.0	52.0	0.0	1.179	1.148	0.031	

Cross section No. 171.3 = CS 20 - in-situ conc:C2

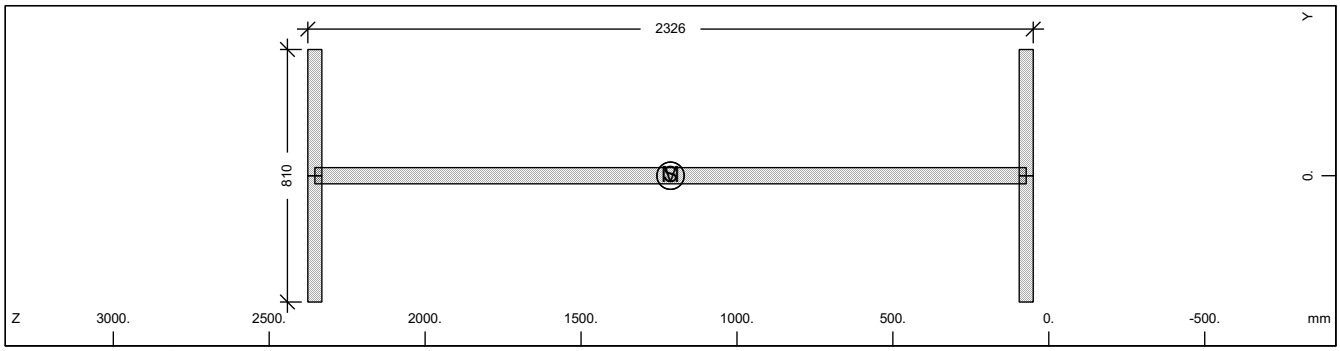

Cross section No. 171

Static properties of cross section

Mat NoR	A[cm2] It[cm4]	Ay/Az/Ayz [cm2]	Iy/Iz/Iyz [cm4]	ys/zs [mm]	modules [N/mm2]	gam [kN/m]
1	1915.16	607.50	14626265.	0.0	210000	15.03
	6270.0	1125.94	398580.9	1213.0	80769	

Additional static properties of cross section

Alfa-T [1/°K]	ymin ymax [mm]	zmin zmax [mm]	hymin hzmin [mm]	AK AB [cm2]	MB	Tau-T Tau-B [1/m3]	Tau-Vy Tau-Vz [1/m2]
1.2E-05	-405.0	-1163.0		1.155E+03		3.331E+02	2.058E+01
	405.0	1163.0				1.255E+02	9.913E+00

Section values for warping

Wmin[cm2]	Wmax[cm2]	CM[cm6]	CMS[cm4]	ASwyy[cm6]	ASwzz[cm6]	ry[mm]	rz[mm]
-4619.17	4619.175184829256.	7902497.1		5.34	196.02	0.0	0.0

Design values of cross section

Mat NoR	A[cm2] It[cm4]	Ay/Az/Ayz [cm2]	Iy/Iz/Iyz [cm4]	ys/zs [mm]	modules [N/mm2]	gam [kN/m]
1	1915.16	607.50	14626265.	0.0	182609	15.03
	6270.0	1125.94	398580.9	1213.0	70234	

Design forces and moments
(C/E = characteristic plastic/elastic, D=plast.Design, F=elast. Design)

	N[kN]	Vy[kN]	Vz[kN]	Mt[kNm]	My[kNm]	Mz[kNm]	y[mm]	z[mm]	BUCK
C	64157.8	14099.76	22941.75	913.73	50513.93	5461.93	0.0	1213.	c c
C	0.0				0.00	0.00	0.0	0.0	COMB
E	64157.8	9399.84	19511.23	580.68	42129.38	3296.90	0.0	1213.	

SOFiSTiK AG - www.sofistik.de

Composite bridge 38+50+38, b=14.25m, 2x2HL1100R HISTAR460 , slab 0.30m C30/37

Design forces and moments
(C/E = characteristic plastic/elastic, D=plast.Design, F=elast. Design)

	N[kN]	Vy[kN]	Vz[kN]	Mt[kNm]	My[kNm]	Mz[kNm]	y[mm]	z[mm]	BUCK
D	55789.4	12260.66	19949.35	794.55	43925.16	4749.50	0.0	1213.	
D	0.0				0.00	0.00	0.0	0.0	COMB
F	55789.4	8173.78	16966.29	504.94	36634.24	2866.87	0.0	1213.	

Additional Design Data

M	periphery-O/-I [m2/m]	[m2/m]	deff [mm]	t-min [mm]	t-max [mm]	SMP [o/o]	thet-p [tm2/m]	thet-y [tm2/m]	thet-z [tm2/m]	thet-yz [tm2/m]
	7.802		49.1	45.0	52.0	0.0	1.179	1.148	0.031	

Cross section No. 171.4 = CS 21 - reinf active:C2

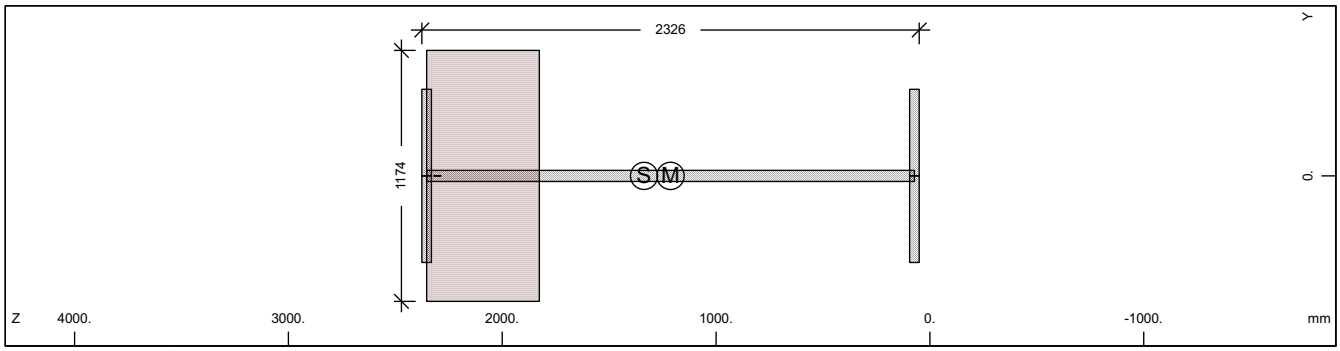

Cross section No. 171

Static properties of cross section

Mat NoR	A[cm2] It[cm4]	Ay/Az/Ayz [cm2]	Iy/Iz/Iyz [cm4]	ys/zs [mm]	modules [N/mm2]	gam [kN/m]
1	2230.07	607.50	16781347.	0.0	210000	30.50
	6270.0	1062.51	398580.9	1336.9	80769	

Additional static properties of cross section

Alfa-T [1/°K]	ymin ymax [mm]	zmin zmax [mm]	hymin hzmin [mm]	AK AB [cm2]	MB	Tau-T Tau-B [1/m3]	Tau-Vy Tau-Vz [1/m2]
1.2E-05	-587.0	-1286.9		4.166E+03		4.089E+00	2.058E+01
	587.0	1039.1		6.188E+03		1.255E+02	1.005E+01

Section values for warping

Wmin[cm2]	Wmax[cm2]	CM[cm6]	CMS[cm4]	ASwyy[cm6]	ASwzz[cm6]	ry[mm]	rz[mm]
-4619.17	4619.175184829721.		7902497.8	-1.40	-58.94	0.0	8.8

Partial cross sections

Mat NoR	A[cm2] It[cm4]	Ay/Az/Ayz [cm2]	Iy/Iz/Iyz [cm4]	ys/zs [mm]	modules [N/mm2]	gam [kN/m]
1	1915.16	607.50	14626265.	0.0	210000	15.03
	15612.0	1057.40	398580.9	1213.0	80769	
25	6187.83		1432508.4	0.0	10667	15.47
	28428450.	92.94	0.0	2090.0	4444	
210	0.64	0.00	0.0	0.0	200000	0.00
	2.2	0.00	0.0	2303.6	76923	

Design values of cross section

Mat NoR	A[cm2] It[cm4]	Ay/Az/Ayz [cm2]	Iy/Iz/Iyz [cm4]	ys/zs [mm]	modules [N/mm2]	gam [kN/m]
1	2156.74	607.50	16334288.	0.0	182609	30.50
	6270.0	1061.32	398580.9	1311.3	70234	

Design forces and moments
(C/E = characteristic plastic/elastic, D=plast.Design, F=elast. Design)

	N[kN]	Vy[kN]	Vz[kN]	Mt[kNm]	My[kNm]	Mz[kNm]	y[mm]	z[mm]	BUCK
C	64189.9	14118.33	33613.55	6914.64	50548.98	8266.82	5.8	1214.	c c
C	-4284.6				50812.44	0.00	0.0	1337.	COMB

SOFiSTiK AG - www.sofistik.de

Composite bridge 38+50+38, b=14.25m, 2x2HL1100R HISTAR460 , slab 0.30m C30/37

Design forces and moments
(C/E = characteristic plastic/elastic, D=plast.Design, F=elast. Design)

	N[kN]	Vy[kN]	Vz[kN]	Mt[kNm]	My[kNm]	Mz[kNm]	y[mm]	z[mm]	BUCK
C	-9281.7				0.00	8186.38	0.0	0.0	COMB
C	-82753.4	14118.33	33613.55	6914.64	-54403.8	-8159.56	-5.8	1671.	
C	-14278.9				-64792.6	0.00	0.0	1337.	COMB
C	-9281.7				0.00	-8186.38	0.0	0.0	COMB
E	74707.4	9399.84	19254.14	4035.36	43683.15	3296.90	0.0	1337.	
E	-74707.4	9399.84	19254.14	4035.36	-43683.2	-3296.90	0.0	1337.	
D	55817.3	12276.81	27157.59	4796.71	43955.64	6607.06	4.4	1214.	
D	-3725.7				44184.73	0.00	0.0	1337.	COMB
D	-6187.8				0.00	6565.85	0.0	0.0	COMB
D	-68193.0	12276.81	27157.59	4796.71	-46156.9	-6552.12	-4.4	1592.	
D	-8649.9				-53504.8	0.00	0.0	1337.	COMB
D	-6187.8				0.00	-6565.85	0.0	0.0	COMB
F	64963.0	8173.78	16742.73	2690.24	37985.35	2866.87	0.0	1337.	
F	-64963.0	8173.78	16742.73	2690.24	-37985.3	-2866.87	0.0	1337.	

Additional Design Data

M	periphery-O/-I [m2/m]	[m2/m]	deff [mm]	t-min [mm]	t-max [mm]	SMP [o/o]	thet-p [tm2/m]	thet-y [tm2/m]	thet-z [tm2/m]	thet-yz [tm2/m]
	8.860		50.3	32.0	527.1	0.0	1.802	1.770	0.031	
1	7.802		49.1	45.0	52.0	0.0	1.179	1.148	0.031	
25	1.054		1174.0			0.0	0.036	0.036		
**	0.004		32.0			0.0	0.000		0.000	

Cross section No. 171.5 = CS 30 - in-situ conc:C3

Cross section No. 172 - VFT (153)

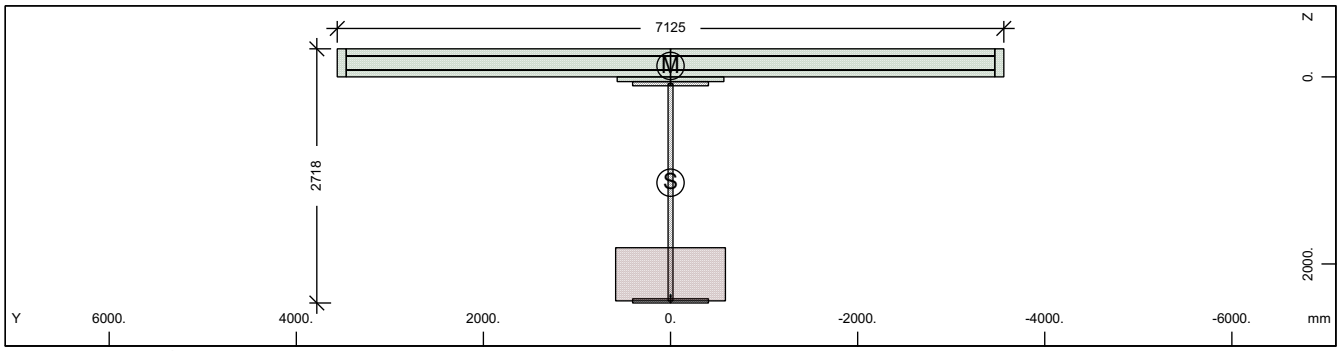

Cross section No. 172 - VFT (153)

Static properties of cross section

Mat NoR	A[cm2] It[cm4]	Ay/Az/Ayz [cm2]	Iy/Iz/Iyz [cm4]	ys/zs [mm]	y/z-sc [mm]	modules [N/mm2]	gam [kN/m]
1	2690.98	362.18	25646350.	0.0	0.0	210000	86.75
	6270.0	802.43	17001812.	1131.3	-117.6	80769	

Additional static properties of cross section

Alfa-T [1/°K]	ymin ymax [mm]	zmin zmax [mm]	hymin hzmin [mm]	AK AB [cm2]	MB	Tau-T Tau-B [1/m3]	Tau-Vy Tau-Vz [1/m2]
1.2E-05	-3562.5	-1431.3		4.492E+03		3.793E+00	3.365E+01
	3562.5	1286.2		2.862E+04		1.255E+02	1.746E+01

Section values for warping

Wmin[cm2]	Wmax[cm2]	CM[cm6]	CMS[cm4]	ASwyy[cm6]	ASwzz[cm6]	ry[mm]	rz[mm]
-10176.06	10176.06	1.376E+10	3075750.9	-77.75	-117.28	0.0	1645.1

SOFiSTiK AG - www.sofistik.de

Composite bridge 38+50+38, b=14.25m, 2x2HL1100R HISTAR460 , slab 0.30m C30/37

Partial cross sections

Mat NoR	A[cm2] It[cm4]	Ay/Az/Ayz [cm2]	Iy/Iz/Iyz [cm4]	ys/zs [mm]	modules [N/mm2]	gam [kN/m]
1	1936.73	0.12	15259948.	0.0	210000	15.20
	15806.4	529.24	398580.9	1233.8	80769	
25	6674.76		1798000.6	0.0	10667	16.69
	30665547.	49.68	0.0	2110.8	4444	
210	0.64	0.00	0.0	0.0	200000	0.00
	2.2	0.00	0.0	2345.0	76923	
31	21945.00	17749.96	170028.4	0.0	0	54.86
	6417251.4	12389.92	904880243.	-145.5	0	
300	435.34	380.16	24487.8	0.0	200000	0.00
	14.3	283.45	17433389.	-150.0	76923	

Design values of cross section

Mat NoR	A[cm2] It[cm4]	Ay/Az/Ayz [cm2]	Iy/Iz/Iyz [cm4]	ys/zs [mm]	modules [N/mm2]	gam [kN/m]
1	2611.87	362.18	24843142.	0.0	182609	86.75
	6270.0	801.28	17001811.	1101.7	70234	

Design forces and moments
(C/E = characteristic plastic/elastic, D=plast.Design, F=elast. Design)

	N[kN]	Vy[kN]	Vz[kN]	Mt[kNm]	My[kNm]	Mz[kNm]	y[mm]	z[mm]	BUCK
C	86679.4	62894.73	63634.58	105983.9	92047.48	103450.7	26.0	-98.1	c c
C	-84000.2				164020.5	0.00	0.0	1131.	COMB
C	-42929.6				0.00	103488.1	0.0	0.0	COMB
C	-160968.	62894.73	63634.58	105983.8	-99527.5	-102930.	-26.0	1185.	
C	-1859.1				-99577.1	0.00	0.0	1131.	COMB
C	-42929.6				0.00	-103488.	0.0	0.0	COMB
E	90147.9	8579.23	16535.80	4350.31	66796.13	25752.34	0.0	1131.	
E	-90147.9	8579.23	16535.80	4350.31	-66796.1	-25752.3	0.0	1131.	
D	75373.4	47344.26	47792.48	70862.57	78827.84	77737.00	20.0	-36.7	
D	-59685.8				125571.6	0.00	0.0	1131.	COMB
D	-28619.8				0.00	77756.15	0.0	0.0	COMB
D	-124899.	47344.26	47792.47	70862.56	-82510.6	-77470.0	-20.0	1051.	
D	2446.3				-82609.4	0.00	0.0	1131.	COMB
D	-28619.8				0.00	-77756.1	0.0	0.0	COMB
F	78389.5	7460.20	14378.96	2900.20	58083.59	22393.34	0.0	1131.	
F	-78389.5	7460.20	14378.96	2900.20	-58083.6	-22393.3	0.0	1131.	

Additional Design Data

M	periphery-O/-I [m2/m]	[m2/m]	deff [mm]	t-min [mm]	t-max [mm]	SMP [o/o]	thet-p [tm2/m]	thet-y [tm2/m]	thet-z [tm2/m]	thet-yz [tm2/m]
	53.285		10.1	3.1	568.5	0.0	31.326	8.673	22.653	
1	7.885		49.1	45.0	52.0	0.0	1.229	1.198	0.031	
25	1.137		1174.0			0.0	0.045	0.045		
**	0.004		32.0			0.0	0.000		0.000	
31	16.530		265.5	50.0	300.0	0.0	22.626	0.004	22.622	
**	27.729		3.1	3.1	3.1	0.0	0.000	0.000	0.000	

SOFiSTiK AG - www.sofistik.de

Composite bridge 38+50+38, b=14.25m, 2x2HL1100R HISTAR460 , slab 0.30m C30/37

Cross section No. 172.1 = CS 1 - steel alone

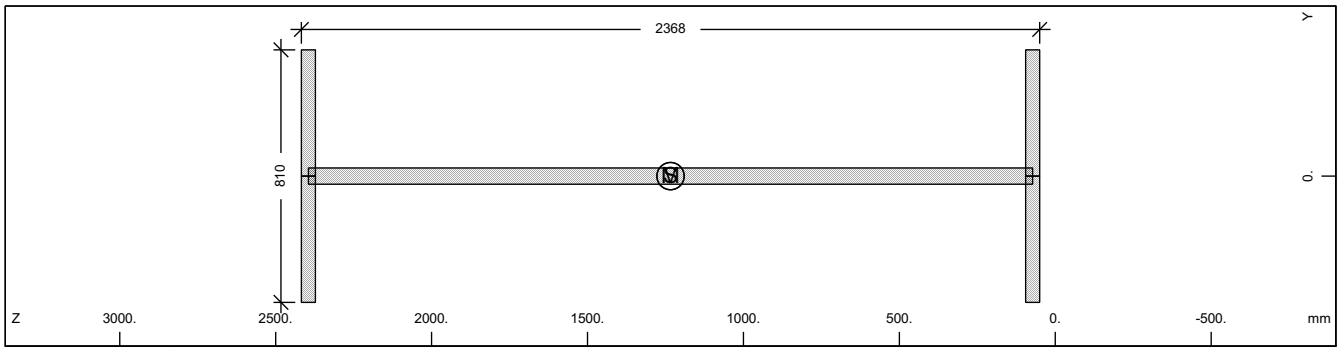

Cross section No. 172

Static properties of cross section

Mat NoR	A[cm2] It[cm4]	Ay/Az/Ayz [cm2]	Iy/Iz/Iyz [cm4]	ys/zs [mm]	modules [N/mm2]	gam [kN/m]
1	1936.73	607.50	15259948.	0.0	210000	15.20
	6270.0	1146.73	398580.9	1233.8	80769	

Additional static properties of cross section

Alfa-T [1/°K]	ymin ymax [mm]	zmin zmax [mm]	hymin hzmin [mm]	AK AB [cm2]	MB	Tau-T Tau-B [1/m3]	Tau-Vy Tau-Vz [1/m2]
1.2E-05	-405.0	-1183.8		1.169E+03		3.290E+02	2.058E+01
	405.0	1183.8				1.255E+02	9.753E+00

Section values for warping

Wmin[cm2]	Wmax[cm2]	CM[cm6]	CMS[cm4]	ASwyy[cm6]	ASwzz[cm6]	ry[mm]	rz[mm]
-4703.16	4703.165375094268.		8192490.8	-0.26	-9.83	0.0	0.0

Design values of cross section

Mat NoR	A[cm2] It[cm4]	Ay/Az/Ayz [cm2]	Iy/Iz/Iyz [cm4]	ys/zs [mm]	modules [N/mm2]	gam [kN/m]
1	1936.73	607.50	15259948.	0.0	182609	15.20
	6270.0	1146.73	398580.9	1233.8	70234	

Design forces and moments
(C/E = characteristic plastic/elastic, D=plast.Design, F=elast. Design)

	N[kN]	Vy[kN]	Vz[kN]	Mt[kNm]	My[kNm]	Mz[kNm]	y[mm]	z[mm]	BUCK
C	64880.3	14099.76	23358.90	924.58	51851.95	5471.32	0.0	1234.	c c
C	0.0				0.00	0.00	0.0	0.0	COMB
E	64880.3	9399.84	19831.26	587.91	43184.61	3296.90	0.0	1234.	
D	56417.7	12260.66	20312.09	803.98	45088.65	4757.67	0.0	1234.	
D	0.0				0.00	0.00	0.0	0.0	COMB
F	56417.6	8173.78	17244.58	511.23	37551.83	2866.87	0.0	1234.	

Additional Design Data

M	periphery-O/-I [m2/m] [m2/m]	deff [mm]	t-min [mm]	t-max [mm]	SMP [o/o]	thet-p [tm2/m]	thet-y [tm2/m]	thet-z [tm2/m]	thet-yz [tm2/m]
	7.885	49.1	45.0	52.0	0.0	1.229	1.198	0.031	

SOFiSTiK AG - www.sofistik.de

Composite bridge 38+50+38, b=14.25m, 2x2HL1100R HISTAR460 , slab 0.30m C30/37

Cross section No. 172.2 = CS 10 - prefab. slab C1

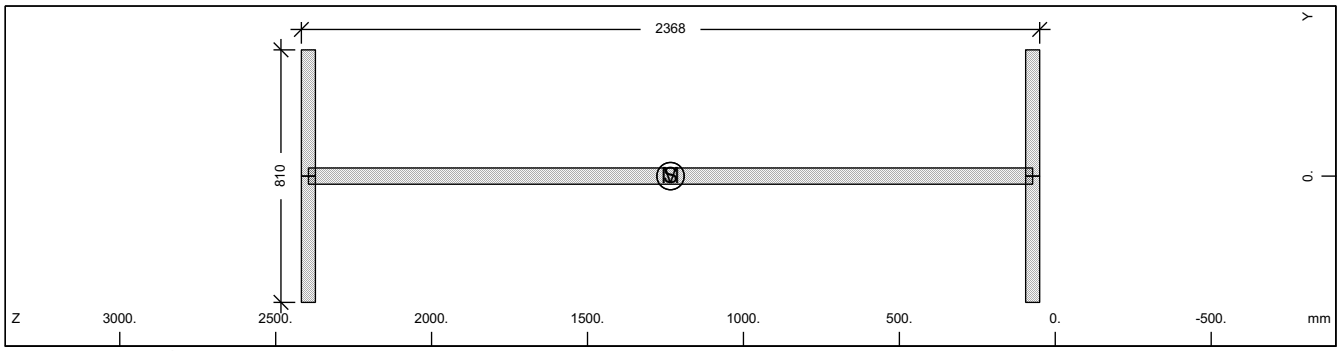

Cross section No. 172

Static properties of cross section

Mat NoR	A[cm2] It[cm4]	Ay/Az/Ayz [cm2]	Iy/Iz/Iyz [cm4]	ys/zs [mm]	modules [N/mm2]	gam [kN/m]
1	1936.73	607.50	15259948.	0.0	210000	15.20
	6270.0	1146.73	398580.9	1233.8	80769	

Additional static properties of cross section

Alfa-T [1/°K]	ymin ymax [mm]	zmin zmax [mm]	hymin hzmin [mm]	AK AB [cm2]	MB	Tau-T Tau-B [1/m3]	Tau-Vy Tau-Vz [1/m2]
1.2E-05	-405.0	-1183.8		1.169E+03		3.290E+02	2.058E+01
	405.0	1183.8				1.255E+02	9.753E+00

Section values for warping

Wmin[cm2]	Wmax[cm2]	CM[cm6]	CMS[cm4]	ASwyy[cm6]	ASwzz[cm6]	ry[mm]	rz[mm]
-4703.16	4703.165375094268.		8192490.8	-0.26	-9.83	0.0	0.0

Design values of cross section

Mat NoR	A[cm2] It[cm4]	Ay/Az/Ayz [cm2]	Iy/Iz/Iyz [cm4]	ys/zs [mm]	modules [N/mm2]	gam [kN/m]
1	1936.73	607.50	15259948.	0.0	182609	15.20
	6270.0	1146.73	398580.9	1233.8	70234	

Design forces and moments
(C/E = characteristic plastic/elastic, D=plast.Design, F=elast. Design)

	N[kN]	Vy[kN]	Vz[kN]	Mt[kNm]	My[kNm]	Mz[kNm]	y[mm]	z[mm]	BUCK
C	64880.3	14099.76	23358.90	924.58	51851.95	5471.32	0.0	1234.	c c
C	0.0				0.00	0.00	0.0	0.0	COMB
E	64880.3	9399.84	19831.26	587.91	43184.61	3296.90	0.0	1234.	
D	56417.7	12260.66	20312.09	803.98	45088.65	4757.67	0.0	1234.	
D	0.0				0.00	0.00	0.0	0.0	COMB
F	56417.6	8173.78	17244.58	511.23	37551.83	2866.87	0.0	1234.	

Additional Design Data

M	periphery-O/-I [m2/m] [m2/m]	deff [mm]	t-min [mm]	t-max [mm]	SMP [o/o]	thet-p [tm2/m]	thet-y [tm2/m]	thet-z [tm2/m]	thet-yz [tm2/m]
	7.885	49.1	45.0	52.0	0.0	1.229	1.198	0.031	

SOFiSTiK AG - www.sofistik.de

Composite bridge 38+50+38, b=14.25m, 2x2HL1100R HISTAR460 , slab 0.30m C30/37

Cross section No. 172.3 = CS 20 - in-situ conc:C2

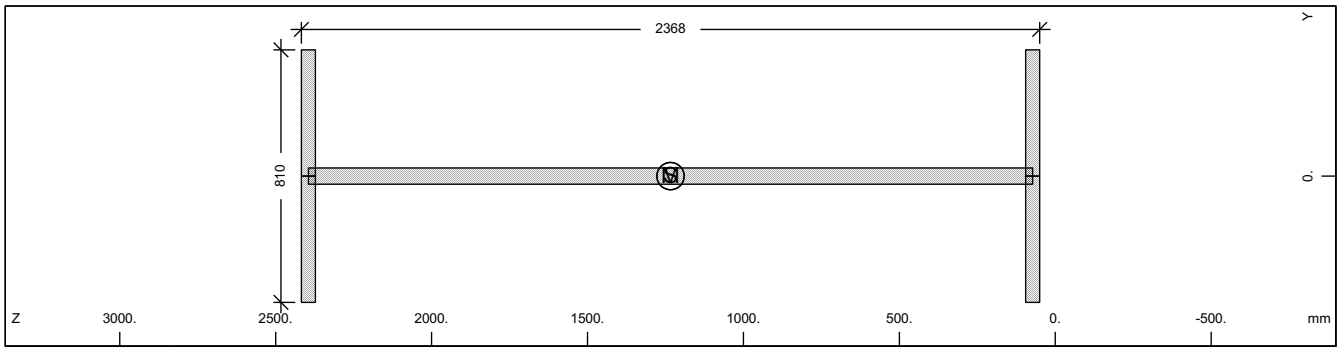

Cross section No. 172

Static properties of cross section

Mat / NoR	A[cm2] / It[cm4]	Ay/Az/Ayz [cm2]	Iy/Iz/Iyz [cm4]	ys/zs [mm]	modules [N/mm2]	gam [kN/m]
1	1936.73	607.50	15259948.	0.0	210000	15.20
	6270.0	1146.73	398580.9	1233.8	80769	

Additional static properties of cross section

Alfa-T [1/°K]	ymin / ymax [mm]	zmin / zmax [mm]	hymin / hzmin [mm]	AK / AB [cm2]	MB	Tau-T / Tau-B [1/m3]	Tau-Vy / Tau-Vz [1/m2]
1.2E-05	-405.0	-1183.8		1.169E+03		3.290E+02	2.058E+01
	405.0	1183.8				1.255E+02	9.753E+00

Section values for warping

Wmin[cm2]	Wmax[cm2]	CM[cm6]	CMS[cm4]	ASwyy[cm6]	ASwzz[cm6]	ry[mm]	rz[mm]
-4703.16	4703.165375094268.		8192490.8	-0.26	-9.83	0.0	0.0

Design values of cross section

Mat / NoR	A[cm2] / It[cm4]	Ay/Az/Ayz [cm2]	Iy/Iz/Iyz [cm4]	ys/zs [mm]	modules [N/mm2]	gam [kN/m]
1	1936.73	607.50	15259948.	0.0	182609	15.20
	6270.0	1146.73	398580.9	1233.8	70234	

Design forces and moments
(C/E = characteristic plastic/elastic, D=plast.Design, F=elast. Design)

	N[kN]	Vy[kN]	Vz[kN]	Mt[kNm]	My[kNm]	Mz[kNm]	y[mm]	z[mm]	BUCK
C	64880.3	14099.76	23358.90	924.58	51851.95	5471.32	0.0	1234.	c c
C	0.0				0.00	0.00	0.0	0.0	COMB
E	64880.3	9399.84	19831.26	587.91	43184.61	3296.90	0.0	1234.	
D	56417.7	12260.66	20312.09	803.98	45088.65	4757.67	0.0	1234.	
D	0.0				0.00	0.00	0.0	0.0	COMB
F	56417.6	8173.78	17244.58	511.23	37551.83	2866.87	0.0	1234.	

Additional Design Data

M	periphery-O/-I [m2/m]	[m2/m]	deff [mm]	t-min [mm]	t-max [mm]	SMP [o/o]	thet-p [tm2/m]	thet-y [tm2/m]	thet-z [tm2/m]	thet-yz [tm2/m]
	7.885		49.1	45.0	52.0	0.0	1.229	1.198	0.031	

SOFiSTiK AG - www.sofistik.de

Composite bridge 38+50+38, b=14.25m, 2x2HL1100R HISTAR460 , slab 0.30m C30/37

Cross section No. 172.4 = CS 21 - reinf active:C2

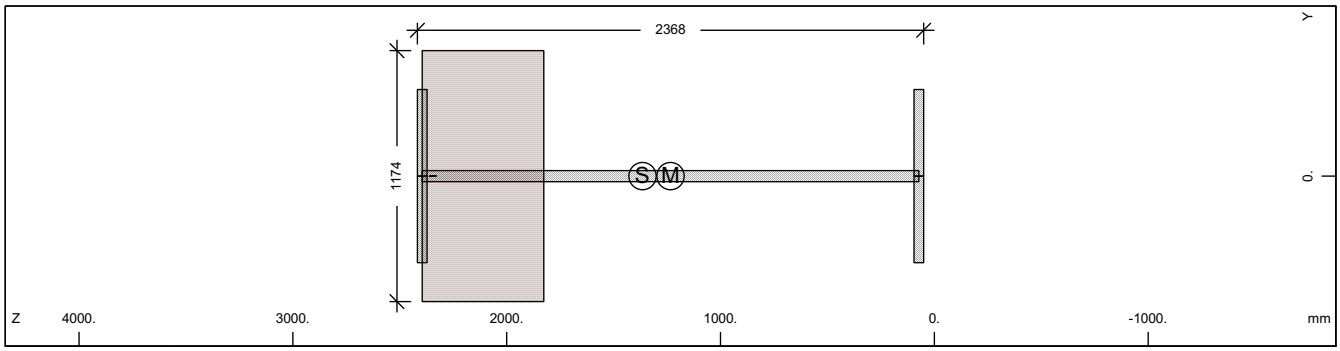

Cross section No. 172

Static properties of cross section

Mat NoR	A[cm2] It[cm4]	Ay/Az/Ayz [cm2]	Iy/Iz/Iyz [cm4]	ys/zs [mm]	modules [N/mm2]	gam [kN/m]
1	2276.37	607.50	17576309.	0.0	210000	31.89
	6270.0	1075.65	398580.9	1364.7	80769	

Additional static properties of cross section

Alfa-T [1/°K]	ymin ymax [mm]	zmin zmax [mm]	hymin hzmin [mm]	AK AB [cm2]	MB	Tau-T Tau-B [1/m3]	Tau-Vy Tau-Vz [1/m2]
1.2E-05	-587.0	-1314.7		4.492E+03		3.793E+00	2.058E+01
	587.0	1052.9		6.675E+03		1.255E+02	9.903E+00

Section values for warping

Wmin[cm2]	Wmax[cm2]	CM[cm6]	CMS[cm4]	ASwyy[cm6]	ASwzz[cm6]	ry[mm]	rz[mm]
-4703.16	4703.16	5375093802.	8192490.8	-0.84	-36.98	0.0	7.5

Partial cross sections

Mat NoR	A[cm2] It[cm4]	Ay/Az/Ayz [cm2]	Iy/Iz/Iyz [cm4]	ys/zs [mm]	modules [N/mm2]	gam [kN/m]
1	1936.73	607.50	15259948.	0.0	210000	15.20
	15806.4	1069.86	398580.9	1233.8	80769	
25	6674.76		1798000.6	0.0	10667	16.69
	30665547.	105.27	0.0	2110.8	4444	
210	0.64	0.00	0.0	0.0	200000	0.00
	2.2	0.00	0.0	2345.0	76923	

Design values of cross section

Mat NoR	A[cm2] It[cm4]	Ay/Az/Ayz [cm2]	Iy/Iz/Iyz [cm4]	ys/zs [mm]	modules [N/mm2]	gam [kN/m]
1	2197.27	607.50	17098796.	0.0	182609	31.89
	6270.0	1074.30	398580.9	1337.8	70234	

Design forces and moments
(C/E = characteristic plastic/elastic, D=plast.Design, F=elast. Design)

	N[kN]	Vy[kN]	Vz[kN]	Mt[kNm]	My[kNm]	Mz[kNm]	y[mm]	z[mm]	BUCK
C	64912.5	14118.33	34834.13	7397.10	51887.66	8502.08	6.1	1235.	c c
C	-4529.0				52182.03	0.00	0.0	1365.	COMB
C	-10012.1				0.00	8410.14	0.0	0.0	COMB
C	-84936.7	14118.33	34834.13	7397.10	-56228.4	-8379.49	-6.1	1716.	
C	-15495.3				-67121.8	0.00	0.0	1365.	COMB
C	-10012.1				0.00	-8410.14	0.0	0.0	COMB
E	76258.5	9399.84	19529.86	4350.27	44786.67	3296.90	0.0	1365.	
E	-76258.5	9399.84	19529.86	4350.27	-44786.7	-3296.90	0.0	1365.	
D	56445.6	12276.81	28055.96	5120.56	45119.71	6764.04	4.7	1235.	
D	-3938.2				45375.68	0.00	0.0	1365.	COMB
D	-6674.8				0.00	6716.94	0.0	0.0	COMB
D	-69795.1	12276.81	28055.96	5120.56	-47603.1	-6701.23	-4.7	1634.	
D	-9411.3				-55335.5	0.00	0.0	1365.	COMB
D	-6674.8				0.00	-6716.94	0.0	0.0	COMB

SOFiSTiK AG - www.sofistik.de

Composite bridge 38+50+38, b=14.25m, 2x2HL1100R HISTAR460 , slab 0.30m C30/37

Design forces and moments
(C/E = characteristic plastic/elastic, D=plast.Design, F=elast. Design)

	N[kN]	Vy[kN]	Vz[kN]	Mt[kNm]	My[kNm]	Mz[kNm]	y[mm]	z[mm]	BUCK
F	66311.7	8173.78	16982.49	2900.18	38944.93	2866.87	0.0	1365.	
F	-66311.7	8173.78	16982.49	2900.18	-38944.9	-2866.87	0.0	1365.	

Additional Design Data

M	periphery-O/-I [m2/m]	[m2/m]	deff [mm]	t-min [mm]	t-max [mm]	SMP [o/o]	thet-p [tm2/m]	thet-y [tm2/m]	thet-z [tm2/m]	thet-yz [tm2/m]
	9.026		50.4	32.0	568.5	0.0	1.886	1.855	0.031	
1	7.885		49.1	45.0	52.0	0.0	1.229	1.198	0.031	
25	1.137		1174.0			0.0	0.045	0.045		
**	0.004		32.0			0.0	0.000		0.000	

Cross section No. 172.5 = CS 30 - in-situ conc:C3

Cross section No. 173 - VFT (153)

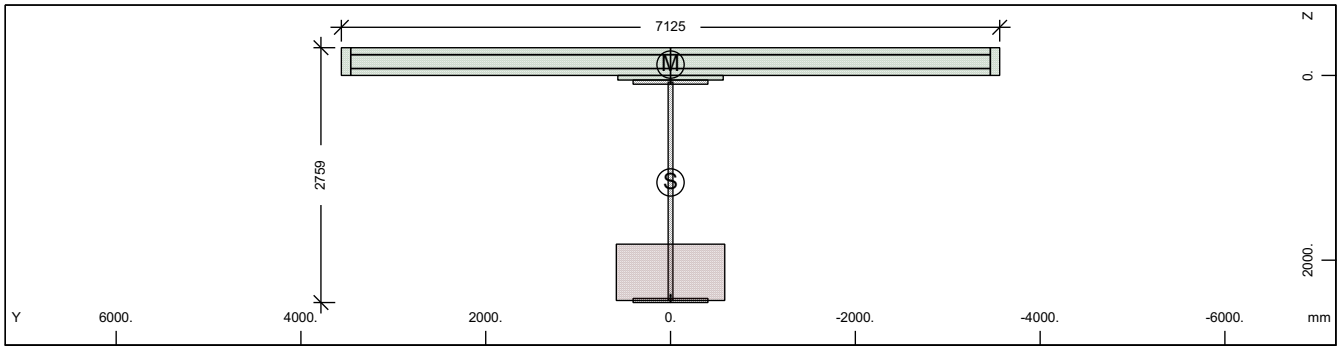

Cross section No. 173 - VFT (153)

Static properties of cross section

Mat NoR	A[cm2] It[cm4]	Ay/Az/Ayz [cm2]	Iy/Iz/Iyz [cm4]	ys/zs [mm]	y/z-sc [mm]	modules [N/mm2]	gam [kN/m]
1	2736.77	361.79	26770234.	0.0	0.0	210000	88.14
	6270.0	820.35	16940804.	1158.8	-117.0	80769	

Additional static properties of cross section

Alfa-T [1/°K]	ymin ymax [mm]	zmin zmax [mm]	hymin hzmin [mm]	AK AB [cm2]	MB	Tau-T Tau-B [1/m3]	Tau-Vy Tau-Vz [1/m2]
1.2E-05	-3562.5	-1458.8		4.817E+03		3.537E+00	3.369E+01
	3562.5	1300.2		2.911E+04		1.255E+02	1.704E+01

Section values for warping

Wmin[cm2]	Wmax[cm2]	CM[cm6]	CMS[cm4]	ASwyy[cm6]	ASwzz[cm6]	ry[mm]	rz[mm]
-10341.59	10341.59	1.418E+10	3250245.4	310.57	490.76	0.0	1703.0

Partial cross sections

Mat NoR	A[cm2] It[cm4]	Ay/Az/Ayz [cm2]	Iy/Iz/Iyz [cm4]	ys/zs [mm]	modules [N/mm2]	gam [kN/m]
1	1958.29	0.12	15910281.	0.0	210000	15.37
	16000.8	547.53	398580.9	1254.5	80769	
25	7161.69		2220900.6	0.0	10667	17.90
	32902619.	57.37	0.0	2131.5	4444	
210	0.64	0.00	0.0	0.0	200000	0.00
	2.2	0.00	0.0	2386.5	76923	
31	21945.00	17840.31	170028.4	0.0	0	54.86
	6417251.4	12400.63	904880243.	-145.5	0	
300	434.81	379.76	24457.8	0.0	200000	0.00
	14.3	282.61	17369330.	-150.0	76923	

SOFiSTiK AG - www.sofistik.de

Composite bridge 38+50+38, b=14.25m, 2x2HL1100R HISTAR460 , slab 0.30m C30/37

Design values of cross section

Mat NoR	A[cm2] It[cm4]	Ay/Az/Ayz [cm2]	Iy/Iz/Iyz [cm4]	ys/zs [mm]	modules [N/mm2]	gam [kN/m]
1	2651.89	361.79	25915137.	0.0	182609	88.14
	6270.0	819.10	16940804.	1127.7	70234	

Design forces and moments
(C/E = characteristic plastic/elastic, D=plast.Design, F=elast. Design)

	N[kN]	Vy[kN]	Vz[kN]	Mt[kNm]	My[kNm]	Mz[kNm]	y[mm]	z[mm]	BUCK
C	87375.2	62879.31	64855.16	106466.3	94345.38	103595.8	25.2	-74.1	c c
C	-84209.2				167724.8	0.00	0.0	1159.	COMB
C	-43660.0				0.00	103619.4	0.0	0.0	COMB
C	-162614.	62879.31	64855.15	106466.3	-102617.	-103053.	-25.2	1248.	
C	-3110.9				-102756.	0.00	0.0	1159.	COMB
C	-43660.0				0.00	-103619.	0.0	0.0	COMB
E	91681.9	8569.45	16938.18	4665.21	68973.92	25691.44	0.0	1159.	
E	-91681.9	8569.45	16938.18	4665.21	-68973.9	-25691.4	0.0	1159.	
D	75978.5	47330.86	48690.83	71186.39	80806.11	77822.28	20.0	-32.1	
D	-59867.5				128425.4	0.00	0.0	1159.	COMB
D	-29106.7				0.00	77826.83	0.0	0.0	COMB
D	-126138.	47330.86	48690.83	71186.38	-85067.9	-77535.9	-20.0	1104.	
D	1654.1				-85113.1	0.00	0.0	1159.	COMB
D	-29106.7				0.00	-77826.8	0.0	0.0	COMB
F	79723.4	7451.70	14728.85	3110.14	59977.32	22340.38	0.0	1159.	
F	-79723.4	7451.70	14728.85	3110.14	-59977.3	-22340.4	0.0	1159.	

Additional Design Data

M	periphery-O/-I [m2/m]	[m2/m]	deff [mm]	t-min [mm]	t-max [mm]	SMP [o/o]	thet-p [tm2/m]	thet-y [tm2/m]	thet-z [tm2/m]	thet-yz [tm2/m]
	53.417		10.2	3.1	610.0	0.0	31.856	9.202	22.653	
1	7.968		49.2	45.0	52.0	0.0	1.280	1.249	0.031	
25	1.220		1174.0			0.0	0.056	0.056		
**	0.004		32.0			0.0	0.000		0.000	
31	16.530		265.5	50.0	300.0	0.0	22.626	0.004	22.622	
**	27.695		3.1	3.1	3.1	0.0	0.000	0.000	0.000	

Cross section No. 173.1 = CS 1 - steel alone

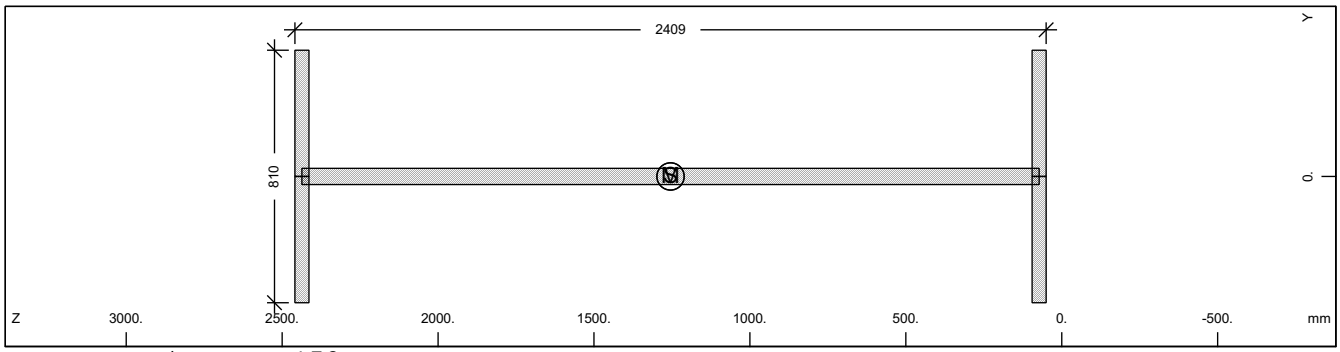

Cross section No. 173

Static properties of cross section

Mat NoR	A[cm2] It[cm4]	Ay/Az/Ayz [cm2]	Iy/Iz/Iyz [cm4]	ys/zs [mm]	modules [N/mm2]	gam [kN/m]
1	1958.29	607.50	15910281.	0.0	210000	15.37
	6270.0	1167.49	398580.9	1254.5	80769	

Additional static properties of cross section

Alfa-T [1/°K]	ymin / ymax [mm]	zmin / zmax [mm]	hymin / hzmin [mm]	AK / AB [cm2]	MB	Tau-T / Tau-B [1/m3]	Tau-Vy / Tau-Vz [1/m2]
1.2E-05	-405.0	-1204.5		1.183E+03		3.250E+02	2.058E+01
	405.0	1204.5				1.255E+02	9.598E+00

SOFiSTiK AG - www.sofistik.de

Composite bridge 38+50+38, b=14.25m, 2x2HL1100R HISTAR460 , slab 0.30m C30/37

Section values for warping

Wmin[cm2]	Wmax[cm2]	CM[cm6]	CMS[cm4]	ASwyy[cm6]	ASwzz[cm6]	ry[mm]	rz[mm]
-4787.15	4787.155	568785150.	8487705.9	-1.79	-71.65	0.0	0.0

Design values of cross section

Mat NoR	A[cm2] It[cm4]	Ay/Az/Ayz [cm2]	Iy/Iz/Iyz [cm4]	ys/zs [mm]	modules [N/mm2]	gam [kN/m]
1	1958.29	607.50	15910281.	0.0	182609	15.37
	6270.0	1167.49	398580.9	1254.5	70234	

Design forces and moments
(C/E = characteristic plastic/elastic, D=plast.Design, F=elast. Design)

	N[kN]	Vy[kN]	Vz[kN]	Mt[kNm]	My[kNm]	Mz[kNm]	y[mm]	z[mm]	BUCK
C	65602.8	14099.76	23776.04	935.42	53204.93	5480.71	0.0	1255.	c c
C	0.0				0.00	0.00	0.0	0.0	COMB
E	65602.8	9399.84	20150.62	595.14	44249.82	3296.90	0.0	1255.	
D	57045.9	12260.66	20674.82	813.41	46265.15	4765.84	0.0	1255.	
D	0.0				0.00	0.00	0.0	0.0	COMB
F	57045.9	8173.78	17522.28	517.52	38478.10	2866.87	0.0	1255.	

Additional Design Data

M	periphery-O/-I [m2/m]	[m2/m]	deff [mm]	t-min [mm]	t-max [mm]	SMP [o/o]	thet-p [tm2/m]	thet-y [tm2/m]	thet-z [tm2/m]	thet-yz [tm2/m]
	7.968		49.2	45.0	52.0	0.0	1.280	1.249	0.031	

Cross section No. 173.2 = CS 10 - prefab. slab C1

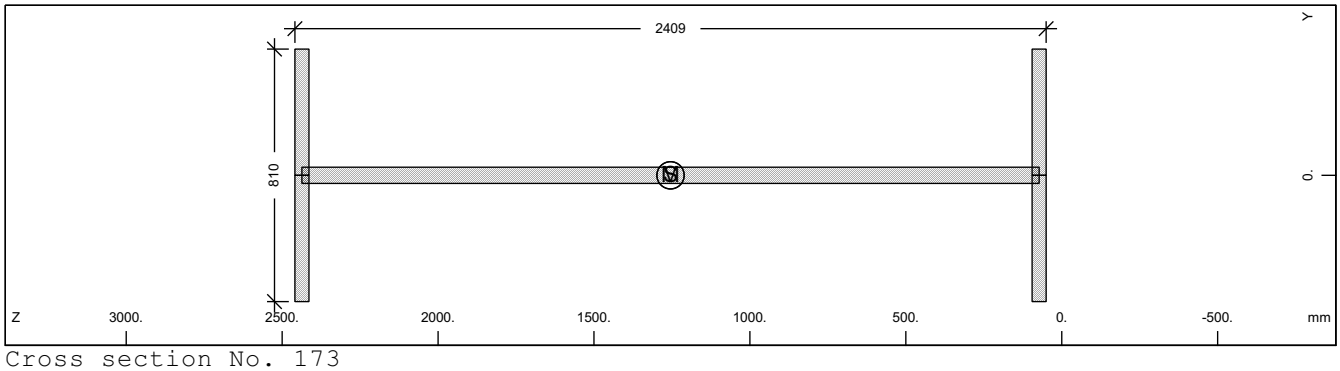

Cross section No. 173

Static properties of cross section

Mat NoR	A[cm2] It[cm4]	Ay/Az/Ayz [cm2]	Iy/Iz/Iyz [cm4]	ys/zs [mm]	modules [N/mm2]	gam [kN/m]
1	1958.29	607.50	15910281.	0.0	210000	15.37
	6270.0	1167.49	398580.9	1254.5	80769	

Additional static properties of cross section

Alfa-T [1/°K]	ymin ymax [mm]	zmin zmax [mm]	hymin hzmin [mm]	AK AB [cm2]	MB	Tau-T Tau-B [1/m3]	Tau-Vy Tau-Vz [1/m2]
1.2E-05	-405.0	-1204.5		1.183E+03		3.250E+02	2.058E+01
	405.0	1204.5				1.255E+02	9.598E+00

Section values for warping

Wmin[cm2]	Wmax[cm2]	CM[cm6]	CMS[cm4]	ASwyy[cm6]	ASwzz[cm6]	ry[mm]	rz[mm]
-4787.15	4787.155	568785150.	8487705.9	-1.79	-71.65	0.0	0.0

Design values of cross section

Mat NoR	A[cm2] It[cm4]	Ay/Az/Ayz [cm2]	Iy/Iz/Iyz [cm4]	ys/zs [mm]	modules [N/mm2]	gam [kN/m]
1	1958.29	607.50	15910281.	0.0	182609	15.37
	6270.0	1167.49	398580.9	1254.5	70234	

SOFiSTiK AG - www.sofistik.de

Composite bridge 38+50+38, b=14.25m, 2x2HL1100R HISTAR460 , slab 0.30m C30/37

Design forces and moments
(C/E = characteristic plastic/elastic, D=plast.Design, F=elast. Design)

	N[kN]	Vy[kN]	Vz[kN]	Mt[kNm]	My[kNm]	Mz[kNm]	y[mm]	z[mm]	BUCK
C	65602.8	14099.76	23776.04	935.42	53204.93	5480.71	0.0	1255.	c c
C	0.0				0.00	0.00	0.0	0.0	COMB
E	65602.8	9399.84	20150.62	595.14	44249.82	3296.90	0.0	1255.	
D	57045.9	12260.66	20674.82	813.41	46265.15	4765.84	0.0	1255.	
D	0.0				0.00	0.00	0.0	0.0	COMB
F	57045.9	8173.78	17522.28	517.52	38478.10	2866.87	0.0	1255.	

Additional Design Data

M	periphery-O/-I [m2/m]	[m2/m]	deff [mm]	t-min [mm]	t-max [mm]	SMP [o/o]	thet-p [tm2/m]	thet-y [tm2/m]	thet-z [tm2/m]	thet-yz [tm2/m]
	7.968		49.2	45.0	52.0	0.0	1.280	1.249	0.031	

Cross section No. 173.3 = CS 20 - in-situ conc:C2

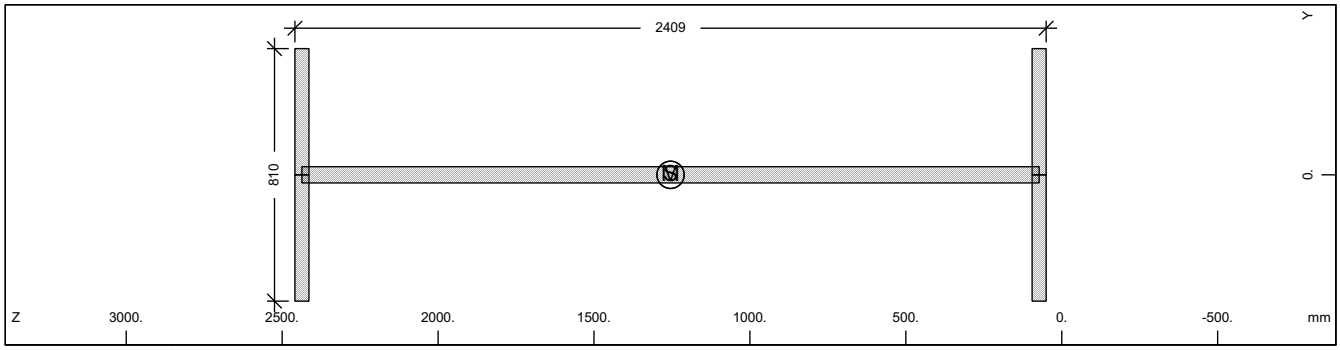

Cross section No. 173

Static properties of cross section

Mat NoR	A[cm2] It[cm4]	Ay/Az/Ayz [cm2]	Iy/Iz/Iyz [cm4]	ys/zs [mm]	modules [N/mm2]	gam [kN/m]
1	1958.29	607.50	15910281.	0.0	210000	15.37
	6270.0	1167.49	398580.9	1254.5	80769	

Additional static properties of cross section

Alfa-T [1/°K]	ymin ymax [mm]	zmin zmax [mm]	hymin hzmin [mm]	AK AB [cm2]	MB	Tau-T Tau-B [1/m3]	Tau-Vy Tau-Vz [1/m2]
1.2E-05	-405.0	-1204.5		1.183E+03		3.250E+02	2.058E+01
	405.0	1204.5				1.255E+02	9.598E+00

Section values for warping

Wmin[cm2]	Wmax[cm2]	CM[cm6]	CMS[cm4]	ASwyy[cm6]	ASwzz[cm6]	ry[mm]	rz[mm]
-4787.15	4787.155	568785150.	8487705.9	-1.79	-71.65	0.0	0.0

Design values of cross section

Mat NoR	A[cm2] It[cm4]	Ay/Az/Ayz [cm2]	Iy/Iz/Iyz [cm4]	ys/zs [mm]	modules [N/mm2]	gam [kN/m]
1	1958.29	607.50	15910281.	0.0	182609	15.37
	6270.0	1167.49	398580.9	1254.5	70234	

Design forces and moments
(C/E = characteristic plastic/elastic, D=plast.Design, F=elast. Design)

	N[kN]	Vy[kN]	Vz[kN]	Mt[kNm]	My[kNm]	Mz[kNm]	y[mm]	z[mm]	BUCK
C	65602.8	14099.76	23776.04	935.42	53204.93	5480.71	0.0	1255.	c c
C	0.0				0.00	0.00	0.0	0.0	COMB
E	65602.8	9399.84	20150.62	595.14	44249.82	3296.90	0.0	1255.	
D	57045.9	12260.66	20674.82	813.41	46265.15	4765.84	0.0	1255.	
D	0.0				0.00	0.00	0.0	0.0	COMB
F	57045.9	8173.78	17522.28	517.52	38478.10	2866.87	0.0	1255.	

SOFiSTiK AG - www.sofistik.de

Composite bridge 38+50+38, b=14.25m, 2x2HL1100R HISTAR460 , slab 0.30m C30/37

Additional Design Data

M	periphery-O/-I [m2/m]	[m2/m]	deff [mm]	t-min [mm]	t-max [mm]	SMP [o/o]	thet-p [tm2/m]	thet-y [tm2/m]	thet-z [tm2/m]	thet-yz [tm2/m]
	7.968		49.2	45.0	52.0	0.0	1.280	1.249	0.031	

Cross section No. 173.4 = CS 21 - reinf active:C2

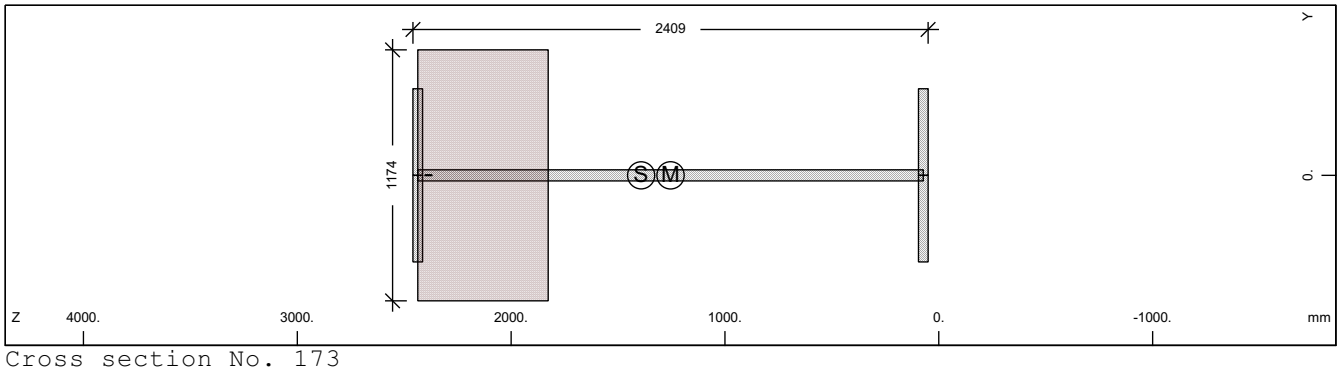

Cross section No. 173

Static properties of cross section

Mat NoR	A[cm2] It[cm4]	Ay/Az/Ayz [cm2]	Iy/Iz/Iyz [cm4]	ys/zs [mm]	modules [N/mm2]	gam [kN/m]
1	2322.67	607.50	18388690.	0.0	210000	33.28
	6270.0	1088.81	398580.9	1392.2	80769	

Additional static properties of cross section

Alfa-T [1/°K]	ymin ymax [mm]	zmin zmax [mm]	hymin hzmin [mm]	AK AB [cm2]	MB	Tau-T Tau-B [1/m3]	Tau-Vy Tau-Vz [1/m2]
1.2E-05	-587.0	-1342.2		4.817E+03		3.537E+00	2.058E+01
	587.0	1066.9		7.162E+03		1.255E+02	9.766E+00

Section values for warping

Wmin[cm2]	Wmax[cm2]	CM[cm6]	CMS[cm4]	ASwyy[cm6]	ASwzz[cm6]	ry[mm]	rz[mm]
-4787.15	4787.15	5568785150.	8487705.9	0.22	10.25	0.0	6.1

Partial cross sections

Mat NoR	A[cm2] It[cm4]	Ay/Az/Ayz [cm2]	Iy/Iz/Iyz [cm4]	ys/zs [mm]	modules [N/mm2]	gam [kN/m]
1	1958.29	607.50	15910281.	0.0	210000	15.37
	16000.8	1082.34	398580.9	1254.5	80769	
25	7161.69		2220900.6	0.0	10667	17.90
	32902619.	117.61	0.0	2131.5	4444	
210	0.64	0.00	0.0	0.0	200000	0.00
	2.2	0.00	0.0	2386.5	76923	

Design values of cross section

Mat NoR	A[cm2] It[cm4]	Ay/Az/Ayz [cm2]	Iy/Iz/Iyz [cm4]	ys/zs [mm]	modules [N/mm2]	gam [kN/m]
1	2237.79	607.50	17880789.	0.0	182609	33.28
	6270.0	1087.30	398580.9	1364.1	70234	

Design forces and moments
(C/E = characteristic plastic/elastic, D=plast.Design, F=elast. Design)

	N[kN]	Vy[kN]	Vz[kN]	Mt[kNm]	My[kNm]	Mz[kNm]	y[mm]	z[mm]	BUCK
C	65635.0	14118.33	36054.71	7879.56	53241.31	8737.90	6.5	1256.	c c
C	-4763.6				53566.97	0.00	0.0	1392.	COMB
C	-10742.5				0.00	8633.90	0.0	0.0	COMB
C	-87120.0	14118.33	36054.71	7879.56	-58085.2	-8599.24	-6.5	1759.	
C	-16721.5				-69451.9	0.00	0.0	1392.	COMB
C	-10742.5				0.00	-8633.90	0.0	0.0	COMB
E	77809.6	9399.84	19805.23	4665.18	45897.62	3296.90	0.0	1392.	
E	-77809.6	9399.84	19805.23	4665.18	-45897.6	-3296.90	0.0	1392.	
D	57073.9	12276.81	28954.31	5444.40	46296.79	6921.31	5.0	1256.	

SOFiSTiK AG - www.sofistik.de

Composite bridge 38+50+38, b=14.25m, 2x2HL1100R HISTAR460 , slab 0.30m C30/37

Design forces and moments
(C/E = characteristic plastic/elastic, D=plast.Design, F=elast. Design)

	N[kN]	Vy[kN]	Vz[kN]	Mt[kNm]	My[kNm]	Mz[kNm]	y[mm]	z[mm]	BUCK
D	-4142.3				46579.97	0.00	0.0	1392.	COMB
D	-7161.7				0.00	6868.02	0.0	0.0	COMB
D	-71397.3	12276.81	28954.31	5444.40	-49073.6	-6850.25	-5.0	1675.	
D	-10181.1				-57169.9	0.00	0.0	1392.	COMB
D	-7161.7				0.00	-6868.02	0.0	0.0	COMB
F	67660.5	8173.78	17221.94	3110.12	39910.98	2866.87	0.0	1392.	
F	-67660.5	8173.78	17221.94	3110.12	-39911.0	-2866.87	0.0	1392.	

Additional Design Data

M	periphery-O/-I [m2/m]	[m2/m]	deff [mm]	t-min [mm]	t-max [mm]	SMP [o/o]	thet-p [tm2/m]	thet-y [tm2/m]	thet-z [tm2/m]	thet-yz [tm2/m]
	9.192		50.5	32.0	610.0	0.0	1.972	1.941	0.031	
1	7.968		49.2	45.0	52.0	0.0	1.280	1.249	0.031	
25	1.220		1174.0			0.0	0.056	0.056		
**	0.004		32.0			0.0	0.000		0.000	

Cross section No. 173.5 = CS 30 - in-situ conc:C3

Cross section No. 174 - VFT (153)

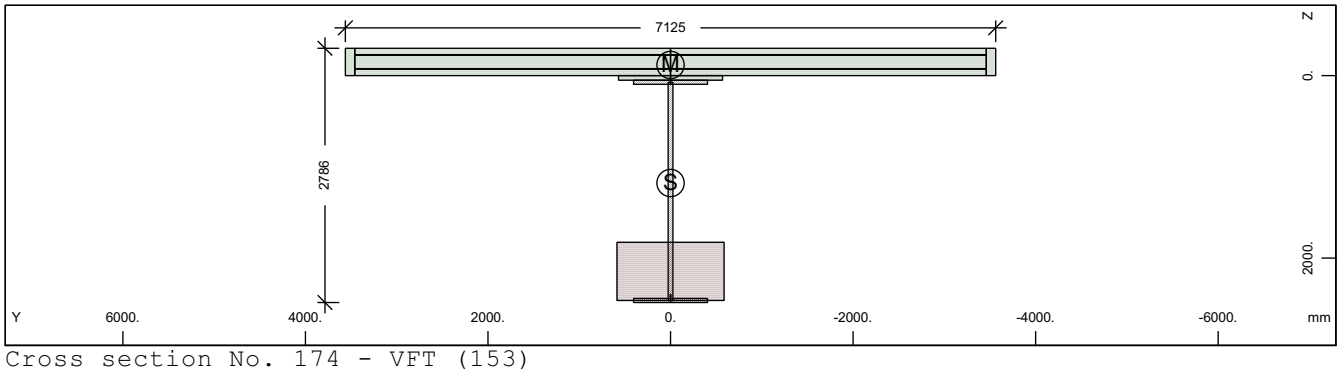

Cross section No. 174 - VFT (153)

Static properties of cross section

Mat NoR	A[cm2] It[cm4]	Ay/Az/Ayz [cm2]	Iy/Iz/Iyz [cm4]	ys/zs [mm]	y/z-sc [mm]	modules [N/mm2]	gam [kN/m]
1	2766.97	361.54	27522528.	0.0	0.0	210000	89.05
	6270.0	832.08	16900660.	1176.8	-116.6	80769	

Additional static properties of cross section

Alfa-T [1/°K]	ymin ymax [mm]	zmin zmax [mm]	hymin hzmin [mm]	AK AB [cm2]	MB	Tau-T Tau-B [1/m3]	Tau-Vy Tau-Vz [1/m2]
1.2E-05	-3562.5	-1476.8		5.031E+03		3.386E+00	3.371E+01
	3562.5	1309.5		2.943E+04		1.255E+02	1.678E+01

Section values for warping

Wmin[cm2]	Wmax[cm2]	CM[cm6]	CMS[cm4]	ASwyy[cm6]	ASwzz[cm6]	ry[mm]	rz[mm]
-10450.73	10450.73	1.445E+10	3368960.0	-429.80	-699.92	0.0	1740.7

Partial cross sections

Mat NoR	A[cm2] It[cm4]	Ay/Az/Ayz [cm2]	Iy/Iz/Iyz [cm4]	ys/zs [mm]	modules [N/mm2]	gam [kN/m]
1	1972.51	0.12	16348307.	0.0	210000	15.48
	16129.0	559.57	398580.9	1268.2	80769	
25	7482.76		2533195.7	0.0	10667	18.71
	34377718.	62.62	0.0	2145.2	4444	
210	0.64	0.00	0.0	0.0	200000	0.00
	2.2	0.00	0.0	2413.9	76923	
31	21945.00	17900.20	170028.4	0.0	0	54.86
	6417251.4	12404.71	904880243.	-145.5	0	

SOFiSTiK AG - www.sofistik.de

Composite bridge 38+50+38, b=14.25m, 2x2HL1100R HISTAR460 , slab 0.30m C30/37

300	434.45	379.49	24438.0	0.0	200000	0.00
	14.3	281.99	17327179.	-150.0	76923	

Design values of cross section

Mat	A[cm2]	Ay/Az/Ayz	Iy/Iz/Iyz	ys/zs	modules	gam
NoR	It[cm4]	[cm2]	[cm4]	[mm]	[N/mm2]	[kN/m]
1	2678.28	361.54	26633367.	0.0	182609	89.05
	6270.0	830.77	16900659.	1144.8	70234	

Design forces and moments
(C/E = characteristic plastic/elastic, D=plast.Design, F=elast. Design)

	N[kN]	Vy[kN]	Vz[kN]	Mt[kNm]	My[kNm]	Mz[kNm]	y[mm]	z[mm]	BUCK
C	87834.0	62869.15	65659.98	106784.4	95881.45	103716.0	26.0	-74.0	c c
C	-84342.8				170165.7	0.00	0.0	1177.	COMB
C	-44141.7				0.00	103706.0	0.0	0.0	COMB
C	-163700.	62869.15	65659.98	106784.4	-104628.	-103133.	-26.0	1290.	
C	-3940.5				-104851.	0.00	0.0	1177.	COMB
C	-44141.7				0.00	-103706.	0.0	0.0	COMB
E	92693.5	8563.00	17204.29	4872.86	70406.84	25651.33	0.0	1177.	
E	-92693.5	8563.00	17204.29	4872.86	-70406.8	-25651.3	0.0	1177.	
D	76377.4	47322.03	49283.20	71399.91	82123.19	77878.57	20.0	-29.1	
D	-59983.8				130307.3	0.00	0.0	1177.	COMB
D	-29427.8				0.00	77873.49	0.0	0.0	COMB
D	-126955.	47322.03	49283.19	71399.90	-86742.9	-77579.4	-20.0	1140.	
D	1128.2				-86763.9	0.00	0.0	1177.	COMB
D	-29427.8				0.00	-77873.5	0.0	0.0	COMB
F	80603.0	7446.09	14960.26	3248.57	61223.34	22305.50	0.0	1177.	
F	-80603.0	7446.09	14960.26	3248.57	-61223.3	-22305.5	0.0	1177.	

Additional Design Data

M	periphery-O/-I		deff	t-min	t-max	SMP	thet-p	thet-y	thet-z	thet-yz
	[m2/m]	[m2/m]	[mm]	[mm]	[mm]	[o/o]	[tm2/m]	[tm2/m]	[tm2/m]	[tm2/m]
	53.504		10.3	3.1	637.4	0.0	32.208	9.554	22.653	
1	8.023		49.2	45.0	52.0	0.0	1.315	1.283	0.031	
25	1.275		1174.0			0.0	0.063	0.063		
**	0.004		32.0			0.0	0.000		0.000	
31	16.530		265.5	50.0	300.0	0.0	22.626	0.004	22.622	
**	27.672		3.1	3.1	3.1	0.0	0.000	0.000	0.000	

Cross section No. 174.1 = CS 1 - steel alone

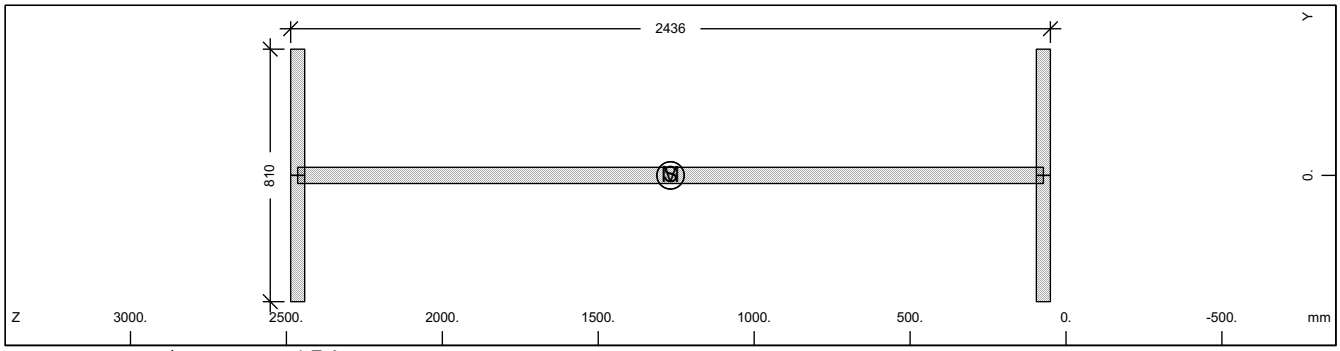

Cross section No. 174

Static properties of cross section

Mat	A[cm2]	Ay/Az/Ayz	Iy/Iz/Iyz	ys/zs	modules	gam
NoR	It[cm4]	[cm2]	[cm4]	[mm]	[N/mm2]	[kN/m]
1	1972.51	607.50	16348307.	0.0	210000	15.48
	6270.0	1181.16	398580.9	1268.2	80769	

SOFiSTiK AG - www.sofistik.de

Composite bridge 38+50+38, b=14.25m, 2x2HL1100R HISTAR460 , slab 0.30m C30/37

Additional static properties of cross section

Alfa-T	ymin ymax	zmin zmax	hymin hzmin	AK AB	MB	Tau-T Tau-B	Tau-Vy Tau-Vz
[1/°K]	[mm]	[mm]	[mm]	[cm2]		[1/m3]	[1/m2]
1.2E-05	-405.0	-1218.2		1.193E+03		3.224E+02	2.058E+01
	405.0	1218.2				1.255E+02	9.499E+00

Section values for warping

Wmin[cm2]	Wmax[cm2]	CM[cm6]	CMS[cm4]	ASwyy[cm6]	ASwzz[cm6]	ry[mm]	rz[mm]
-4842.53	4842.535698377289.	8685225.3		-0.25	-10.20	0.0	0.0

Design values of cross section

Mat NoR	A[cm2] It[cm4]	Ay/Az/Ayz [cm2]	Iy/Iz/Iyz [cm4]	ys/zs [mm]	modules [N/mm2]	gam [kN/m]
1	1972.51	607.50	16348307.	0.0	182609	15.48
	6270.0	1181.16	398580.9	1268.2	70234	

Design forces and moments
(C/E = characteristic plastic/elastic, D=plast.Design, F=elast. Design)

	N[kN]	Vy[kN]	Vz[kN]	Mt[kNm]	My[kNm]	Mz[kNm]	y[mm]	z[mm]	BUCK
C	66079.2	14099.76	24051.10	942.57	54105.26	5486.91	0.0	1268.	c c
C	0.0				0.00	0.00	0.0	0.0	COMB
E	66079.2	9399.84	20360.83	599.91	44957.65	3296.90	0.0	1268.	
D	57460.2	12260.66	20914.00	819.63	47048.05	4771.22	0.0	1268.	
D	0.0				0.00	0.00	0.0	0.0	COMB
F	57460.2	8173.78	17705.07	521.66	39093.61	2866.87	0.0	1268.	

Additional Design Data

M	periphery-O/-I [m2/m]	[m2/m]	deff [mm]	t-min [mm]	t-max [mm]	SMP [o/o]	thet-p [tm2/m]	thet-y [tm2/m]	thet-z [tm2/m]	thet-yz [tm2/m]
	8.023		49.2	45.0	52.0	0.0	1.315	1.283	0.031	

Cross section No. 174.2 = CS 10 - prefab. slab C1

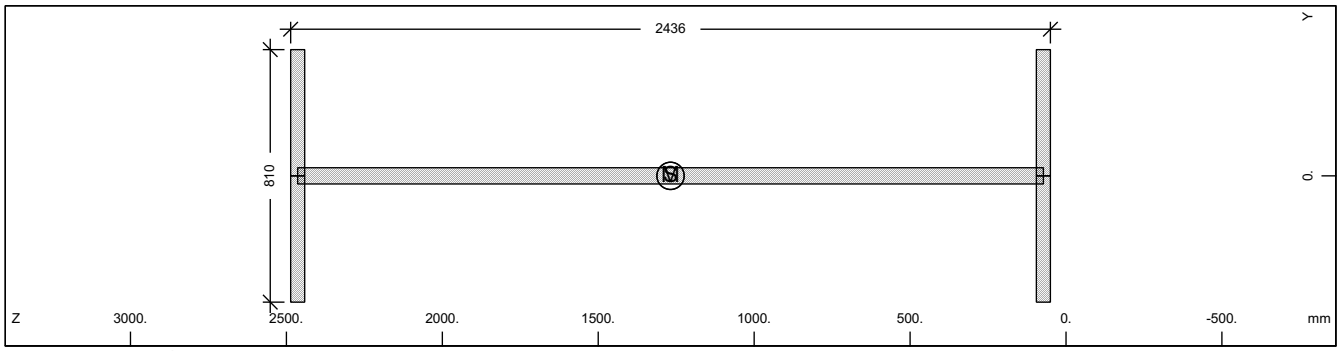

Cross section No. 174

Static properties of cross section

Mat NoR	A[cm2] It[cm4]	Ay/Az/Ayz [cm2]	Iy/Iz/Iyz [cm4]	ys/zs [mm]	modules [N/mm2]	gam [kN/m]
1	1972.51	607.50	16348307.	0.0	210000	15.48
	6270.0	1181.16	398580.9	1268.2	80769	

Additional static properties of cross section

Alfa-T	ymin ymax	zmin zmax	hymin hzmin	AK AB	MB	Tau-T Tau-B	Tau-Vy Tau-Vz
[1/°K]	[mm]	[mm]	[mm]	[cm2]		[1/m3]	[1/m2]
1.2E-05	-405.0	-1218.2		1.193E+03		3.224E+02	2.058E+01
	405.0	1218.2				1.255E+02	9.499E+00

Section values for warping

Wmin[cm2]	Wmax[cm2]	CM[cm6]	CMS[cm4]	ASwyy[cm6]	ASwzz[cm6]	ry[mm]	rz[mm]
-4842.53	4842.535698377289.	8685225.3		-0.25	-10.20	0.0	0.0

SOFiSTiK AG - www.sofistik.de

Composite bridge 38+50+38, b=14.25m, 2x2HL1100R HISTAR460 , slab 0.30m C30/37

Design values of cross section

Mat NoR	A[cm2] It[cm4]	Ay/Az/Ayz [cm2]	Iy/Iz/Iyz [cm4]	ys/zs [mm]	modules [N/mm2]	gam [kN/m]
1	1972.51	607.50	16348307.	0.0	182609	15.48
	6270.0	1181.16	398580.9	1268.2	70234	

Design forces and moments
(C/E = characteristic plastic/elastic, D=plast.Design, F=elast. Design)

	N[kN]	Vy[kN]	Vz[kN]	Mt[kNm]	My[kNm]	Mz[kNm]	y[mm]	z[mm]	BUCK
C	66079.2	14099.76	24051.10	942.57	54105.26	5486.91	0.0	1268.	c c
C	0.0				0.00	0.00	0.0	0.0	COMB
E	66079.2	9399.84	20360.83	599.91	44957.65	3296.90	0.0	1268.	
D	57460.2	12260.66	20914.00	819.63	47048.05	4771.22	0.0	1268.	
D	0.0				0.00	0.00	0.0	0.0	COMB
F	57460.2	8173.78	17705.07	521.66	39093.61	2866.87	0.0	1268.	

Additional Design Data

M	periphery-O/-I [m2/m] [m2/m]	deff [mm]	t-min [mm]	t-max [mm]	SMP [o/o]	thet-p [tm2/m]	thet-y [tm2/m]	thet-z [tm2/m]	thet-yz [tm2/m]
	8.023	49.2	45.0	52.0	0.0	1.315	1.283	0.031	

Cross section No. 174.3 = CS 20 - in-situ conc:C2

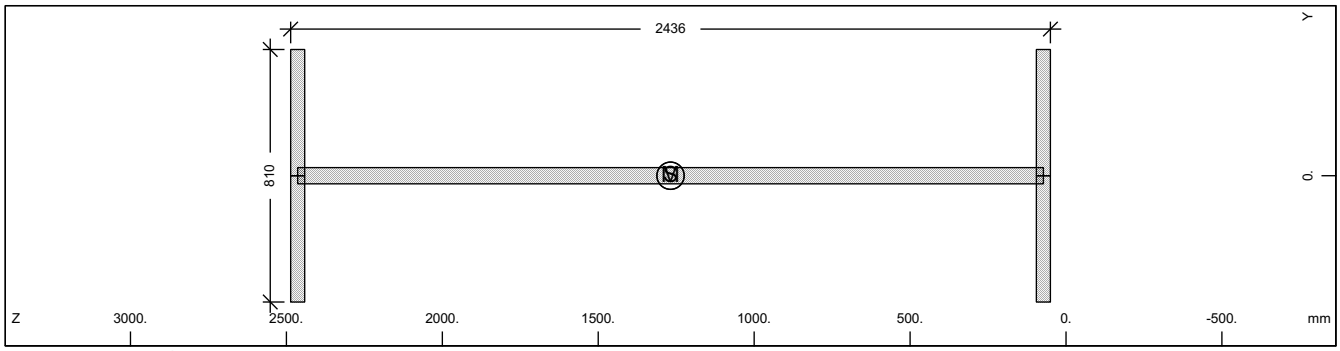

Cross section No. 174

Static properties of cross section

Mat NoR	A[cm2] It[cm4]	Ay/Az/Ayz [cm2]	Iy/Iz/Iyz [cm4]	ys/zs [mm]	modules [N/mm2]	gam [kN/m]
1	1972.51	607.50	16348307.	0.0	210000	15.48
	6270.0	1181.16	398580.9	1268.2	80769	

Additional static properties of cross section

Alfa-T [1/°K]	ymin ymax [mm]	zmin zmax [mm]	hymin hzmin [mm]	AK AB [cm2]	MB	Tau-T Tau-B [1/m3]	Tau-Vy Tau-Vz [1/m2]
1.2E-05	-405.0	-1218.2		1.193E+03		3.224E+02	2.058E+01
	405.0	1218.2				1.255E+02	9.499E+00

Section values for warping

Wmin[cm2]	Wmax[cm2]	CM[cm6]	CMS[cm4]	ASwyy[cm6]	ASwzz[cm6]	ry[mm]	rz[mm]
-4842.53	4842.535698377289.	8685225.3		-0.25	-10.20	0.0	0.0

Design values of cross section

Mat NoR	A[cm2] It[cm4]	Ay/Az/Ayz [cm2]	Iy/Iz/Iyz [cm4]	ys/zs [mm]	modules [N/mm2]	gam [kN/m]
1	1972.51	607.50	16348307.	0.0	182609	15.48
	6270.0	1181.16	398580.9	1268.2	70234	

Design forces and moments
(C/E = characteristic plastic/elastic, D=plast.Design, F=elast. Design)

	N[kN]	Vy[kN]	Vz[kN]	Mt[kNm]	My[kNm]	Mz[kNm]	y[mm]	z[mm]	BUCK
C	66079.2	14099.76	24051.10	942.57	54105.26	5486.91	0.0	1268.	c c
C	0.0				0.00	0.00	0.0	0.0	COMB
E	66079.2	9399.84	20360.83	599.91	44957.65	3296.90	0.0	1268.	

SOFiSTiK AG - www.sofistik.de

Composite bridge 38+50+38, b=14.25m, 2x2HL1100R HISTAR460 , slab 0.30m C30/37

Design forces and moments
(C/E = characteristic plastic/elastic, D=plast.Design, F=elast. Design)

	N[kN]	Vy[kN]	Vz[kN]	Mt[kNm]	My[kNm]	Mz[kNm]	y[mm]	z[mm]	BUCK
D	57460.2	12260.66	20914.00	819.63	47048.05	4771.22	0.0	1268.	
D	0.0				0.00	0.00	0.0	0.0	COMB
F	57460.2	8173.78	17705.07	521.66	39093.61	2866.87	0.0	1268.	

Additional Design Data

M	periphery-O/-I [m2/m]	[m2/m]	deff [mm]	t-min [mm]	t-max [mm]	SMP [o/o]	thet-p [tm2/m]	thet-y [tm2/m]	thet-z [tm2/m]	thet-yz [tm2/m]
	8.023		49.2	45.0	52.0	0.0	1.315	1.283	0.031	

Cross section No. 174.4 = CS 21 - reinf active:C2

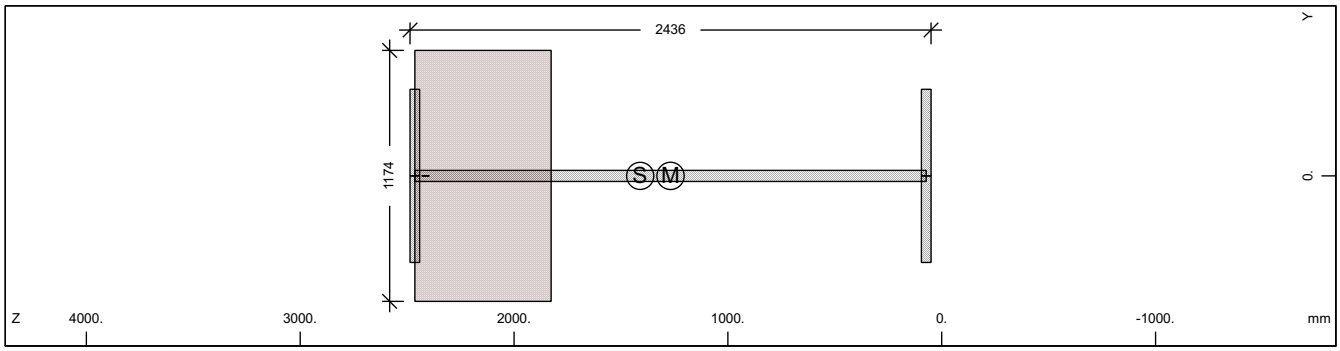

Cross section No. 174

Static properties of cross section

Mat NoR	A[cm2] It[cm4]	Ay/Az/Ayz [cm2]	Iy/Iz/Iyz [cm4]	ys/zs [mm]	modules [N/mm2]	gam [kN/m]
1	2353.20	607.50	18934155.	0.0	210000	34.19
	6270.0	1097.52	398580.9	1410.1	80769	

Additional static properties of cross section

Alfa-T [1/°K]	ymin ymax [mm]	zmin zmax [mm]	hymin hzmin [mm]	AK AB [cm2]	MB	Tau-T Tau-B [1/m3]	Tau-Vy Tau-Vz [1/m2]
1.2E-05	-587.0	-1360.1		5.031E+03		3.386E+00	2.058E+01
	587.0	1076.2		7.483E+03		1.255E+02	9.677E+00

Section values for warping

Wmin[cm2]	Wmax[cm2]	CM[cm6]	CMS[cm4]	ASwyy[cm6]	ASwzz[cm6]	ry[mm]	rz[mm]
-4842.53	4842.535698377289.		8685225.3	-2.89	-137.33	0.0	5.3

Partial cross sections

Mat NoR	A[cm2] It[cm4]	Ay/Az/Ayz [cm2]	Iy/Iz/Iyz [cm4]	ys/zs [mm]	modules [N/mm2]	gam [kN/m]
1	1972.51	607.50	16348307.	0.0	210000	15.48
	16129.0	1090.60	398580.9	1268.2	80769	
25	7482.76		2533195.7	0.0	10667	18.71
	34377718.	125.71	0.0	2145.2	4444	
210	0.64	0.00	0.0	0.0	200000	0.00
	2.2	0.00	0.0	2413.9	76923	

Design values of cross section

Mat NoR	A[cm2] It[cm4]	Ay/Az/Ayz [cm2]	Iy/Iz/Iyz [cm4]	ys/zs [mm]	modules [N/mm2]	gam [kN/m]
1	2264.52	607.50	18406201.	0.0	182609	34.19
	6270.0	1095.90	398580.9	1381.3	70234	

Design forces and moments
(C/E = characteristic plastic/elastic, D=plast.Design, F=elast. Design)

	N[kN]	Vy[kN]	Vz[kN]	Mt[kNm]	My[kNm]	Mz[kNm]	y[mm]	z[mm]	BUCK
C	66111.4	14118.33	36859.54	8197.69	54142.09	8893.69	6.7	1269.	c c
C	-4913.3				54488.53	0.00	0.0	1410.	COMB

SOFiSTiK AG - www.sofistik.de

Composite bridge 38+50+38, b=14.25m, 2x2HL1100R HISTAR460 , slab 0.30m C30/37

Design forces and moments
(C/E = characteristic plastic/elastic, D=plast.Design, F=elast. Design)

	N[kN]	Vy[kN]	Vz[kN]	Mt[kNm]	My[kNm]	Mz[kNm]	y[mm]	z[mm]	BUCK
C	-11224.1				0.00	8781.45	0.0	0.0	COMB
C	-88559.7	14118.33	36859.54	8197.69	-59326.8	-8744.04	-6.7	1788.	
C	-17535.0				-70989.2	0.00	0.0	1410.	COMB
C	-11224.1				0.00	-8781.45	0.0	0.0	COMB
E	78832.3	9399.84	19986.78	4872.82	46634.71	3296.90	0.0	1410.	
E	-78832.3	9399.84	19986.78	4872.82	-46634.7	-3296.90	0.0	1410.	
D	57488.2	12276.81	29546.68	5657.93	47080.07	7025.16	5.1	1269.	
D	-4272.4				47381.33	0.00	0.0	1410.	COMB
D	-7482.8				0.00	6967.64	0.0	0.0	COMB
D	-72453.7	12276.81	29546.68	5657.93	-50055.4	-6948.46	-5.1	1702.	
D	-10693.1				-58381.8	0.00	0.0	1410.	COMB
D	-7482.8				0.00	-6967.64	0.0	0.0	COMB
F	68549.8	8173.78	17379.80	3248.55	40551.92	2866.87	0.0	1410.	
F	-68549.8	8173.78	17379.80	3248.55	-40551.9	-2866.87	0.0	1410.	

Additional Design Data

M	periphery-O/-I [m2/m]	[m2/m]	deff [mm]	t-min [mm]	t-max [mm]	SMP [o/o]	thet-p [tm2/m]	thet-y [tm2/m]	thet-z [tm2/m]	thet-yz [tm2/m]
	9.302		50.6	32.0	637.4	0.0	2.030	1.998	0.031	
1	8.023		49.2	45.0	52.0	0.0	1.315	1.283	0.031	
25	1.275		1174.0			0.0	0.063	0.063		
**	0.004		32.0			0.0	0.000		0.000	

Cross section No. 174.5 = CS 30 - in-situ conc:C3

Cross section No. 175 - VFT (153)

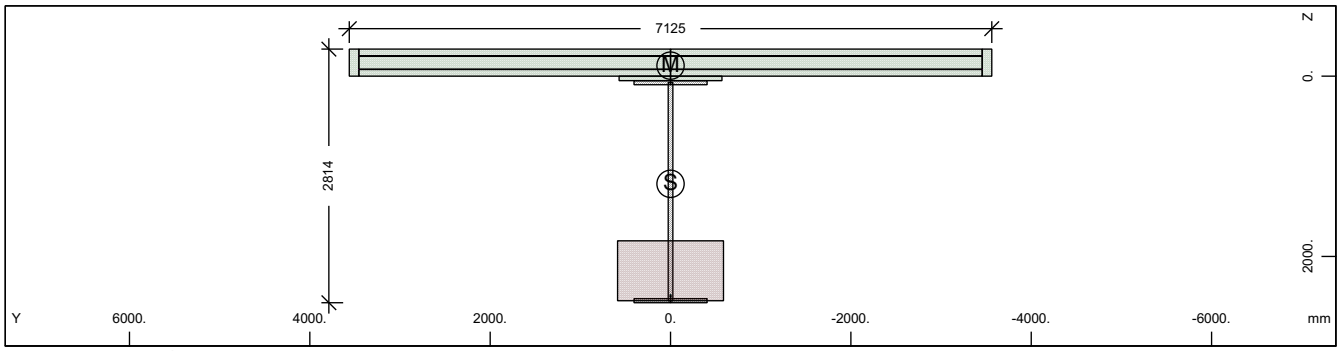

Cross section No. 175 - VFT (153)

Static properties of cross section

Mat NoR	A[cm2] It[cm4]	Ay/Az/Ayz [cm2]	Iy/Iz/Iyz [cm4]	ys/zs [mm]	y/z-sc [mm]	modules [N/mm2]	gam [kN/m]
1	2797.16	361.29	28283924.	0.0	0.0	210000	89.97
	6270.0	843.77	16860578.	1194.8	-116.2	80769	

Additional static properties of cross section

Alfa-T [1/°K]	ymin ymax [mm]	zmin zmax [mm]	hymin hzmin [mm]	AK AB [cm2]	MB	Tau-T Tau-B [1/m3]	Tau-Vy Tau-Vz [1/m2]
1.2E-05	-3562.5	-1494.8		5.245E+03		3.248E+00	3.374E+01
	3562.5	1319.0		2.975E+04		1.255E+02	1.652E+01

Section values for warping

Wmin[cm2]	Wmax[cm2]	CM[cm6]	CMS[cm4]	ASwyy[cm6]	ASwzz[cm6]	ry[mm]	rz[mm]
-10559.87	10559.87	1.473E+10	3490619.4	-281.05	-471.47	0.0	1778.1

SOFiSTiK AG - www.sofistik.de

Composite bridge 38+50+38, b=14.25m, 2x2HL1100R HISTAR460 , slab 0.30m C30/37

Partial cross sections

Mat NoR	A[cm2] It[cm4]	Ay/Az/Ayz [cm2]	Iy/Iz/Iyz [cm4]	ys/zs [mm]	modules [N/mm2]	gam [kN/m]
1	1986.74	0.12	16793721.	0.0	210000	15.60
	16257.1	571.59	398580.9	1281.9	80769	
25	7803.85		2873484.2	0.0	10667	19.51
	35852853.	68.01	0.0	2158.9	4444	
210	0.64	0.00	0.0	0.0	200000	0.00
	2.2	0.00	0.0	2441.2	76923	
31	21945.00	17960.35	170028.4	0.0	0	54.86
	6417251.4	12406.67	904880243.	-145.5	0	
300	434.10	379.23	24418.2	0.0	200000	0.00
	14.3	281.33	17285092.	-150.0	76923	

Design values of cross section

Mat NoR	A[cm2] It[cm4]	Ay/Az/Ayz [cm2]	Iy/Iz/Iyz [cm4]	ys/zs [mm]	modules [N/mm2]	gam [kN/m]
1	2704.67	361.29	27360782.	0.0	182609	89.97
	6270.0	842.39	16860578.	1161.8	70234	

Design forces and moments
(C/E = characteristic plastic/elastic, D=plast.Design, F=elast. Design)

	N[kN]	Vy[kN]	Vz[kN]	Mt[kNm]	My[kNm]	Mz[kNm]	y[mm]	z[mm]	BUCK
C	88292.9	62858.99	66464.84	107102.5	97430.56	103821.5	26.0	-73.9	c c
C	-84473.3				172605.6	0.00	0.0	1195.	COMB
C	-44623.3				0.00	103792.7	0.0	0.0	COMB
C	-164786.	62858.99	66464.84	107102.5	-106617.	-103214.	-26.0	1332.	
C	-4773.2				-106944.	0.00	0.0	1195.	COMB
C	-44623.3				0.00	-103793.	0.0	0.0	COMB
E	93705.0	8556.55	17471.16	5080.51	71837.66	25611.24	0.0	1195.	
E	-93705.0	8556.55	17471.16	5080.51	-71837.7	-25611.2	0.0	1195.	
D	76776.4	47313.19	49875.57	71613.45	83450.32	77934.89	20.0	-26.1	
D	-60097.2				132189.5	0.00	0.0	1195.	COMB
D	-29748.8				0.00	77920.18	0.0	0.0	COMB
D	-127772.	47313.19	49875.57	71613.43	-88408.8	-77623.0	-20.0	1175.	
D	599.5				-88414.8	0.00	0.0	1195.	COMB
D	-29748.8				0.00	-77920.2	0.0	0.0	COMB
F	81482.6	7440.48	15192.32	3387.00	62467.54	22270.64	0.0	1195.	
F	-81482.6	7440.48	15192.32	3387.00	-62467.5	-22270.6	0.0	1195.	

Additional Design Data

M	periphery-O/-I [m2/m]	[m2/m]	deff [mm]	t-min [mm]	t-max [mm]	SMP [o/o]	thet-p [tm2/m]	thet-y [tm2/m]	thet-z [tm2/m]	thet-yz [tm2/m]
	53.591		10.4	3.1	664.7	0.0	32.562	9.909	22.653	
1	8.077		49.2	45.0	52.0	0.0	1.350	1.318	0.031	
25	1.329		1174.0			0.0	0.072	0.072		
**	0.004		32.0			0.0	0.000		0.000	
31	16.530		265.5	50.0	300.0	0.0	22.626	0.004	22.622	
**	27.650		3.1	3.1	3.1	0.0	0.000	0.000	0.000	

SOFiSTiK AG - www.sofistik.de

Composite bridge 38+50+38, b=14.25m, 2x2HL1100R HISTAR460 , slab 0.30m C30/37

Cross section No. 175.1 = CS 1 - steel alone

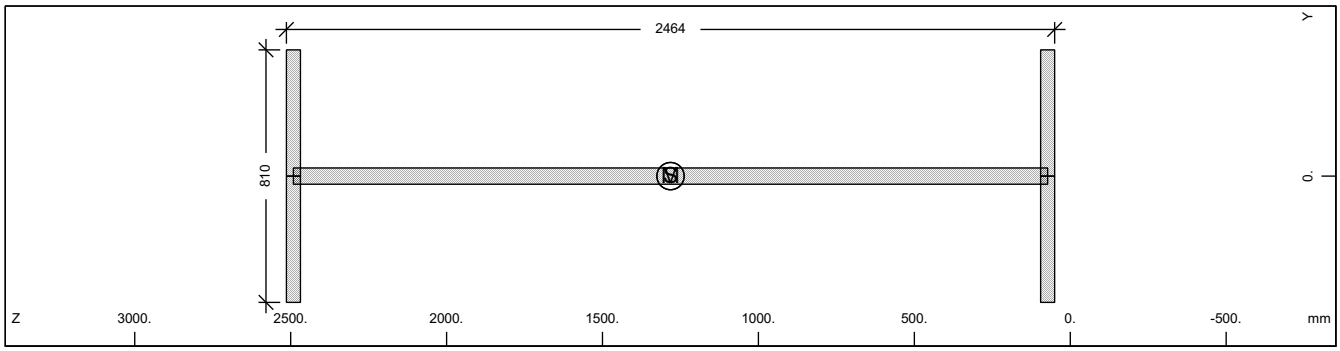

Cross section No. 175

Static properties of cross section

Mat / NoR	A[cm2] / It[cm4]	Ay/Az/Ayz [cm2]	Iy/Iz/Iyz [cm4]	ys/zs [mm]	modules [N/mm2]	gam [kN/m]
1	1986.74	607.50	16793721.	0.0	210000	15.60
	6270.0	1194.82	398580.9	1281.9	80769	

Additional static properties of cross section

Alfa-T [1/°K]	ymin / ymax [mm]	zmin / zmax [mm]	hymin / hzmin [mm]	AK / AB [cm2]	MB	Tau-T / Tau-B [1/m3]	Tau-Vy / Tau-Vz [1/m2]
1.2E-05	-405.0	-1231.9		1.202E+03		3.199E+02	2.058E+01
	405.0	1231.9				1.255E+02	9.402E+00

Section values for warping

Wmin[cm2]	Wmax[cm2]	CM[cm6]	CMS[cm4]	ASwyy[cm6]	ASwzz[cm6]	ry[mm]	rz[mm]
-4897.91	4897.915829464667.		8885023.1	-4.55	-191.53	0.0	0.0

Design values of cross section

Mat / NoR	A[cm2] / It[cm4]	Ay/Az/Ayz [cm2]	Iy/Iz/Iyz [cm4]	ys/zs [mm]	modules [N/mm2]	gam [kN/m]
1	1986.74	607.50	16793721.	0.0	182609	15.60
	6270.0	1194.82	398580.9	1281.9	70234	

Design forces and moments
(C/E = characteristic plastic/elastic, D=plast.Design, F=elast. Design)

	N[kN]	Vy[kN]	Vz[kN]	Mt[kNm]	My[kNm]	Mz[kNm]	y[mm]	z[mm]	BUCK
C	66555.7	14099.76	24326.17	949.72	55012.14	5493.10	0.0	1282.	c c
C	0.0				0.00	0.00	0.0	0.0	COMB
E	66555.7	9399.84	20570.78	604.68	45669.88	3296.90	0.0	1282.	
D	57874.5	12260.66	21153.19	825.85	47836.64	4776.61	0.0	1282.	
D	0.0				0.00	0.00	0.0	0.0	COMB
F	57874.5	8173.78	17887.63	525.81	39712.94	2866.87	0.0	1282.	

Additional Design Data

M	periphery-O/-I [m2/m]	[m2/m]	deff [mm]	t-min [mm]	t-max [mm]	SMP [o/o]	thet-p [tm2/m]	thet-y [tm2/m]	thet-z [tm2/m]	thet-yz [tm2/m]
	8.077		49.2	45.0	52.0	0.0	1.350	1.318	0.031	

SOFiSTiK AG - www.sofistik.de

Composite bridge 38+50+38, b=14.25m, 2x2HL1100R HISTAR460 , slab 0.30m C30/37

Cross section No. 175.2 = CS 10 - prefab. slab C1

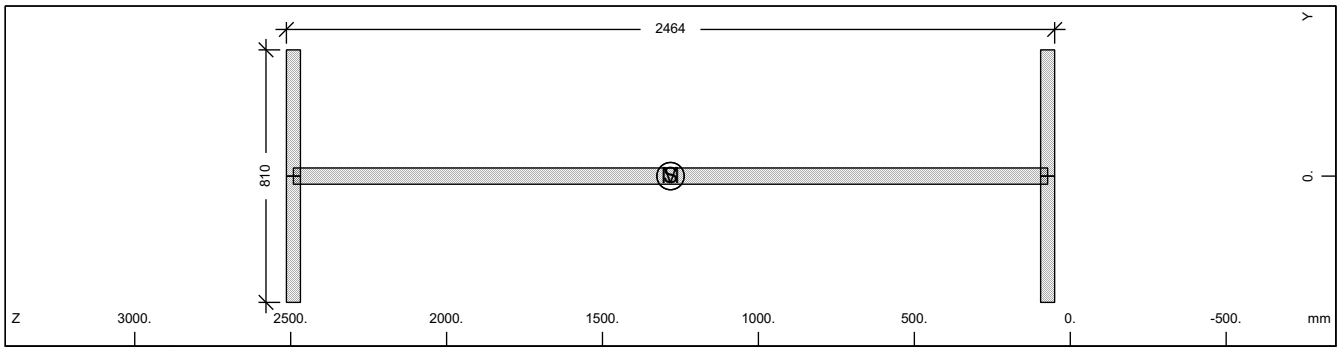

Cross section No. 175

Static properties of cross section

Mat / NoR	A[cm2] / It[cm4]	Ay/Az/Ayz [cm2]	Iy/Iz/Iyz [cm4]	ys/zs [mm]	modules [N/mm2]	gam [kN/m]
1	1986.74	607.50	16793721.	0.0	210000	15.60
	6270.0	1194.82	398580.9	1281.9	80769	

Additional static properties of cross section

Alfa-T [1/°K]	ymin / ymax [mm]	zmin / zmax [mm]	hymin / hzmin [mm]	AK / AB [cm2]	MB	Tau-T / Tau-B [1/m3]	Tau-Vy / Tau-Vz [1/m2]
1.2E-05	-405.0	-1231.9		1.202E+03		3.199E+02	2.058E+01
	405.0	1231.9				1.255E+02	9.402E+00

Section values for warping

Wmin[cm2]	Wmax[cm2]	CM[cm6]	CMS[cm4]	ASwyy[cm6]	ASwzz[cm6]	ry[mm]	rz[mm]
-4897.91	4897.91	5829464667.	8885023.1	-4.55	-191.53	0.0	0.0

Design values of cross section

Mat / NoR	A[cm2] / It[cm4]	Ay/Az/Ayz [cm2]	Iy/Iz/Iyz [cm4]	ys/zs [mm]	modules [N/mm2]	gam [kN/m]
1	1986.74	607.50	16793721.	0.0	182609	15.60
	6270.0	1194.82	398580.9	1281.9	70234	

Design forces and moments
(C/E = characteristic plastic/elastic, D=plast.Design, F=elast. Design)

	N[kN]	Vy[kN]	Vz[kN]	Mt[kNm]	My[kNm]	Mz[kNm]	y[mm]	z[mm]	BUCK
C	66555.7	14099.76	24326.17	949.72	55012.14	5493.10	0.0	1282.	c c
C	0.0				0.00	0.00	0.0	0.0	COMB
E	66555.7	9399.84	20570.78	604.68	45669.88	3296.90	0.0	1282.	
D	57874.5	12260.66	21153.19	825.85	47836.64	4776.61	0.0	1282.	
D	0.0				0.00	0.00	0.0	0.0	COMB
F	57874.5	8173.78	17887.63	525.81	39712.94	2866.87	0.0	1282.	

Additional Design Data

M	periphery-O/-I [m2/m]	[m2/m]	deff [mm]	t-min [mm]	t-max [mm]	SMP [o/o]	thet-p [tm2/m]	thet-y [tm2/m]	thet-z [tm2/m]	thet-yz [tm2/m]
	8.077		49.2	45.0	52.0	0.0	1.350	1.318	0.031	

SOFiSTiK AG - www.sofistik.de

Composite bridge 38+50+38, b=14.25m, 2x2HL1100R HISTAR460 , slab 0.30m C30/37

Cross section No. 175.3 = CS 20 - in-situ conc:C2

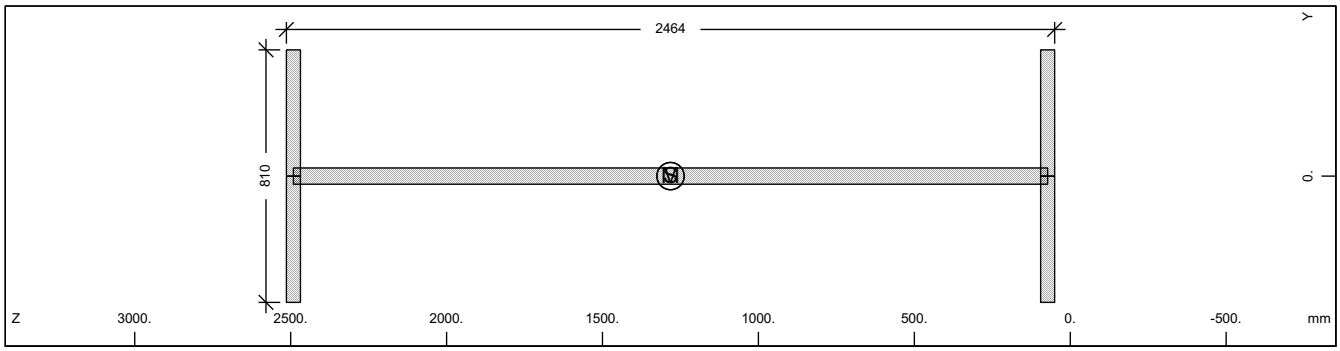

Cross section No. 175

Static properties of cross section

Mat / NoR	A[cm2] / It[cm4]	Ay/Az/Ayz [cm2]	Iy/Iz/Iyz [cm4]	ys/zs [mm]	modules [N/mm2]	gam [kN/m]
1	1986.74	607.50	16793721.	0.0	210000	15.60
	6270.0	1194.82	398580.9	1281.9	80769	

Additional static properties of cross section

Alfa-T [1/°K]	ymin / ymax [mm]	zmin / zmax [mm]	hymin / hzmin [mm]	AK / AB [cm2]	MB	Tau-T / Tau-B [1/m3]	Tau-Vy / Tau-Vz [1/m2]
1.2E-05	-405.0	-1231.9		1.202E+03		3.199E+02	2.058E+01
	405.0	1231.9				1.255E+02	9.402E+00

Section values for warping

Wmin[cm2]	Wmax[cm2]	CM[cm6]	CMS[cm4]	ASwyy[cm6]	ASwzz[cm6]	ry[mm]	rz[mm]
-4897.91	4897.91	5829464667.	8885023.1	-4.55	-191.53	0.0	0.0

Design values of cross section

Mat / NoR	A[cm2] / It[cm4]	Ay/Az/Ayz [cm2]	Iy/Iz/Iyz [cm4]	ys/zs [mm]	modules [N/mm2]	gam [kN/m]
1	1986.74	607.50	16793721.	0.0	182609	15.60
	6270.0	1194.82	398580.9	1281.9	70234	

Design forces and moments
(C/E = characteristic plastic/elastic, D=plast.Design, F=elast. Design)

	N[kN]	Vy[kN]	Vz[kN]	Mt[kNm]	My[kNm]	Mz[kNm]	y[mm]	z[mm]	BUCK
C	66555.7	14099.76	24326.17	949.72	55012.14	5493.10	0.0	1282.	c c
C	0.0				0.00	0.00	0.0	0.0	COMB
E	66555.7	9399.84	20570.78	604.68	45669.88	3296.90	0.0	1282.	
D	57874.5	12260.66	21153.19	825.85	47836.64	4776.61	0.0	1282.	
D	0.0				0.00	0.00	0.0	0.0	COMB
F	57874.5	8173.78	17887.63	525.81	39712.94	2866.87	0.0	1282.	

Additional Design Data

M	periphery-O/-I [m2/m]	[m2/m]	deff [mm]	t-min [mm]	t-max [mm]	SMP [o/o]	thet-p [tm2/m]	thet-y [tm2/m]	thet-z [tm2/m]	thet-yz [tm2/m]
	8.077		49.2	45.0	52.0	0.0	1.350	1.318	0.031	

SOFiSTiK AG - www.sofistik.de

Composite bridge 38+50+38, b=14.25m, 2x2HL1100R HISTAR460 , slab 0.30m C30/37

Cross section No. 175.4 = CS 21 - reinf active:C2

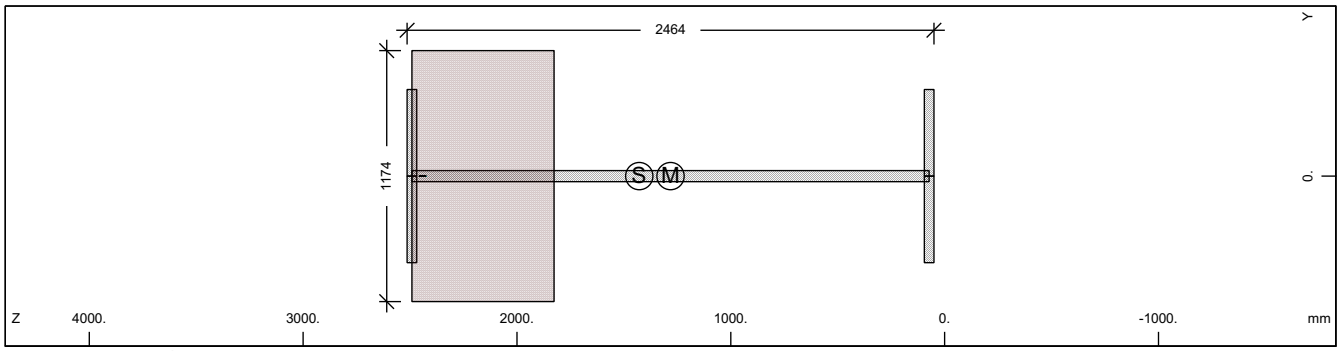

Cross section No. 175

Static properties of cross section

Mat NoR	A[cm2] It[cm4]	Ay/Az/Ayz [cm2]	Iy/Iz/Iyz [cm4]	ys/zs [mm]	modules [N/mm2]	gam [kN/m]
1	2383.73	607.50	19487588.	0.0	210000	35.11
	6270.0	1106.27	398580.9	1428.0	80769	

Additional static properties of cross section

Alfa-T [1/°K]	ymin ymax [mm]	zmin zmax [mm]	hymin hzmin [mm]	AK AB [cm2]	MB	Tau-T Tau-B [1/m3]	Tau-Vy Tau-Vz [1/m2]
1.2E-05	-587.0	-1378.0		5.245E+03		3.248E+00	2.058E+01
	587.0	1085.7		7.804E+03		1.255E+02	9.590E+00

Section values for warping

Wmin[cm2]	Wmax[cm2]	CM[cm6]	CMS[cm4]	ASwyy[cm6]	ASwzz[cm6]	ry[mm]	rz[mm]
-4897.91	4897.91	5829464667.	8885023.1	2.88	141.04	0.0	4.5

Partial cross sections

Mat NoR	A[cm2] It[cm4]	Ay/Az/Ayz [cm2]	Iy/Iz/Iyz [cm4]	ys/zs [mm]	modules [N/mm2]	gam [kN/m]
1	1986.74	607.50	16793721.	0.0	210000	15.60
	16257.1	1098.91	398580.9	1281.9	80769	
25	7803.85		2873484.2	0.0	10667	19.51
	35852853.	133.74	0.0	2158.9	4444	
210	0.64	0.00	0.0	0.0	200000	0.00
	2.2	0.00	0.0	2441.2	76923	

Design values of cross section

Mat NoR	A[cm2] It[cm4]	Ay/Az/Ayz [cm2]	Iy/Iz/Iyz [cm4]	ys/zs [mm]	modules [N/mm2]	gam [kN/m]
1	2291.24	607.50	18939537.	0.0	182609	35.11
	6270.0	1104.55	398580.9	1398.5	70234	

Design forces and moments
(C/E = characteristic plastic/elastic, D=plast.Design, F=elast. Design)

	N[kN]	Vy[kN]	Vz[kN]	Mt[kNm]	My[kNm]	Mz[kNm]	y[mm]	z[mm]	BUCK
C	66587.8	14118.33	37664.39	8515.83	55049.40	9049.71	6.9	1283.	c c
C	-5059.1				55416.71	0.00	0.0	1428.	COMB
C	-11705.8				0.00	8929.00	0.0	0.0	COMB
C	-89999.4	14118.33	37664.39	8515.83	-60581.5	-8888.76	-6.9	1815.	
C	-18352.4				-72527.5	0.00	0.0	1428.	COMB
C	-11705.8				0.00	-8929.00	0.0	0.0	COMB
E	79855.1	9399.84	20168.44	5080.47	47375.71	3296.90	0.0	1428.	
E	-79855.1	9399.84	20168.44	5080.47	-47375.7	-3296.90	0.0	1428.	
D	57902.4	12276.81	30139.05	5871.48	47869.04	7129.12	5.3	1283.	
D	-4399.2				48188.45	0.00	0.0	1428.	COMB
D	-7803.8				0.00	7067.26	0.0	0.0	COMB
D	-73510.1	12276.81	30139.05	5871.48	-51048.2	-7046.64	-5.3	1729.	
D	-11208.5				-59595.6	0.00	0.0	1428.	COMB
D	-7803.8				0.00	-7067.26	0.0	0.0	COMB

SOFiSTiK AG - www.sofistik.de

Composite bridge 38+50+38, b=14.25m, 2x2HL1100R HISTAR460 , slab 0.30m C30/37

Design forces and moments
(C/E = characteristic plastic/elastic, D=plast.Design, F=elast. Design)

	N[kN]	Vy[kN]	Vz[kN]	Mt[kNm]	My[kNm]	Mz[kNm]	y[mm]	z[mm]	BUCK
F	69439.2	8173.78	17537.78	3386.98	41196.27	2866.87	0.0	1428.	
F	-69439.2	8173.78	17537.78	3386.98	-41196.3	-2866.87	0.0	1428.	

Additional Design Data

M	periphery-O/-I [m2/m]	[m2/m]	deff [mm]	t-min [mm]	t-max [mm]	SMP [o/o]	thet-p [tm2/m]	thet-y [tm2/m]	thet-z [tm2/m]	thet-yz [tm2/m]
	9.411		50.7	32.0	664.7	0.0	2.088	2.057	0.031	
1	8.077		49.2	45.0	52.0	0.0	1.350	1.318	0.031	
25	1.329		1174.0			0.0	0.072	0.072		
**	0.004		32.0			0.0	0.000		0.000	

Cross section No. 175.5 = CS 30 - in-situ conc:C3

Cross section No. 176 - VFT (153)

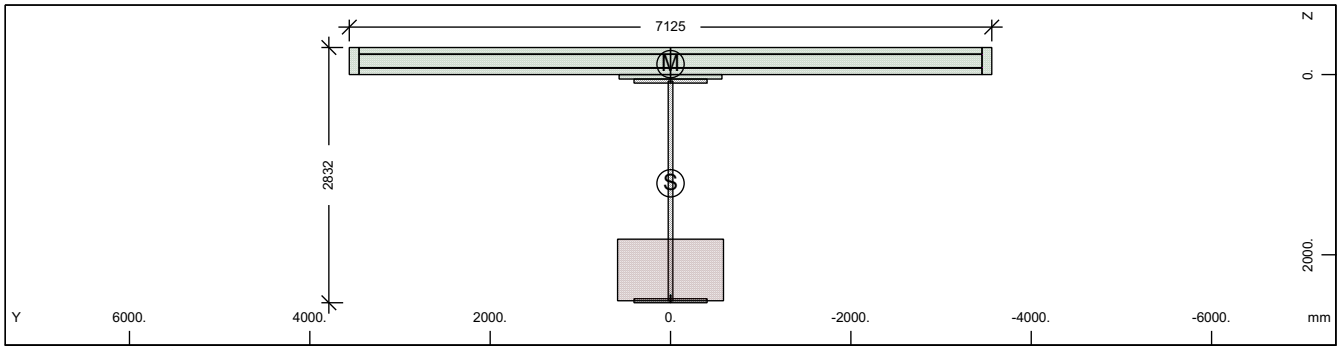

Cross section No. 176 - VFT (153)

Static properties of cross section

Mat NoR	A[cm2] It[cm4]	Ay/Az/Ayz [cm2]	Iy/Iz/Iyz [cm4]	ys/zs [mm]	y/z-sc [mm]	modules [N/mm2]	gam [kN/m]
1	2817.18	361.12	28793797.	0.0	0.0	210000	90.57
	6270.0	851.49	16834040.	1206.6	-115.9	80769	

Additional static properties of cross section

Alfa-T [1/°K]	ymin ymax [mm]	zmin zmax [mm]	hymin hzmin [mm]	AK AB [cm2]	MB	Tau-T Tau-B [1/m3]	Tau-Vy Tau-Vz [1/m2]
1.2E-05	-3562.5	-1506.6		5.388E+03		3.162E+00	3.375E+01
	3562.5	1325.3		2.996E+04		1.255E+02	1.636E+01

Section values for warping

Wmin[cm2]	Wmax[cm2]	CM[cm6]	CMS[cm4]	ASwyy[cm6]	ASwzz[cm6]	ry[mm]	rz[mm]
-10632.22	10632.22	1.492E+10	3572918.9	-327.45	-560.09	0.0	1802.7

Partial cross sections

Mat NoR	A[cm2] It[cm4]	Ay/Az/Ayz [cm2]	Iy/Iz/Iyz [cm4]	ys/zs [mm]	modules [N/mm2]	gam [kN/m]
1	1996.16	0.12	17093119.	0.0	210000	15.67
	16342.1	579.55	398580.9	1290.9	80769	
25	8016.72		3115107.5	0.0	10667	20.04
	36830855.	71.65	0.0	2167.9	4444	
210	0.64	0.00	0.0	0.0	200000	0.00
	2.2	0.00	0.0	2459.4	76923	
31	21945.00	18000.37	170028.4	0.0	0	54.86
	6417251.4	12406.90	904880243.	-145.5	0	
300	433.87	379.05	24405.1	0.0	200000	0.00
	14.3	280.87	17257227.	-150.0	76923	

SOFiSTiK AG - www.sofistik.de

Composite bridge 38+50+38, b=14.25m, 2x2HL1100R HISTAR460 , slab 0.30m C30/37

Design values of cross section

Mat NoR	A[cm2] It[cm4]	Ay/Az/Ayz [cm2]	Iy/Iz/Iyz [cm4]	ys/zs [mm]	modules [N/mm2]	gam [kN/m]
1	2722.17	361.12	27848163.	0.0	182609	90.57
	6270.0	850.07	16834039.	1173.0	70234	

Design forces and moments
(C/E = characteristic plastic/elastic, D=plast.Design, F=elast. Design)

	N[kN]	Vy[kN]	Vz[kN]	Mt[kNm]	My[kNm]	Mz[kNm]	y[mm]	z[mm]	BUCK
C	88597.1	62852.25	66998.45	107313.4	98464.77	103891.3	26.0	-73.9	c c
C	-84558.2				174222.7	0.00	0.0	1207.	COMB
C	-44942.6				0.00	103850.2	0.0	0.0	COMB
C	-165505.	62852.25	66998.45	107313.4	-107923.	-103267.	-26.0	1359.	
C	-5327.0				-108330.	0.00	0.0	1207.	COMB
C	-44942.6				0.00	-103850.	0.0	0.0	COMB
E	94375.6	8552.28	17648.55	5218.18	72785.26	25584.69	0.0	1207.	
E	-94375.6	8552.28	17648.55	5218.18	-72785.3	-25584.7	0.0	1207.	
D	77040.9	47307.33	50268.32	71755.01	84335.74	77972.26	20.0	-24.1	
D	-60171.0				133437.5	0.00	0.0	1207.	COMB
D	-29961.7				0.00	77951.17	0.0	0.0	COMB
D	-128313.	47307.33	50268.31	71755.00	-89508.4	-77651.9	-20.0	1199.	
D	247.6				-89509.4	0.00	0.0	1207.	COMB
D	-29961.7				0.00	-77951.2	0.0	0.0	COMB
F	82065.8	7436.77	15346.57	3478.78	63291.53	22247.55	0.0	1207.	
F	-82065.8	7436.77	15346.57	3478.78	-63291.5	-22247.6	0.0	1207.	

Additional Design Data

M	periphery-O/-I [m2/m]	[m2/m]	deff [mm]	t-min [mm]	t-max [mm]	SMP [o/o]	thet-p [tm2/m]	thet-y [tm2/m]	thet-z [tm2/m]	thet-yz [tm2/m]
	53.648		10.5	3.1	682.9	0.0	32.799	10.146	22.653	
1	8.114		49.2	45.0	52.0	0.0	1.373	1.342	0.031	
25	1.366		1174.0			0.0	0.078	0.078		
**	0.004		32.0			0.0	0.000		0.000	
31	16.530		265.5	50.0	300.0	0.0	22.626	0.004	22.622	
**	27.635		3.1	3.1	3.1	0.0	0.000	0.000	0.000	

Cross section No. 176.1 = CS 1 - steel alone

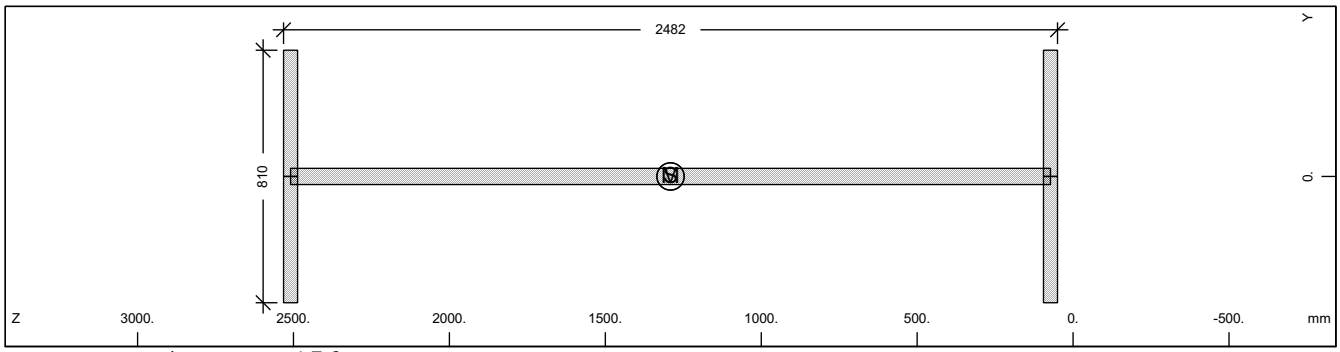

Cross section No. 176

Static properties of cross section

Mat NoR	A[cm2] It[cm4]	Ay/Az/Ayz [cm2]	Iy/Iz/Iyz [cm4]	ys/zs [mm]	modules [N/mm2]	gam [kN/m]
1	1996.16	607.50	17093119.	0.0	210000	15.67
	6270.0	1203.87	398580.9	1290.9	80769	

Additional static properties of cross section

Alfa-T [1/°K]	ymin / ymax [mm]	zmin / zmax [mm]	hymin / hzmin [mm]	AK / AB [cm2]	MB	Tau-T / Tau-B [1/m3]	Tau-Vy / Tau-Vz [1/m2]
1.2E-05	-405.0	-1240.9		1.209E+03		3.182E+02	2.058E+01
	405.0	1240.9				1.255E+02	9.339E+00

SOFiSTiK AG - www.sofistik.de

Composite bridge 38+50+38, b=14.25m, 2x2HL1100R HISTAR460 , slab 0.30m C30/37

Section values for warping

Wmin[cm2]	Wmax[cm2]	CM[cm6]	CMS[cm4]	ASwyy[cm6]	ASwzz[cm6]	ry[mm]	rz[mm]
-4934.63	4934.635917195720.		9018739.4	1.73	74.39	0.0	0.0

Design values of cross section

Mat NoR	A[cm2] It[cm4]	Ay/Az/Ayz [cm2]	Iy/Iz/Iyz [cm4]	ys/zs [mm]	modules [N/mm2]	gam [kN/m]
1	1996.16	607.50	17093119.	0.0	182609	15.67
	6270.0	1203.87	398580.9	1290.9	70234	

Design forces and moments
(C/E = characteristic plastic/elastic, D=plast.Design, F=elast. Design)

	N[kN]	Vy[kN]	Vz[kN]	Mt[kNm]	My[kNm]	Mz[kNm]	y[mm]	z[mm]	BUCK
C	66871.5	14099.76	24508.53	954.47	55616.97	5497.21	0.0	1291.	c c
C	0.0				0.00	0.00	0.0	0.0	COMB
E	66871.5	9399.84	20709.82	607.84	46144.47	3296.90	0.0	1291.	
D	58149.2	12260.66	21311.77	829.97	48362.59	4780.18	0.0	1291.	
D	0.0				0.00	0.00	0.0	0.0	COMB
F	58149.2	8173.78	18008.54	528.56	40125.62	2866.87	0.0	1291.	

Additional Design Data

M	periphery-O/-I [m2/m]	[m2/m]	deff [mm]	t-min [mm]	t-max [mm]	SMP [o/o]	thet-p [tm2/m]	thet-y [tm2/m]	thet-z [tm2/m]	thet-yz [tm2/m]
	8.114		49.2	45.0	52.0	0.0	1.373	1.342	0.031	

Cross section No. 176.2 = CS 10 - prefab. slab C1

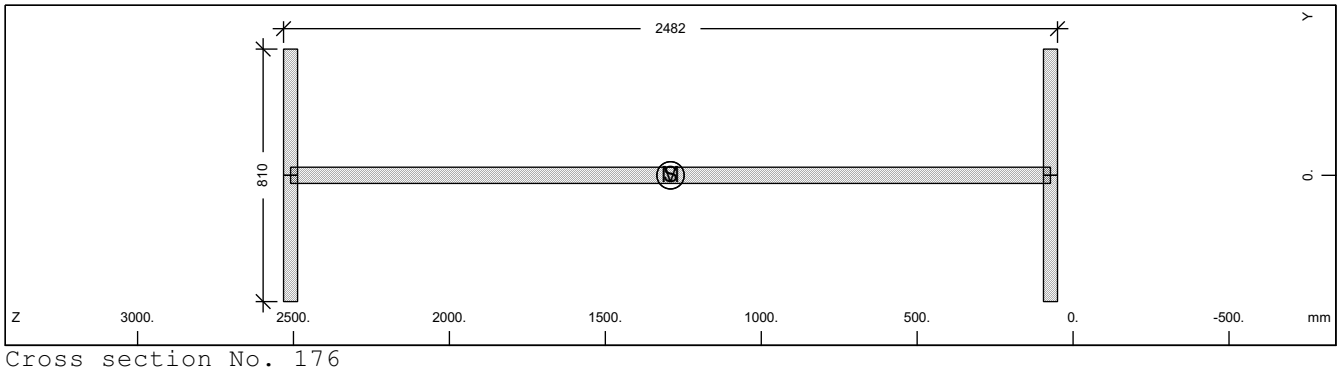

Cross section No. 176

Static properties of cross section

Mat NoR	A[cm2] It[cm4]	Ay/Az/Ayz [cm2]	Iy/Iz/Iyz [cm4]	ys/zs [mm]	modules [N/mm2]	gam [kN/m]
1	1996.16	607.50	17093119.	0.0	210000	15.67
	6270.0	1203.87	398580.9	1290.9	80769	

Additional static properties of cross section

Alfa-T [1/°K]	ymin ymax [mm]	zmin zmax [mm]	hymin hzmin [mm]	AK AB [cm2]	MB	Tau-T Tau-B [1/m3]	Tau-Vy Tau-Vz [1/m2]
1.2E-05	-405.0	-1240.9		1.209E+03		3.182E+02	2.058E+01
	405.0	1240.9				1.255E+02	9.339E+00

Section values for warping

Wmin[cm2]	Wmax[cm2]	CM[cm6]	CMS[cm4]	ASwyy[cm6]	ASwzz[cm6]	ry[mm]	rz[mm]
-4934.63	4934.635917195720.		9018739.4	1.73	74.39	0.0	0.0

Design values of cross section

Mat NoR	A[cm2] It[cm4]	Ay/Az/Ayz [cm2]	Iy/Iz/Iyz [cm4]	ys/zs [mm]	modules [N/mm2]	gam [kN/m]
1	1996.16	607.50	17093119.	0.0	182609	15.67
	6270.0	1203.87	398580.9	1290.9	70234	

SOFiSTiK AG - www.sofistik.de

Composite bridge 38+50+38, b=14.25m, 2x2HL1100R HISTAR460 , slab 0.30m C30/37

Design forces and moments
(C/E = characteristic plastic/elastic, D=plast.Design, F=elast. Design)

	N[kN]	Vy[kN]	Vz[kN]	Mt[kNm]	My[kNm]	Mz[kNm]	y[mm]	z[mm]	BUCK
C	66871.5	14099.76	24508.53	954.47	55616.97	5497.21	0.0	1291.	c c
C	0.0				0.00	0.00	0.0	0.0	COMB
E	66871.5	9399.84	20709.82	607.84	46144.47	3296.90	0.0	1291.	
D	58149.2	12260.66	21311.77	829.97	48362.59	4780.18	0.0	1291.	
D	0.0				0.00	0.00	0.0	0.0	COMB
F	58149.2	8173.78	18008.54	528.56	40125.62	2866.87	0.0	1291.	

Additional Design Data

M	periphery-O/-I [m2/m]	[m2/m]	deff [mm]	t-min [mm]	t-max [mm]	SMP [o/o]	thet-p [tm2/m]	thet-y [tm2/m]	thet-z [tm2/m]	thet-yz [tm2/m]
	8.114		49.2	45.0	52.0	0.0	1.373	1.342	0.031	

Cross section No. 176.3 = CS 20 - in-situ conc:C2

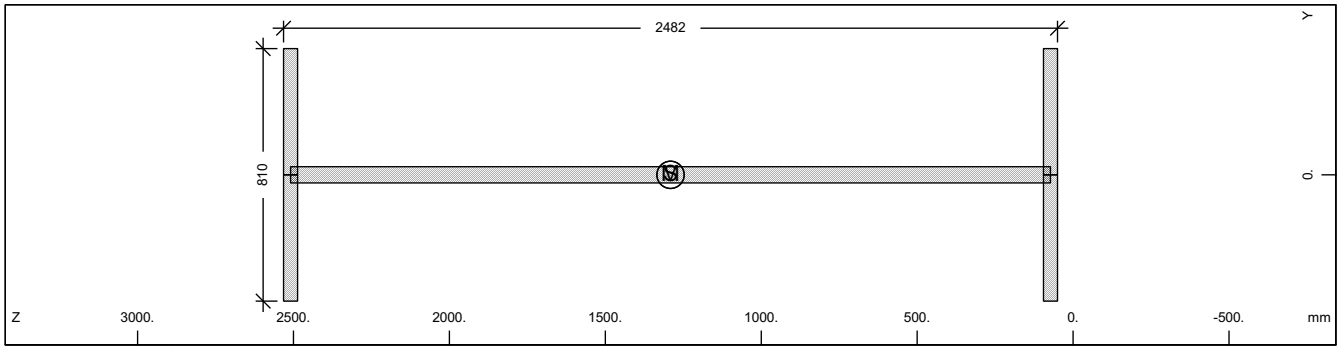

Cross section No. 176

Static properties of cross section

Mat NoR	A[cm2] It[cm4]	Ay/Az/Ayz [cm2]	Iy/Iz/Iyz [cm4]	ys/zs [mm]	modules [N/mm2]	gam [kN/m]
1	1996.16	607.50	17093119.	0.0	210000	15.67
	6270.0	1203.87	398580.9	1290.9	80769	

Additional static properties of cross section

Alfa-T [1/°K]	ymin ymax [mm]	zmin zmax [mm]	hymin hzmin [mm]	AK AB [cm2]	MB	Tau-T Tau-B [1/m3]	Tau-Vy Tau-Vz [1/m2]
1.2E-05	-405.0	-1240.9		1.209E+03		3.182E+02	2.058E+01
	405.0	1240.9				1.255E+02	9.339E+00

Section values for warping

Wmin[cm2]	Wmax[cm2]	CM[cm6]	CMS[cm4]	ASwyy[cm6]	ASwzz[cm6]	ry[mm]	rz[mm]
-4934.63	4934.635917195720.		9018739.4	1.73	74.39	0.0	0.0

Design values of cross section

Mat NoR	A[cm2] It[cm4]	Ay/Az/Ayz [cm2]	Iy/Iz/Iyz [cm4]	ys/zs [mm]	modules [N/mm2]	gam [kN/m]
1	1996.16	607.50	17093119.	0.0	182609	15.67
	6270.0	1203.87	398580.9	1290.9	70234	

Design forces and moments
(C/E = characteristic plastic/elastic, D=plast.Design, F=elast. Design)

	N[kN]	Vy[kN]	Vz[kN]	Mt[kNm]	My[kNm]	Mz[kNm]	y[mm]	z[mm]	BUCK
C	66871.5	14099.76	24508.53	954.47	55616.97	5497.21	0.0	1291.	c c
C	0.0				0.00	0.00	0.0	0.0	COMB
E	66871.5	9399.84	20709.82	607.84	46144.47	3296.90	0.0	1291.	
D	58149.2	12260.66	21311.77	829.97	48362.59	4780.18	0.0	1291.	
D	0.0				0.00	0.00	0.0	0.0	COMB
F	58149.2	8173.78	18008.54	528.56	40125.62	2866.87	0.0	1291.	

SOFiSTiK AG - www.sofistik.de

Composite bridge 38+50+38, b=14.25m, 2x2HL1100R HISTAR460 , slab 0.30m C30/37

Additional Design Data

M	periphery-O/-I [m2/m]	[m2/m]	deff [mm]	t-min [mm]	t-max [mm]	SMP [o/o]	thet-p [tm2/m]	thet-y [tm2/m]	thet-z [tm2/m]	thet-yz [tm2/m]
	8.114		49.2	45.0	52.0	0.0	1.373	1.342	0.031	

Cross section No. 176.4 = CS 21 - reinf active:C2

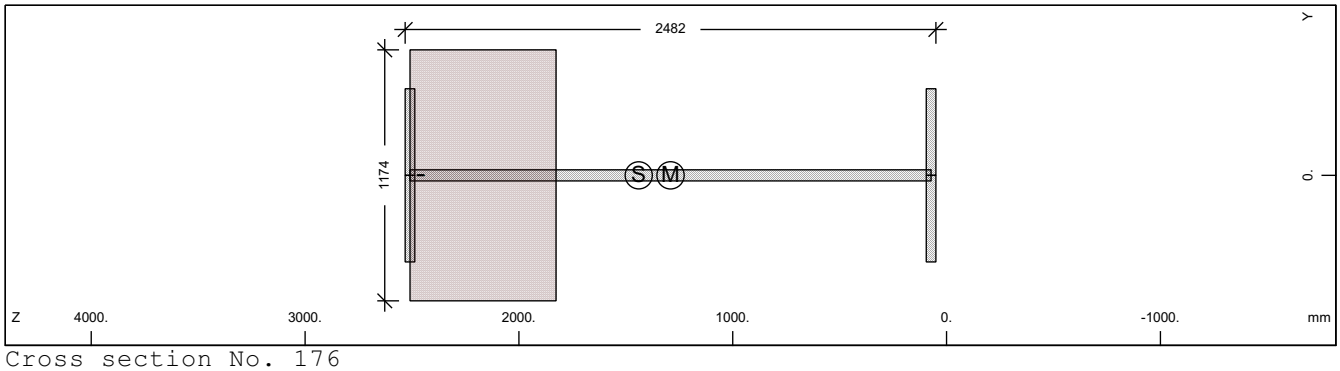

Cross section No. 176

Static properties of cross section

Mat NoR	A[cm2] It[cm4]	Ay/Az/Ayz [cm2]	Iy/Iz/Iyz [cm4]	ys/zs [mm]	modules [N/mm2]	gam [kN/m]
1	2403.98	607.50	19858967.	0.0	210000	35.71
	6270.0	1112.10	398580.9	1439.8	80769	

Additional static properties of cross section

Alfa-T [1/°K]	ymin ymax [mm]	zmin zmax [mm]	hymin hzmin [mm]	AK AB [cm2]	MB	Tau-T Tau-B [1/m3]	Tau-Vy Tau-Vz [1/m2]
1.2E-05	-587.0	-1389.8		5.388E+03		3.162E+00	2.058E+01
	587.0	1092.1		8.017E+03		1.255E+02	9.533E+00

Section values for warping

Wmin[cm2]	Wmax[cm2]	CM[cm6]	CMS[cm4]	ASwyy[cm6]	ASwzz[cm6]	ry[mm]	rz[mm]
-4934.63	4934.63	5917195720.	9018738.6	1.20	59.73	0.0	3.9

Partial cross sections

Mat NoR	A[cm2] It[cm4]	Ay/Az/Ayz [cm2]	Iy/Iz/Iyz [cm4]	ys/zs [mm]	modules [N/mm2]	gam [kN/m]
1	1996.16	607.50	17093119.	0.0	210000	15.67
	16342.1	1104.45	398580.9	1290.9	80769	
25	8016.72		3115107.5	0.0	10667	20.04
	36830855.	139.03	0.0	2167.9	4444	
210	0.64	0.00	0.0	0.0	200000	0.00
	2.2	0.00	0.0	2459.4	76923	

Design values of cross section

Mat NoR	A[cm2] It[cm4]	Ay/Az/Ayz [cm2]	Iy/Iz/Iyz [cm4]	ys/zs [mm]	modules [N/mm2]	gam [kN/m]
1	2308.96	607.50	19297555.	0.0	182609	35.71
	6270.0	1110.31	398580.9	1409.8	70234	

Design forces and moments
(C/E = characteristic plastic/elastic, D=plast.Design, F=elast. Design)

	N[kN]	Vy[kN]	Vz[kN]	Mt[kNm]	My[kNm]	Mz[kNm]	y[mm]	z[mm]	BUCK
C	66903.7	14118.33	38198.00	8726.75	55654.53	9153.26	7.0	1292.	c c
C	-5153.7				56035.71	0.00	0.0	1440.	COMB
C	-12025.1				0.00	9026.83	0.0	0.0	COMB
C	-90953.8	14118.33	38198.00	8726.75	-61035.3	-8984.68	-7.0	1817.	
C	-18896.4				-73547.9	0.00	0.0	1440.	COMB
C	-12025.1				0.00	-9026.83	0.0	0.0	COMB
E	80533.2	9399.84	20288.98	5218.14	47869.24	3296.90	0.0	1440.	
E	-80533.2	9399.84	20288.98	5218.14	-47869.2	-3296.90	0.0	1440.	
D	58177.1	12276.81	30531.80	6013.05	48395.24	7198.12	5.4	1292.	

SOFiSTiK AG - www.sofistik.de

Composite bridge 38+50+38, b=14.25m, 2x2HL1100R HISTAR460 , slab 0.30m C30/37

Design forces and moments
(C/E = characteristic plastic/elastic, D=plast.Design, F=elast. Design)

	N[kN]	Vy[kN]	Vz[kN]	Mt[kNm]	My[kNm]	Mz[kNm]	y[mm]	z[mm]	BUCK
D	-4481.5				48726.71	0.00	0.0	1440.	COMB
D	-8016.7				0.00	7133.31	0.0	0.0	COMB
D	-74210.6	12276.81	30531.80	6013.05	-51712.0	-7111.71	-5.4	1746.	
D	-11551.9				-60401.5	0.00	0.0	1440.	COMB
D	-8016.7				0.00	-7133.31	0.0	0.0	COMB
F	70028.9	8173.78	17642.60	3478.76	41625.42	2866.87	0.0	1440.	
F	-70028.9	8173.78	17642.60	3478.76	-41625.4	-2866.87	0.0	1440.	

Additional Design Data

M	periphery-O/-I [m2/m]	[m2/m]	deff [mm]	t-min [mm]	t-max [mm]	SMP [o/o]	thet-p [tm2/m]	thet-y [tm2/m]	thet-z [tm2/m]	thet-yz [tm2/m]
	9.483		50.7	32.0	682.9	0.0	2.127	2.096	0.031	
1	8.114		49.2	45.0	52.0	0.0	1.373	1.342	0.031	
25	1.366		1174.0			0.0	0.078	0.078		
**	0.004		32.0			0.0	0.000		0.000	

Cross section No. 176.5 = CS 30 - in-situ conc:C3

Cross section No. 177 - VFT (153)

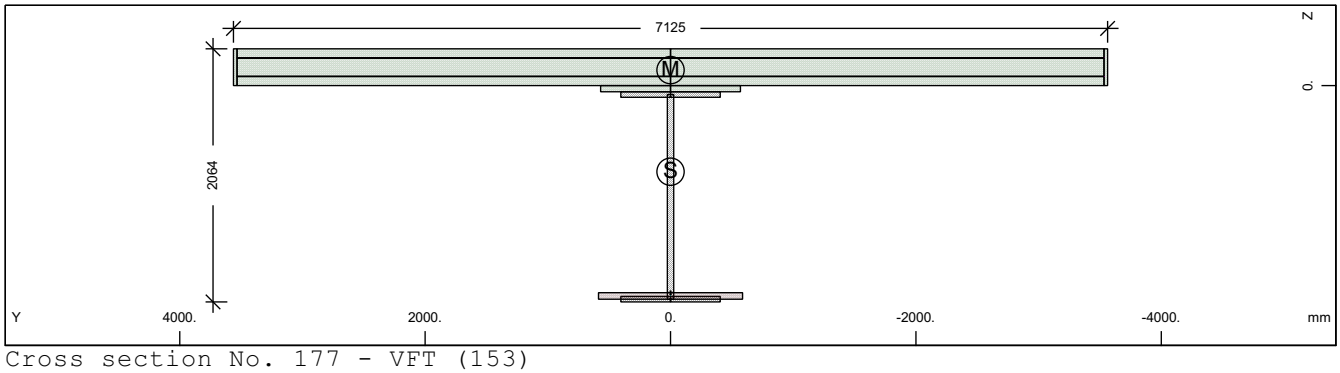

Cross section No. 177 - VFT (153)

Static properties of cross section

Mat NoR	A[cm2] It[cm4]	Ay/Az/Ayz [cm2]	Iy/Iz/Iyz [cm4]	ys/zs [mm]	y/z-sc [mm]	modules [N/mm2]	gam [kN/m]
1	2051.50	368.22	11179625.	0.0	0.0	210000	68.95
	6270.0	483.79	17983471.	701.8	-126.6	80769	

Additional static properties of cross section

Alfa-T [1/°K]	ymin ymax [mm]	zmin zmax [mm]	hymin hzmin [mm]	AK AB [cm2]	MB	Tau-T Tau-B [1/m3]	Tau-Vy Tau-Vz [1/m2]
1.2E-05	-3562.5	-1001.8		4.476E+02		3.806E+01	3.305E+01
	3562.5	1061.9		2.257E+04		1.255E+02	2.789E+01

Section values for warping

Wmin[cm2]	Wmax[cm2]	CM[cm6]	CMS[cm4]	ASwyy[cm6]	ASwzz[cm6]	ry[mm]	rz[mm]
-7564.50	7564.508117049965.		1120143.4	-204.17	-126.93	0.0	517.4

Partial cross sections

Mat NoR	A[cm2] It[cm4]	Ay/Az/Ayz [cm2]	Iy/Iz/Iyz [cm4]	ys/zs [mm]	modules [N/mm2]	gam [kN/m]
1	1596.73	0.11	7088401.2	0.0	210000	12.53
	12741.8	240.63	398580.9	906.9	80769	
25	620.94		1447.5	0.0	10667	1.55
	2852745.4	0.09	0.0	1714.8	4444	
210	0.64	0.00	0.0	0.0	200000	0.00
	2.2	0.00	0.0	1691.2	76923	
31	21945.00	16399.22	170028.4	0.0	0	54.86
	6417251.4	10473.13	904880243.	-145.5	0	

SOFiSTiK AG - www.sofistik.de

Composite bridge 38+50+38, b=14.25m, 2x2HL1100R HISTAR460 , slab 0.30m C30/37

300	443.75	386.52	24961.2	0.0	200000	0.00
	14.6	254.84	18464130.	-150.0	76923	

Design values of cross section

Mat NoR	A[cm2] It[cm4]	Ay/Az/Ayz [cm2]	Iy/Iz/Iyz [cm4]	ys/zs [mm]	modules [N/mm2]	gam [kN/m]
1	2044.14	368.22	11103822.	0.0	182609	68.95
	6270.0	483.34	17983471.	698.1	70234	

Design forces and moments
(C/E = characteristic plastic/elastic, D=plast.Design, F=elast. Design)

	N[kN]	Vy[kN]	Vz[kN]	Mt[kNm]	My[kNm]	Mz[kNm]	y[mm]	z[mm]	BUCK
C	75710.2	63137.67	47069.75	99949.84	59657.41	101738.4	60.4	-75.8	c c
C	-80846.2				107944.6	0.00	0.0	701.8	COMB
C	-33848.9				0.00	102147.4	0.0	0.0	COMB
C	-139878.	63137.67	47069.75	99949.84	-51572.4	-101626.	-60.4	324.6	
C	13148.3				-54053.4	0.00	0.0	701.8	COMB
C	-33848.9				0.00	-102147.	0.0	0.0	COMB
E	68725.3	8733.64	10348.86	433.52	35268.12	26722.64	0.0	701.8	
E	-68725.3	8733.64	10348.86	433.52	-35268.1	-26722.6	0.0	701.8	
D	65834.9	47555.52	35414.98	66805.27	50778.27	76913.23	21.7	-74.2	
D	-56943.2				82547.57	0.00	0.0	701.8	COMB
D	-22565.9				0.00	77131.13	0.0	0.0	COMB
D	-108613.	47555.52	35414.98	66805.27	-44317.7	-76886.3	-21.7	312.1	
D	11811.3				-46620.1	0.00	0.0	701.8	COMB
D	-22565.9				0.00	-77131.1	0.0	0.0	COMB
F	59761.1	7594.47	8999.01	289.02	30667.93	23237.08	0.0	701.8	
F	-59761.1	7594.47	8999.01	289.02	-30667.9	-23237.1	0.0	701.8	

Additional Design Data

M	periphery-O/-I [m2/m]	[m2/m]	deff [mm]	t-min [mm]	t-max [mm]	SMP [o/o]	thet-p [tm2/m]	thet-y [tm2/m]	thet-z [tm2/m]	thet-yz [tm2/m]
	51.482		8.0	3.1	300.0	0.0	24.764	2.111	22.653	
1	6.577		48.6	45.0	52.0	0.0	0.588	0.556	0.031	
25	0.106		1174.0			0.0	0.000	0.000		
**	0.004		32.0			0.0	0.000		0.000	
31	16.530		265.5	50.0	300.0	0.0	22.626	0.004	22.622	
**	28.265		3.1	3.1	3.1	0.0	0.000	0.000	0.000	

Cross section No. 177.1 = CS 1 - steel alone

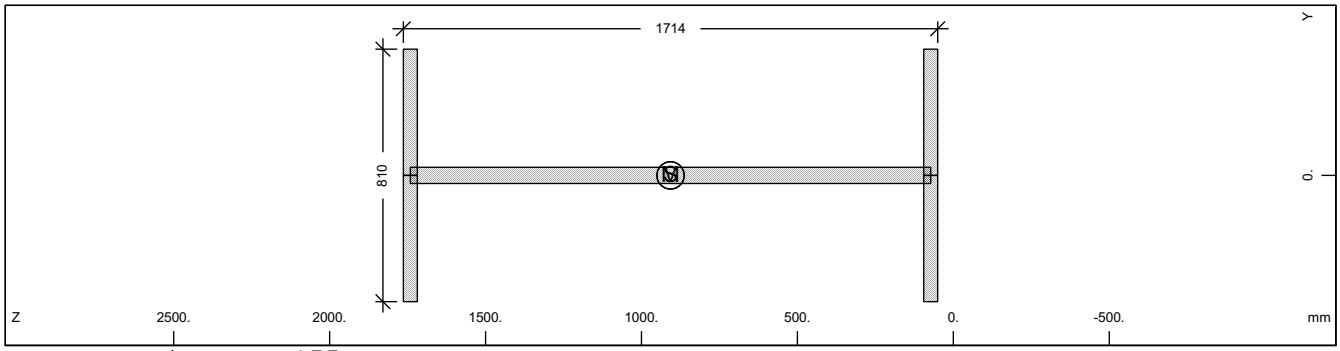

Cross section No. 177

Static properties of cross section

Mat NoR	A[cm2] It[cm4]	Ay/Az/Ayz [cm2]	Iy/Iz/Iyz [cm4]	ys/zs [mm]	modules [N/mm2]	gam [kN/m]
1	1596.73	607.50	7088401.2	0.0	210000	12.53
	6270.0	815.49	398580.9	906.9	80769	

SOFiSTiK AG - www.sofistik.de

Composite bridge 38+50+38, b=14.25m, 2x2HL1100R HISTAR460 , slab 0.30m C30/37

Additional static properties of cross section

Alfa-T	ymin ymax	zmin zmax	hymin hzmin	AK AB	MB	Tau-T Tau-B	Tau-Vy Tau-Vz
[1/°K]	[mm]	[mm]	[mm]	[cm2]		[1/m3]	[1/m2]
1.2E-05	-405.0	-856.9		9.424E+02		4.081E+02	2.058E+01
	405.0	856.9				1.255E+02	1.316E+01

Section values for warping

Wmin[cm2]	Wmax[cm2]	CM[cm6]	CMS[cm4]	ASwyy[cm6]	ASwzz[cm6]	ry[mm]	rz[mm]
-3379.12	3379.122774685865.		4229058.7	-1.20	-21.27	0.0	0.0

Design values of cross section

Mat NoR	A[cm2] It[cm4]	Ay/Az/Ayz [cm2]	Iy/Iz/Iyz [cm4]	ys/zs [mm]	modules [N/mm2]	gam [kN/m]
1	1596.73	607.50	7088401.2	0.0	182609	12.53
	6270.0	815.49	398580.9	906.9	70234	

Design forces and moments
(C/E = characteristic plastic/elastic, D=plast.Design, F=elast. Design)

	N[kN]	Vy[kN]	Vz[kN]	Mt[kNm]	My[kNm]	Mz[kNm]	y[mm]	z[mm]	BUCK
C	53490.3	14099.76	16782.87	753.60	32502.88	5323.25	0.0	906.9	c c
C	0.0				0.00	0.00	0.0	0.0	COMB
E	53490.3	9399.84	14695.65	473.93	27713.28	3296.90	0.0	906.9	
D	46513.3	12260.66	14593.80	655.30	28263.38	4628.91	0.0	906.9	
D	0.0				0.00	0.00	0.0	0.0	COMB
F	46513.3	8173.78	12778.83	412.11	24098.51	2866.87	0.0	906.9	

Additional Design Data

M	periphery-O/-I [m2/m]	[m2/m]	deff [mm]	t-min [mm]	t-max [mm]	SMP [o/o]	thet-p [tm2/m]	thet-y [tm2/m]	thet-z [tm2/m]	thet-yz [tm2/m]
	6.577		48.6	45.0	52.0	0.0	0.588	0.556	0.031	

Cross section No. 177.2 = CS 10 - prefab. slab C1

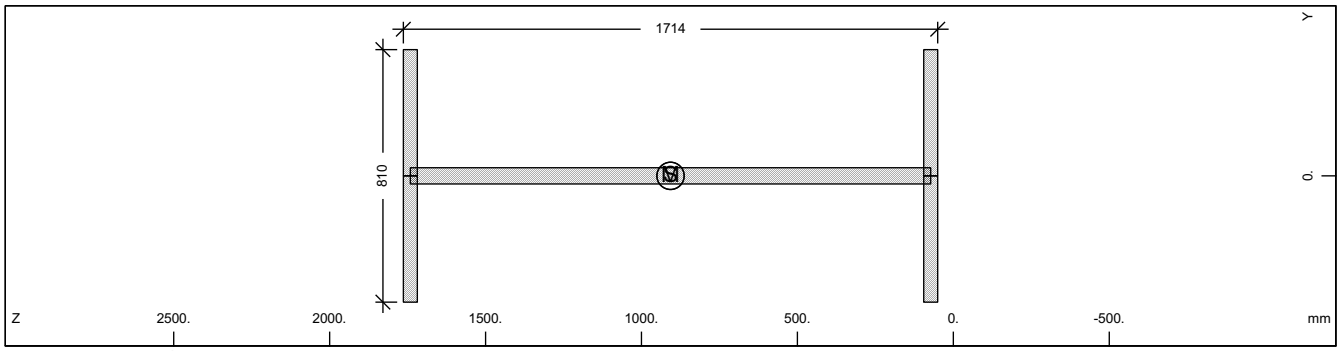

Cross section No. 177

Static properties of cross section

Mat NoR	A[cm2] It[cm4]	Ay/Az/Ayz [cm2]	Iy/Iz/Iyz [cm4]	ys/zs [mm]	modules [N/mm2]	gam [kN/m]
1	1596.73	607.50	7088401.2	0.0	210000	12.53
	6270.0	815.49	398580.9	906.9	80769	

Additional static properties of cross section

Alfa-T	ymin ymax	zmin zmax	hymin hzmin	AK AB	MB	Tau-T Tau-B	Tau-Vy Tau-Vz
[1/°K]	[mm]	[mm]	[mm]	[cm2]		[1/m3]	[1/m2]
1.2E-05	-405.0	-856.9		9.424E+02		4.081E+02	2.058E+01
	405.0	856.9				1.255E+02	1.316E+01

Section values for warping

Wmin[cm2]	Wmax[cm2]	CM[cm6]	CMS[cm4]	ASwyy[cm6]	ASwzz[cm6]	ry[mm]	rz[mm]
-3379.12	3379.122774685865.		4229058.7	-1.20	-21.27	0.0	0.0

SOFiSTiK AG - www.sofistik.de

Composite bridge 38+50+38, b=14.25m, 2x2HL1100R HISTAR460 , slab 0.30m C30/37

Design values of cross section

Mat NoR	A[cm2] It[cm4]	Ay/Az/Ayz [cm2]	Iy/Iz/Iyz [cm4]	ys/zs [mm]	modules [N/mm2]	gam [kN/m]
1	1596.73	607.50	7088401.2	0.0	182609	12.53
	6270.0	815.49	398580.9	906.9	70234	

Design forces and moments
(C/E = characteristic plastic/elastic, D=plast.Design, F=elast. Design)

	N[kN]	Vy[kN]	Vz[kN]	Mt[kNm]	My[kNm]	Mz[kNm]	y[mm]	z[mm]	BUCK
C	53490.3	14099.76	16782.87	753.60	32502.88	5323.25	0.0	906.9	c c
C	0.0				0.00	0.00	0.0	0.0	COMB
E	53490.3	9399.84	14695.65	473.93	27713.28	3296.90	0.0	906.9	
D	46513.3	12260.66	14593.80	655.30	28263.38	4628.91	0.0	906.9	
D	0.0				0.00	0.00	0.0	0.0	COMB
F	46513.3	8173.78	12778.83	412.11	24098.51	2866.87	0.0	906.9	

Additional Design Data

M	periphery-O/-I [m2/m] [m2/m]	deff [mm]	t-min [mm]	t-max [mm]	SMP [o/o]	thet-p [tm2/m]	thet-y [tm2/m]	thet-z [tm2/m]	thet-yz [tm2/m]
	6.577	48.6	45.0	52.0	0.0	0.588	0.556	0.031	

Cross section No. 177.3 = CS 20 - in-situ conc:C2

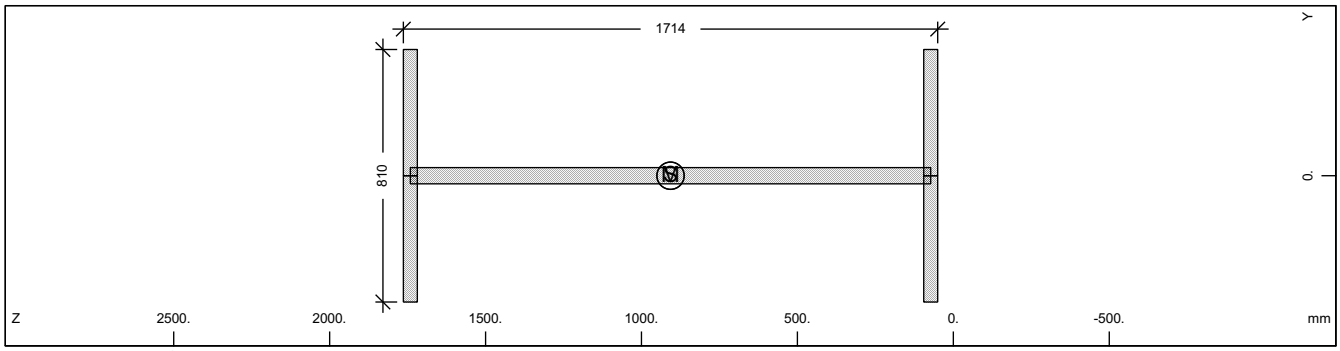

Cross section No. 177

Static properties of cross section

Mat NoR	A[cm2] It[cm4]	Ay/Az/Ayz [cm2]	Iy/Iz/Iyz [cm4]	ys/zs [mm]	modules [N/mm2]	gam [kN/m]
1	1596.73	607.50	7088401.2	0.0	210000	12.53
	6270.0	815.49	398580.9	906.9	80769	

Additional static properties of cross section

Alfa-T [1/°K]	ymin ymax [mm]	zmin zmax [mm]	hymin hzmin [mm]	AK AB [cm2]	MB	Tau-T Tau-B [1/m3]	Tau-Vy Tau-Vz [1/m2]
1.2E-05	-405.0	-856.9		9.424E+02		4.081E+02	2.058E+01
	405.0	856.9				1.255E+02	1.316E+01

Section values for warping

Wmin[cm2]	Wmax[cm2]	CM[cm6]	CMS[cm4]	ASwyy[cm6]	ASwzz[cm6]	ry[mm]	rz[mm]
-3379.12	3379.122774685865.		4229058.7	-1.20	-21.27	0.0	0.0

Design values of cross section

Mat NoR	A[cm2] It[cm4]	Ay/Az/Ayz [cm2]	Iy/Iz/Iyz [cm4]	ys/zs [mm]	modules [N/mm2]	gam [kN/m]
1	1596.73	607.50	7088401.2	0.0	182609	12.53
	6270.0	815.49	398580.9	906.9	70234	

Design forces and moments
(C/E = characteristic plastic/elastic, D=plast.Design, F=elast. Design)

	N[kN]	Vy[kN]	Vz[kN]	Mt[kNm]	My[kNm]	Mz[kNm]	y[mm]	z[mm]	BUCK
C	53490.3	14099.76	16782.87	753.60	32502.88	5323.25	0.0	906.9	c c
C	0.0				0.00	0.00	0.0	0.0	COMB
E	53490.3	9399.84	14695.65	473.93	27713.28	3296.90	0.0	906.9	

SOFiSTiK AG - www.sofistik.de

Composite bridge 38+50+38, b=14.25m, 2x2HL1100R HISTAR460 , slab 0.30m C30/37

Design forces and moments
(C/E = characteristic plastic/elastic, D=plast.Design, F=elast. Design)

	N[kN]	Vy[kN]	Vz[kN]	Mt[kNm]	My[kNm]	Mz[kNm]	y[mm]	z[mm]	BUCK
D	46513.3	12260.66	14593.80	655.30	28263.38	4628.91	0.0	906.9	
D	0.0				0.00	0.00	0.0	0.0	COMB
F	46513.3	8173.78	12778.83	412.11	24098.51	2866.87	0.0	906.9	

Additional Design Data

M	periphery-O/-I [m2/m]	[m2/m]	deff [mm]	t-min [mm]	t-max [mm]	SMP [o/o]	thet-p [tm2/m]	thet-y [tm2/m]	thet-z [tm2/m]	thet-yz [tm2/m]
	6.577		48.6	45.0	52.0	0.0	0.588	0.556	0.031	

Cross section No. 177.4 = CS 21 - reinf active:C2

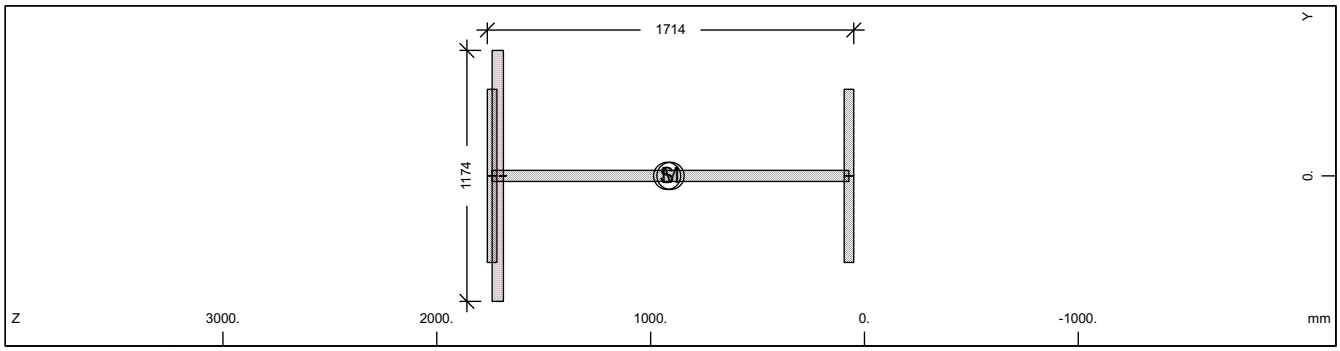

Cross section No. 177

Static properties of cross section

Mat NoR	A[cm2] It[cm4]	Ay/Az/Ayz [cm2]	Iy/Iz/Iyz [cm4]	ys/zs [mm]	modules [N/mm2]	gam [kN/m]
1	1628.88	607.50	7293967.9	0.0	210000	14.09
	6270.0	816.70	398580.9	922.8	80769	

Additional static properties of cross section

Alfa-T [1/°K]	ymin ymax [mm]	zmin zmax [mm]	hymin hzmin [mm]	AK AB [cm2]	MB	Tau-T Tau-B [1/m3]	Tau-Vy Tau-Vz [1/m2]
1.2E-05	-587.0	-872.8		4.476E+02		3.806E+01	2.058E+01
	587.0	840.9		6.209E+02		1.255E+02	1.313E+01

Section values for warping

Wmin[cm2]	Wmax[cm2]	CM[cm6]	CMS[cm4]	ASwyy[cm6]	ASwzz[cm6]	ry[mm]	rz[mm]
-3379.12	3379.122774685865.		4229058.7	-1.80	-32.93	0.0	6.4

Partial cross sections

Mat NoR	A[cm2] It[cm4]	Ay/Az/Ayz [cm2]	Iy/Iz/Iyz [cm4]	ys/zs [mm]	modules [N/mm2]	gam [kN/m]
1	1596.73	607.50	7088401.2	0.0	210000	12.53
	12741.8	816.68	398580.9	906.9	80769	
25	620.94		1447.5	0.0	10667	1.55
	2852745.4	0.38	0.0	1714.8	4444	
210	0.64	0.00	0.0	0.0	200000	0.00
	2.2	0.00	0.0	1691.2	76923	

Design values of cross section

Mat NoR	A[cm2] It[cm4]	Ay/Az/Ayz [cm2]	Iy/Iz/Iyz [cm4]	ys/zs [mm]	modules [N/mm2]	gam [kN/m]
1	1621.52	607.50	7247582.9	0.0	182609	14.09
	6270.0	816.69	398580.9	919.2	70234	

Design forces and moments
(C/E = characteristic plastic/elastic, D=plast.Design, F=elast. Design)

	N[kN]	Vy[kN]	Vz[kN]	Mt[kNm]	My[kNm]	Mz[kNm]	y[mm]	z[mm]	BUCK
C	53522.4	14118.33	18269.30	1362.70	32528.09	5597.96	0.8	907.8	c c
C	-523.1				32532.02	0.00	0.0	922.8	COMB

SOFiSTiK AG - www.sofistik.de

Composite bridge 38+50+38, b=14.25m, 2x2HL1100R HISTAR460 , slab 0.30m C30/37

Design forces and moments
(C/E = characteristic plastic/elastic, D=plast.Design, F=elast. Design)

	N[kN]	Vy[kN]	Vz[kN]	Mt[kNm]	My[kNm]	Mz[kNm]	y[mm]	z[mm]	BUCK
C	-931.4				0.00	5596.87	0.0	0.0	COMB
C	-55385.3	14118.33	18269.30	1362.70	-33981.5	-5596.39	-0.8	961.2	
C	-1339.7				-34007.3	0.00	0.0	922.8	COMB
C	-931.4				0.00	-5596.87	0.0	0.0	COMB
E	54567.4	9399.84	14733.37	433.49	27996.23	3296.90	0.0	922.8	
E	-54567.4	9399.84	14733.37	433.49	-27996.2	-3296.90	0.0	922.8	
D	46541.3	12276.81	15678.47	1062.93	28285.29	4811.86	0.6	907.8	
D	-454.9				28288.71	0.00	0.0	922.8	COMB
D	-620.9				0.00	4811.38	0.0	0.0	COMB
D	-47783.1	12276.81	15678.47	1062.93	-29262.0	-4811.09	-0.6	948.8	
D	-787.0				-29272.2	0.00	0.0	922.8	COMB
D	-620.9				0.00	-4811.38	0.0	0.0	COMB
F	47449.9	8173.78	12811.63	288.99	24344.55	2866.87	0.0	922.8	
F	-47449.9	8173.78	12811.63	288.99	-24344.5	-2866.87	0.0	922.8	

Additional Design Data

M	periphery-O/-I [m2/m]	[m2/m]	deff [mm]	t-min [mm]	t-max [mm]	SMP [o/o]	thet-p [tm2/m]	thet-y [tm2/m]	thet-z [tm2/m]	thet-yz [tm2/m]
	6.687		48.7	32.0	52.9	0.0	0.678	0.647	0.031	
1	6.577		48.6	45.0	52.0	0.0	0.588	0.556	0.031	
25	0.106		1174.0			0.0	0.000	0.000		
**	0.004		32.0			0.0	0.000		0.000	

Cross section No. 177.5 = CS 30 - in-situ conc:C3

Cross section No. 178 - VFT (153)

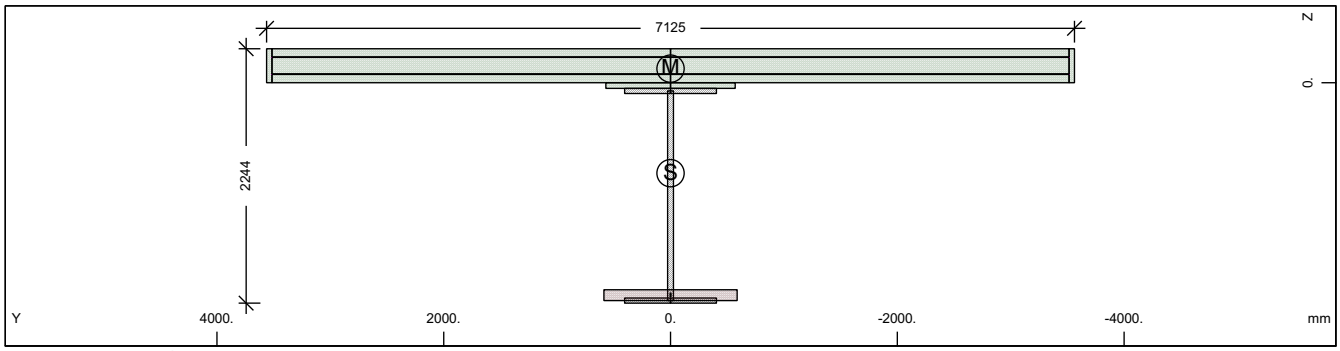

Cross section No. 178 - VFT (153)

Static properties of cross section

Mat NoR	A[cm2] It[cm4]	Ay/Az/Ayz [cm2]	Iy/Iz/Iyz [cm4]	ys/zs [mm]	y/z-sc [mm]	modules [N/mm2]	gam [kN/m]
1	2168.39	366.55	14109497.	0.0	0.0	210000	70.93
	6270.0	574.92	17708697.	797.9	-124.2	80769	

Additional static properties of cross section

Alfa-T [1/°K]	ymin ymax [mm]	zmin zmax [mm]	hymin hzmin [mm]	AK AB [cm2]	MB	Tau-T Tau-B [1/m3]	Tau-Vy Tau-Vz [1/m2]
1.2E-05	-3562.5	-1097.9		7.811E+02		2.181E+01	3.322E+01
	3562.5	1146.3		2.306E+04		1.255E+02	2.427E+01

Section values for warping

Wmin[cm2]	Wmax[cm2]	CM[cm6]	CMS[cm4]	ASwyy[cm6]	ASwzz[cm6]	ry[mm]	rz[mm]
-8285.88	8285.889	507848919.	1523558.9	-201.44	-160.50	0.0	868.6

SOFiSTiK AG - www.sofistik.de

Composite bridge 38+50+38, b=14.25m, 2x2HL1100R HISTAR460 , slab 0.30m C30/37

Partial cross sections

Mat NoR	A[cm2] It[cm4]	Ay/Az/Ayz [cm2]	Iy/Iz/Iyz [cm4]	ys/zs [mm]	modules [N/mm2]	gam [kN/m]
1	1690.59	0.11	8972411.7	0.0	210000	13.27
	13587.9	312.45	398580.9	997.1	80769	
25	1117.81		8444.7	0.0	10667	2.79
	5135494.9	0.54	0.0	1874.1	4444	
210	0.64	0.00	0.0	0.0	200000	0.00
	2.2	0.00	0.0	1871.7	76923	
31	21945.00	16758.74	170028.4	0.0	0	54.86
	6417251.4	11500.08904880243.		-145.5	0	
300	441.43	384.76	24830.5	0.0	200000	0.00
	14.5	275.05	18175617.	-150.0	76923	

Design values of cross section

Mat NoR	A[cm2] It[cm4]	Ay/Az/Ayz [cm2]	Iy/Iz/Iyz [cm4]	ys/zs [mm]	modules [N/mm2]	gam [kN/m]
1	2155.14	366.55	13955015.	0.0	182609	70.93
	6270.0	574.43	17708695.	791.3	70234	

Design forces and moments
(C/E = characteristic plastic/elastic, D=plast.Design, F=elast. Design)

	N[kN]	Vy[kN]	Vz[kN]	Mt[kNm]	My[kNm]	Mz[kNm]	y[mm]	z[mm]	BUCK
C	78738.5	63070.60	49705.07	100478.2	67855.31	101642.7	29.4	-75.3	c c
C	-80934.6				121227.0	0.00	0.0	797.9	COMB
C	-34594.2				0.00	101997.7	0.0	0.0	COMB
C	-142177.	63070.60	49705.07	100478.2	-60749.1	-101544.	-29.4	460.9	
C	11746.1				-62729.2	0.00	0.0	797.9	COMB
C	-34594.2				0.00	-101998.	0.0	0.0	COMB
E	72641.1	8690.97	11895.90	756.51	41234.28	26452.84	0.0	797.9	
E	-72641.1	8690.97	11895.90	756.51	-41234.3	-26452.8	0.0	797.9	
D	68468.3	47497.20	37540.23	67167.05	57902.55	76769.45	20.1	-73.8	
D	-57020.1				92813.42	0.00	0.0	797.9	COMB
D	-23062.8				0.00	76956.54	0.0	0.0	COMB
D	-110760.	47497.20	37540.23	67167.05	-51856.1	-76724.4	-20.1	438.5	
D	10894.4				-53814.9	0.00	0.0	797.9	COMB
D	-23062.8				0.00	-76956.5	0.0	0.0	COMB
F	63166.2	7557.36	10344.26	504.34	35855.89	23002.47	0.0	797.9	
F	-63166.2	7557.36	10344.26	504.34	-35855.9	-23002.5	0.0	797.9	

Additional Design Data

M	periphery-O/-I [m2/m]	[m2/m]	deff [mm]	t-min [mm]	t-max [mm]	SMP [o/o]	thet-p [tm2/m]	thet-y [tm2/m]	thet-z [tm2/m]	thet-yz [tm2/m]
	51.780		8.4	3.1	300.0	0.0	25.624	2.971	22.653	
1	6.938		48.7	45.0	52.0	0.0	0.736	0.704	0.031	
25	0.190		1174.0			0.0	0.000	0.000		
**	0.004		32.0			0.0	0.000		0.000	
31	16.530		265.5	50.0	300.0	0.0	22.626	0.004	22.622	
**	28.117		3.1	3.1	3.1	0.0	0.000	0.000	0.000	

SOFiSTiK AG - www.sofistik.de

Composite bridge 38+50+38, b=14.25m, 2x2HL1100R HISTAR460 , slab 0.30m C30/37

Cross section No. 178.1 = CS 1 - steel alone

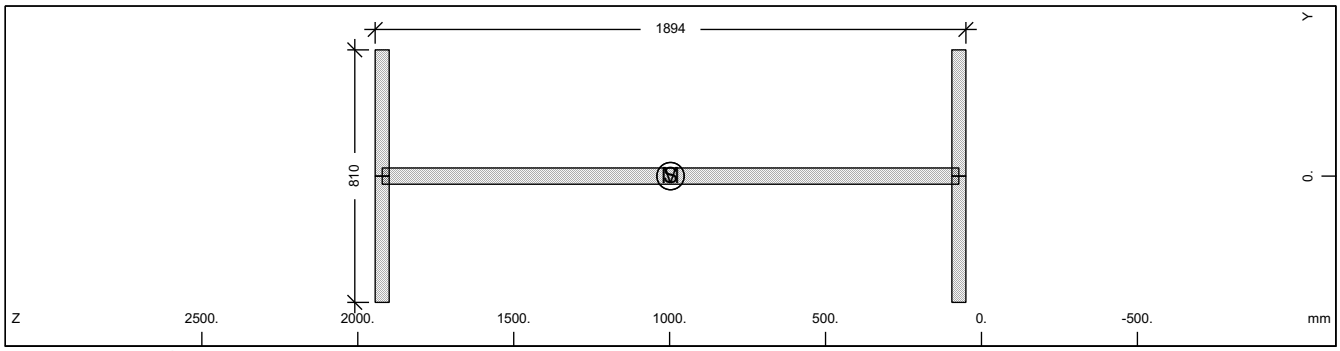

Cross section No. 178

Static properties of cross section

Mat NoR	A[cm2] It[cm4]	Ay/Az/Ayz [cm2]	Iy/Iz/Iyz [cm4]	ys/zs [mm]	modules [N/mm2]	gam [kN/m]
1	1690.59	607.50	8972411.7	0.0	210000	13.27
	6270.0	907.71	398580.9	997.1	80769	

Additional static properties of cross section

Alfa-T [1/°K]	ymin ymax [mm]	zmin zmax [mm]	hymin hzmin [mm]	AK AB [cm2]	MB	Tau-T Tau-B [1/m3]	Tau-Vy Tau-Vz [1/m2]
1.2E-05	-405.0	-947.1		1.005E+03		3.827E+02	2.058E+01
	405.0	947.1				1.255E+02	1.199E+01

Section values for warping

Wmin[cm2]	Wmax[cm2]	CM[cm6]	CMS[cm4]	ASwyy[cm6]	ASwzz[cm6]	ry[mm]	rz[mm]
-3744.66	3744.663	407458556.	5193504.0	0.90	20.16	0.0	0.0

Design values of cross section

Mat NoR	A[cm2] It[cm4]	Ay/Az/Ayz [cm2]	Iy/Iz/Iyz [cm4]	ys/zs [mm]	modules [N/mm2]	gam [kN/m]
1	1690.59	607.50	8972411.7	0.0	182609	13.27
	6270.0	907.71	398580.9	997.1	70234	

Design forces and moments
(C/E = characteristic plastic/elastic, D=plast.Design, F=elast. Design)

	N[kN]	Vy[kN]	Vz[kN]	Mt[kNm]	My[kNm]	Mz[kNm]	y[mm]	z[mm]	BUCK
C	56634.8	14099.76	18598.36	800.80	37472.61	5364.13	0.0	997.1	c c
C	0.0				0.00	0.00	0.0	0.0	COMB
E	56634.8	9399.84	16134.58	505.40	31736.21	3296.90	0.0	997.1	
D	49247.7	12260.66	16172.49	696.35	32584.88	4664.46	0.0	997.1	
D	0.0				0.00	0.00	0.0	0.0	COMB
F	49247.6	8173.78	14030.07	439.48	27596.70	2866.87	0.0	997.1	

Additional Design Data

M	periphery-O/-I [m2/m] [m2/m]	deff [mm]	t-min [mm]	t-max [mm]	SMP [o/o]	thet-p [tm2/m]	thet-y [tm2/m]	thet-z [tm2/m]	thet-yz [tm2/m]
	6.938	48.7	45.0	52.0	0.0	0.736	0.704	0.031	

SOFiSTiK AG - www.sofistik.de

Composite bridge 38+50+38, b=14.25m, 2x2HL1100R HISTAR460 , slab 0.30m C30/37

Cross section No. 178.2 = CS 10 - prefab. slab C1

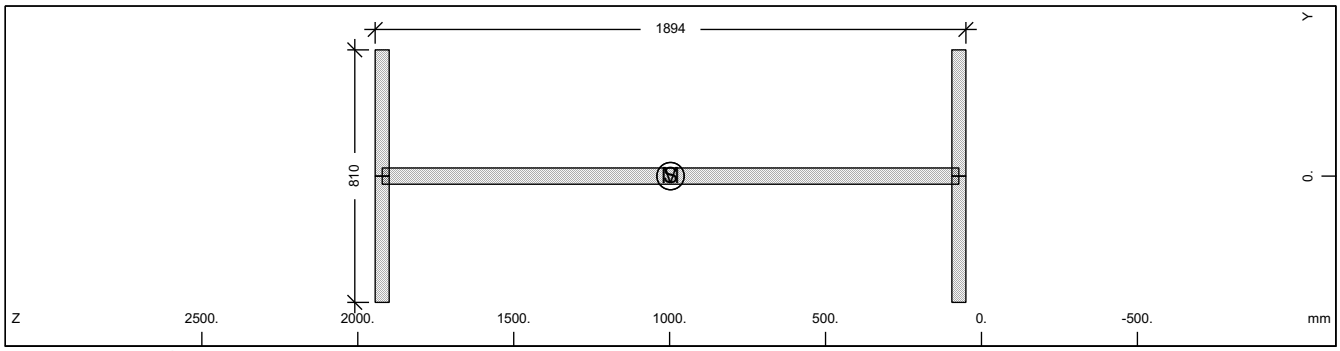

Cross section No. 178

Static properties of cross section

Mat NoR	A[cm2] It[cm4]	Ay/Az/Ayz [cm2]	Iy/Iz/Iyz [cm4]	ys/zs [mm]	modules [N/mm2]	gam [kN/m]
1	1690.59	607.50	8972411.7	0.0	210000	13.27
	6270.0	907.71	398580.9	997.1	80769	

Additional static properties of cross section

Alfa-T [1/°K]	ymin ymax [mm]	zmin zmax [mm]	hymin hzmin [mm]	AK AB [cm2]	MB	Tau-T Tau-B [1/m3]	Tau-Vy Tau-Vz [1/m2]
1.2E-05	-405.0	-947.1		1.005E+03		3.827E+02	2.058E+01
	405.0	947.1				1.255E+02	1.199E+01

Section values for warping

Wmin[cm2]	Wmax[cm2]	CM[cm6]	CMS[cm4]	ASwyy[cm6]	ASwzz[cm6]	ry[mm]	rz[mm]
-3744.66	3744.663	407458556.	5193504.0	0.90	20.16	0.0	0.0

Design values of cross section

Mat NoR	A[cm2] It[cm4]	Ay/Az/Ayz [cm2]	Iy/Iz/Iyz [cm4]	ys/zs [mm]	modules [N/mm2]	gam [kN/m]
1	1690.59	607.50	8972411.7	0.0	182609	13.27
	6270.0	907.71	398580.9	997.1	70234	

Design forces and moments
(C/E = characteristic plastic/elastic, D=plast.Design, F=elast. Design)

	N[kN]	Vy[kN]	Vz[kN]	Mt[kNm]	My[kNm]	Mz[kNm]	y[mm]	z[mm]	BUCK
C	56634.8	14099.76	18598.36	800.80	37472.61	5364.13	0.0	997.1	c c
C	0.0				0.00	0.00	0.0	0.0	COMB
E	56634.8	9399.84	16134.58	505.40	31736.21	3296.90	0.0	997.1	
D	49247.7	12260.66	16172.49	696.35	32584.88	4664.46	0.0	997.1	
D	0.0				0.00	0.00	0.0	0.0	COMB
F	49247.6	8173.78	14030.07	439.48	27596.70	2866.87	0.0	997.1	

Additional Design Data

M	periphery-O/-I [m2/m] [m2/m]	deff [mm]	t-min [mm]	t-max [mm]	SMP [o/o]	thet-p [tm2/m]	thet-y [tm2/m]	thet-z [tm2/m]	thet-yz [tm2/m]
	6.938	48.7	45.0	52.0	0.0	0.736	0.704	0.031	

SOFiSTiK AG - www.sofistik.de

Composite bridge 38+50+38, b=14.25m, 2x2HL1100R HISTAR460 , slab 0.30m C30/37

Cross section No. 178.3 = CS 20 - in-situ conc:C2

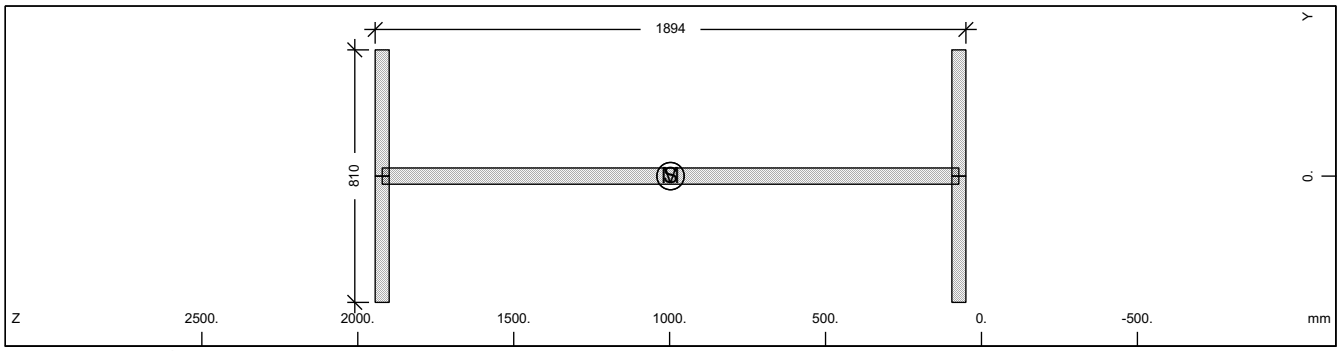

Cross section No. 178

Static properties of cross section

Mat NoR	A[cm2] It[cm4]	Ay/Az/Ayz [cm2]	Iy/Iz/Iyz [cm4]	ys/zs [mm]	modules [N/mm2]	gam [kN/m]
1	1690.59	607.50	8972411.7	0.0	210000	13.27
	6270.0	907.71	398580.9	997.1	80769	

Additional static properties of cross section

Alfa-T [1/°K]	ymin ymax [mm]	zmin zmax [mm]	hymin hzmin [mm]	AK AB [cm2]	MB	Tau-T Tau-B [1/m3]	Tau-Vy Tau-Vz [1/m2]
1.2E-05	-405.0	-947.1		1.005E+03		3.827E+02	2.058E+01
	405.0	947.1				1.255E+02	1.199E+01

Section values for warping

Wmin[cm2]	Wmax[cm2]	CM[cm6]	CMS[cm4]	ASwyy[cm6]	ASwzz[cm6]	ry[mm]	rz[mm]
-3744.66	3744.663	407458556.	5193504.0	0.90	20.16	0.0	0.0

Design values of cross section

Mat NoR	A[cm2] It[cm4]	Ay/Az/Ayz [cm2]	Iy/Iz/Iyz [cm4]	ys/zs [mm]	modules [N/mm2]	gam [kN/m]
1	1690.59	607.50	8972411.7	0.0	182609	13.27
	6270.0	907.71	398580.9	997.1	70234	

Design forces and moments
(C/E = characteristic plastic/elastic, D=plast.Design, F=elast. Design)

	N[kN]	Vy[kN]	Vz[kN]	Mt[kNm]	My[kNm]	Mz[kNm]	y[mm]	z[mm]	BUCK
C	56634.8	14099.76	18598.36	800.80	37472.61	5364.13	0.0	997.1	c c
C	0.0				0.00	0.00	0.0	0.0	COMB
E	56634.8	9399.84	16134.58	505.40	31736.21	3296.90	0.0	997.1	
D	49247.7	12260.66	16172.49	696.35	32584.88	4664.46	0.0	997.1	
D	0.0				0.00	0.00	0.0	0.0	COMB
F	49247.6	8173.78	14030.07	439.48	27596.70	2866.87	0.0	997.1	

Additional Design Data

M	periphery-O/-I [m2/m] [m2/m]	deff [mm]	t-min [mm]	t-max [mm]	SMP [o/o]	thet-p [tm2/m]	thet-y [tm2/m]	thet-z [tm2/m]	thet-yz [tm2/m]
	6.938	48.7	45.0	52.0	0.0	0.736	0.704	0.031	

SOFiSTiK AG - www.sofistik.de

Composite bridge 38+50+38, b=14.25m, 2x2HL1100R HISTAR460 , slab 0.30m C30/37

Cross section No. 178.4 = CS 21 - reinf active:C2

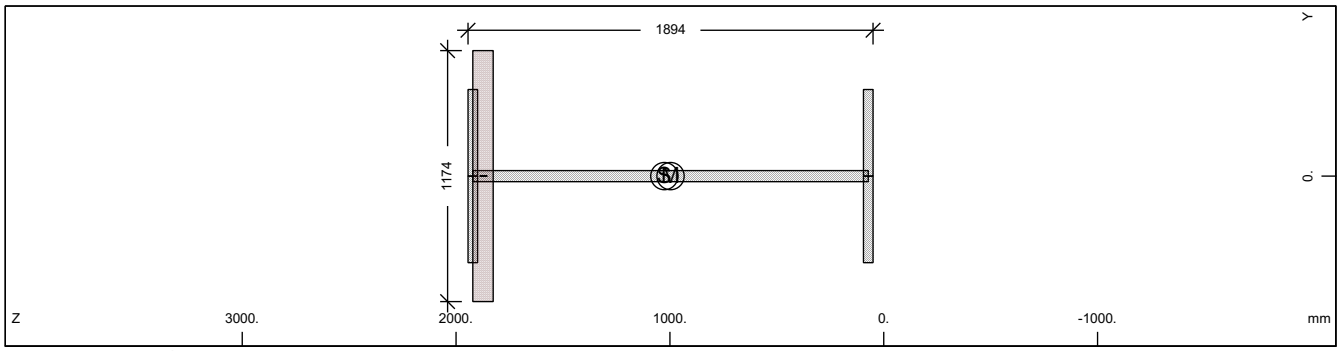

Cross section No. 178

Static properties of cross section

Mat NoR	A[cm2] It[cm4]	Ay/Az/Ayz [cm2]	Iy/Iz/Iyz [cm4]	ys/zs [mm]	modules [N/mm2]	gam [kN/m]
1	1747.98	607.50	9399727.0	0.0	210000	16.07
	6270.0	907.73	398580.9	1025.9	80769	

Additional static properties of cross section

Alfa-T [1/°K]	ymin ymax [mm]	zmin zmax [mm]	hymin hzmin [mm]	AK AB [cm2]	MB	Tau-T Tau-B [1/m3]	Tau-Vy Tau-Vz [1/m2]
1.2E-05	-587.0	-975.9		7.810E+02		2.181E+01	2.058E+01
	587.0	918.3		1.118E+03		1.255E+02	1.194E+01

Section values for warping

Wmin[cm2]	Wmax[cm2]	CM[cm6]	CMS[cm4]	ASwyy[cm6]	ASwzz[cm6]	ry[mm]	rz[mm]
-3744.66	3744.663	407458556.	5193504.0	2.23	52.52	0.0	11.2

Partial cross sections

Mat NoR	A[cm2] It[cm4]	Ay/Az/Ayz [cm2]	Iy/Iz/Iyz [cm4]	ys/zs [mm]	modules [N/mm2]	gam [kN/m]
1	1690.59	607.50	8972411.7	0.0	210000	13.27
	13587.9	907.63	398580.9	997.1	80769	
25	1117.81		8444.7	0.0	10667	2.79
	5135494.9	1.88	0.0	1874.1	4444	
210	0.64	0.00	0.0	0.0	200000	0.00
	2.2	0.00	0.0	1871.7	76923	

Design values of cross section

Mat NoR	A[cm2] It[cm4]	Ay/Az/Ayz [cm2]	Iy/Iz/Iyz [cm4]	ys/zs [mm]	modules [N/mm2]	gam [kN/m]
1	1734.73	607.50	9303584.8	0.0	182609	16.07
	6270.0	907.71	398580.9	1019.4	70234	

Design forces and moments
(C/E = characteristic plastic/elastic, D=plast.Design, F=elast. Design)

	N[kN]	Vy[kN]	Vz[kN]	Mt[kNm]	My[kNm]	Mz[kNm]	y[mm]	z[mm]	BUCK
C	56667.0	14118.33	20904.62	1891.14	37500.71	5859.73	1.3	998.1	c c
C	-971.0				37514.25	0.00	0.0	1026.	COMB
C	-1676.7				0.00	5856.50	0.0	0.0	COMB
C	-60020.4	14118.33	20904.62	1891.14	-40277.2	-5855.42	-1.3	1094.	
C	-2382.4				-40358.6	0.00	0.0	1026.	COMB
C	-1676.7				0.00	-5856.50	0.0	0.0	COMB
E	58557.4	9399.84	16192.13	756.48	32266.72	3296.90	0.0	1026.	
E	-58557.4	9399.84	16192.13	756.48	-32266.7	-3296.90	0.0	1026.	
D	49275.6	12276.81	17803.71	1424.80	32609.32	4994.58	1.1	998.0	
D	-844.3				32621.08	0.00	0.0	1026.	COMB
D	-1117.8				0.00	4992.76	0.0	0.0	COMB
D	-51511.2	12276.81	17803.71	1424.80	-34485.4	-4992.21	-1.1	1072.	
D	-1391.3				-34517.3	0.00	0.0	1026.	COMB
D	-1117.8				0.00	-4992.76	0.0	0.0	COMB

SOFiSTiK AG - www.sofistik.de

Composite bridge 38+50+38, b=14.25m, 2x2HL1100R HISTAR460 , slab 0.30m C30/37

Design forces and moments
(C/E = characteristic plastic/elastic, D=plast.Design, F=elast. Design)

	N[kN]	Vy[kN]	Vz[kN]	Mt[kNm]	My[kNm]	Mz[kNm]	y[mm]	z[mm]	BUCK
F	50919.4	8173.78	14080.11	504.32	28058.02	2866.87	0.0	1026.	
F	-50919.4	8173.78	14080.11	504.32	-28058.0	-2866.87	0.0	1026.	

Additional Design Data

M	periphery-O/-I [m2/m]	[m2/m]	deff [mm]	t-min [mm]	t-max [mm]	SMP [o/o]	thet-p [tm2/m]	thet-y [tm2/m]	thet-z [tm2/m]	thet-yz [tm2/m]
	7.133		49.0	32.0	95.2	0.0	0.913	0.882	0.031	
1	6.938		48.7	45.0	52.0	0.0	0.736	0.704	0.031	
25	0.190		1174.0			0.0	0.000	0.000		
**	0.004		32.0			0.0	0.000		0.000	

Cross section No. 178.5 = CS 30 - in-situ conc:C3

Cross section No. 179 - VFT (153)

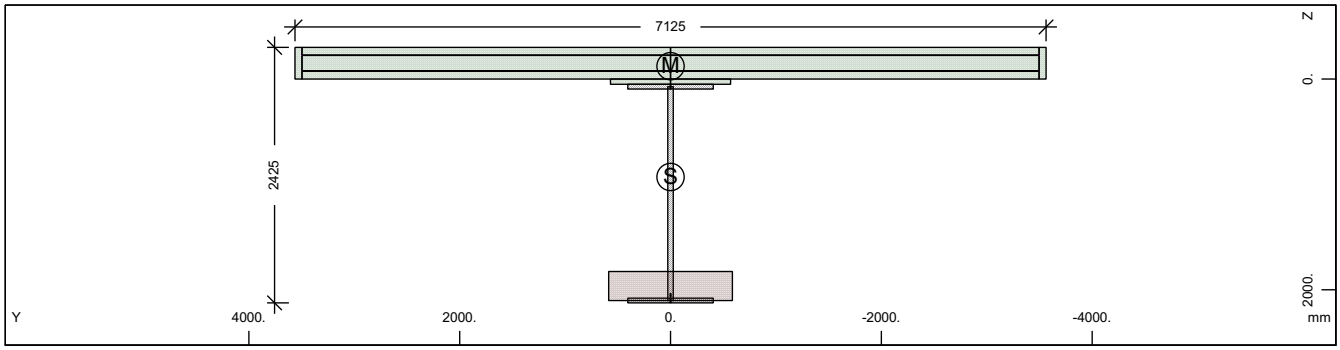

Cross section No. 179 - VFT (153)

Static properties of cross section

Mat NoR	A[cm2] It[cm4]	Ay/Az/Ayz [cm2]	Iy/Iz/Iyz [cm4]	ys/zs [mm]	y/z-sc [mm]	modules [N/mm2]	gam [kN/m]
1	2367.71	364.88	18252967.	0.0	0.0	210000	76.96
	6270.0	668.86	17436764.	930.0	-121.7	80769	

Additional static properties of cross section

Alfa-T [1/°K]	ymin ymax [mm]	zmin zmax [mm]	hymin hzmin [mm]	AK AB [cm2]	MB	Tau-T Tau-B [1/m3]	Tau-Vy Tau-Vz [1/m2]
1.2E-05	-3562.5	-1230.0		2.196E+03		7.757E+00	3.338E+01
	3562.5	1194.8		2.518E+04		1.255E+02	2.107E+01

Section values for warping

Wmin[cm2]	Wmax[cm2]	CM[cm6]	CMS[cm4]	ASwyy[cm6]	ASwzz[cm6]	ry[mm]	rz[mm]
-9007.06	9007.06	1.103E+10	2025261.9	-246.06	-257.57	0.0	1199.7

Partial cross sections

Mat NoR	A[cm2] It[cm4]	Ay/Az/Ayz [cm2]	Iy/Iz/Iyz [cm4]	ys/zs [mm]	modules [N/mm2]	gam [kN/m]
1	1784.47	0.11	11132163.	0.0	210000	14.01
	14434.1	397.54	398580.9	1087.4	80769	
25	3237.30		205130.8	0.0	10667	8.09
	14872970.	9.39	0.0	1964.4	4444	
210	0.64	0.00	0.0	0.0	200000	0.00
	2.2	0.00	0.0	2052.2	76923	
31	21945.00	17128.33	170028.4	0.0	0	54.86
	6417251.4	12073.07	904880243.	-145.5	0	
300	439.11	383.00	24699.8	0.0	200000	0.00
	14.4	283.82	17890087.	-150.0	76923	

SOFiSTiK AG - www.sofistik.de

Composite bridge 38+50+38, b=14.25m, 2x2HL1100R HISTAR460 , slab 0.30m C30/37

Design values of cross section

Mat NoR	A[cm2] It[cm4]	Ay/Az/Ayz [cm2]	Iy/Iz/Iyz [cm4]	ys/zs [mm]	modules [N/mm2]	gam [kN/m]
1	2329.35	364.88	17833246.	0.0	182609	76.96
	6270.0	668.24	17436762.	912.9	70234	

Design forces and moments
(C/E = characteristic plastic/elastic, D=plast.Design, F=elast. Design)

	N[kN]	Vy[kN]	Vz[kN]	Mt[kNm]	My[kNm]	Mz[kNm]	y[mm]	z[mm]	BUCK
C	81767.3	63003.52	55017.96	102578.1	76797.60	102342.4	27.9	-123.	c c
C	-82274.6				137707.0	0.00	0.0	930.0	COMB
C	-37773.5				0.00	102564.4	0.0	0.0	COMB
C	-149344.	63003.52	55017.95	102578.1	-76302.2	-102071.	-27.9	737.0	
C	6727.7				-76951.8	0.00	0.0	930.0	COMB
C	-37773.5				0.00	-102564.	0.0	0.0	COMB
E	79318.4	8648.32	13701.77	2127.23	51179.24	26184.47	0.0	930.0	
E	-79318.4	8648.32	13701.77	2127.23	-51179.2	-26184.5	0.0	930.0	
D	71102.0	47438.87	41450.56	68576.57	65518.81	77137.27	20.1	-69.0	
D	-58185.3				105379.8	0.00	0.0	930.0	COMB
D	-25182.3				0.00	77260.01	0.0	0.0	COMB
D	-116153.	47438.87	41450.56	68576.58	-63866.9	-77007.3	-20.1	671.9	
D	7820.7				-64876.3	0.00	0.0	930.0	COMB
D	-25182.3				0.00	-77260.0	0.0	0.0	COMB
F	68972.5	7520.28	11914.58	1418.15	44503.69	22769.11	0.0	930.0	
F	-68972.5	7520.28	11914.58	1418.15	-44503.7	-22769.1	0.0	930.0	

Additional Design Data

M	periphery-O/-I [m2/m]	[m2/m]	deff [mm]	t-min [mm]	t-max [mm]	SMP [o/o]	thet-p [tm2/m]	thet-y [tm2/m]	thet-z [tm2/m]	thet-yz [tm2/m]
	52.354		9.0	3.1	300.0	0.0	27.736	5.082	22.653	
1	7.299		48.9	45.0	52.0	0.0	0.905	0.874	0.031	
25	0.551		1174.0			0.0	0.005	0.005		
**	0.004		32.0			0.0	0.000		0.000	
31	16.530		265.5	50.0	300.0	0.0	22.626	0.004	22.622	
**	27.969		3.1	3.1	3.1	0.0	0.000	0.000	0.000	

Cross section No. 179.1 = CS 1 - steel alone

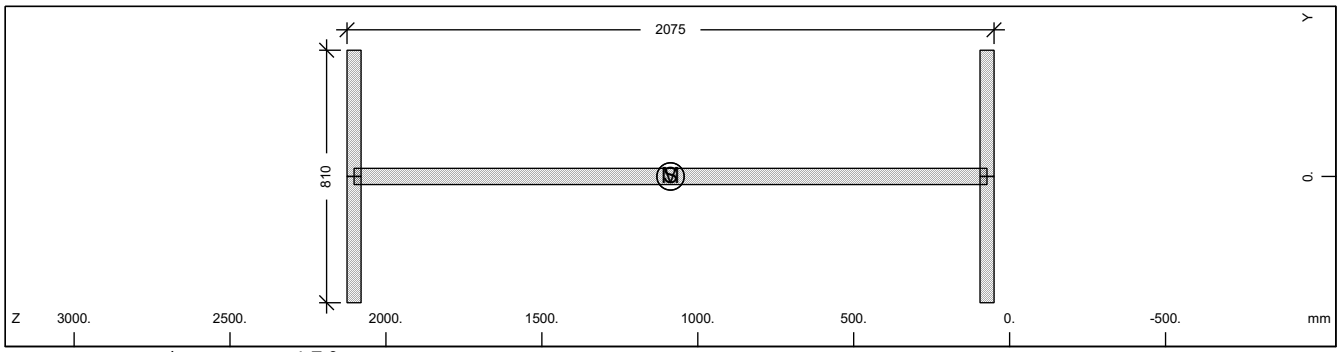

Cross section No. 179

Static properties of cross section

Mat NoR	A[cm2] It[cm4]	Ay/Az/Ayz [cm2]	Iy/Iz/Iyz [cm4]	ys/zs [mm]	modules [N/mm2]	gam [kN/m]
1	1784.47	607.50	11132163.	0.0	210000	14.01
	6270.0	999.35	398580.9	1087.4	80769	

Additional static properties of cross section

Alfa-T [1/°K]	ymin ymax [mm]	zmin zmax [mm]	hymin hzmin [mm]	AK AB [cm2]	MB	Tau-T Tau-B [1/m3]	Tau-Vy Tau-Vz [1/m2]
1.2E-05	-405.0	-1037.4		1.068E+03		3.603E+02	2.058E+01
	405.0	1037.4				1.255E+02	1.102E+01

SOFiSTiK AG - www.sofistik.de

Composite bridge 38+50+38, b=14.25m, 2x2HL1100R HISTAR460 , slab 0.30m C30/37

Section values for warping

Wmin[cm2]	Wmax[cm2]	CM[cm6]	CMS[cm4]	ASwyy[cm6]	ASwzz[cm6]	ry[mm]	rz[mm]
-4110.24	4110.244	105265734.	6257072.1	7.27	202.99	0.0	0.0

Design values of cross section

Mat NoR	A[cm2] It[cm4]	Ay/Az/Ayz [cm2]	Iy/Iz/Iyz [cm4]	ys/zs [mm]	modules [N/mm2]	gam [kN/m]
1	1784.47	607.50	11132163.	0.0	182609	14.01
	6270.0	999.35	398580.9	1087.4	70234	

Design forces and moments
(C/E = characteristic plastic/elastic, D=plast.Design, F=elast. Design)

	N[kN]	Vy[kN]	Vz[kN]	Mt[kNm]	My[kNm]	Mz[kNm]	y[mm]	z[mm]	BUCK
C	59779.7	14099.76	20414.09	848.01	42726.86	5405.01	0.0	1087.	c c
C	0.0				0.00	0.00	0.0	0.0	COMB
E	59779.7	9399.84	17556.62	536.87	35949.15	3296.90	0.0	1087.	
D	51982.4	12260.66	17751.38	737.40	37153.79	4700.01	0.0	1087.	
D	0.0				0.00	0.00	0.0	0.0	COMB
F	51982.4	8173.78	15266.63	466.84	31260.13	2866.87	0.0	1087.	

Additional Design Data

M	periphery-O/-I [m2/m]	[m2/m]	deff [mm]	t-min [mm]	t-max [mm]	SMP [o/o]	thet-p [tm2/m]	thet-y [tm2/m]	thet-z [tm2/m]	thet-yz [tm2/m]
	7.299		48.9	45.0	52.0	0.0	0.905	0.874	0.031	

Cross section No. 179.2 = CS 10 - prefab. slab C1

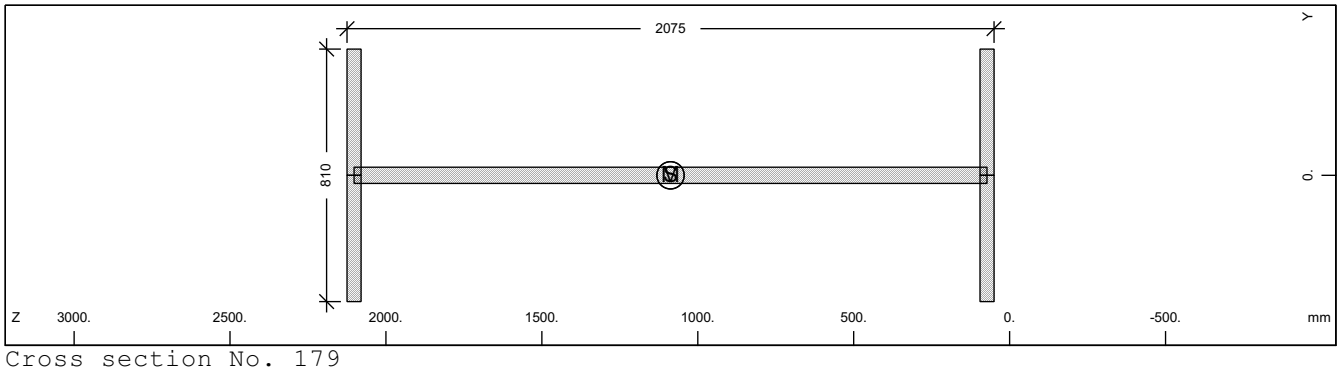

Cross section No. 179

Static properties of cross section

Mat NoR	A[cm2] It[cm4]	Ay/Az/Ayz [cm2]	Iy/Iz/Iyz [cm4]	ys/zs [mm]	modules [N/mm2]	gam [kN/m]
1	1784.47	607.50	11132163.	0.0	210000	14.01
	6270.0	999.35	398580.9	1087.4	80769	

Additional static properties of cross section

Alfa-T [1/°K]	ymin ymax [mm]	zmin zmax [mm]	hymin hzmin [mm]	AK AB [cm2]	MB	Tau-T Tau-B [1/m3]	Tau-Vy Tau-Vz [1/m2]
1.2E-05	-405.0	-1037.4		1.068E+03		3.603E+02	2.058E+01
	405.0	1037.4				1.255E+02	1.102E+01

Section values for warping

Wmin[cm2]	Wmax[cm2]	CM[cm6]	CMS[cm4]	ASwyy[cm6]	ASwzz[cm6]	ry[mm]	rz[mm]
-4110.24	4110.244	105265734.	6257072.1	7.27	202.99	0.0	0.0

Design values of cross section

Mat NoR	A[cm2] It[cm4]	Ay/Az/Ayz [cm2]	Iy/Iz/Iyz [cm4]	ys/zs [mm]	modules [N/mm2]	gam [kN/m]
1	1784.47	607.50	11132163.	0.0	182609	14.01
	6270.0	999.35	398580.9	1087.4	70234	

SOFiSTiK AG - www.sofistik.de

Composite bridge 38+50+38, b=14.25m, 2x2HL1100R HISTAR460 , slab 0.30m C30/37

Design forces and moments
(C/E = characteristic plastic/elastic, D=plast.Design, F=elast. Design)

	N[kN]	Vy[kN]	Vz[kN]	Mt[kNm]	My[kNm]	Mz[kNm]	y[mm]	z[mm]	BUCK
C	59779.7	14099.76	20414.09	848.01	42726.86	5405.01	0.0	1087.	c c
C	0.0				0.00	0.00	0.0	0.0	COMB
E	59779.7	9399.84	17556.62	536.87	35949.15	3296.90	0.0	1087.	
D	51982.4	12260.66	17751.38	737.40	37153.79	4700.01	0.0	1087.	
D	0.0				0.00	0.00	0.0	0.0	COMB
F	51982.4	8173.78	15266.63	466.84	31260.13	2866.87	0.0	1087.	

Additional Design Data

M	periphery-O/-I [m2/m]	[m2/m]	deff [mm]	t-min [mm]	t-max [mm]	SMP [o/o]	thet-p [tm2/m]	thet-y [tm2/m]	thet-z [tm2/m]	thet-yz [tm2/m]
	7.299		48.9	45.0	52.0	0.0	0.905	0.874	0.031	

Cross section No. 179.3 = CS 20 - in-situ conc:C2

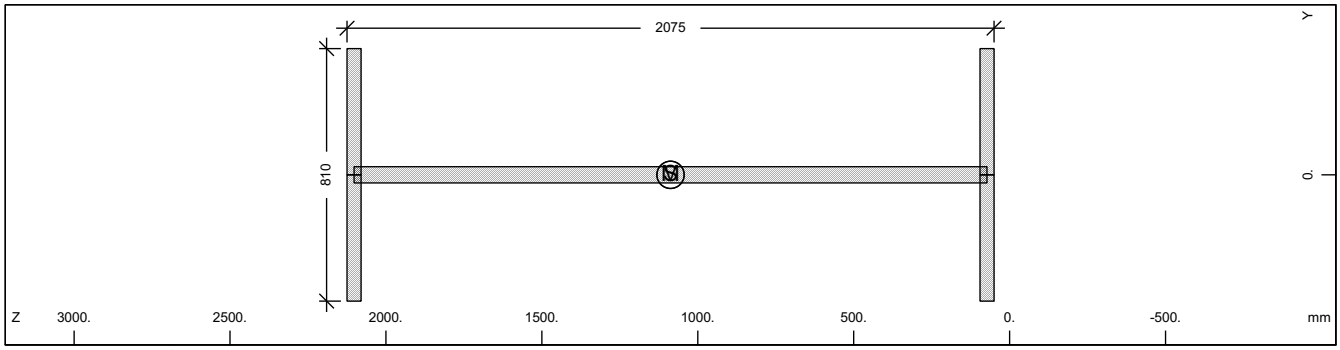

Cross section No. 179

Static properties of cross section

Mat NoR	A[cm2] It[cm4]	Ay/Az/Ayz [cm2]	Iy/Iz/Iyz [cm4]	ys/zs [mm]	modules [N/mm2]	gam [kN/m]
1	1784.47	607.50	11132163.	0.0	210000	14.01
	6270.0	999.35	398580.9	1087.4	80769	

Additional static properties of cross section

Alfa-T [1/°K]	ymin ymax [mm]	zmin zmax [mm]	hymin hzmin [mm]	AK AB [cm2]	MB	Tau-T Tau-B [1/m3]	Tau-Vy Tau-Vz [1/m2]
1.2E-05	-405.0	-1037.4		1.068E+03		3.603E+02	2.058E+01
	405.0	1037.4				1.255E+02	1.102E+01

Section values for warping

Wmin[cm2]	Wmax[cm2]	CM[cm6]	CMS[cm4]	ASwyy[cm6]	ASwzz[cm6]	ry[mm]	rz[mm]
-4110.24	4110.244105265734.		6257072.1	7.27	202.99	0.0	0.0

Design values of cross section

Mat NoR	A[cm2] It[cm4]	Ay/Az/Ayz [cm2]	Iy/Iz/Iyz [cm4]	ys/zs [mm]	modules [N/mm2]	gam [kN/m]
1	1784.47	607.50	11132163.	0.0	182609	14.01
	6270.0	999.35	398580.9	1087.4	70234	

Design forces and moments
(C/E = characteristic plastic/elastic, D=plast.Design, F=elast. Design)

	N[kN]	Vy[kN]	Vz[kN]	Mt[kNm]	My[kNm]	Mz[kNm]	y[mm]	z[mm]	BUCK
C	59779.7	14099.76	20414.09	848.01	42726.86	5405.01	0.0	1087.	c c
C	0.0				0.00	0.00	0.0	0.0	COMB
E	59779.7	9399.84	17556.62	536.87	35949.15	3296.90	0.0	1087.	
D	51982.4	12260.66	17751.38	737.40	37153.79	4700.01	0.0	1087.	
D	0.0				0.00	0.00	0.0	0.0	COMB
F	51982.4	8173.78	15266.63	466.84	31260.13	2866.87	0.0	1087.	

SOFiSTiK AG - www.sofistik.de

Composite bridge 38+50+38, b=14.25m, 2x2HL1100R HISTAR460 , slab 0.30m C30/37

Additional Design Data

M	periphery-O/-I [m2/m]	[m2/m]	deff [mm]	t-min [mm]	t-max [mm]	SMP [o/o]	thet-p [tm2/m]	thet-y [tm2/m]	thet-z [tm2/m]	thet-yz [tm2/m]
	7.299		48.9	45.0	52.0	0.0	0.905	0.874	0.031	

Cross section No. 179.4 = CS 21 - reinf active:C2

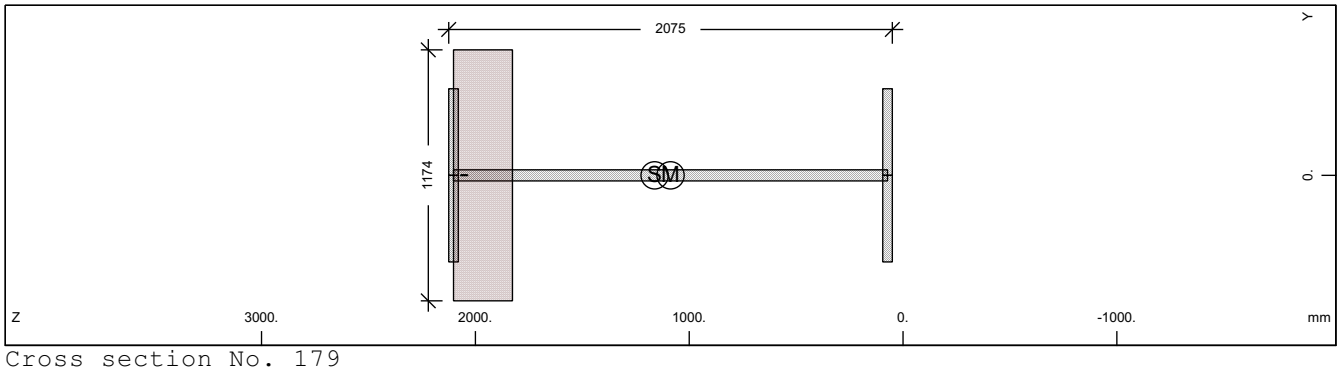

Cross section No. 179

Static properties of cross section

Mat NoR	A[cm2] It[cm4]	Ay/Az/Ayz [cm2]	Iy/Iz/Iyz [cm4]	ys/zs [mm]	modules [N/mm2]	gam [kN/m]
1	1949.52	607.50	12305445.	0.0	210000	22.10
	6270.0	979.81	398580.9	1161.6	80769	

Additional static properties of cross section

Alfa-T [1/°K]	ymin ymax [mm]	zmin zmax [mm]	hymin hzmin [mm]	AK AB [cm2]	MB	Tau-T Tau-B [1/m3]	Tau-Vy Tau-Vz [1/m2]
1.2E-05	-587.0	-1111.6		2.196E+03		7.757E+00	2.058E+01
	587.0	963.1		3.237E+03		1.255E+02	1.102E+01

Section values for warping

Wmin[cm2]	Wmax[cm2]	CM[cm6]	CMS[cm4]	ASwyy[cm6]	ASwzz[cm6]	ry[mm]	rz[mm]
-4110.24	4110.24	4105265734.	6257072.1	1.21	37.40	0.0	15.5

Partial cross sections

Mat NoR	A[cm2] It[cm4]	Ay/Az/Ayz [cm2]	Iy/Iz/Iyz [cm4]	ys/zs [mm]	modules [N/mm2]	gam [kN/m]
1	1784.47	607.50	11132163.	0.0	210000	14.01
	14434.1	978.37	398580.9	1087.4	80769	
25	3237.30		205130.8	0.0	10667	8.09
	14872970.	26.19	0.0	1964.4	4444	
210	0.64	0.00	0.0	0.0	200000	0.00
	2.2	0.00	0.0	2052.2	76923	

Design values of cross section

Mat NoR	A[cm2] It[cm4]	Ay/Az/Ayz [cm2]	Iy/Iz/Iyz [cm4]	ys/zs [mm]	modules [N/mm2]	gam [kN/m]
1	1911.15	607.50	12050820.	0.0	182609	22.10
	6270.0	979.48	398580.9	1145.5	70234	

Design forces and moments
(C/E = characteristic plastic/elastic, D=plast.Design, F=elast. Design)

	N[kN]	Vy[kN]	Vz[kN]	Mt[kNm]	My[kNm]	Mz[kNm]	y[mm]	z[mm]	BUCK
C	59811.9	14118.33	26217.51	3991.18	42757.87	6855.22	3.4	1088.	c c
C	-2555.6				42851.59	0.00	0.0	1162.	COMB
C	-4855.9				0.00	6830.49	0.0	0.0	COMB
C	-69523.8	14118.33	26217.51	3991.18	-49912.6	-6822.25	-3.4	1367.	
C	-7156.3				-50647.6	0.00	0.0	1162.	COMB
C	-4855.9				0.00	-6830.49	0.0	0.0	COMB
E	65308.8	9399.84	17544.36	2127.20	37082.95	3296.90	0.0	1162.	
E	-65308.8	9399.84	17544.36	2127.20	-37082.9	-3296.90	0.0	1162.	
D	52010.3	12276.81	21714.04	2834.41	37180.75	5661.70	2.4	1088.	

SOFiSTiK AG - www.sofistik.de

Composite bridge 38+50+38, b=14.25m, 2x2HL1100R HISTAR460 , slab 0.30m C30/37

Design forces and moments
(C/E = characteristic plastic/elastic, D=plast.Design, F=elast. Design)

	N[kN]	Vy[kN]	Vz[kN]	Mt[kNm]	My[kNm]	Mz[kNm]	y[mm]	z[mm]	BUCK
D	-2222.2				37262.25	0.00	0.0	1162.	COMB
D	-3237.3				0.00	5650.38	0.0	0.0	COMB
D	-58484.9	12276.81	21714.04	2834.41	-42161.1	-5646.19	-2.4	1302.	
D	-4252.4				-42459.6	0.00	0.0	1162.	COMB
D	-3237.3				0.00	-5650.38	0.0	0.0	COMB
F	56790.3	8173.78	15255.96	1418.13	32246.04	2866.87	0.0	1162.	
F	-56790.3	8173.78	15255.96	1418.13	-32246.0	-2866.87	0.0	1162.	

Additional Design Data

M	periphery-O/-I [m2/m]	[m2/m]	deff [mm]	t-min [mm]	t-max [mm]	SMP [o/o]	thet-p [tm2/m]	thet-y [tm2/m]	thet-z [tm2/m]	thet-yz [tm2/m]
	7.855		49.6	32.0	275.7	0.0	1.305	1.274	0.031	
1	7.299		48.9	45.0	52.0	0.0	0.905	0.874	0.031	
25	0.551		1174.0			0.0	0.005	0.005		
**	0.004		32.0			0.0	0.000		0.000	

Cross section No. 179.5 = CS 30 - in-situ conc:C3

Cross section No. 180 - VFT (153)

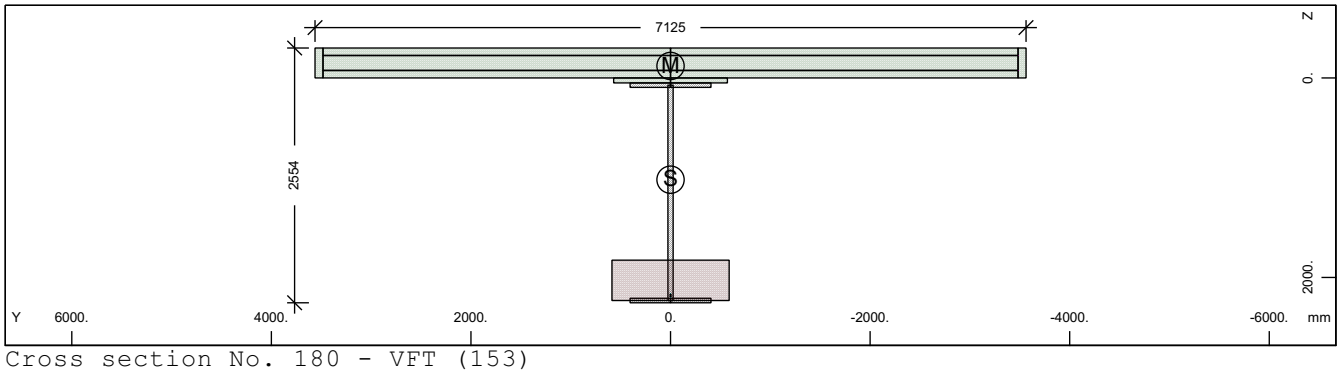

Cross section No. 180 - VFT (153)

Static properties of cross section

Mat NoR	A[cm2] It[cm4]	Ay/Az/Ayz [cm2]	Iy/Iz/Iyz [cm4]	ys/zs [mm]	y/z-sc [mm]	modules [N/mm2]	gam [kN/m]
1	2510.23	363.69	21401115.	0.0	0.0	210000	81.28
	6270.0	729.71	17244081.	1020.4	-119.9	80769	

Additional static properties of cross section

Alfa-T [1/°K]	ymin ymax [mm]	zmin zmax [mm]	hymin hzmin [mm]	AK AB [cm2]	MB	Tau-T Tau-B [1/m3]	Tau-Vy Tau-Vz [1/m2]
1.2E-05	-3562.5	-1320.4		3.208E+03		5.310E+00	3.350E+01
	3562.5	1233.4		2.670E+04		1.255E+02	1.930E+01

Section values for warping

Wmin[cm2]	Wmax[cm2]	CM[cm6]	CMS[cm4]	ASwyy[cm6]	ASwzz[cm6]	ry[mm]	rz[mm]
-9522.53	9522.53	1.219E+10	2450388.9	242.17	300.55	0.0	1405.6

Partial cross sections

Mat NoR	A[cm2] It[cm4]	Ay/Az/Ayz [cm2]	Iy/Iz/Iyz [cm4]	ys/zs [mm]	modules [N/mm2]	gam [kN/m]
1	1851.59	0.12	12853833.	0.0	210000	14.54
	15039.1	456.32	398580.9	1151.9	80769	
25	4752.77		649116.3	0.0	10667	11.88
	21835423.	23.64	0.0	2028.9	4444	
210	0.64	0.00	0.0	0.0	200000	0.00
	2.2	0.00	0.0	2181.3	76923	
31	21945.00	17398.94	170028.4	0.0	0	54.86
	6417251.4	12277.41	904880243.	-145.5	0	

SOFiSTiK AG - www.sofistik.de

Composite bridge 38+50+38, b=14.25m, 2x2HL1100R HISTAR460 , slab 0.30m C30/37

300	437.45	381.75	24606.4	0.0	200000	0.00
	14.4	285.16	17687771.	-150.0	76923	

Design values of cross section

Mat NoR	A[cm2] It[cm4]	Ay/Az/Ayz [cm2]	Iy/Iz/Iyz [cm4]	ys/zs [mm]	modules [N/mm2]	gam [kN/m]
1	2453.90	363.69	20807383.	0.0	182609	81.28
	6270.0	728.90	17244080.	997.3	70234	

Design forces and moments
(C/E = characteristic plastic/elastic, D=plast.Design, F=elast. Design)

	N[kN]	Vy[kN]	Vz[kN]	Mt[kNm]	My[kNm]	Mz[kNm]	y[mm]	z[mm]	BUCK
C	83932.9	62955.55	58816.76	104079.6	83235.23	102834.0	27.0	-74.6	c c
C	-83094.3				149352.8	0.00	0.0	1020.	COMB
C	-40046.7				0.00	102970.9	0.0	0.0	COMB
C	-154468.	62955.55	58816.75	104079.6	-86846.4	-102449.	-27.0	934.4	
C	3001.0				-86975.6	0.00	0.0	1020.	COMB
C	-40046.7				0.00	-102971.	0.0	0.0	COMB
E	84092.8	8617.85	14954.75	3107.31	58126.90	25993.48	0.0	1020.	
E	-84092.8	8617.85	14954.75	3107.31	-58126.9	-25993.5	0.0	1020.	
D	72985.1	47397.16	44246.51	69584.40	71244.57	77401.21	20.0	-54.8	
D	-58898.1				114298.2	0.00	0.0	1020.	COMB
D	-26697.8				0.00	77478.13	0.0	0.0	COMB
D	-120009.	47397.16	44246.51	69584.38	-72213.8	-77210.7	-20.0	838.9	
D	5502.6				-72713.5	0.00	0.0	1020.	COMB
D	-26697.8				0.00	-77478.1	0.0	0.0	COMB
F	73124.2	7493.78	13004.13	2071.54	50545.13	22603.03	0.0	1020.	
F	-73124.2	7493.78	13004.13	2071.54	-50545.1	-22603.0	0.0	1020.	

Additional Design Data

M	periphery-O/-I [m2/m]	[m2/m]	deff [mm]	t-min [mm]	t-max [mm]	SMP [o/o]	thet-p [tm2/m]	thet-y [tm2/m]	thet-z [tm2/m]	thet-yz [tm2/m]
	52.764		9.5	3.1	404.8	0.0	29.289	6.636	22.653	
1	7.558		49.0	45.0	52.0	0.0	1.040	1.009	0.031	
25	0.810		1174.0			0.0	0.016	0.016		
**	0.004		32.0			0.0	0.000		0.000	
31	16.530		265.5	50.0	300.0	0.0	22.626	0.004	22.622	
**	27.863		3.1	3.1	3.1	0.0	0.000	0.000	0.000	

Cross section No. 180.1 = CS 1 - steel alone

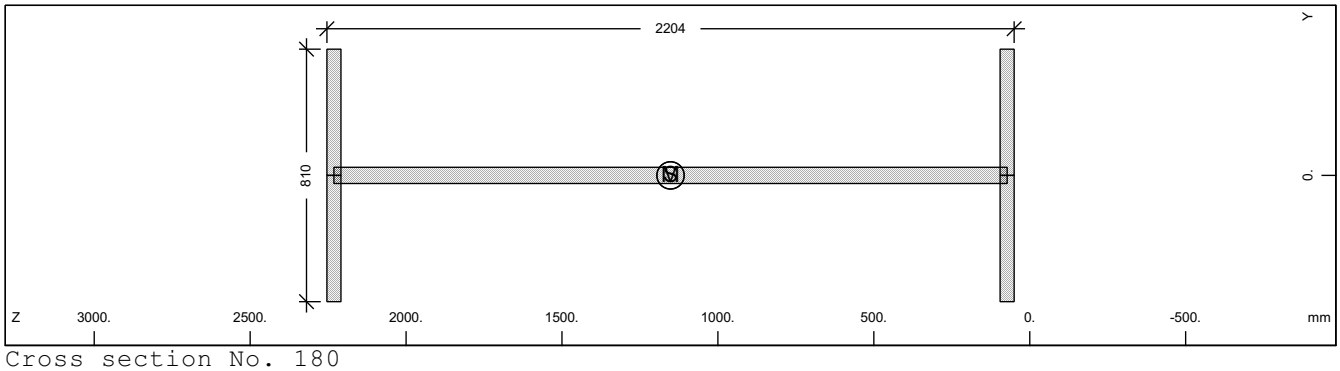

Cross section No. 180

Static properties of cross section

Mat NoR	A[cm2] It[cm4]	Ay/Az/Ayz [cm2]	Iy/Iz/Iyz [cm4]	ys/zs [mm]	modules [N/mm2]	gam [kN/m]
1	1851.59	607.50	12853833.	0.0	210000	14.54
	6270.0	1064.51	398580.9	1151.9	80769	

SOFiSTiK AG - www.sofistik.de

Composite bridge 38+50+38, b=14.25m, 2x2HL1100R HISTAR460 , slab 0.30m C30/37

Additional static properties of cross section

Alfa-T	ymin ymax	zmin zmax	hymin hzmin	AK AB	MB	Tau-T Tau-B	Tau-Vy Tau-Vz
[1/°K]	[mm]	[mm]	[mm]	[cm2]		[1/m3]	[1/m2]
1.2E-05	-405.0	-1101.9		1.112E+03		3.458E+02	2.058E+01
	405.0	1101.9				1.255E+02	1.042E+01

Section values for warping

Wmin[cm2]	Wmax[cm2]	CM[cm6]	CMS[cm4]	ASwyy[cm6]	ASwzz[cm6]	ry[mm]	rz[mm]
-4371.64	4371.644	644035380.	7078242.3	1.19	38.27	0.0	0.0

Design values of cross section

Mat NoR	A[cm2] It[cm4]	Ay/Az/Ayz [cm2]	Iy/Iz/Iyz [cm4]	ys/zs [mm]	modules [N/mm2]	gam [kN/m]
1	1851.59	607.50	12853833.	0.0	182609	14.54
	6270.0	1064.51	398580.9	1151.9	70234	

Design forces and moments
(C/E = characteristic plastic/elastic, D=plast.Design, F=elast. Design)

	N[kN]	Vy[kN]	Vz[kN]	Mt[kNm]	My[kNm]	Mz[kNm]	y[mm]	z[mm]	BUCK
C	62028.4	14099.76	21712.36	881.77	46657.79	5434.25	0.0	1152.	c c
C	0.0				0.00	0.00	0.0	0.0	COMB
E	62028.4	9399.84	18563.97	559.37	39077.64	3296.90	0.0	1152.	
D	53937.8	12260.66	18880.32	766.75	40571.99	4725.43	0.0	1152.	
D	0.0				0.00	0.00	0.0	0.0	COMB
F	53937.8	8173.78	16142.58	486.41	33980.55	2866.87	0.0	1152.	

Additional Design Data

M	periphery-O/-I [m2/m]	[m2/m]	deff [mm]	t-min [mm]	t-max [mm]	SMP [o/o]	thet-p [tm2/m]	thet-y [tm2/m]	thet-z [tm2/m]	thet-yz [tm2/m]
	7.558		49.0	45.0	52.0	0.0	1.040	1.009	0.031	

Cross section No. 180.2 = CS 10 - prefab. slab C1

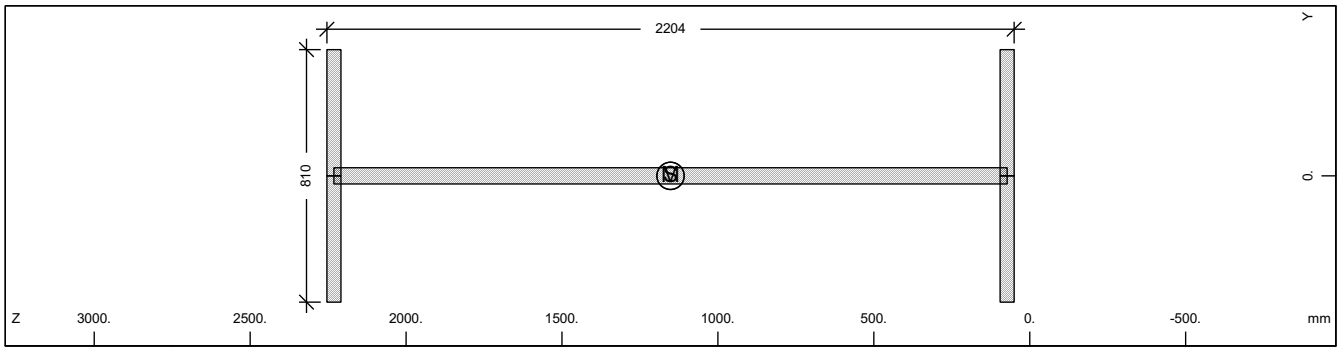

Cross section No. 180

Static properties of cross section

Mat NoR	A[cm2] It[cm4]	Ay/Az/Ayz [cm2]	Iy/Iz/Iyz [cm4]	ys/zs [mm]	modules [N/mm2]	gam [kN/m]
1	1851.59	607.50	12853833.	0.0	210000	14.54
	6270.0	1064.51	398580.9	1151.9	80769	

Additional static properties of cross section

Alfa-T	ymin ymax	zmin zmax	hymin hzmin	AK AB	MB	Tau-T Tau-B	Tau-Vy Tau-Vz
[1/°K]	[mm]	[mm]	[mm]	[cm2]		[1/m3]	[1/m2]
1.2E-05	-405.0	-1101.9		1.112E+03		3.458E+02	2.058E+01
	405.0	1101.9				1.255E+02	1.042E+01

Section values for warping

Wmin[cm2]	Wmax[cm2]	CM[cm6]	CMS[cm4]	ASwyy[cm6]	ASwzz[cm6]	ry[mm]	rz[mm]
-4371.64	4371.644	644035380.	7078242.3	1.19	38.27	0.0	0.0

SOFiSTiK AG - www.sofistik.de

Composite bridge 38+50+38, b=14.25m, 2x2HL1100R HISTAR460 , slab 0.30m C30/37

Design values of cross section

Mat NoR	A[cm2] It[cm4]	Ay/Az/Ayz [cm2]	Iy/Iz/Iyz [cm4]	ys/zs [mm]	modules [N/mm2]	gam [kN/m]
1	1851.59	607.50	12853833.	0.0	182609	14.54
	6270.0	1064.51	398580.9	1151.9	70234	

Design forces and moments
(C/E = characteristic plastic/elastic, D=plast.Design, F=elast. Design)

	N[kN]	Vy[kN]	Vz[kN]	Mt[kNm]	My[kNm]	Mz[kNm]	y[mm]	z[mm]	BUCK
C	62028.4	14099.76	21712.36	881.77	46657.79	5434.25	0.0	1152.	c c
C	0.0				0.00	0.00	0.0	0.0	COMB
E	62028.4	9399.84	18563.97	559.37	39077.64	3296.90	0.0	1152.	
D	53937.8	12260.66	18880.32	766.75	40571.99	4725.43	0.0	1152.	
D	0.0				0.00	0.00	0.0	0.0	COMB
F	53937.8	8173.78	16142.58	486.41	33980.55	2866.87	0.0	1152.	

Additional Design Data

M	periphery-O/-I [m2/m] [m2/m]	deff [mm]	t-min [mm]	t-max [mm]	SMP [o/o]	thet-p [tm2/m]	thet-y [tm2/m]	thet-z [tm2/m]	thet-yz [tm2/m]
	7.558	49.0	45.0	52.0	0.0	1.040	1.009	0.031	

Cross section No. 180.3 = CS 20 - in-situ conc:C2

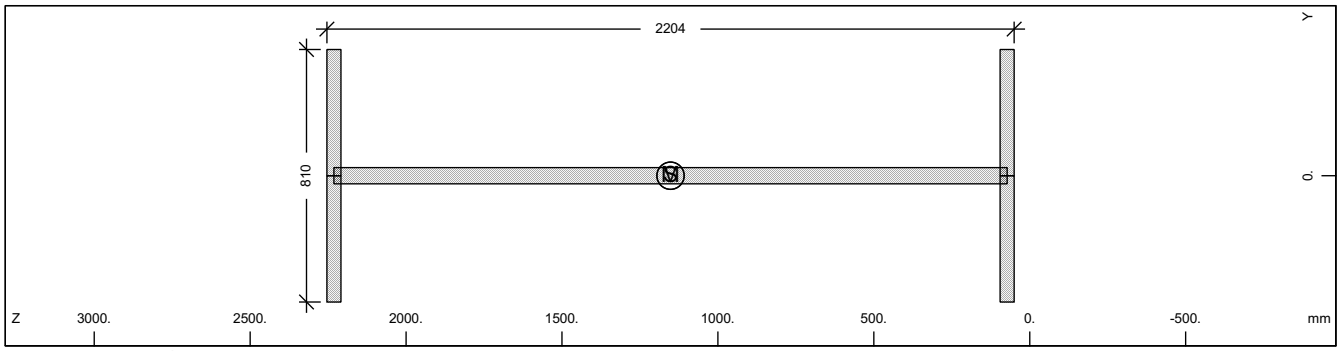

Cross section No. 180

Static properties of cross section

Mat NoR	A[cm2] It[cm4]	Ay/Az/Ayz [cm2]	Iy/Iz/Iyz [cm4]	ys/zs [mm]	modules [N/mm2]	gam [kN/m]
1	1851.59	607.50	12853833.	0.0	210000	14.54
	6270.0	1064.51	398580.9	1151.9	80769	

Additional static properties of cross section

Alfa-T [1/°K]	ymin ymax [mm]	zmin zmax [mm]	hymin hzmin [mm]	AK AB [cm2]	MB	Tau-T Tau-B [1/m3]	Tau-Vy Tau-Vz [1/m2]
1.2E-05	-405.0	-1101.9		1.112E+03		3.458E+02	2.058E+01
	405.0	1101.9				1.255E+02	1.042E+01

Section values for warping

Wmin[cm2]	Wmax[cm2]	CM[cm6]	CMS[cm4]	ASwyy[cm6]	ASwzz[cm6]	ry[mm]	rz[mm]
-4371.64	4371.644644035380.		7078242.3	1.19	38.27	0.0	0.0

Design values of cross section

Mat NoR	A[cm2] It[cm4]	Ay/Az/Ayz [cm2]	Iy/Iz/Iyz [cm4]	ys/zs [mm]	modules [N/mm2]	gam [kN/m]
1	1851.59	607.50	12853833.	0.0	182609	14.54
	6270.0	1064.51	398580.9	1151.9	70234	

Design forces and moments
(C/E = characteristic plastic/elastic, D=plast.Design, F=elast. Design)

	N[kN]	Vy[kN]	Vz[kN]	Mt[kNm]	My[kNm]	Mz[kNm]	y[mm]	z[mm]	BUCK
C	62028.4	14099.76	21712.36	881.77	46657.79	5434.25	0.0	1152.	c c
C	0.0				0.00	0.00	0.0	0.0	COMB
E	62028.4	9399.84	18563.97	559.37	39077.64	3296.90	0.0	1152.	

SOFiSTiK AG - www.sofistik.de

Composite bridge 38+50+38, b=14.25m, 2x2HL1100R HISTAR460 , slab 0.30m C30/37

Design forces and moments
(C/E = characteristic plastic/elastic, D=plast.Design, F=elast. Design)

	N[kN]	Vy[kN]	Vz[kN]	Mt[kNm]	My[kNm]	Mz[kNm]	y[mm]	z[mm]	BUCK
D	53937.8	12260.66	18880.32	766.75	40571.99	4725.43	0.0	1152.	
D	0.0				0.00	0.00	0.0	0.0	COMB
F	53937.8	8173.78	16142.58	486.41	33980.55	2866.87	0.0	1152.	

Additional Design Data

M	periphery-O/-I [m2/m]	[m2/m]	deff [mm]	t-min [mm]	t-max [mm]	SMP [o/o]	thet-p [tm2/m]	thet-y [tm2/m]	thet-z [tm2/m]	thet-yz [tm2/m]
	7.558		49.0	45.0	52.0	0.0	1.040	1.009	0.031	

Cross section No. 180.4 = CS 21 - reinf active:C2

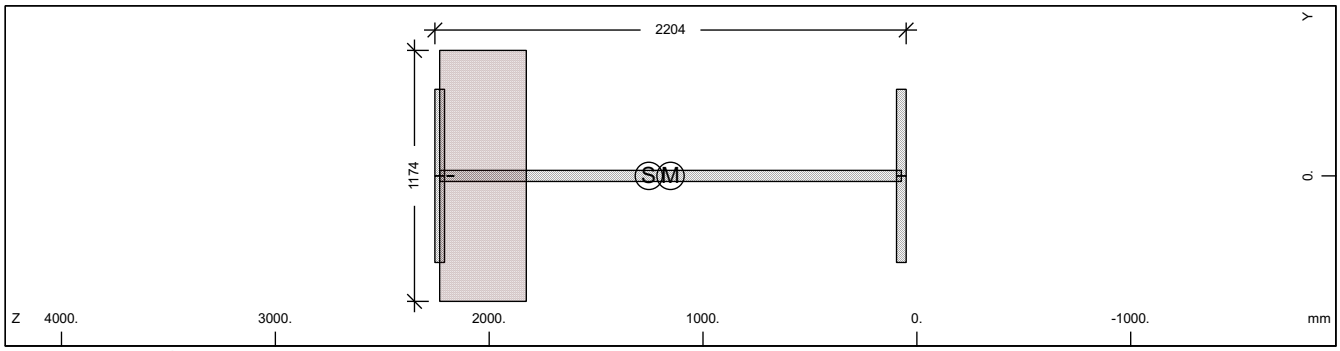

Cross section No. 180

Static properties of cross section

Mat NoR	A[cm2] It[cm4]	Ay/Az/Ayz [cm2]	Iy/Iz/Iyz [cm4]	ys/zs [mm]	modules [N/mm2]	gam [kN/m]
1	2093.62	607.50	14534676.	0.0	210000	26.42
	6270.0	1023.42	398580.9	1253.3	80769	

Additional static properties of cross section

Alfa-T [1/°K]	ymin ymax [mm]	zmin zmax [mm]	hymin hzmin [mm]	AK AB [cm2]	MB	Tau-T Tau-B [1/m3]	Tau-Vy Tau-Vz [1/m2]
1.2E-05	-587.0	-1203.3		3.208E+03		5.310E+00	2.058E+01
	587.0	1000.5		4.753E+03		1.255E+02	1.049E+01

Section values for warping

Wmin[cm2]	Wmax[cm2]	CM[cm6]	CMS[cm4]	ASwyy[cm6]	ASwzz[cm6]	ry[mm]	rz[mm]
-4371.64	4371.644644035380.		7078242.3	3.34	121.89	0.0	12.8

Partial cross sections

Mat NoR	A[cm2] It[cm4]	Ay/Az/Ayz [cm2]	Iy/Iz/Iyz [cm4]	ys/zs [mm]	modules [N/mm2]	gam [kN/m]
1	1851.59	607.50	12853833.	0.0	210000	14.54
	15039.1	1020.24	398580.9	1151.9	80769	
25	4752.77		649116.3	0.0	10667	11.88
	21835423.	57.82	0.0	2028.9	4444	
210	0.64	0.00	0.0	0.0	200000	0.00
	2.2	0.00	0.0	2181.3	76923	

Design values of cross section

Mat NoR	A[cm2] It[cm4]	Ay/Az/Ayz [cm2]	Iy/Iz/Iyz [cm4]	ys/zs [mm]	modules [N/mm2]	gam [kN/m]
1	2037.29	607.50	14178786.	0.0	182609	26.42
	6270.0	1022.68	398580.9	1231.9	70234	

Design forces and moments
(C/E = characteristic plastic/elastic, D=plast.Design, F=elast. Design)

	N[kN]	Vy[kN]	Vz[kN]	Mt[kNm]	My[kNm]	Mz[kNm]	y[mm]	z[mm]	BUCK
C	62060.6	14118.33	30016.31	5492.75	46690.87	7577.04	4.7	1153.	c c
C	-3501.5				46866.83	0.00	0.0	1253.	COMB

SOFiSTiK AG - www.sofistik.de

Composite bridge 38+50+38, b=14.25m, 2x2HL1100R HISTAR460 , slab 0.30m C30/37

Design forces and moments
(C/E = characteristic plastic/elastic, D=plast.Design, F=elast. Design)

	N[kN]	Vy[kN]	Vz[kN]	Mt[kNm]	My[kNm]	Mz[kNm]	y[mm]	z[mm]	BUCK
C	-7129.2				0.00	7526.91	0.0	0.0	COMB
C	-76318.9	14118.33	30016.31	5492.75	-49229.8	-7510.20	-4.7	1531.	
C	-10756.8				-57925.2	0.00	0.0	1253.	COMB
C	-7129.2				0.00	-7526.91	0.0	0.0	COMB
E	70136.2	9399.84	18434.95	3107.28	40463.20	3296.90	0.0	1253.	
E	-70136.2	9399.84	18434.95	3107.28	-40463.2	-3296.90	0.0	1253.	
D	53965.7	12276.81	24510.00	3842.30	40600.76	6146.26	3.6	1153.	
D	-3044.8				40753.77	0.00	0.0	1253.	COMB
D	-4752.8				0.00	6120.59	0.0	0.0	COMB
D	-63471.2	12276.81	24510.00	3842.30	-42043.9	-6112.04	-3.6	1461.	
D	-6460.7				-48126.0	0.00	0.0	1253.	COMB
D	-4752.8				0.00	-6120.59	0.0	0.0	COMB
F	60988.0	8173.78	16030.39	2071.52	35185.39	2866.87	0.0	1253.	
F	-60988.0	8173.78	16030.39	2071.52	-35185.4	-2866.87	0.0	1253.	

Additional Design Data

M	periphery-O/-I [m2/m]	[m2/m]	deff [mm]	t-min [mm]	t-max [mm]	SMP [o/o]	thet-p [tm2/m]	thet-y [tm2/m]	thet-z [tm2/m]	thet-yz [tm2/m]
	8.371		50.0	32.0	404.8	0.0	1.559	1.528	0.031	
1	7.558		49.0	45.0	52.0	0.0	1.040	1.009	0.031	
25	0.810		1174.0			0.0	0.016	0.016		
**	0.004		32.0			0.0	0.000		0.000	

Cross section No. 180.5 = CS 30 - in-situ conc:C3

Cross section No. 181 - VFT (153)

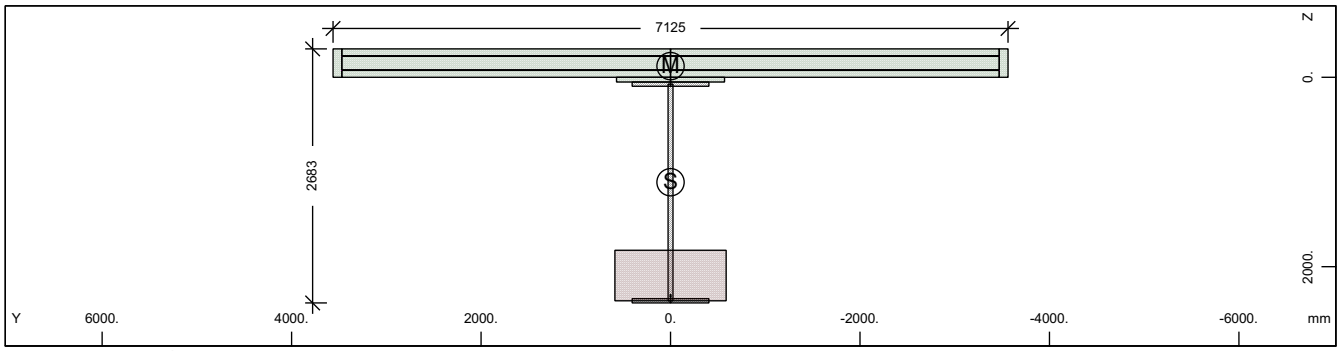

Cross section No. 181 - VFT (153)

Static properties of cross section

Mat NoR	A[cm2] It[cm4]	Ay/Az/Ayz [cm2]	Iy/Iz/Iyz [cm4]	ys/zs [mm]	y/z-sc [mm]	modules [N/mm2]	gam [kN/m]
1	2652.75	362.50	24723445.	0.0	0.0	210000	85.60
	6270.0	787.34	17052861.	1108.2	-118.1	80769	

Additional static properties of cross section

Alfa-T [1/°K]	ymin ymax [mm]	zmin zmax [mm]	hymin hzmin [mm]	AK AB [cm2]	MB	Tau-T Tau-B [1/m3]	Tau-Vy Tau-Vz [1/m2]
1.2E-05	-3562.5	-1408.2		4.220E+03		4.037E+00	3.362E+01
	3562.5	1274.7		2.821E+04		1.255E+02	1.782E+01

Section values for warping

Wmin[cm2]	Wmax[cm2]	CM[cm6]	CMS[cm4]	ASwyy[cm6]	ASwzz[cm6]	ry[mm]	rz[mm]
-10037.86	10037.86	1.342E+10	2935130.9	122.96	178.27	0.0	1595.9

SOFiSTiK AG - www.sofistik.de

Composite bridge 38+50+38, b=14.25m, 2x2HL1100R HISTAR460 , slab 0.30m C30/37

Partial cross sections

Mat NoR	A[cm2] It[cm4]	Ay/Az/Ayz [cm2]	Iy/Iz/Iyz [cm4]	ys/zs [mm]	modules [N/mm2]	gam [kN/m]
1	1918.72	0.12	14729773.	0.0	210000	15.06
	15644.1	513.92	398580.9	1216.5	80769	
25	6268.24		1489085.4	0.0	10667	15.67
	28797889.	43.56	0.0	2093.5	4444	
210	0.64	0.00	0.0	0.0	200000	0.00
	2.2	0.00	0.0	2310.4	76923	
31	21945.00	17674.97	170028.4	0.0	0	54.86
	6417251.4	12376.26	904880243.	-145.5	0	
300	435.78	380.50	24512.9	0.0	200000	0.00
	14.3	284.04	17486990.	-150.0	76923	

Design values of cross section

Mat NoR	A[cm2] It[cm4]	Ay/Az/Ayz [cm2]	Iy/Iz/Iyz [cm4]	ys/zs [mm]	modules [N/mm2]	gam [kN/m]
1	2578.46	362.50	23963830.	0.0	182609	85.60
	6270.0	786.27	17052859.	1079.8	70234	

Design forces and moments
(C/E = characteristic plastic/elastic, D=plast.Design, F=elast. Design)

	N[kN]	Vy[kN]	Vz[kN]	Mt[kNm]	My[kNm]	Mz[kNm]	y[mm]	z[mm]	BUCK
C	86098.5	62907.59	62615.57	105581.1	90139.38	103319.6	26.1	-74.3	c c
C	-83819.7				160924.9	0.00	0.0	1108.	COMB
C	-42319.9				0.00	103378.5	0.0	0.0	COMB
C	-159593.	62907.59	62615.56	105581.1	-96909.8	-102828.	-26.1	1132.	
C	-820.0				-96919.5	0.00	0.0	1108.	COMB
C	-42319.9				0.00	-103379.	0.0	0.0	COMB
E	88867.2	8587.40	16200.76	4087.40	64973.00	25803.25	0.0	1108.	
E	-88867.2	8587.40	16200.76	4087.40	-64973.0	-25803.2	0.0	1108.	
D	74868.2	47355.45	47042.47	70592.23	77193.91	77665.86	20.0	-40.5	
D	-59528.9				123188.8	0.00	0.0	1108.	COMB
D	-28213.2				0.00	77697.22	0.0	0.0	COMB
D	-123865.	47355.45	47042.47	70592.21	-80359.7	-77415.0	-20.0	1006.	
D	3102.4				-80518.5	0.00	0.0	1108.	COMB
D	-28213.2				0.00	-77697.2	0.0	0.0	COMB
F	77275.8	7467.30	14087.62	2724.93	56498.26	22437.61	0.0	1108.	
F	-77275.8	7467.30	14087.62	2724.93	-56498.3	-22437.6	0.0	1108.	

Additional Design Data

M	periphery-O/-I [m2/m]	[m2/m]	deff [mm]	t-min [mm]	t-max [mm]	SMP [o/o]	thet-p [tm2/m]	thet-y [tm2/m]	thet-z [tm2/m]	thet-yz [tm2/m]
	53.175		10.0	3.1	533.9	0.0	30.889	8.235	22.653	
1	7.816		49.1	45.0	52.0	0.0	1.188	1.156	0.031	
25	1.068		1174.0			0.0	0.037	0.037		
**	0.004		32.0			0.0	0.000		0.000	
31	16.530		265.5	50.0	300.0	0.0	22.626	0.004	22.622	
**	27.757		3.1	3.1	3.1	0.0	0.000	0.000	0.000	

SOFiSTiK AG - www.sofistik.de

Composite bridge 38+50+38, b=14.25m, 2x2HL1100R HISTAR460 , slab 0.30m C30/37

Cross section No. 181.1 = CS 1 - steel alone

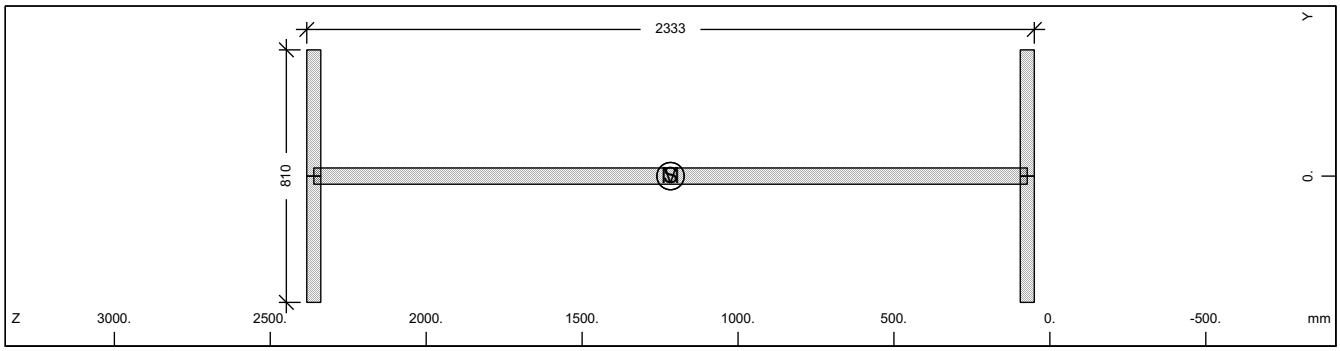

Cross section No. 181

Static properties of cross section

Mat NoR	A[cm2] It[cm4]	Ay/Az/Ayz [cm2]	Iy/Iz/Iyz [cm4]	ys/zs [mm]	modules [N/mm2]	gam [kN/m]
1	1918.72	607.50	14729773.	0.0	210000	15.06
	6270.0	1129.38	398580.9	1216.5	80769	

Additional static properties of cross section

Alfa-T [1/°K]	ymin ymax [mm]	zmin zmax [mm]	hymin hzmin [mm]	AK AB [cm2]	MB	Tau-T Tau-B [1/m3]	Tau-Vy Tau-Vz [1/m2]
1.2E-05	-405.0	-1166.5		1.157E+03		3.324E+02	2.058E+01
	405.0	1166.5				1.255E+02	9.886E+00

Section values for warping

Wmin[cm2]	Wmax[cm2]	CM[cm6]	CMS[cm4]	ASwyy[cm6]	ASwzz[cm6]	ry[mm]	rz[mm]
-4633.04	4633.045216013661.		7950027.3	4.81	177.57	0.0	0.0

Design values of cross section

Mat NoR	A[cm2] It[cm4]	Ay/Az/Ayz [cm2]	Iy/Iz/Iyz [cm4]	ys/zs [mm]	modules [N/mm2]	gam [kN/m]
1	1918.72	607.50	14729773.	0.0	182609	15.06
	6270.0	1129.38	398580.9	1216.5	70234	

Design forces and moments
(C/E = characteristic plastic/elastic, D=plast.Design, F=elast. Design)

	N[kN]	Vy[kN]	Vz[kN]	Mt[kNm]	My[kNm]	Mz[kNm]	y[mm]	z[mm]	BUCK
C	64277.1	14099.76	23010.64	915.52	50733.87	5463.48	0.0	1216.	c c
C	0.0				0.00	0.00	0.0	0.0	COMB
E	64277.1	9399.84	19564.13	581.88	42302.96	3296.90	0.0	1216.	
D	55893.1	12260.66	20009.25	796.11	44116.40	4750.85	0.0	1216.	
D	0.0				0.00	0.00	0.0	0.0	COMB
F	55893.1	8173.78	17012.29	505.98	36785.18	2866.87	0.0	1216.	

Additional Design Data

M	periphery-O/-I [m2/m] [m2/m]	deff [mm]	t-min [mm]	t-max [mm]	SMP [o/o]	thet-p [tm2/m]	thet-y [tm2/m]	thet-z [tm2/m]	thet-yz [tm2/m]
	7.816	49.1	45.0	52.0	0.0	1.188	1.156	0.031	

SOFiSTiK AG - www.sofistik.de

Composite bridge 38+50+38, b=14.25m, 2x2HL1100R HISTAR460 , slab 0.30m C30/37

Cross section No. 181.2 = CS 10 - prefab. slab C1

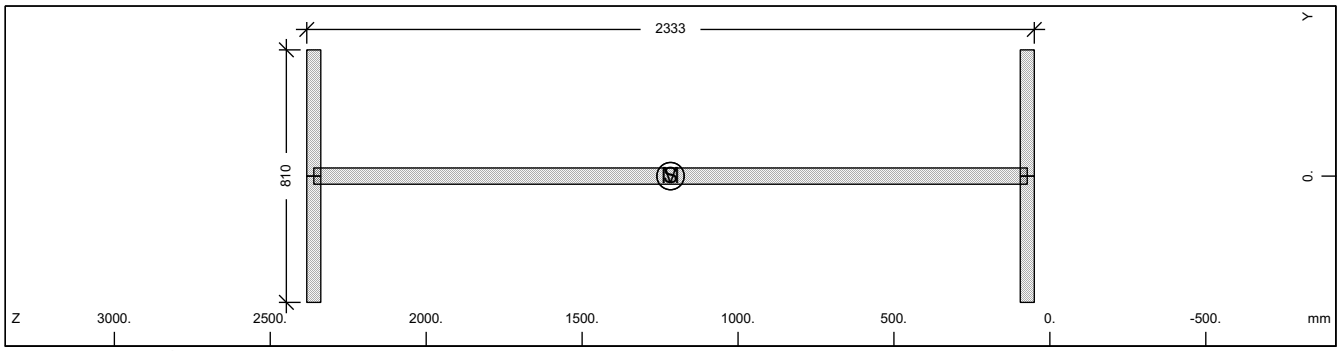

Cross section No. 181

Static properties of cross section

Mat NoR	A[cm2] It[cm4]	Ay/Az/Ayz [cm2]	Iy/Iz/Iyz [cm4]	ys/zs [mm]	modules [N/mm2]	gam [kN/m]
1	1918.72	607.50	14729773.	0.0	210000	15.06
	6270.0	1129.38	398580.9	1216.5	80769	

Additional static properties of cross section

Alfa-T [1/°K]	ymin ymax [mm]	zmin zmax [mm]	hymin hzmin [mm]	AK AB [cm2]	MB	Tau-T Tau-B [1/m3]	Tau-Vy Tau-Vz [1/m2]
1.2E-05	-405.0	-1166.5		1.157E+03		3.324E+02	2.058E+01
	405.0	1166.5				1.255E+02	9.886E+00

Section values for warping

Wmin[cm2]	Wmax[cm2]	CM[cm6]	CMS[cm4]	ASwyy[cm6]	ASwzz[cm6]	ry[mm]	rz[mm]
-4633.04	4633.045	216013661.	7950027.3	4.81	177.57	0.0	0.0

Design values of cross section

Mat NoR	A[cm2] It[cm4]	Ay/Az/Ayz [cm2]	Iy/Iz/Iyz [cm4]	ys/zs [mm]	modules [N/mm2]	gam [kN/m]
1	1918.72	607.50	14729773.	0.0	182609	15.06
	6270.0	1129.38	398580.9	1216.5	70234	

Design forces and moments
(C/E = characteristic plastic/elastic, D=plast.Design, F=elast. Design)

	N[kN]	Vy[kN]	Vz[kN]	Mt[kNm]	My[kNm]	Mz[kNm]	y[mm]	z[mm]	BUCK
C	64277.1	14099.76	23010.64	915.52	50733.87	5463.48	0.0	1216.	c c
C	0.0				0.00	0.00	0.0	0.0	COMB
E	64277.1	9399.84	19564.13	581.88	42302.96	3296.90	0.0	1216.	
D	55893.1	12260.66	20009.25	796.11	44116.40	4750.85	0.0	1216.	
D	0.0				0.00	0.00	0.0	0.0	COMB
F	55893.1	8173.78	17012.29	505.98	36785.18	2866.87	0.0	1216.	

Additional Design Data

M	periphery-O/-I [m2/m] [m2/m]	deff [mm]	t-min [mm]	t-max [mm]	SMP [o/o]	thet-p [tm2/m]	thet-y [tm2/m]	thet-z [tm2/m]	thet-yz [tm2/m]
	7.816	49.1	45.0	52.0	0.0	1.188	1.156	0.031	

SOFiSTiK AG - www.sofistik.de

Composite bridge 38+50+38, b=14.25m, 2x2HL1100R HISTAR460 , slab 0.30m C30/37

Cross section No. 181.3 = CS 20 - in-situ conc:C2

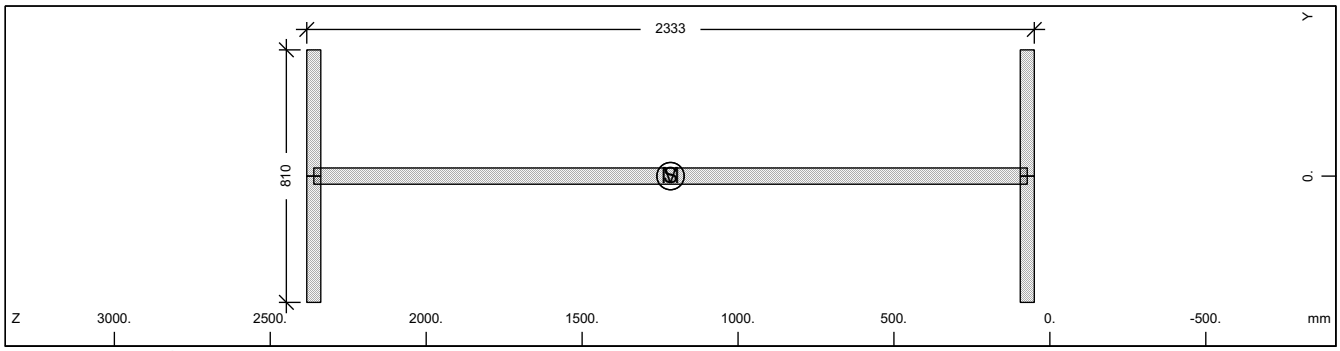

Cross section No. 181

Static properties of cross section

Mat NoR	A[cm2] It[cm4]	Ay/Az/Ayz [cm2]	Iy/Iz/Iyz [cm4]	ys/zs [mm]	modules [N/mm2]	gam [kN/m]
1	1918.72	607.50	14729773.	0.0	210000	15.06
	6270.0	1129.38	398580.9	1216.5	80769	

Additional static properties of cross section

Alfa-T [1/°K]	ymin ymax [mm]	zmin zmax [mm]	hymin hzmin [mm]	AK AB [cm2]	MB	Tau-T Tau-B [1/m3]	Tau-Vy Tau-Vz [1/m2]
1.2E-05	-405.0	-1166.5		1.157E+03		3.324E+02	2.058E+01
	405.0	1166.5				1.255E+02	9.886E+00

Section values for warping

Wmin[cm2]	Wmax[cm2]	CM[cm6]	CMS[cm4]	ASwyy[cm6]	ASwzz[cm6]	ry[mm]	rz[mm]
-4633.04	4633.045216013661.		7950027.3	4.81	177.57	0.0	0.0

Design values of cross section

Mat NoR	A[cm2] It[cm4]	Ay/Az/Ayz [cm2]	Iy/Iz/Iyz [cm4]	ys/zs [mm]	modules [N/mm2]	gam [kN/m]
1	1918.72	607.50	14729773.	0.0	182609	15.06
	6270.0	1129.38	398580.9	1216.5	70234	

Design forces and moments
(C/E = characteristic plastic/elastic, D=plast.Design, F=elast. Design)

	N[kN]	Vy[kN]	Vz[kN]	Mt[kNm]	My[kNm]	Mz[kNm]	y[mm]	z[mm]	BUCK
C	64277.1	14099.76	23010.64	915.52	50733.87	5463.48	0.0	1216.	c c
C	0.0				0.00	0.00	0.0	0.0	COMB
E	64277.1	9399.84	19564.13	581.88	42302.96	3296.90	0.0	1216.	
D	55893.1	12260.66	20009.25	796.11	44116.40	4750.85	0.0	1216.	
D	0.0				0.00	0.00	0.0	0.0	COMB
F	55893.1	8173.78	17012.29	505.98	36785.18	2866.87	0.0	1216.	

Additional Design Data

M	periphery-O/-I [m2/m] [m2/m]	deff [mm]	t-min [mm]	t-max [mm]	SMP [o/o]	thet-p [tm2/m]	thet-y [tm2/m]	thet-z [tm2/m]	thet-yz [tm2/m]
	7.816	49.1	45.0	52.0	0.0	1.188	1.156	0.031	

SOFiSTiK AG - www.sofistik.de

Composite bridge 38+50+38, b=14.25m, 2x2HL1100R HISTAR460 , slab 0.30m C30/37

Cross section No. 181.4 = CS 21 - reinf active:C2

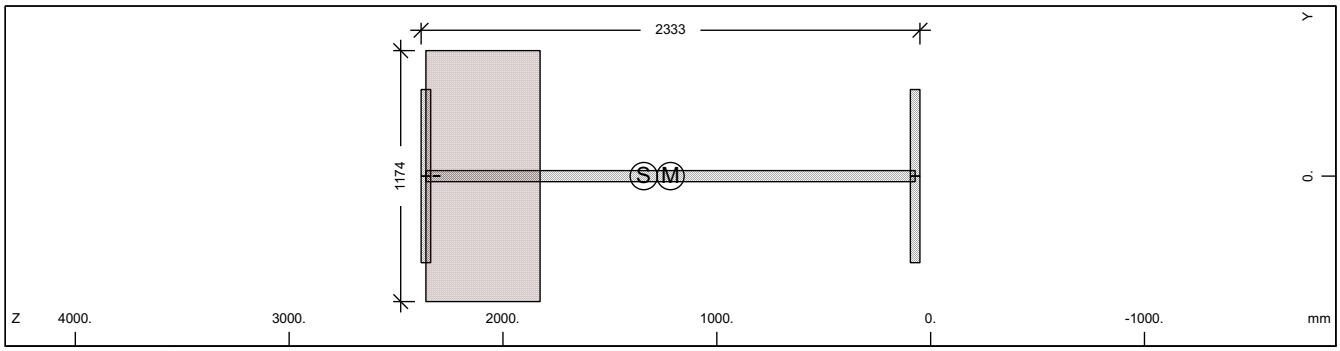

Cross section No. 181

Static properties of cross section

Mat NoR	A[cm2] It[cm4]	Ay/Az/Ayz [cm2]	Iy/Iz/Iyz [cm4]	ys/zs [mm]	modules [N/mm2]	gam [kN/m]
1	2237.72	607.50	16911449.	0.0	210000	30.73
	6270.0	1064.68	398580.9	1341.5	80769	

Additional static properties of cross section

Alfa-T [1/°K]	ymin ymax [mm]	zmin zmax [mm]	hymin hzmin [mm]	AK AB [cm2]	MB	Tau-T Tau-B [1/m3]	Tau-Vy Tau-Vz [1/m2]
1.2E-05	-587.0	-1291.5		4.220E+03		4.037E+00	2.058E+01
	587.0	1041.4		6.268E+03		1.255E+02	1.002E+01

Section values for warping

Wmin[cm2]	Wmax[cm2]	CM[cm6]	CMS[cm4]	ASwyy[cm6]	ASwzz[cm6]	ry[mm]	rz[mm]
-4633.04	4633.04	5216013661.	7950027.3	-1.00	-42.25	0.0	8.6

Partial cross sections

Mat NoR	A[cm2] It[cm4]	Ay/Az/Ayz [cm2]	Iy/Iz/Iyz [cm4]	ys/zs [mm]	modules [N/mm2]	gam [kN/m]
1	1918.72	607.50	14729773.	0.0	210000	15.06
	15644.1	1059.46	398580.9	1216.5	80769	
25	6268.24		1489085.4	0.0	10667	15.67
	28797889.	94.97	0.0	2093.5	4444	
210	0.64	0.00	0.0	0.0	200000	0.00
	2.2	0.00	0.0	2310.4	76923	

Design values of cross section

Mat NoR	A[cm2] It[cm4]	Ay/Az/Ayz [cm2]	Iy/Iz/Iyz [cm4]	ys/zs [mm]	modules [N/mm2]	gam [kN/m]
1	2163.43	607.50	16459353.	0.0	182609	30.73
	6270.0	1063.46	398580.9	1315.7	70234	

Design forces and moments
(C/E = characteristic plastic/elastic, D=plast.Design, F=elast. Design)

	N[kN]	Vy[kN]	Vz[kN]	Mt[kNm]	My[kNm]	Mz[kNm]	y[mm]	z[mm]	BUCK
C	64309.3	14118.33	33815.12	6994.31	50769.02	8305.63	5.8	1217.	c c
C	-4325.7				51037.55	0.00	0.0	1342.	COMB
C	-9402.4				0.00	8223.33	0.0	0.0	COMB
C	-83114.0	14118.33	33815.12	6994.31	-54702.8	-8195.89	-5.8	1678.	
C	-14479.1				-65177.2	0.00	0.0	1342.	COMB
C	-9402.4				0.00	-8223.33	0.0	0.0	COMB
E	74963.6	9399.84	19299.73	4087.37	43864.91	3296.90	0.0	1342.	
E	-74963.6	9399.84	19299.73	4087.37	-43864.9	-3296.90	0.0	1342.	
D	55921.1	12276.81	27305.95	4850.19	44146.98	6632.97	4.5	1217.	
D	-3761.4				44380.48	0.00	0.0	1342.	COMB
D	-6268.2				0.00	6590.80	0.0	0.0	COMB
D	-68457.6	12276.81	27305.95	4850.19	-46394.0	-6576.75	-4.5	1599.	
D	-8775.0				-53806.9	0.00	0.0	1342.	COMB
D	-6268.2				0.00	-6590.80	0.0	0.0	COMB

SOFiSTiK AG - www.sofistik.de

Composite bridge 38+50+38, b=14.25m, 2x2HL1100R HISTAR460 , slab 0.30m C30/37

Design forces and moments
(C/E = characteristic plastic/elastic, D=plast.Design, F=elast. Design)

	N[kN]	Vy[kN]	Vz[kN]	Mt[kNm]	My[kNm]	Mz[kNm]	y[mm]	z[mm]	BUCK
F	65185.7	8173.78	16782.37	2724.91	38143.40	2866.87	0.0	1342.	
F	-65185.7	8173.78	16782.37	2724.91	-38143.4	-2866.87	0.0	1342.	

Additional Design Data

M	periphery-O/-I [m2/m]	[m2/m]	deff [mm]	t-min [mm]	t-max [mm]	SMP [o/o]	thet-p [tm2/m]	thet-y [tm2/m]	thet-z [tm2/m]	thet-yz [tm2/m]
	8.888		50.4	32.0	533.9	0.0	1.816	1.784	0.031	
1	7.816		49.1	45.0	52.0	0.0	1.188	1.156	0.031	
25	1.068		1174.0			0.0	0.037	0.037		
**	0.004		32.0			0.0	0.000		0.000	

Cross section No. 181.5 = CS 30 - in-situ conc:C3

Cross section No. 182 - VFT (153)

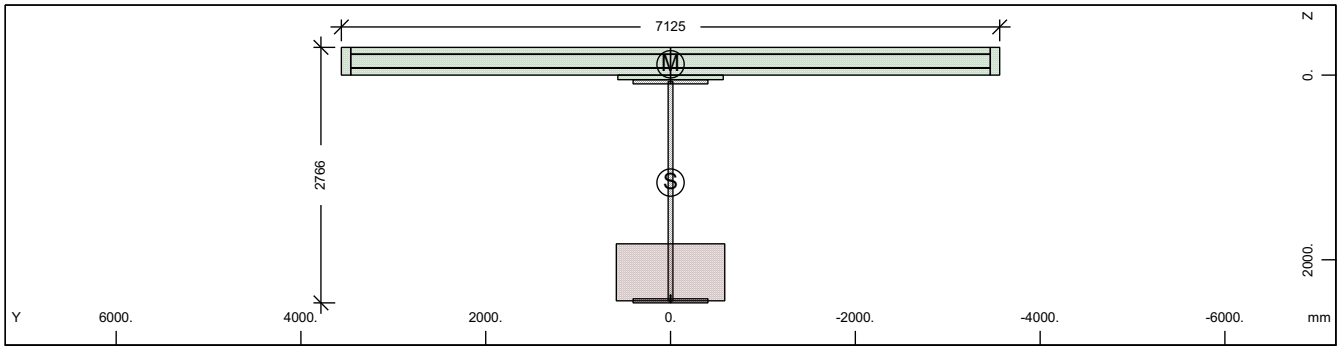

Cross section No. 182 - VFT (153)

Static properties of cross section

Mat NoR	A[cm2] It[cm4]	Ay/Az/Ayz [cm2]	Iy/Iz/Iyz [cm4]	ys/zs [mm]	y/z-sc [mm]	modules [N/mm2]	gam [kN/m]
1	2744.98	361.73	26973725.	0.0	0.0	210000	88.39
	6270.0	823.54	16929893.	1163.7	-116.8	80769	

Additional static properties of cross section

Alfa-T [1/°K]	ymin ymax [mm]	zmin zmax [mm]	hymin hzmin [mm]	AK AB [cm2]	MB	Tau-T Tau-B [1/m3]	Tau-Vy Tau-Vz [1/m2]
1.2E-05	-3562.5	-1463.7		4.875E+03		3.495E+00	3.369E+01
	3562.5	1302.7		2.919E+04		1.255E+02	1.697E+01

Section values for warping

Wmin[cm2]	Wmax[cm2]	CM[cm6]	CMS[cm4]	ASwyy[cm6]	ASwzz[cm6]	ry[mm]	rz[mm]
-10371.25	10371.25	1.425E+10	3282206.5	-198.95	-316.98	0.0	1713.3

Partial cross sections

Mat NoR	A[cm2] It[cm4]	Ay/Az/Ayz [cm2]	Iy/Iz/Iyz [cm4]	ys/zs [mm]	modules [N/mm2]	gam [kN/m]
1	1962.16	0.12	16028558.	0.0	210000	15.40
	16035.6	550.80	398580.9	1258.2	80769	
25	7248.92		2303044.3	0.0	10667	18.12
	33303371.	58.78	0.0	2135.2	4444	
210	0.64	0.00	0.0	0.0	200000	0.00
	2.2	0.00	0.0	2394.0	76923	
31	21945.00	17856.55	170028.4	0.0	0	54.86
	6417251.4	12401.95	904880243.	-145.5	0	
300	434.71	379.69	24452.4	0.0	200000	0.00
	14.3	282.45	17357874.	-150.0	76923	

SOFiSTiK AG - www.sofistik.de

Composite bridge 38+50+38, b=14.25m, 2x2HL1100R HISTAR460 , slab 0.30m C30/37

Design values of cross section

Mat NoR	A[cm2] It[cm4]	Ay/Az/Ayz [cm2]	Iy/Iz/Iyz [cm4]	ys/zs [mm]	modules [N/mm2]	gam [kN/m]
1	2659.06	361.73	26109365.	0.0	182609	88.39
	6270.0	822.28	16929893.	1132.3	70234	

Design forces and moments
(C/E = characteristic plastic/elastic, D=plast.Design, F=elast. Design)

	N[kN]	Vy[kN]	Vz[kN]	Mt[kNm]	My[kNm]	Mz[kNm]	y[mm]	z[mm]	BUCK
C	87499.9	62876.55	65073.81	106552.7	94761.41	103622.2	25.1	-74.0	c c
C	-84245.8				168388.1	0.00	0.0	1164.	COMB
C	-43790.9				0.00	103642.9	0.0	0.0	COMB
C	-162909.	62876.55	65073.80	106552.7	-103166.	-103075.	-25.1	1259.	
C	-3336.0				-103325.	0.00	0.0	1164.	COMB
C	-43790.9				0.00	-103643.	0.0	0.0	COMB
E	91956.7	8567.70	17010.40	4721.62	69363.46	25680.54	0.0	1164.	
E	-91956.7	8567.70	17010.40	4721.62	-69363.5	-25680.5	0.0	1164.	
D	76086.8	47328.46	48851.77	71244.41	81162.94	77837.58	20.0	-31.3	
D	-59899.4				128936.7	0.00	0.0	1164.	COMB
D	-29193.9				0.00	77839.51	0.0	0.0	COMB
D	-126360.	47328.46	48851.76	71244.39	-85523.9	-77547.7	-20.0	1114.	
D	1511.5				-85561.6	0.00	0.0	1164.	COMB
D	-29193.9				0.00	-77839.5	0.0	0.0	COMB
F	79962.4	7450.17	14791.66	3147.75	60316.05	22330.90	0.0	1164.	
F	-79962.4	7450.17	14791.66	3147.75	-60316.1	-22330.9	0.0	1164.	

Additional Design Data

M	periphery-O/-I [m2/m]	[m2/m]	deff [mm]	t-min [mm]	t-max [mm]	SMP [o/o]	thet-p [tm2/m]	thet-y [tm2/m]	thet-z [tm2/m]	thet-yz [tm2/m]
	53.440		10.3	3.1	617.5	0.0	31.951	9.298	22.653	
1	7.983		49.2	45.0	52.0	0.0	1.290	1.258	0.031	
25	1.235		1174.0			0.0	0.058	0.058		
**	0.004		32.0			0.0	0.000		0.000	
31	16.530		265.5	50.0	300.0	0.0	22.626	0.004	22.622	
**	27.688		3.1	3.1	3.1	0.0	0.000	0.000	0.000	

Cross section No. 182.1 = CS 1 - steel alone

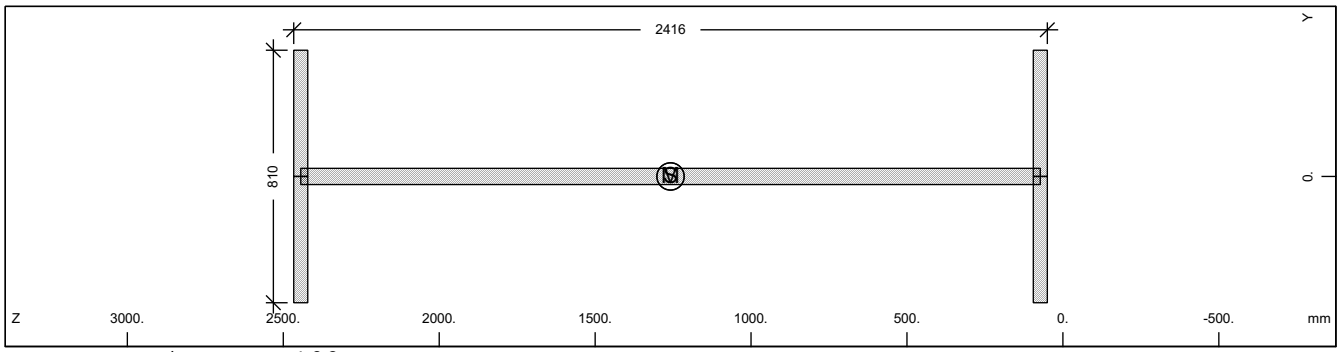

Cross section No. 182

Static properties of cross section

Mat NoR	A[cm2] It[cm4]	Ay/Az/Ayz [cm2]	Iy/Iz/Iyz [cm4]	ys/zs [mm]	modules [N/mm2]	gam [kN/m]
1	1962.16	607.50	16028558.	0.0	210000	15.40
	6270.0	1171.20	398580.9	1258.2	80769	

Additional static properties of cross section

Alfa-T [1/°K]	ymin ymax [mm]	zmin zmax [mm]	hymin hzmin [mm]	AK AB [cm2]	MB	Tau-T Tau-B [1/m3]	Tau-Vy Tau-Vz [1/m2]
1.2E-05	-405.0	-1208.2		1.186E+03		3.243E+02	2.058E+01
	405.0	1208.2				1.255E+02	9.571E+00

SOFiSTiK AG - www.sofistik.de

Composite bridge 38+50+38, b=14.25m, 2x2HL1100R HISTAR460 , slab 0.30m C30/37

Section values for warping

Wmin[cm2]	Wmax[cm2]	CM[cm6]	CMS[cm4]	ASwyy[cm6]	ASwzz[cm6]	ry[mm]	rz[mm]
-4802.20	4802.205603844788.	8541143.0		4.64	186.57	0.0	0.0

Design values of cross section

Mat NoR	A[cm2] It[cm4]	Ay/Az/Ayz [cm2]	Iy/Iz/Iyz [cm4]	ys/zs [mm]	modules [N/mm2]	gam [kN/m]
1	1962.16	607.50	16028558.	0.0	182609	15.40
	6270.0	1171.20	398580.9	1258.2	70234	

Design forces and moments
(C/E = characteristic plastic/elastic, D=plast.Design, F=elast. Design)

	N[kN]	Vy[kN]	Vz[kN]	Mt[kNm]	My[kNm]	Mz[kNm]	y[mm]	z[mm]	BUCK
C	65732.2	14099.76	23850.77	937.36	53448.88	5482.40	0.0	1258.	c c
C	0.0				0.00	0.00	0.0	0.0	COMB
E	65732.2	9399.84	20207.76	596.44	44441.70	3296.90	0.0	1258.	
D	57158.5	12260.66	20739.80	815.10	46477.29	4767.30	0.0	1258.	
D	0.0				0.00	0.00	0.0	0.0	COMB
F	57158.5	8173.78	17571.97	518.64	38644.95	2866.87	0.0	1258.	

Additional Design Data

M	periphery-O/-I [m2/m]	[m2/m]	deff [mm]	t-min [mm]	t-max [mm]	SMP [o/o]	thet-p [tm2/m]	thet-y [tm2/m]	thet-z [tm2/m]	thet-yz [tm2/m]
	7.983		49.2	45.0	52.0	0.0	1.290	1.258	0.031	

Cross section No. 182.2 = CS 10 - prefab. slab C1

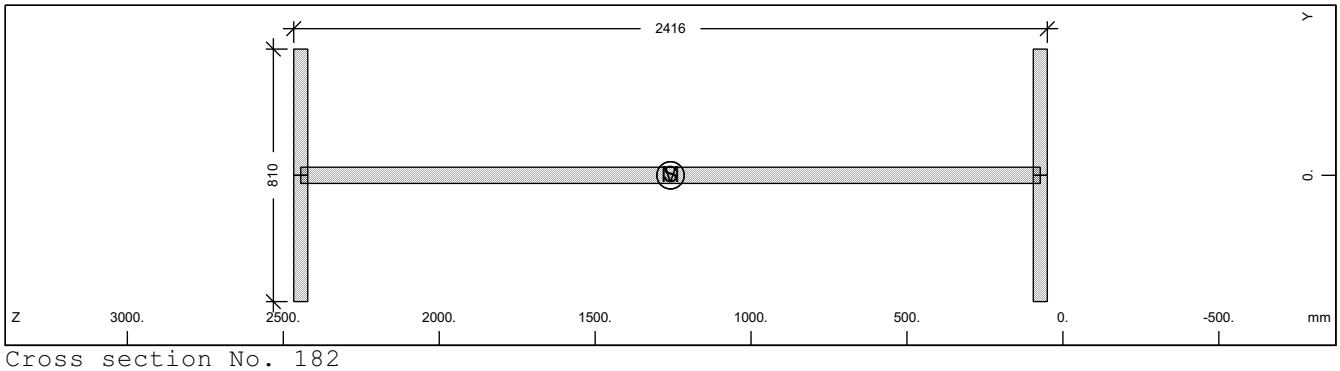

Cross section No. 182

Static properties of cross section

Mat NoR	A[cm2] It[cm4]	Ay/Az/Ayz [cm2]	Iy/Iz/Iyz [cm4]	ys/zs [mm]	modules [N/mm2]	gam [kN/m]
1	1962.16	607.50	16028558.	0.0	210000	15.40
	6270.0	1171.20	398580.9	1258.2	80769	

Additional static properties of cross section

Alfa-T [1/°K]	ymin / ymax [mm]	zmin / zmax [mm]	hymin / hzmin [mm]	AK / AB [cm2]	MB	Tau-T / Tau-B [1/m3]	Tau-Vy / Tau-Vz [1/m2]
1.2E-05	-405.0	-1208.2		1.186E+03		3.243E+02	2.058E+01
	405.0	1208.2				1.255E+02	9.571E+00

Section values for warping

Wmin[cm2]	Wmax[cm2]	CM[cm6]	CMS[cm4]	ASwyy[cm6]	ASwzz[cm6]	ry[mm]	rz[mm]
-4802.20	4802.205603844788.	8541143.0		4.64	186.57	0.0	0.0

Design values of cross section

Mat NoR	A[cm2] It[cm4]	Ay/Az/Ayz [cm2]	Iy/Iz/Iyz [cm4]	ys/zs [mm]	modules [N/mm2]	gam [kN/m]
1	1962.16	607.50	16028558.	0.0	182609	15.40
	6270.0	1171.20	398580.9	1258.2	70234	

SOFiSTiK AG - www.sofistik.de

Composite bridge 38+50+38, b=14.25m, 2x2HL1100R HISTAR460 , slab 0.30m C30/37

Design forces and moments
(C/E = characteristic plastic/elastic, D=plast.Design, F=elast. Design)

	N[kN]	Vy[kN]	Vz[kN]	Mt[kNm]	My[kNm]	Mz[kNm]	y[mm]	z[mm]	BUCK
C	65732.2	14099.76	23850.77	937.36	53448.88	5482.40	0.0	1258.	c c
C	0.0				0.00	0.00	0.0	0.0	COMB
E	65732.2	9399.84	20207.76	596.44	44441.70	3296.90	0.0	1258.	
D	57158.5	12260.66	20739.80	815.10	46477.29	4767.30	0.0	1258.	
D	0.0				0.00	0.00	0.0	0.0	COMB
F	57158.5	8173.78	17571.97	518.64	38644.95	2866.87	0.0	1258.	

Additional Design Data

M	periphery-O/-I [m2/m]	[m2/m]	deff [mm]	t-min [mm]	t-max [mm]	SMP [o/o]	thet-p [tm2/m]	thet-y [tm2/m]	thet-z [tm2/m]	thet-yz [tm2/m]
	7.983		49.2	45.0	52.0	0.0	1.290	1.258	0.031	

Cross section No. 182.3 = CS 20 - in-situ conc:C2

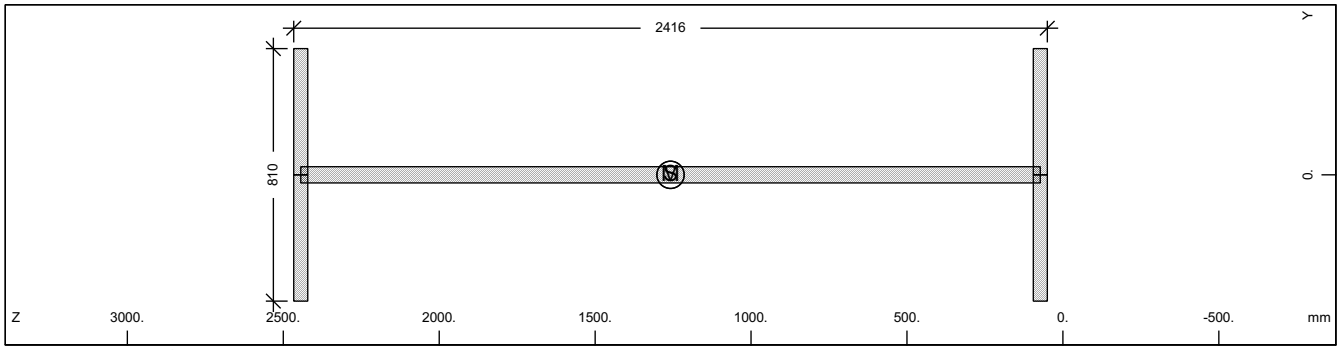

Cross section No. 182

Static properties of cross section

Mat NoR	A[cm2] It[cm4]	Ay/Az/Ayz [cm2]	Iy/Iz/Iyz [cm4]	ys/zs [mm]	modules [N/mm2]	gam [kN/m]
1	1962.16	607.50	16028558.	0.0	210000	15.40
	6270.0	1171.20	398580.9	1258.2	80769	

Additional static properties of cross section

Alfa-T [1/°K]	ymin ymax [mm]	zmin zmax [mm]	hymin hzmin [mm]	AK AB [cm2]	MB	Tau-T Tau-B [1/m3]	Tau-Vy Tau-Vz [1/m2]
1.2E-05	-405.0	-1208.2		1.186E+03		3.243E+02	2.058E+01
	405.0	1208.2				1.255E+02	9.571E+00

Section values for warping

Wmin[cm2]	Wmax[cm2]	CM[cm6]	CMS[cm4]	ASwyy[cm6]	ASwzz[cm6]	ry[mm]	rz[mm]
-4802.20	4802.205603844788.		8541143.0	4.64	186.57	0.0	0.0

Design values of cross section

Mat NoR	A[cm2] It[cm4]	Ay/Az/Ayz [cm2]	Iy/Iz/Iyz [cm4]	ys/zs [mm]	modules [N/mm2]	gam [kN/m]
1	1962.16	607.50	16028558.	0.0	182609	15.40
	6270.0	1171.20	398580.9	1258.2	70234	

Design forces and moments
(C/E = characteristic plastic/elastic, D=plast.Design, F=elast. Design)

	N[kN]	Vy[kN]	Vz[kN]	Mt[kNm]	My[kNm]	Mz[kNm]	y[mm]	z[mm]	BUCK
C	65732.2	14099.76	23850.77	937.36	53448.88	5482.40	0.0	1258.	c c
C	0.0				0.00	0.00	0.0	0.0	COMB
E	65732.2	9399.84	20207.76	596.44	44441.70	3296.90	0.0	1258.	
D	57158.5	12260.66	20739.80	815.10	46477.29	4767.30	0.0	1258.	
D	0.0				0.00	0.00	0.0	0.0	COMB
F	57158.5	8173.78	17571.97	518.64	38644.95	2866.87	0.0	1258.	

SOFiSTiK AG - www.sofistik.de

Composite bridge 38+50+38, b=14.25m, 2x2HL1100R HISTAR460 , slab 0.30m C30/37

Additional Design Data

M	periphery-O/-I [m2/m]	[m2/m]	deff [mm]	t-min [mm]	t-max [mm]	SMP [o/o]	thet-p [tm2/m]	thet-y [tm2/m]	thet-z [tm2/m]	thet-yz [tm2/m]
	7.983		49.2	45.0	52.0	0.0	1.290	1.258	0.031	

Cross section No. 182.4 = CS 21 - reinf active:C2

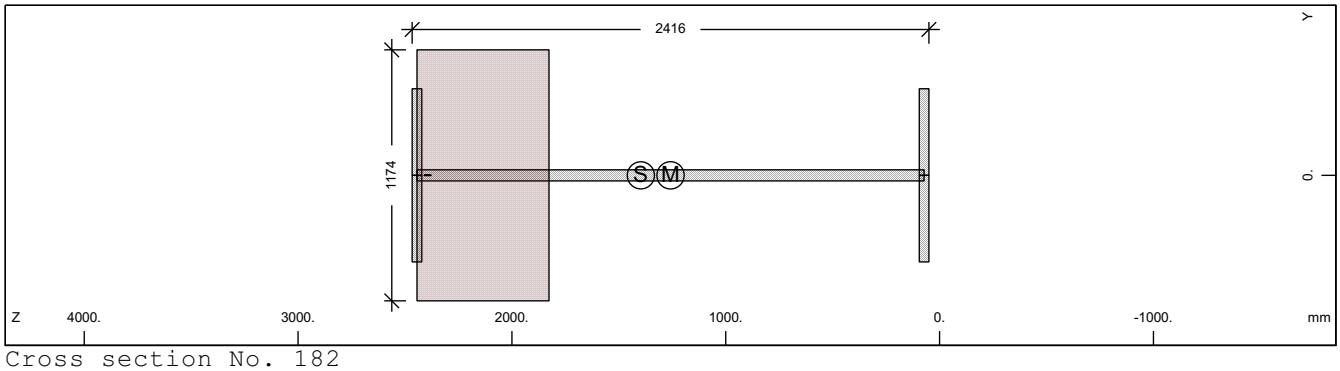

Cross section No. 182

Static properties of cross section

Mat NoR	A[cm2] It[cm4]	Ay/Az/Ayz [cm2]	Iy/Iz/Iyz [cm4]	ys/zs [mm]	modules [N/mm2]	gam [kN/m]
1	2330.97	607.50	18536103.	0.0	210000	33.53
	6270.0	1091.17	398580.9	1397.1	80769	

Additional static properties of cross section

Alfa-T [1/°K]	ymin ymax [mm]	zmin zmax [mm]	hymin hzmin [mm]	AK AB [cm2]	MB	Tau-T Tau-B [1/m3]	Tau-Vy Tau-Vz [1/m2]
1.2E-05	-587.0	-1347.1		4.875E+03		3.495E+00	2.058E+01
	587.0	1069.4		7.249E+03		1.255E+02	9.741E+00

Section values for warping

Wmin[cm2]	Wmax[cm2]	CM[cm6]	CMS[cm4]	ASwyy[cm6]	ASwzz[cm6]	ry[mm]	rz[mm]
-4802.20	4802.20	5603845254.	8541143.7	-2.81	-130.83	0.0	5.9

Partial cross sections

Mat NoR	A[cm2] It[cm4]	Ay/Az/Ayz [cm2]	Iy/Iz/Iyz [cm4]	ys/zs [mm]	modules [N/mm2]	gam [kN/m]
1	1962.16	607.50	16028558.	0.0	210000	15.40
	16035.6	1084.58	398580.9	1258.2	80769	
25	7248.92		2303044.3	0.0	10667	18.12
	33303371.	119.82	0.0	2135.2	4444	
210	0.64	0.00	0.0	0.0	200000	0.00
	2.2	0.00	0.0	2394.0	76923	

Design values of cross section

Mat NoR	A[cm2] It[cm4]	Ay/Az/Ayz [cm2]	Iy/Iz/Iyz [cm4]	ys/zs [mm]	modules [N/mm2]	gam [kN/m]
1	2245.06	607.50	18022756.	0.0	182609	33.53
	6270.0	1089.63	398580.9	1368.8	70234	

Design forces and moments
(C/E = characteristic plastic/elastic, D=plast.Design, F=elast. Design)

	N[kN]	Vy[kN]	Vz[kN]	Mt[kNm]	My[kNm]	Mz[kNm]	y[mm]	z[mm]	BUCK
C	65764.4	14118.33	36273.36	7965.99	53485.39	8780.20	6.5	1259.	c c
C	-4804.7				53816.68	0.00	0.0	1397.	COMB
C	-10873.4				0.00	8673.99	0.0	0.0	COMB
C	-87511.2	14118.33	36273.36	7965.99	-58421.2	-8638.58	-6.5	1767.	
C	-16942.1				-69869.5	0.00	0.0	1397.	COMB
C	-10873.4				0.00	-8673.99	0.0	0.0	COMB
E	78087.4	9399.84	19854.54	4721.59	46097.49	3296.90	0.0	1397.	
E	-78087.4	9399.84	19854.54	4721.59	-46097.5	-3296.90	0.0	1397.	
D	57186.4	12276.81	29115.25	5502.41	46509.03	6949.51	5.0	1259.	

SOFiSTiK AG - www.sofistik.de

Composite bridge 38+50+38, b=14.25m, 2x2HL1100R HISTAR460 , slab 0.30m C30/37

Design forces and moments
(C/E = characteristic plastic/elastic, D=plast.Design, F=elast. Design)

	N[kN]	Vy[kN]	Vz[kN]	Mt[kNm]	My[kNm]	Mz[kNm]	y[mm]	z[mm]	BUCK
D	-4178.0				46797.11	0.00	0.0	1397.	COMB
D	-7248.9				0.00	6895.08	0.0	0.0	COMB
D	-71684.3	12276.81	29115.25	5502.41	-49339.5	-6876.94	-5.0	1683.	
D	-10319.9				-57499.0	0.00	0.0	1397.	COMB
D	-7248.9				0.00	-6895.08	0.0	0.0	COMB
F	67902.1	8173.78	17264.82	3147.73	40084.77	2866.87	0.0	1397.	
F	-67902.1	8173.78	17264.82	3147.73	-40084.8	-2866.87	0.0	1397.	

Additional Design Data

M	periphery-O/-I [m2/m]	[m2/m]	deff [mm]	t-min [mm]	t-max [mm]	SMP [o/o]	thet-p [tm2/m]	thet-y [tm2/m]	thet-z [tm2/m]	thet-yz [tm2/m]
	9.222		50.6	32.0	617.5	0.0	1.987	1.956	0.031	
1	7.983		49.2	45.0	52.0	0.0	1.290	1.258	0.031	
25	1.235		1174.0			0.0	0.058	0.058		
**	0.004		32.0			0.0	0.000		0.000	

Cross section No. 182.5 = CS 30 - in-situ conc:C3

Cross section No. 251 - VFT

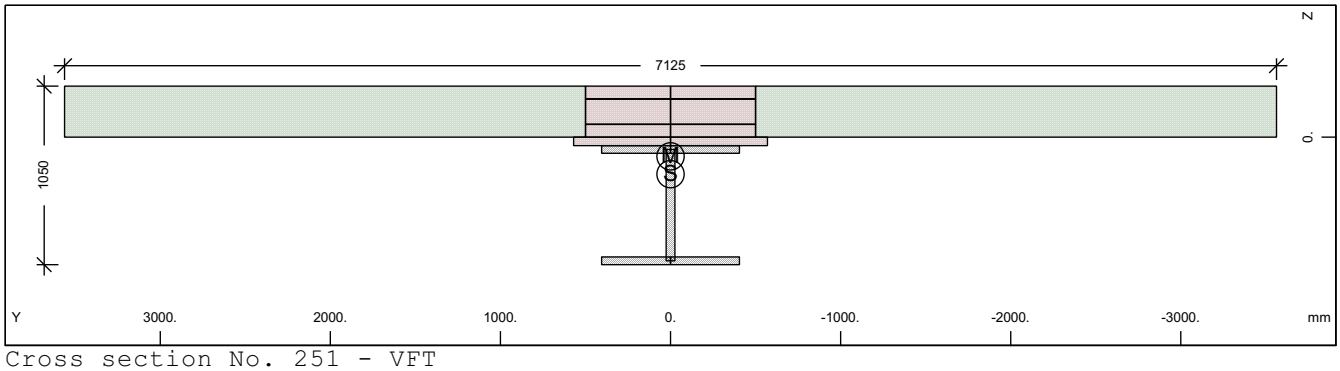

Cross section No. 251 - VFT

Static properties of cross section

Mat NoR	A[cm2] It[cm4]	Ay/Az/Ayz [cm2]	Iy/Iz/Iyz [cm4]	ys/zs [mm]	y/z-sc [mm]	modules [N/mm2]	gam [kN/m]
1	1642.18	1074.80	1946674.3	0.0	0.0	210000	63.26
	6270.0	462.67	897984.0	217.7	112.9	80769	

Additional static properties of cross section

Alfa-T [1/°K]	ymin ymax [mm]	zmin zmax [mm]	hymin hzmin [mm]	AK AB [cm2]	MB	Tau-T Tau-B [1/m3]	Tau-Vy Tau-Vz [1/m2]
1.2E-05	-3562.5	-517.7		2.115E+03		3.225E+01	1.326E+01
	3562.5	532.3		2.195E+04		1.189E+02	2.503E+01

Section values for warping

Wmin[cm2]	Wmax[cm2]	CM[cm6]	CMS[cm4]	ASwyy[cm6]	ASwzz[cm6]	ry[mm]	rz[mm]
-9367.06	9367.061	042624125.	1423880.6	2.35	5.10	0.0	321.1

Partial cross sections

Mat NoR	A[cm2] It[cm4]	Ay/Az/Ayz [cm2]	Iy/Iz/Iyz [cm4]	ys/zs [mm]	modules [N/mm2]	gam [kN/m]
1	1069.60	374.63	903669.7	0.0	210000	8.40
	7990.7	428.98	398580.9	400.0	80769	
30	3570.00	4030.92	146691.2	0.0	32837	8.93
	904750.1	193.18	3117310.1	-122.1	13682	
31	18375.00	41481168.	0.0	0.0	0	45.94
	5512501.0	37388.97901762872.		-150.0	0	
300	15.07	17.99	847.8	0.0	200000	0.00
	0.0	1.01	12560.0	-150.0	76923	

SOFiSTiK AG - www.sofistik.de

Composite bridge 38+50+38, b=14.25m, 2x2HL1100R HISTAR460 , slab 0.30m C30/37

Design values of cross section

Mat NoR	A[cm2] It[cm4]	Ay/Az/Ayz [cm2]	Iy/Iz/Iyz [cm4]	ys/zs [mm]	modules [N/mm2]	gam [kN/m]
1	1511.92	915.42	1777982.7	0.0	182609	63.26
	6270.0	455.03	784247.7	247.0	70234	

Design forces and moments
(C/E = characteristic plastic/elastic, D=plast.Design, F=elast. Design)

	N[kN]	Vy[kN]	Vz[kN]	Mt[kNm]	My[kNm]	Mz[kNm]	y[mm]	z[mm]	BUCK
C	36585.2	50744.10	35388.07	99055.71	22135.36	59290.14	297.4	-132.	c d
C	-60238.3				34632.55	0.00	0.0	217.7	COMB
C	-32917.5				0.00	62637.10	0.0	0.0	COMB
C	-102420.	50744.10	35388.07	99055.72	-10272.8	-59290.1	-297.	378.2	
C	-5596.7				-10722.3	0.00	0.0	217.7	COMB
C	-32917.5				0.00	-62637.1	0.0	0.0	COMB
E	55012.9	5833.03	7727.07	523.56	7213.94	3022.57	0.0	217.7	
E	-31506.7	5833.03	7727.07	523.56	-12252.0	-3022.57	0.0	217.7	
D	31813.2	36778.50	25464.89	66149.80	18453.32	41510.95	197.9	-81.3	
D	-39023.3				25263.91	0.00	0.0	217.7	COMB
D	-21945.0				0.00	42829.79	0.0	0.0	COMB
D	-75703.2	36778.50	25464.89	66149.80	-8932.85	-41511.0	-198.	378.3	
D	-4866.7				-9323.74	0.00	0.0	217.7	COMB
D	-21945.0				0.00	-42829.8	0.0	0.0	COMB
F	47837.3	3888.69	6719.19	349.04	4809.30	2015.05	0.0	217.7	
F	-21004.4	3888.69	6719.19	349.04	-10653.9	-2015.05	0.0	217.7	

Additional Design Data

M	periphery-O/-I [m2/m]	[m2/m]	deff [mm]	t-min [mm]	t-max [mm]	SMP [o/o]	thet-p [tm2/m]	thet-y [tm2/m]	thet-z [tm2/m]	thet-yz [tm2/m]
	25.080		13.1	0.8	300.0	0.0	22.945	0.292	22.653	
1	4.550		47.0	45.0	52.0	0.0	0.102	0.071	0.031	
30	4.280		600.0	50.0	300.0	0.0	0.082	0.004	0.078	
31	12.250		300.0	300.0	300.0	0.0	22.544		22.544	
**	4.000		0.8	0.8	0.8	0.0	0.000	0.000	0.000	

Cross section No. 251.1 = CS 1 - steel alone

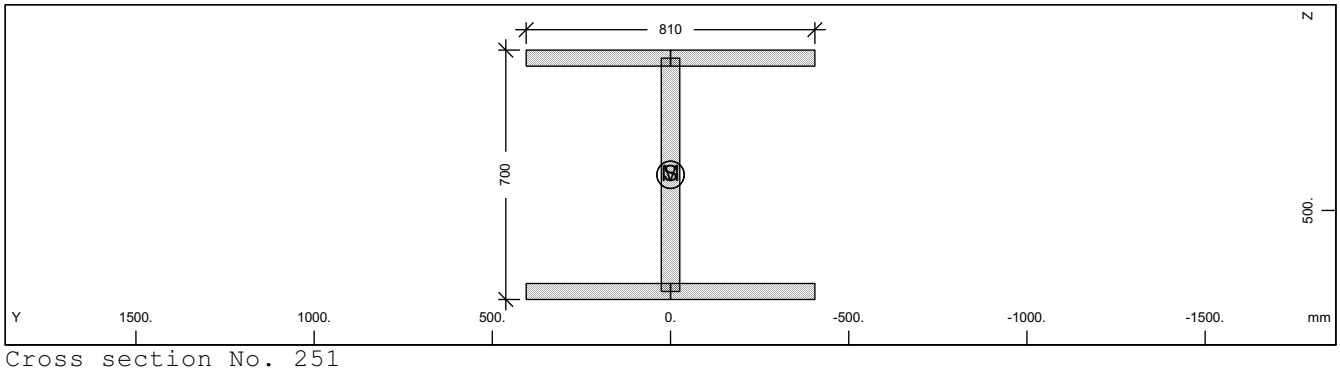

Cross section No. 251

Static properties of cross section

Mat NoR	A[cm2] It[cm4]	Ay/Az/Ayz [cm2]	Iy/Iz/Iyz [cm4]	ys/zs [mm]	modules [N/mm2]	gam [kN/m]
1	1069.60	607.50	903669.7	0.0	210000	8.40
	6270.0	288.17	398580.9	400.0	80769	

Additional static properties of cross section

Alfa-T [1/°K]	ymin ymax [mm]	zmin zmax [mm]	hymin hzmin [mm]	AK AB [cm2]	MB	Tau-T Tau-B [1/m3]	Tau-Vy Tau-Vz [1/m2]
1.2E-05	-405.0	-350.0		5.910E+02		6.508E+02	2.058E+01
	405.0	350.0				1.189E+02	3.134E+01

SOFiSTiK AG - www.sofistik.de

Composite bridge 38+50+38, b=14.25m, 2x2HL1100R HISTAR460 , slab 0.30m C30/37

Section values for warping

Wmin[cm2]	Wmax[cm2]	CM[cm6]	CMS[cm4]	ASwyy[cm6]	ASwzz[cm6]	ry[mm]	rz[mm]
-1326.38	1326.38	427502762.	651581.6	-3.01	-6.82	0.0	0.0

Design values of cross section

Mat NoR	A[cm2] It[cm4]	Ay/Az/Ayz [cm2]	Iy/Iz/Iyz [cm4]	ys/zs [mm]	modules [N/mm2]	gam [kN/m]
1	1069.60	607.50	903669.7	0.0	182609	8.40
	6270.0	288.17	398580.9	400.0	70234	

Design forces and moments
(C/E = characteristic plastic/elastic, D=plast.Design, F=elast. Design)

	N[kN]	Vy[kN]	Vz[kN]	Mt[kNm]	My[kNm]	Mz[kNm]	y[mm]	z[mm]	BUCK
C	35831.6	14099.76	6587.62	488.52	9866.45	5093.69	0.0	400.0	c d
C	0.0				0.00	0.00	0.0	0.0	COMB
E	35831.6	9399.84	6171.79	297.21	8649.41	3296.90	0.0	400.0	
D	31157.9	12260.66	5728.37	424.80	8579.52	4429.29	0.0	400.0	
D	0.0				0.00	0.00	0.0	0.0	COMB
F	31157.9	8173.78	5366.77	258.44	7521.22	2866.87	0.0	400.0	

Additional Design Data

M	periphery-O/-I [m2/m]	[m2/m]	deff [mm]	t-min [mm]	t-max [mm]	SMP [o/o]	thet-p [tm2/m]	thet-y [tm2/m]	thet-z [tm2/m]	thet-yz [tm2/m]
	4.550		47.0	45.0	52.0	0.0	0.102	0.071	0.031	

Cross section No. 251.2 = CS 10 - prefab. slab C1

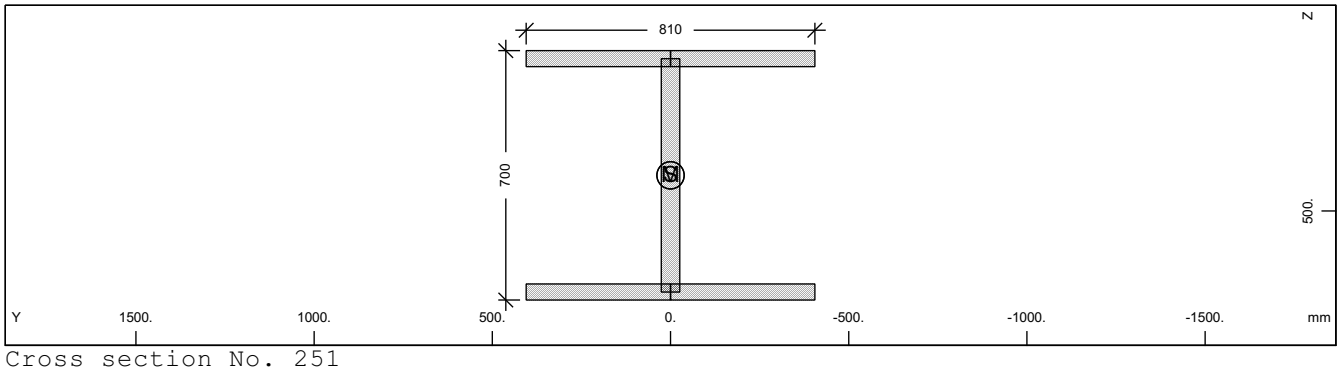

Cross section No. 251

Static properties of cross section

Mat NoR	A[cm2] It[cm4]	Ay/Az/Ayz [cm2]	Iy/Iz/Iyz [cm4]	ys/zs [mm]	modules [N/mm2]	gam [kN/m]
1	1069.60	607.50	903669.7	0.0	210000	8.40
	6270.0	288.17	398580.9	400.0	80769	

Additional static properties of cross section

Alfa-T [1/°K]	ymin ymax [mm]	zmin zmax [mm]	hymin hzmin [mm]	AK AB [cm2]	MB	Tau-T Tau-B [1/m3]	Tau-Vy Tau-Vz [1/m2]
1.2E-05	-405.0	-350.0		5.910E+02		6.508E+02	2.058E+01
	405.0	350.0				1.189E+02	3.134E+01

Section values for warping

Wmin[cm2]	Wmax[cm2]	CM[cm6]	CMS[cm4]	ASwyy[cm6]	ASwzz[cm6]	ry[mm]	rz[mm]
-1326.38	1326.38	427502762.	651581.6	-3.01	-6.82	0.0	0.0

Design values of cross section

Mat NoR	A[cm2] It[cm4]	Ay/Az/Ayz [cm2]	Iy/Iz/Iyz [cm4]	ys/zs [mm]	modules [N/mm2]	gam [kN/m]
1	1069.60	607.50	903669.7	0.0	182609	8.40
	6270.0	288.17	398580.9	400.0	70234	

SOFiSTiK AG - www.sofistik.de

Composite bridge 38+50+38, b=14.25m, 2x2HL1100R HISTAR460 , slab 0.30m C30/37

Design forces and moments
(C/E = characteristic plastic/elastic, D=plast.Design, F=elast. Design)

	N[kN]	Vy[kN]	Vz[kN]	Mt[kNm]	My[kNm]	Mz[kNm]	y[mm]	z[mm]	BUCK
C	35831.6	14099.76	6587.62	488.52	9866.45	5093.69	0.0	400.0	c d
C	0.0				0.00	0.00	0.0	0.0	COMB
E	35831.6	9399.84	6171.79	297.21	8649.41	3296.90	0.0	400.0	
D	31157.9	12260.66	5728.37	424.80	8579.52	4429.29	0.0	400.0	
D	0.0				0.00	0.00	0.0	0.0	COMB
F	31157.9	8173.78	5366.77	258.44	7521.22	2866.87	0.0	400.0	

Additional Design Data

M	periphery-O/-I [m2/m]	[m2/m]	deff [mm]	t-min [mm]	t-max [mm]	SMP [o/o]	thet-p [tm2/m]	thet-y [tm2/m]	thet-z [tm2/m]	thet-yz [tm2/m]
	4.550		47.0	45.0	52.0	0.0	0.102	0.071	0.031	

Cross section No. 251.3 = CS 20 - in-situ conc:C2

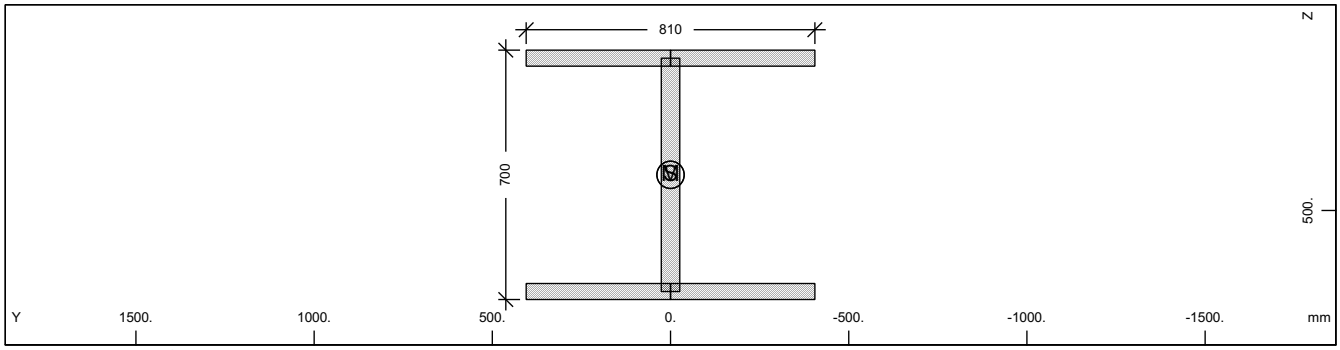

Cross section No. 251

Static properties of cross section

Mat NoR	A[cm2] It[cm4]	Ay/Az/Ayz [cm2]	Iy/Iz/Iyz [cm4]	ys/zs [mm]	modules [N/mm2]	gam [kN/m]
1	1069.60	607.50	903669.7	0.0	210000	8.40
	6270.0	288.17	398580.9	400.0	80769	

Additional static properties of cross section

Alfa-T [1/°K]	ymin ymax [mm]	zmin zmax [mm]	hymin hzmin [mm]	AK AB [cm2]	MB	Tau-T Tau-B [1/m3]	Tau-Vy Tau-Vz [1/m2]
1.2E-05	-405.0	-350.0		5.910E+02		6.508E+02	2.058E+01
	405.0	350.0				1.189E+02	3.134E+01

Section values for warping

Wmin[cm2]	Wmax[cm2]	CM[cm6]	CMS[cm4]	ASwyy[cm6]	ASwzz[cm6]	ry[mm]	rz[mm]
-1326.38	1326.38	427502762.	651581.6	-3.01	-6.82	0.0	0.0

Design values of cross section

Mat NoR	A[cm2] It[cm4]	Ay/Az/Ayz [cm2]	Iy/Iz/Iyz [cm4]	ys/zs [mm]	modules [N/mm2]	gam [kN/m]
1	1069.60	607.50	903669.7	0.0	182609	8.40
	6270.0	288.17	398580.9	400.0	70234	

Design forces and moments
(C/E = characteristic plastic/elastic, D=plast.Design, F=elast. Design)

	N[kN]	Vy[kN]	Vz[kN]	Mt[kNm]	My[kNm]	Mz[kNm]	y[mm]	z[mm]	BUCK
C	35831.6	14099.76	6587.62	488.52	9866.45	5093.69	0.0	400.0	c d
C	0.0				0.00	0.00	0.0	0.0	COMB
E	35831.6	9399.84	6171.79	297.21	8649.41	3296.90	0.0	400.0	
D	31157.9	12260.66	5728.37	424.80	8579.52	4429.29	0.0	400.0	
D	0.0				0.00	0.00	0.0	0.0	COMB
F	31157.9	8173.78	5366.77	258.44	7521.22	2866.87	0.0	400.0	

SOFiSTiK AG - www.sofistik.de

Composite bridge 38+50+38, b=14.25m, 2x2HL1100R HISTAR460 , slab 0.30m C30/37

Additional Design Data

M	periphery-O/-I [m2/m]	[m2/m]	deff [mm]	t-min [mm]	t-max [mm]	SMP [o/o]	thet-p [tm2/m]	thet-y [tm2/m]	thet-z [tm2/m]	thet-yz [tm2/m]
	4.550		47.0	45.0	52.0	0.0	0.102	0.071	0.031	

Cross section No. 251.4 = CS 21 - reinf active:C2

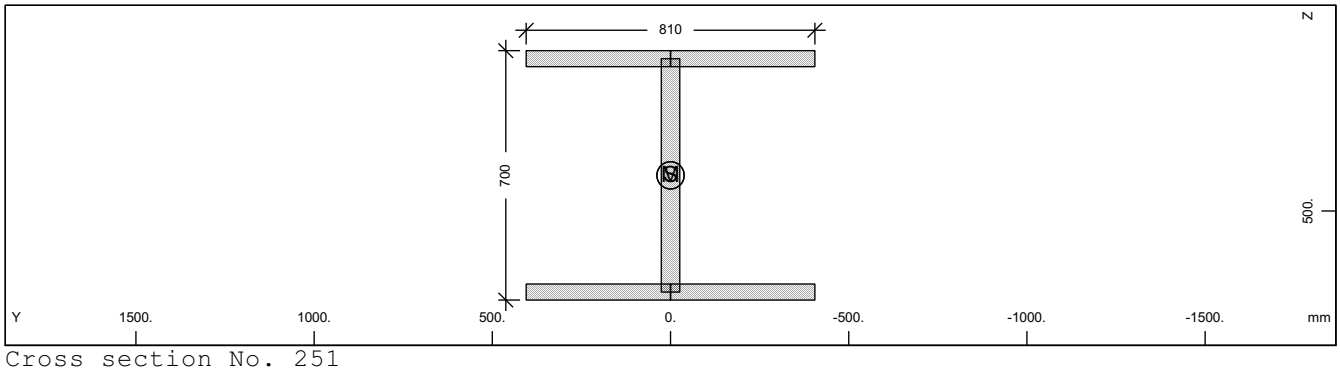

Cross section No. 251

Static properties of cross section

Mat NoR	A[cm2] It[cm4]	Ay/Az/Ayz [cm2]	Iy/Iz/Iyz [cm4]	ys/zs [mm]	modules [N/mm2]	gam [kN/m]
1	1069.60	607.50	903669.7	0.0	210000	8.40
	6270.0	288.17	398580.9	400.0	80769	

Additional static properties of cross section

Alfa-T [1/°K]	ymin ymax [mm]	zmin zmax [mm]	hymin hzmin [mm]	AK AB [cm2]	MB	Tau-T Tau-B [1/m3]	Tau-Vy Tau-Vz [1/m2]
1.2E-05	-405.0	-350.0		5.910E+02		6.508E+02	2.058E+01
	405.0	350.0				1.189E+02	3.134E+01

Section values for warping

Wmin[cm2]	Wmax[cm2]	CM[cm6]	CMS[cm4]	ASwyy[cm6]	ASwzz[cm6]	ry[mm]	rz[mm]
-1326.38	1326.38	427502762.	651581.6	-3.01	-6.82	0.0	0.0

Design values of cross section

Mat NoR	A[cm2] It[cm4]	Ay/Az/Ayz [cm2]	Iy/Iz/Iyz [cm4]	ys/zs [mm]	modules [N/mm2]	gam [kN/m]
1	1069.60	607.50	903669.7	0.0	182609	8.40
	6270.0	288.17	398580.9	400.0	70234	

Design forces and moments
(C/E = characteristic plastic/elastic, D=plast.Design, F=elast. Design)

	N[kN]	Vy[kN]	Vz[kN]	Mt[kNm]	My[kNm]	Mz[kNm]	y[mm]	z[mm]	BUCK
C	35831.6	14099.76	6587.62	488.52	9866.45	5093.69	0.0	400.0	c d
C	0.0				0.00	0.00	0.0	0.0	COMB
E	35831.6	9399.84	6171.79	297.21	8649.41	3296.90	0.0	400.0	
D	31157.9	12260.66	5728.37	424.80	8579.52	4429.29	0.0	400.0	
D	0.0				0.00	0.00	0.0	0.0	COMB
F	31157.9	8173.78	5366.77	258.44	7521.22	2866.87	0.0	400.0	

Additional Design Data

M	periphery-O/-I [m2/m]	[m2/m]	deff [mm]	t-min [mm]	t-max [mm]	SMP [o/o]	thet-p [tm2/m]	thet-y [tm2/m]	thet-z [tm2/m]	thet-yz [tm2/m]
	4.550		47.0	45.0	52.0	0.0	0.102	0.071	0.031	

SOFiSTiK AG - www.sofistik.de

Composite bridge 38+50+38, b=14.25m, 2x2HL1100R HISTAR460 , slab 0.30m C30/37

Cross section No. 251.5 = CS 30 - in-situ conc:C3

Cross section No. 252 - VFT

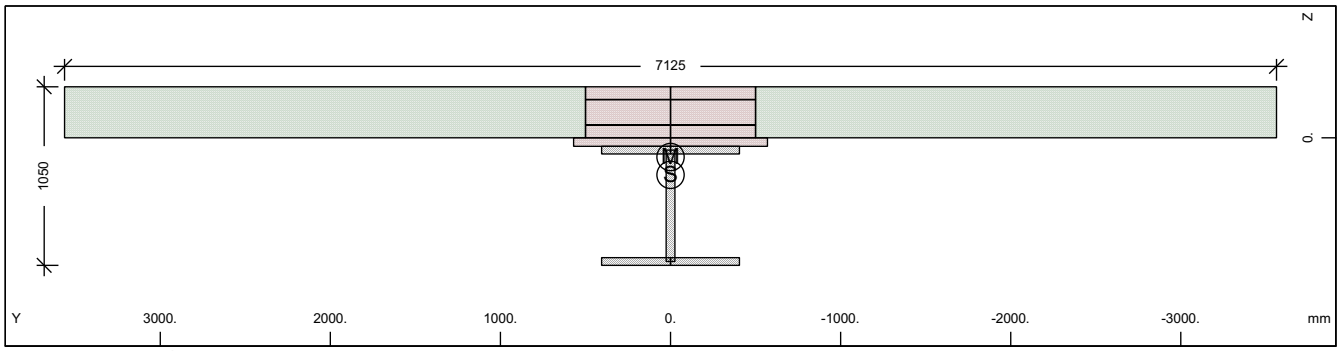

Cross section No. 252 - VFT

Static properties of cross section

Mat NoR	A[cm2] It[cm4]	Ay/Az/Ayz [cm2]	Iy/Iz/Iyz [cm4]	ys/zs [mm]	y/z-sc [mm]	modules [N/mm2]	gam [kN/m]
1	1642.18	1074.80	1946674.3	0.0	0.0	210000	63.26
	6270.0	462.67	897984.0	217.7	112.9	80769	

Additional static properties of cross section

Alfa-T [1/°K]	ymin ymax [mm]	zmin zmax [mm]	hymin hzmin [mm]	AK AB [cm2]	MB	Tau-T Tau-B [1/m3]	Tau-Vy Tau-Vz [1/m2]
1.2E-05	-3562.5	-517.7		2.115E+03		3.225E+01	1.326E+01
	3562.5	532.3		2.195E+04		1.189E+02	2.503E+01

Section values for warping

Wmin[cm2]	Wmax[cm2]	CM[cm6]	CMS[cm4]	ASwyy[cm6]	ASwzz[cm6]	ry[mm]	rz[mm]
-9367.06	9367.06	1042624125.	1423880.6	2.35	5.10	0.0	321.1

Partial cross sections

Mat NoR	A[cm2] It[cm4]	Ay/Az/Ayz [cm2]	Iy/Iz/Iyz [cm4]	ys/zs [mm]	modules [N/mm2]	gam [kN/m]
1	1069.60	374.63	903669.7	0.0	210000	8.40
	7990.7	428.98	398580.9	400.0	80769	
30	3570.00	4030.92	146691.2	0.0	32837	8.93
	904750.1	193.18	3117310.1	-122.1	13682	
31	18375.00	41481168.	0.0	0.0	0	45.94
	5512501.0	37388.97901762872.		-150.0	0	
300	15.07	17.99	847.8	0.0	200000	0.00
	0.0	1.01	12560.0	-150.0	76923	

Design values of cross section

Mat NoR	A[cm2] It[cm4]	Ay/Az/Ayz [cm2]	Iy/Iz/Iyz [cm4]	ys/zs [mm]	modules [N/mm2]	gam [kN/m]
1	1511.92	915.42	1777982.7	0.0	182609	63.26
	6270.0	455.03	784247.7	247.0	70234	

Design forces and moments
(C/E = characteristic plastic/elastic, D=plast.Design, F=elast. Design)

	N[kN]	Vy[kN]	Vz[kN]	Mt[kNm]	My[kNm]	Mz[kNm]	y[mm]	z[mm]	BUCK
C	36585.2	50744.10	35388.07	99055.71	22135.36	59290.14	297.4	-132.	c c
C	-60238.3				34632.55	0.00	0.0	217.7	COMB
C	-32917.5				0.00	62637.10	0.0	0.0	COMB
C	-102420.	50744.10	35388.07	99055.72	-10272.8	-59290.1	-297.	378.2	
C	-5596.7				-10722.3	0.00	0.0	217.7	COMB
C	-32917.5				0.00	-62637.1	0.0	0.0	COMB
E	55012.9	5833.03	7727.07	523.56	7213.94	3022.57	0.0	217.7	
E	-31506.7	5833.03	7727.07	523.56	-12252.0	-3022.57	0.0	217.7	
D	31813.2	36778.50	25464.89	66149.80	18453.32	41510.95	197.9	-81.3	

SOFiSTiK AG - www.sofistik.de

Composite bridge 38+50+38, b=14.25m, 2x2HL1100R HISTAR460 , slab 0.30m C30/37

Design forces and moments
(C/E = characteristic plastic/elastic, D=plast.Design, F=elast. Design)

	N[kN]	Vy[kN]	Vz[kN]	Mt[kNm]	My[kNm]	Mz[kNm]	y[mm]	z[mm]	BUCK
D	-39023.3				25263.91	0.00	0.0	217.7	COMB
D	-21945.0				0.00	42829.79	0.0	0.0	COMB
D	-75703.2	36778.50	25464.89	66149.80	-8932.85	-41511.0	-198.	378.3	
D	-4866.7				-9323.74	0.00	0.0	217.7	COMB
D	-21945.0				0.00	-42829.8	0.0	0.0	COMB
F	47837.3	3888.69	6719.19	349.04	4809.30	2015.05	0.0	217.7	
F	-21004.4	3888.69	6719.19	349.04	-10653.9	-2015.05	0.0	217.7	

Additional Design Data

M	periphery-O/-I [m2/m]	[m2/m]	deff [mm]	t-min [mm]	t-max [mm]	SMP [o/o]	thet-p [tm2/m]	thet-y [tm2/m]	thet-z [tm2/m]	thet-yz [tm2/m]
	25.080		13.1	0.8	300.0	0.0	22.945	0.292	22.653	
1	4.550		47.0	45.0	52.0	0.0	0.102	0.071	0.031	
30	4.280		600.0	50.0	300.0	0.0	0.082	0.004	0.078	
31	12.250		300.0	300.0	300.0	0.0	22.544		22.544	
**	4.000		0.8	0.8	0.8	0.0	0.000	0.000	0.000	

Cross section No. 252.1 = CS 1 - steel alone

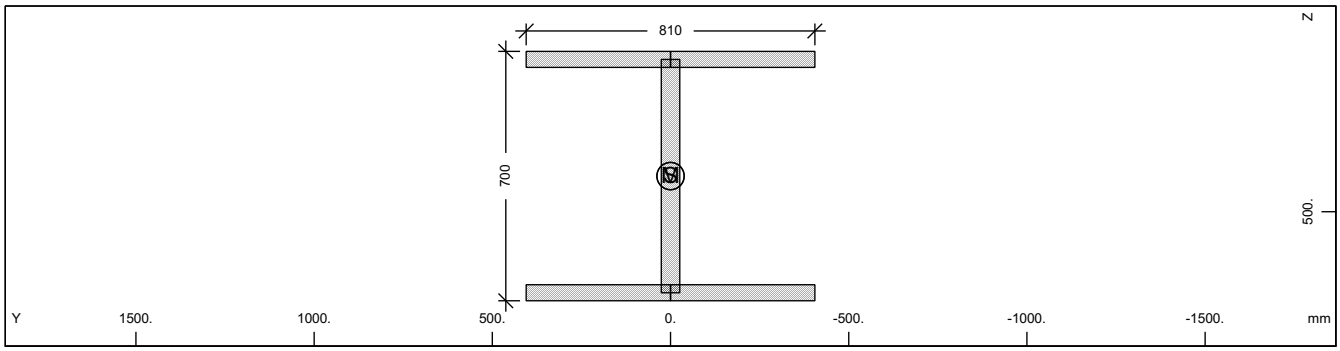

Cross section No. 252

Static properties of cross section

Mat NoR	A[cm2] It[cm4]	Ay/Az/Ayz [cm2]	Iy/Iz/Iyz [cm4]	ys/zs [mm]	modules [N/mm2]	gam [kN/m]
1	1069.60	607.50	903669.7	0.0	210000	8.40
	6270.0	288.17	398580.9	400.0	80769	

Additional static properties of cross section

Alfa-T [1/°K]	ymin ymax [mm]	zmin zmax [mm]	hymin hzmin [mm]	AK AB [cm2]	MB	Tau-T Tau-B [1/m3]	Tau-Vy Tau-Vz [1/m2]
1.2E-05	-405.0	-350.0		5.910E+02		6.508E+02	2.058E+01
	405.0	350.0				1.189E+02	3.134E+01

Section values for warping

Wmin[cm2]	Wmax[cm2]	CM[cm6]	CMS[cm4]	ASwyy[cm6]	ASwzz[cm6]	ry[mm]	rz[mm]
-1326.38	1326.38	427502762.	651581.6	-3.01	-6.82	0.0	0.0

Design values of cross section

Mat NoR	A[cm2] It[cm4]	Ay/Az/Ayz [cm2]	Iy/Iz/Iyz [cm4]	ys/zs [mm]	modules [N/mm2]	gam [kN/m]
1	1069.60	607.50	903669.7	0.0	182609	8.40
	6270.0	288.17	398580.9	400.0	70234	

Design forces and moments
(C/E = characteristic plastic/elastic, D=plast.Design, F=elast. Design)

	N[kN]	Vy[kN]	Vz[kN]	Mt[kNm]	My[kNm]	Mz[kNm]	y[mm]	z[mm]	BUCK
C	35831.6	14099.76	6587.62	488.52	9866.45	5093.69	0.0	400.0	c d
C	0.0				0.00	0.00	0.0	0.0	COMB
E	35831.6	9399.84	6171.79	297.21	8649.41	3296.90	0.0	400.0	
D	31157.9	12260.66	5728.37	424.80	8579.52	4429.29	0.0	400.0	

SOFiSTiK AG - www.sofistik.de

Composite bridge 38+50+38, b=14.25m, 2x2HL1100R HISTAR460 , slab 0.30m C30/37

Design forces and moments
(C/E = characteristic plastic/elastic, D=plast.Design, F=elast. Design)

	N[kN]	Vy[kN]	Vz[kN]	Mt[kNm]	My[kNm]	Mz[kNm]	y[mm]	z[mm]	BUCK
D	0.0				0.00	0.00	0.0	0.0	COMB
F	31157.9	8173.78	5366.77	258.44	7521.22	2866.87	0.0	400.0	

Additional Design Data

M	periphery-O/-I [m2/m]	[m2/m]	deff [mm]	t-min [mm]	t-max [mm]	SMP [o/o]	thet-p [tm2/m]	thet-y [tm2/m]	thet-z [tm2/m]	thet-yz [tm2/m]
	4.550		47.0	45.0	52.0	0.0	0.102	0.071	0.031	

Cross section No. 252.2 = CS 10 - prefab. slab C1

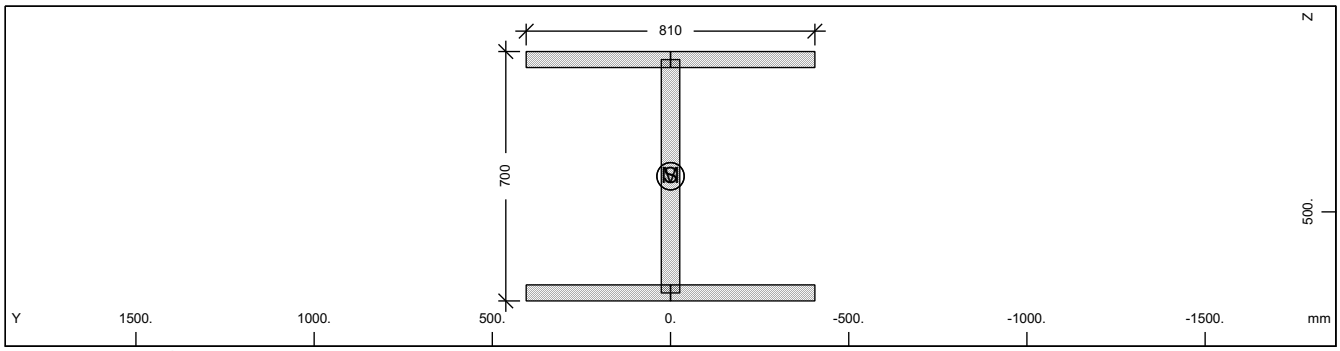

Cross section No. 252

Static properties of cross section

Mat NoR	A[cm2] It[cm4]	Ay/Az/Ayz [cm2]	Iy/Iz/Iyz [cm4]	ys/zs [mm]	modules [N/mm2]	gam [kN/m]
1	1069.60	607.50	903669.7	0.0	210000	8.40
	6270.0	288.17	398580.9	400.0	80769	

Additional static properties of cross section

Alfa-T [1/°K]	ymin ymax [mm]	zmin zmax [mm]	hymin hzmin [mm]	AK AB [cm2]	MB	Tau-T Tau-B [1/m3]	Tau-Vy Tau-Vz [1/m2]
1.2E-05	-405.0	-350.0		5.910E+02		6.508E+02	2.058E+01
	405.0	350.0				1.189E+02	3.134E+01

Section values for warping

Wmin[cm2]	Wmax[cm2]	CM[cm6]	CMS[cm4]	ASwyy[cm6]	ASwzz[cm6]	ry[mm]	rz[mm]
-1326.38	1326.38	427502762.	651581.6	-3.01	-6.82	0.0	0.0

Design values of cross section

Mat NoR	A[cm2] It[cm4]	Ay/Az/Ayz [cm2]	Iy/Iz/Iyz [cm4]	ys/zs [mm]	modules [N/mm2]	gam [kN/m]
1	1069.60	607.50	903669.7	0.0	182609	8.40
	6270.0	288.17	398580.9	400.0	70234	

Design forces and moments
(C/E = characteristic plastic/elastic, D=plast.Design, F=elast. Design)

	N[kN]	Vy[kN]	Vz[kN]	Mt[kNm]	My[kNm]	Mz[kNm]	y[mm]	z[mm]	BUCK
C	35831.6	14099.76	6587.62	488.52	9866.45	5093.69	0.0	400.0	c d
C	0.0				0.00	0.00	0.0	0.0	COMB
E	35831.6	9399.84	6171.79	297.21	8649.41	3296.90	0.0	400.0	
D	31157.9	12260.66	5728.37	424.80	8579.52	4429.29	0.0	400.0	
D	0.0				0.00	0.00	0.0	0.0	COMB
F	31157.9	8173.78	5366.77	258.44	7521.22	2866.87	0.0	400.0	

Additional Design Data

M	periphery-O/-I [m2/m]	[m2/m]	deff [mm]	t-min [mm]	t-max [mm]	SMP [o/o]	thet-p [tm2/m]	thet-y [tm2/m]	thet-z [tm2/m]	thet-yz [tm2/m]
	4.550		47.0	45.0	52.0	0.0	0.102	0.071	0.031	

SOFiSTiK AG - www.sofistik.de

Composite bridge 38+50+38, b=14.25m, 2x2HL1100R HISTAR460 , slab 0.30m C30/37

Cross section No. 252.3 = CS 20 - in-situ conc:C2

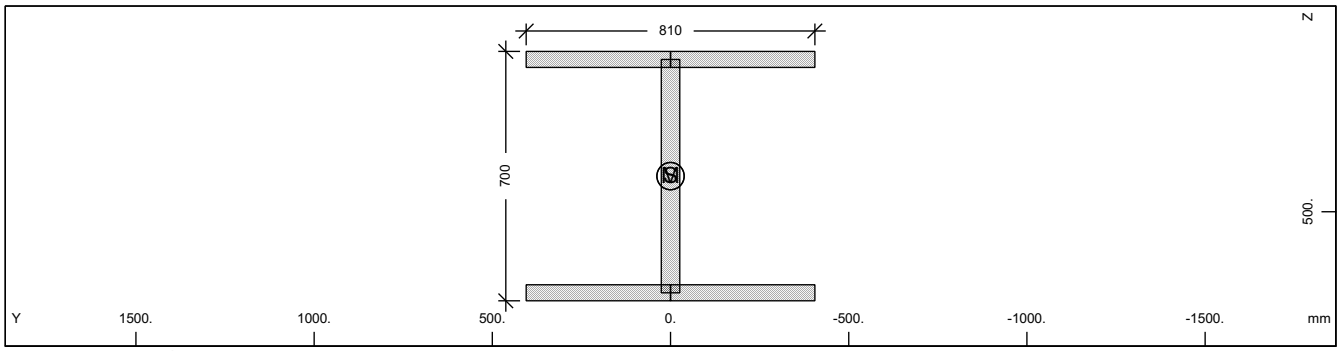

Cross section No. 252

Static properties of cross section

Mat NoR	A[cm2] It[cm4]	Ay/Az/Ayz [cm2]	Iy/Iz/Iyz [cm4]	ys/zs [mm]	modules [N/mm2]	gam [kN/m]
1	1069.60	607.50	903669.7	0.0	210000	8.40
	6270.0	288.17	398580.9	400.0	80769	

Additional static properties of cross section

Alfa-T [1/°K]	ymin ymax [mm]	zmin zmax [mm]	hymin hzmin [mm]	AK AB [cm2]	MB	Tau-T Tau-B [1/m3]	Tau-Vy Tau-Vz [1/m2]
1.2E-05	-405.0	-350.0		5.910E+02		6.508E+02	2.058E+01
	405.0	350.0				1.189E+02	3.134E+01

Section values for warping

Wmin[cm2]	Wmax[cm2]	CM[cm6]	CMS[cm4]	ASwyy[cm6]	ASwzz[cm6]	ry[mm]	rz[mm]
-1326.38	1326.38	427502762.	651581.6	-3.01	-6.82	0.0	0.0

Design values of cross section

Mat NoR	A[cm2] It[cm4]	Ay/Az/Ayz [cm2]	Iy/Iz/Iyz [cm4]	ys/zs [mm]	modules [N/mm2]	gam [kN/m]
1	1069.60	607.50	903669.7	0.0	182609	8.40
	6270.0	288.17	398580.9	400.0	70234	

Design forces and moments
(C/E = characteristic plastic/elastic, D=plast.Design, F=elast. Design)

	N[kN]	Vy[kN]	Vz[kN]	Mt[kNm]	My[kNm]	Mz[kNm]	y[mm]	z[mm]	BUCK
C	35831.6	14099.76	6587.62	488.52	9866.45	5093.69	0.0	400.0	c d
C	0.0				0.00	0.00	0.0	0.0	COMB
E	35831.6	9399.84	6171.79	297.21	8649.41	3296.90	0.0	400.0	
D	31157.9	12260.66	5728.37	424.80	8579.52	4429.29	0.0	400.0	
D	0.0				0.00	0.00	0.0	0.0	COMB
F	31157.9	8173.78	5366.77	258.44	7521.22	2866.87	0.0	400.0	

Additional Design Data

M	periphery-O/-I [m2/m] [m2/m]	deff [mm]	t-min [mm]	t-max [mm]	SMP [o/o]	thet-p [tm2/m]	thet-y [tm2/m]	thet-z [tm2/m]	thet-yz [tm2/m]
	4.550	47.0	45.0	52.0	0.0	0.102	0.071	0.031	

SOFiSTiK AG - www.sofistik.de

Composite bridge 38+50+38, b=14.25m, 2x2HL1100R HISTAR460 , slab 0.30m C30/37

Cross section No. 252.4 = CS 21 - reinf active:C2

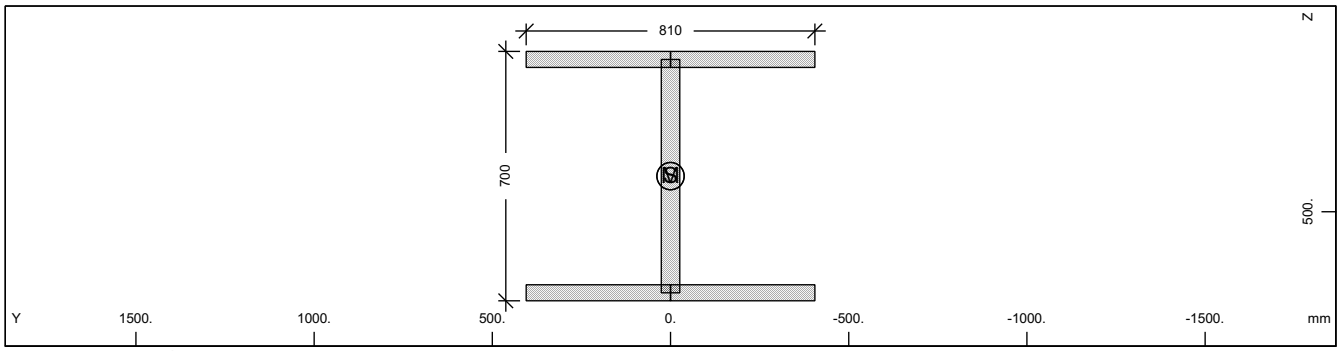

Cross section No. 252

Static properties of cross section

Mat NoR	A[cm2] It[cm4]	Ay/Az/Ayz [cm2]	Iy/Iz/Iyz [cm4]	ys/zs [mm]	modules [N/mm2]	gam [kN/m]
1	1069.60	607.50	903669.7	0.0	210000	8.40
	6270.0	288.17	398580.9	400.0	80769	

Additional static properties of cross section

Alfa-T [1/°K]	ymin ymax [mm]	zmin zmax [mm]	hymin hzmin [mm]	AK AB [cm2]	MB	Tau-T Tau-B [1/m3]	Tau-Vy Tau-Vz [1/m2]
1.2E-05	-405.0	-350.0		5.910E+02		6.508E+02	2.058E+01
	405.0	350.0				1.189E+02	3.134E+01

Section values for warping

Wmin[cm2]	Wmax[cm2]	CM[cm6]	CMS[cm4]	ASwyy[cm6]	ASwzz[cm6]	ry[mm]	rz[mm]
-1326.38	1326.38	427502762.	651581.6	-3.01	-6.82	0.0	0.0

Design values of cross section

Mat NoR	A[cm2] It[cm4]	Ay/Az/Ayz [cm2]	Iy/Iz/Iyz [cm4]	ys/zs [mm]	modules [N/mm2]	gam [kN/m]
1	1069.60	607.50	903669.7	0.0	182609	8.40
	6270.0	288.17	398580.9	400.0	70234	

Design forces and moments
(C/E = characteristic plastic/elastic, D=plast.Design, F=elast. Design)

	N[kN]	Vy[kN]	Vz[kN]	Mt[kNm]	My[kNm]	Mz[kNm]	y[mm]	z[mm]	BUCK
C	35831.6	14099.76	6587.62	488.52	9866.45	5093.69	0.0	400.0	c d
C	0.0				0.00	0.00	0.0	0.0	COMB
E	35831.6	9399.84	6171.79	297.21	8649.41	3296.90	0.0	400.0	
D	31157.9	12260.66	5728.37	424.80	8579.52	4429.29	0.0	400.0	
D	0.0				0.00	0.00	0.0	0.0	COMB
F	31157.9	8173.78	5366.77	258.44	7521.22	2866.87	0.0	400.0	

Additional Design Data

M	periphery-O/-I [m2/m] [m2/m]	deff [mm]	t-min [mm]	t-max [mm]	SMP [o/o]	thet-p [tm2/m]	thet-y [tm2/m]	thet-z [tm2/m]	thet-yz [tm2/m]
	4.550	47.0	45.0	52.0	0.0	0.102	0.071	0.031	

SOFiSTiK AG - www.sofistik.de

Composite bridge 38+50+38, b=14.25m, 2x2HL1100R HISTAR460 , slab 0.30m C30/37

Cross section No. 252.5 = CS 30 - in-situ conc:C3

Cross section No. 253 - VFT

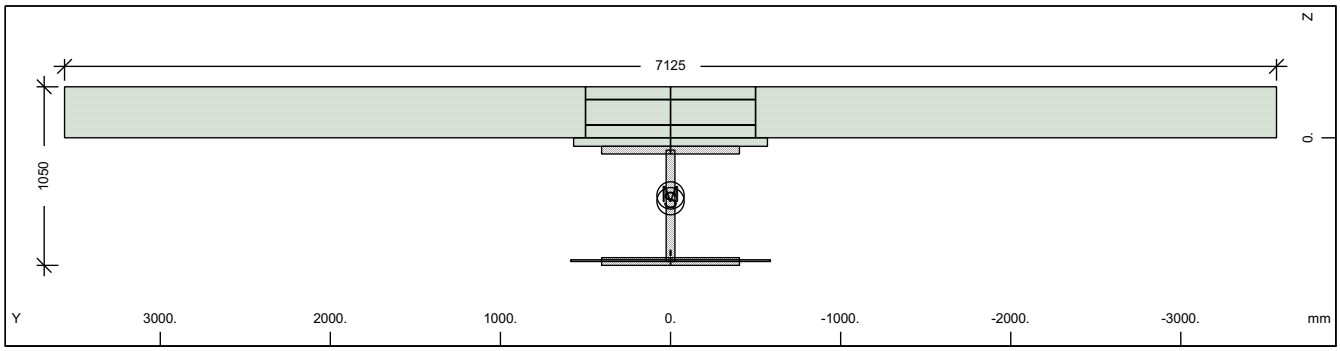

Cross section No. 253 - VFT

Static properties of cross section

Mat NoR	A[cm2] It[cm4]	Ay/Az/Ayz [cm2]	Iy/Iz/Iyz [cm4]	ys/zs [mm]	y/z-sc [mm]	modules [N/mm2]	gam [kN/m]
1	1135.99	645.43	1086280.2	0.0	0.0	210000	63.55
	6270.0	327.35	448426.4	372.9	338.9	80769	

Additional static properties of cross section

Alfa-T [1/°K]	ymin ymax [mm]	zmin zmax [mm]	hymin hzmin [mm]	AK AB [cm2]	MB	Tau-T Tau-B [1/m3]	Tau-Vy Tau-Vz [1/m2]
1.2E-05	-3562.5	-672.9		9.935E+01		1.715E+02	2.655E+01
	3562.5	377.1		2.206E+04		1.189E+02	2.907E+01

Section values for warping

Wmin[cm2]	Wmax[cm2]	CM[cm6]	CMS[cm4]	ASwyy[cm6]	ASwzz[cm6]	ry[mm]	rz[mm]
-17415.78	17415.78	564328746.	771743.0	0.60	1.46	0.0	40.8

Partial cross sections

Mat NoR	A[cm2] It[cm4]	Ay/Az/Ayz [cm2]	Iy/Iz/Iyz [cm4]	ys/zs [mm]	modules [N/mm2]	gam [kN/m]
1	1069.60	541.76	903669.7	0.0	210000	8.40
	7990.7	313.84	398580.9	400.0	80769	
25	117.40		9.8	0.0	10667	0.29
	539368.1	0.00	0.0	722.5	4444	
210	0.64	0.00	0.0	0.0	200000	0.00
	2.2	0.00	0.0	677.5	76923	
31	21945.00	81034377.	170028.4	0.0	0	54.86
	6417251.4	191356.89	904880243.	-145.5	0	
300	62.80	108.42	3532.5	0.0	200000	0.00
	2.1	14.01	52333.3	-150.0	76923	

Design values of cross section

Mat NoR	A[cm2] It[cm4]	Ay/Az/Ayz [cm2]	Iy/Iz/Iyz [cm4]	ys/zs [mm]	modules [N/mm2]	gam [kN/m]
1	1134.59	645.34	1084577.3	0.0	182609	63.55
	6270.0	327.18	448425.4	372.5	70234	

Design forces and moments
(C/E = characteristic plastic/elastic, D=plast.Design, F=elast. Design)

	N[kN]	Vy[kN]	Vz[kN]	Mt[kNm]	My[kNm]	Mz[kNm]	y[mm]	z[mm]	BUCK
C	39003.8	52140.45	36043.66	99179.80	22340.65	60206.52	279.8	-131.	c c
C	-68069.4				45787.38	0.00	0.0	372.9	COMB
C	-33093.6				0.00	63285.64	0.0	0.0	COMB
C	262309.1	52140.45	36043.66	99179.79	-11470.1	-60108.0	-280.	319.4	
C	1882.2				-11539.4	0.00	0.0	372.9	COMB
C	-33093.6				0.00	-63285.6	0.0	0.0	COMB
E	38055.5	10575.36	6652.62	96.23	9538.58	3709.21	0.0	372.9	

SOFiSTiK AG - www.sofistik.de

Composite bridge 38+50+38, b=14.25m, 2x2HL1100R HISTAR460 , slab 0.30m C30/37

Design forces and moments
(C/E = characteristic plastic/elastic, D=plast.Design, F=elast. Design)

	N[kN]	Vy[kN]	Vz[kN]	Mt[kNm]	My[kNm]	Mz[kNm]	y[mm]	z[mm]	BUCK
E	-38055.5	10575.36	6652.62	96.23	-9538.58	-3709.21	0.0	372.9	
D	33916.3	37992.72	25995.66	66234.62	18630.17	42170.82	186.1	-81.2	
D	-45818.5				32864.53	0.00	0.0	372.9	COMB
D	-22062.4				0.00	43383.25	0.0	0.0	COMB
D	166958.9	37992.72	25995.66	66234.62	-9972.46	-42127.1	-186.	317.5	
D	1693.7				-10032.5	0.00	0.0	372.9	COMB
D	-22062.4				0.00	-43383.3	0.0	0.0	COMB
F	33091.7	9195.97	5784.89	64.15	8294.41	3225.40	0.0	372.9	
F	-33091.7	9195.97	5784.89	64.15	-8294.41	-3225.40	0.0	372.9	

Additional Design Data

M	periphery-O/-I [m2/m]	[m2/m]	deff [mm]	t-min [mm]	t-max [mm]	SMP [o/o]	thet-p [tm2/m]	thet-y [tm2/m]	thet-z [tm2/m]	thet-yz [tm2/m]
	25.104		9.1	3.1	300.0	0.0	22.964	0.310	22.653	
1	4.550		47.0	45.0	52.0	0.0	0.102	0.071	0.031	
25	0.020		1174.0			0.0	0.000	0.000		
**	0.004		32.0			0.0	0.000		0.000	
31	16.530		265.5	50.0	300.0	0.0	22.626	0.004	22.622	
**	4.000		3.1	3.1	3.1	0.0	0.000	0.000	0.000	

Cross section No. 253.1 = CS 1 - steel alone

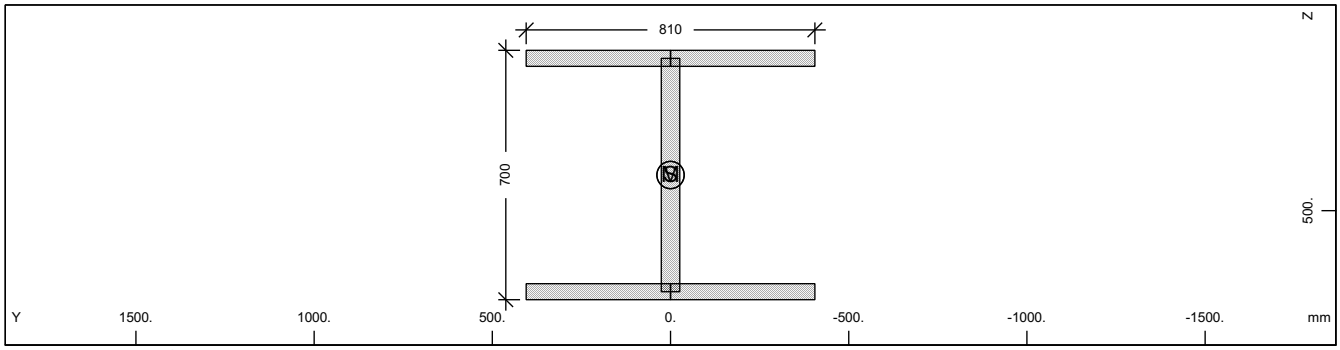

Cross section No. 253

Static properties of cross section

Mat NoR	A[cm2] It[cm4]	Ay/Az/Ayz [cm2]	Iy/Iz/Iyz [cm4]	ys/zs [mm]	modules [N/mm2]	gam [kN/m]
1	1069.60	607.50	903669.7	0.0	210000	8.40
	6270.0	288.17	398580.9	400.0	80769	

Additional static properties of cross section

Alfa-T [1/°K]	ymin ymax [mm]	zmin zmax [mm]	hymin hzmin [mm]	AK AB [cm2]	MB	Tau-T Tau-B [1/m3]	Tau-Vy Tau-Vz [1/m2]
1.2E-05	-405.0	-350.0		5.910E+02		6.508E+02	2.058E+01
	405.0	350.0				1.189E+02	3.134E+01

Section values for warping

Wmin[cm2]	Wmax[cm2]	CM[cm6]	CMS[cm4]	ASwyy[cm6]	ASwzz[cm6]	ry[mm]	rz[mm]
-1326.38	1326.38	427502762.	651581.6	-3.01	-6.82	0.0	0.0

Design values of cross section

Mat NoR	A[cm2] It[cm4]	Ay/Az/Ayz [cm2]	Iy/Iz/Iyz [cm4]	ys/zs [mm]	modules [N/mm2]	gam [kN/m]
1	1069.60	607.50	903669.7	0.0	182609	8.40
	6270.0	288.17	398580.9	400.0	70234	

SOFiSTiK AG - www.sofistik.de

Composite bridge 38+50+38, b=14.25m, 2x2HL1100R HISTAR460 , slab 0.30m C30/37

Design forces and moments
(C/E = characteristic plastic/elastic, D=plast.Design, F=elast. Design)

	N[kN]	Vy[kN]	Vz[kN]	Mt[kNm]	My[kNm]	Mz[kNm]	y[mm]	z[mm]	BUCK
C	35831.6	14099.76	6587.62	488.52	9866.45	5093.69	0.0	400.0	c d
C	0.0				0.00	0.00	0.0	0.0	COMB
E	35831.6	9399.84	6171.79	297.21	8649.41	3296.90	0.0	400.0	
D	31157.9	12260.66	5728.37	424.80	8579.52	4429.29	0.0	400.0	
D	0.0				0.00	0.00	0.0	0.0	COMB
F	31157.9	8173.78	5366.77	258.44	7521.22	2866.87	0.0	400.0	

Additional Design Data

M	periphery-O/-I [m2/m]	[m2/m]	deff [mm]	t-min [mm]	t-max [mm]	SMP [o/o]	thet-p [tm2/m]	thet-y [tm2/m]	thet-z [tm2/m]	thet-yz [tm2/m]
	4.550		47.0	45.0	52.0	0.0	0.102	0.071	0.031	

Cross section No. 253.2 = CS 10 - prefab. slab C1

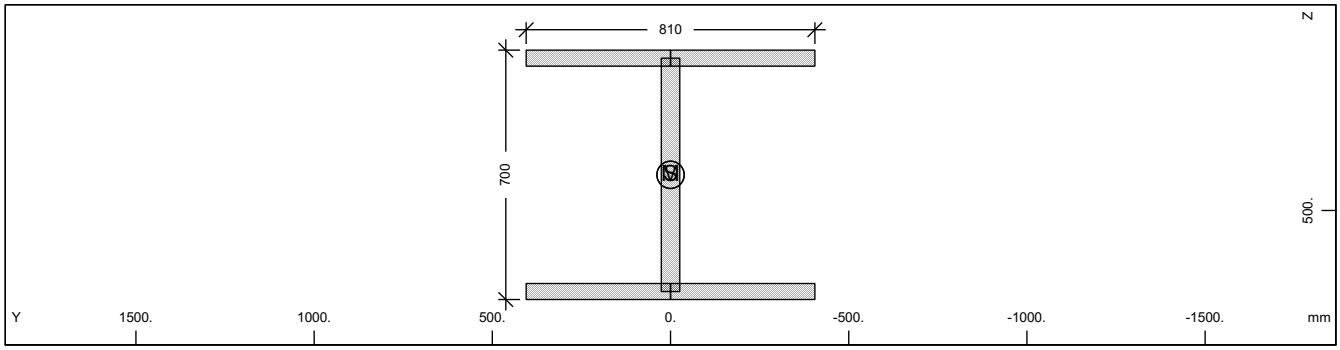

Cross section No. 253

Static properties of cross section

Mat NoR	A[cm2] It[cm4]	Ay/Az/Ayz [cm2]	Iy/Iz/Iyz [cm4]	ys/zs [mm]	modules [N/mm2]	gam [kN/m]
1	1069.60	607.50	903669.7	0.0	210000	8.40
	6270.0	288.17	398580.9	400.0	80769	

Additional static properties of cross section

Alfa-T [1/°K]	ymin ymax [mm]	zmin zmax [mm]	hymin hzmin [mm]	AK AB [cm2]	MB	Tau-T Tau-B [1/m3]	Tau-Vy Tau-Vz [1/m2]
1.2E-05	-405.0	-350.0		5.910E+02		6.508E+02	2.058E+01
	405.0	350.0				1.189E+02	3.134E+01

Section values for warping

Wmin[cm2]	Wmax[cm2]	CM[cm6]	CMS[cm4]	ASwyy[cm6]	ASwzz[cm6]	ry[mm]	rz[mm]
-1326.38	1326.38	427502762.	651581.6	-3.01	-6.82	0.0	0.0

Design values of cross section

Mat NoR	A[cm2] It[cm4]	Ay/Az/Ayz [cm2]	Iy/Iz/Iyz [cm4]	ys/zs [mm]	modules [N/mm2]	gam [kN/m]
1	1069.60	607.50	903669.7	0.0	182609	8.40
	6270.0	288.17	398580.9	400.0	70234	

Design forces and moments
(C/E = characteristic plastic/elastic, D=plast.Design, F=elast. Design)

	N[kN]	Vy[kN]	Vz[kN]	Mt[kNm]	My[kNm]	Mz[kNm]	y[mm]	z[mm]	BUCK
C	35831.6	14099.76	6587.62	488.52	9866.45	5093.69	0.0	400.0	c d
C	0.0				0.00	0.00	0.0	0.0	COMB
E	35831.6	9399.84	6171.79	297.21	8649.41	3296.90	0.0	400.0	
D	31157.9	12260.66	5728.37	424.80	8579.52	4429.29	0.0	400.0	
D	0.0				0.00	0.00	0.0	0.0	COMB
F	31157.9	8173.78	5366.77	258.44	7521.22	2866.87	0.0	400.0	

SOFiSTiK AG - www.sofistik.de

Composite bridge 38+50+38, b=14.25m, 2x2HL1100R HISTAR460 , slab 0.30m C30/37

Additional Design Data

M	periphery-O/-I [m2/m]	[m2/m]	deff [mm]	t-min [mm]	t-max [mm]	SMP [o/o]	thet-p [tm2/m]	thet-y [tm2/m]	thet-z [tm2/m]	thet-yz [tm2/m]
	4.550		47.0	45.0	52.0	0.0	0.102	0.071	0.031	

Cross section No. 253.3 = CS 20 - in-situ conc:C2

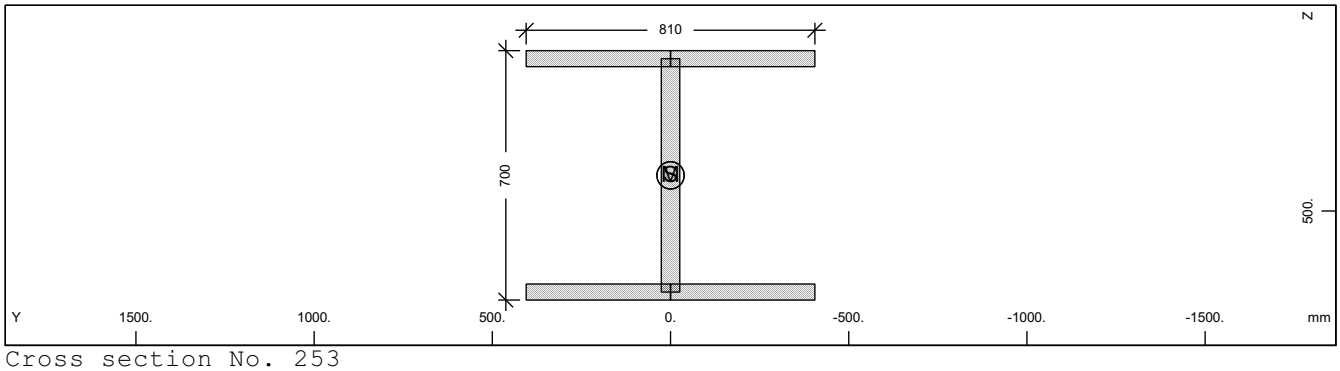

Cross section No. 253

Static properties of cross section

Mat NoR	A[cm2] It[cm4]	Ay/Az/Ayz [cm2]	Iy/Iz/Iyz [cm4]	ys/zs [mm]	modules [N/mm2]	gam [kN/m]
1	1069.60	607.50	903669.7	0.0	210000	8.40
	6270.0	288.17	398580.9	400.0	80769	

Additional static properties of cross section

Alfa-T [1/°K]	ymin ymax [mm]	zmin zmax [mm]	hymin hzmin [mm]	AK AB [cm2]	MB	Tau-T Tau-B [1/m3]	Tau-Vy Tau-Vz [1/m2]
1.2E-05	-405.0	-350.0		5.910E+02		6.508E+02	2.058E+01
	405.0	350.0				1.189E+02	3.134E+01

Section values for warping

Wmin[cm2]	Wmax[cm2]	CM[cm6]	CMS[cm4]	ASwyy[cm6]	ASwzz[cm6]	ry[mm]	rz[mm]
-1326.38	1326.38	427502762.	651581.6	-3.01	-6.82	0.0	0.0

Design values of cross section

Mat NoR	A[cm2] It[cm4]	Ay/Az/Ayz [cm2]	Iy/Iz/Iyz [cm4]	ys/zs [mm]	modules [N/mm2]	gam [kN/m]
1	1069.60	607.50	903669.7	0.0	182609	8.40
	6270.0	288.17	398580.9	400.0	70234	

Design forces and moments
(C/E = characteristic plastic/elastic, D=plast.Design, F=elast. Design)

	N[kN]	Vy[kN]	Vz[kN]	Mt[kNm]	My[kNm]	Mz[kNm]	y[mm]	z[mm]	BUCK
C	35831.6	14099.76	6587.62	488.52	9866.45	5093.69	0.0	400.0	c d
C	0.0				0.00	0.00	0.0	0.0	COMB
E	35831.6	9399.84	6171.79	297.21	8649.41	3296.90	0.0	400.0	
D	31157.9	12260.66	5728.37	424.80	8579.52	4429.29	0.0	400.0	
D	0.0				0.00	0.00	0.0	0.0	COMB
F	31157.9	8173.78	5366.77	258.44	7521.22	2866.87	0.0	400.0	

Additional Design Data

M	periphery-O/-I [m2/m]	[m2/m]	deff [mm]	t-min [mm]	t-max [mm]	SMP [o/o]	thet-p [tm2/m]	thet-y [tm2/m]	thet-z [tm2/m]	thet-yz [tm2/m]
	4.550		47.0	45.0	52.0	0.0	0.102	0.071	0.031	

SOFiSTiK AG - www.sofistik.de

Composite bridge 38+50+38, b=14.25m, 2x2HL1100R HISTAR460 , slab 0.30m C30/37

Cross section No. 253.4 = CS 21 - reinf active:C2

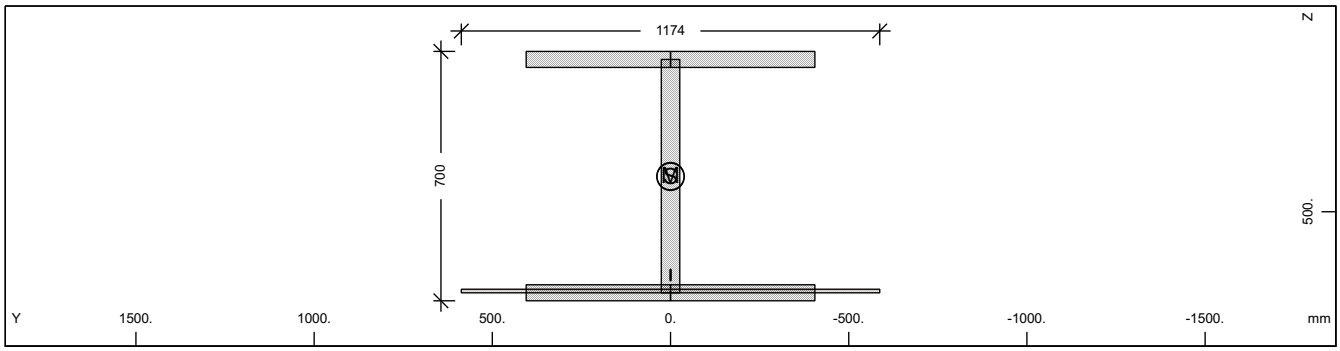

Cross section No. 253

Static properties of cross section

Mat NoR	A[cm2] It[cm4]	Ay/Az/Ayz [cm2]	Iy/Iz/Iyz [cm4]	ys/zs [mm]	modules [N/mm2]	gam [kN/m]
1	1076.18	607.50	910303.2	0.0	210000	8.69
	6270.0	288.72	398580.9	401.9	80769	

Additional static properties of cross section

Alfa-T [1/°K]	ymin ymax [mm]	zmin zmax [mm]	hymin hzmin [mm]	AK AB [cm2]	MB	Tau-T Tau-B [1/m3]	Tau-Vy Tau-Vz [1/m2]
1.2E-05	-587.0	-351.9		9.934E+01		1.715E+02	2.058E+01
	587.0	348.1		1.174E+02		1.189E+02	3.133E+01

Section values for warping

Wmin[cm2]	Wmax[cm2]	CM[cm6]	CMS[cm4]	ASwyy[cm6]	ASwzz[cm6]	ry[mm]	rz[mm]
-1326.38	1326.38	427502820.	651581.7	-1.15	-2.63	0.0	-0.5

Partial cross sections

Mat NoR	A[cm2] It[cm4]	Ay/Az/Ayz [cm2]	Iy/Iz/Iyz [cm4]	ys/zs [mm]	modules [N/mm2]	gam [kN/m]
1	1069.60	607.50	903669.7	0.0	210000	8.40
	7990.7	288.72	398580.9	400.0	80769	
25	117.40		9.8	0.0	10667	0.29
	539368.1	0.00	0.0	722.5	4444	
210	0.64	0.00	0.0	0.0	200000	0.00
	2.2	0.00	0.0	677.5	76923	

Design values of cross section

Mat NoR	A[cm2] It[cm4]	Ay/Az/Ayz [cm2]	Iy/Iz/Iyz [cm4]	ys/zs [mm]	modules [N/mm2]	gam [kN/m]
1	1074.78	607.50	908871.5	0.0	182609	8.69
	6270.0	288.72	398580.9	401.5	70234	

Design forces and moments
(C/E = characteristic plastic/elastic, D=plast.Design, F=elast. Design)

	N[kN]	Vy[kN]	Vz[kN]	Mt[kNm]	My[kNm]	Mz[kNm]	y[mm]	z[mm]	BUCK
C	35863.8	14118.33	7243.22	609.92	9999.89	5145.57	0.3	398.7	c c
C	-115.5				9998.92	0.00	0.0	401.9	COMB
C	-176.1				0.00	5145.63	0.0	0.0	COMB
C	-36216.0	14118.33	7243.22	609.92	-9887.60	-5145.48	-0.3	408.7	
C	-236.7				-9886.02	0.00	0.0	401.9	COMB
C	-176.1				0.00	-5145.63	0.0	0.0	COMB
E	36051.9	9399.84	6173.45	96.22	8664.75	3296.90	0.0	401.9	
E	-36051.9	9399.84	6173.45	96.22	-8664.75	-3296.90	0.0	401.9	
D	31185.9	12276.81	6259.15	507.29	8670.18	4463.89	0.2	399.2	
D	-84.3				8669.65	0.00	0.0	401.9	COMB
D	-117.4				0.00	4463.97	0.0	0.0	COMB
D	-31420.7	12276.81	6259.15	507.29	-8595.17	-4463.85	-0.2	406.9	
D	-150.5				-8594.38	0.00	0.0	401.9	COMB
D	-117.4				0.00	-4463.97	0.0	0.0	COMB

SOFiSTiK AG - www.sofistik.de

Composite bridge 38+50+38, b=14.25m, 2x2HL1100R HISTAR460 , slab 0.30m C30/37

Design forces and moments
(C/E = characteristic plastic/elastic, D=plast.Design, F=elast. Design)

	N[kN]	Vy[kN]	Vz[kN]	Mt[kNm]	My[kNm]	Mz[kNm]	y[mm]	z[mm]	BUCK
F	31349.5	8173.78	5368.22	64.15	7534.57	2866.87	0.0	401.9	
F	-31349.5	8173.78	5368.22	64.15	-7534.57	-2866.87	0.0	401.9	

Additional Design Data

M	periphery-O/-I [m2/m]	[m2/m]	deff [mm]	t-min [mm]	t-max [mm]	SMP [o/o]	thet-p [tm2/m]	thet-y [tm2/m]	thet-z [tm2/m]	thet-yz [tm2/m]
	4.574		47.1	32.0	52.0	0.0	0.105	0.074	0.031	
1	4.550		47.0	45.0	52.0	0.0	0.102	0.071	0.031	
25	0.020		1174.0			0.0	0.000	0.000		
**	0.004		32.0			0.0	0.000		0.000	

Cross section No. 253.5 = CS 30 - in-situ conc:C3

Cross section No. 254 - VFT (251)

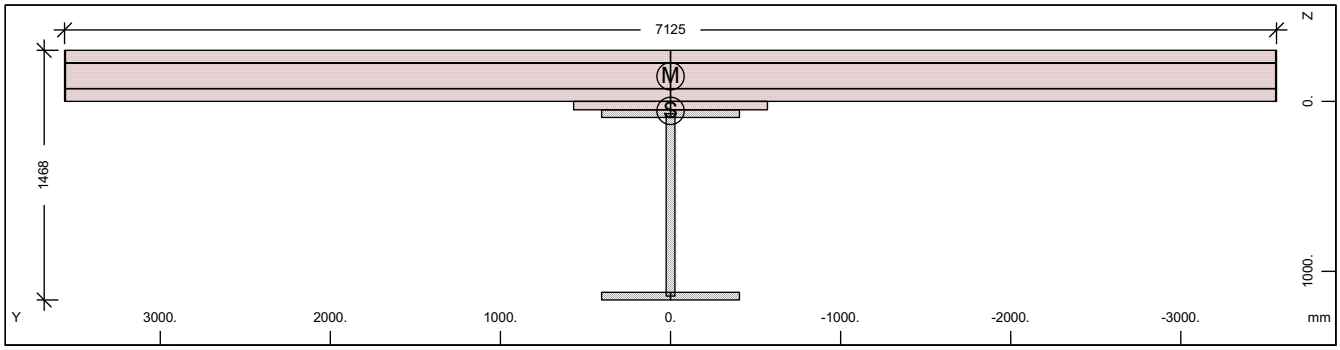

Cross section No. 254 - VFT (251)

Static properties of cross section

Mat NoR	A[cm2] It[cm4]	Ay/Az/Ayz [cm2]	Iy/Iz/Iyz [cm4]	ys/zs [mm]	y/z-sc [mm]	modules [N/mm2]	gam [kN/m]
1	4815.82	3118.65	8035554.0	0.0	0.0	210000	64.97
	6270.0	471.68	145603753.	56.1	-147.8	80769	

Additional static properties of cross section

Alfa-T [1/°K]	ymin ymax [mm]	zmin zmax [mm]	hymin hzmin [mm]	AK AB [cm2]	MB	Tau-T Tau-B [1/m3]	Tau-Vy Tau-Vz [1/m2]
1.2E-05	-3562.5	-356.1		1.437E+04		4.747E+00	4.139E+00
	3562.5	1111.9		2.195E+04		1.255E+02	1.689E+01

Section values for warping

Wmin[cm2]	Wmax[cm2]	CM[cm6]	CMS[cm4]	ASwyy[cm6]	ASwzz[cm6]	ry[mm]	rz[mm]
-5237.89	5237.89	3708299497.	924103.7	5858.15	323.30	0.0	-2510.0

Partial cross sections

Mat NoR	A[cm2] It[cm4]	Ay/Az/Ayz [cm2]	Iy/Iz/Iyz [cm4]	ys/zs [mm]	modules [N/mm2]	gam [kN/m]
1	1286.96	0.12	2633627.3	0.0	210000	10.10
	9949.8	271.17	398580.9	609.0	80769	
30	21915.00	17819.13	170022.2	0.0	32837	54.79
	6408250.4	1141.50	901077848.	-145.4	13682	
31	30.00	0.00	0.0	0.0	0	0.08
	9000.6	0.00	3802349.1	-150.0	0	
300	107.24	105.06	6032.1	0.0	200000	0.00
	0.2	7.51	4523914.0	-150.0	76923	

SOFiSTiK AG - www.sofistik.de

Composite bridge 38+50+38, b=14.25m, 2x2HL1100R HISTAR460 , slab 0.30m C30/37

Design values of cross section

Mat NoR	A[cm2] It[cm4]	Ay/Az/Ayz [cm2]	Iy/Iz/Iyz [cm4]	ys/zs [mm]	modules [N/mm2]	gam [kN/m]
1	4016.25	2414.34	7640002.0	0.0	182609	64.97
	6270.0	426.56112727857.		96.2	70234	

Design forces and moments
(C/E = characteristic plastic/elastic, D=plast.Design, F=elast. Design)

	N[kN]	Vy[kN]	Vz[kN]	Mt[kNm]	My[kNm]	Mz[kNm]	y[mm]	z[mm]	BUCK
C	48475.0	53404.68	39592.08	99166.02	35244.07	70438.37	196.7	-98.3	c d
C	-31378.3				38220.88	0.00	0.0	56.1	COMB
C	-32917.5				0.00	72080.77	0.0	0.0	COMB
C	-114310.	53404.68	39592.08	99166.00	-21773.2	-70438.4	-197.	454.6	
C	-34456.7				-24953.5	0.00	0.0	56.1	COMB
C	-32917.5				0.00	-72080.8	0.0	0.0	COMB
E	161330.0	24280.53	11453.52	3556.84	24209.37	78525.45	0.0	56.1	
E	-92396.0	24280.53	11453.52	3556.84	-24209.4	-78525.5	0.0	56.1	
D	42152.2	39092.05	29120.55	66245.72	29597.63	50563.77	93.7	-69.6	
D	-13927.7				30543.60	0.00	0.0	56.1	COMB
D	-21945.0				0.00	51041.69	0.0	0.0	COMB
D	-86042.2	39092.05	29120.55	66245.73	-18933.3	-50563.8	-93.7	453.8	
D	-29962.3				-21698.7	0.00	0.0	56.1	COMB
D	-21945.0				0.00	-51041.7	0.0	0.0	COMB
F	140287.0	16187.02	7710.96	2371.23	21051.62	52350.30	0.0	56.1	
F	-61597.3	16187.02	7710.96	2371.23	-21051.6	-52350.3	0.0	56.1	

Additional Design Data

M	periphery-O/-I [m2/m]	[m2/m]	deff [mm]	t-min [mm]	t-max [mm]	SMP [o/o]	thet-p [tm2/m]	thet-y [tm2/m]	thet-z [tm2/m]	thet-yz [tm2/m]
	50.376		19.1	0.8	300.0	0.0	23.350	0.697	22.653	
1	5.386		47.8	45.0	52.0	0.0	0.238	0.207	0.031	
30	16.510		600.0	50.0	300.0	0.0	22.531	0.004	22.527	
31	0.020		300.0	300.0	300.0	0.0	0.095		0.095	
**	28.460		0.8	0.8	0.8	0.0	0.000	0.000	0.000	

Cross section No. 254.1 = CS 1 - steel alone

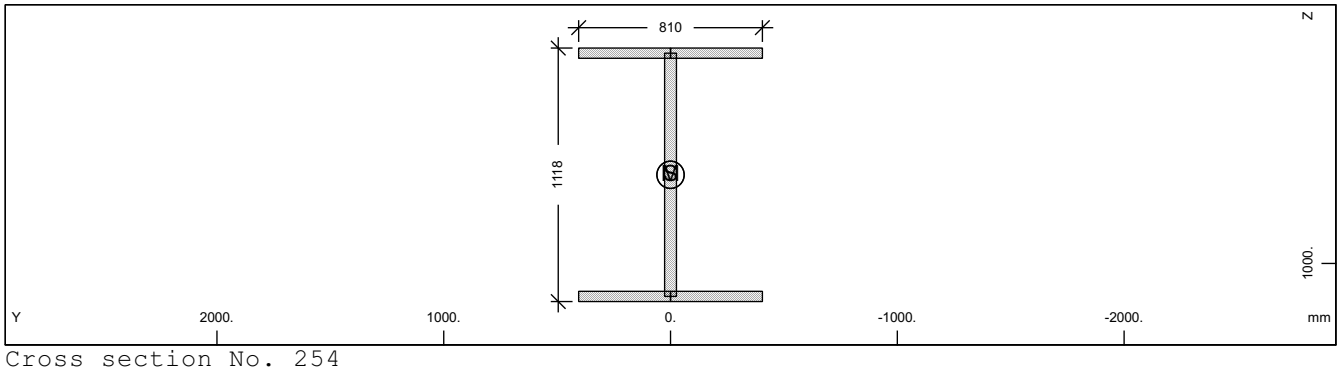

Cross section No. 254

Static properties of cross section

Mat NoR	A[cm2] It[cm4]	Ay/Az/Ayz [cm2]	Iy/Iz/Iyz [cm4]	ys/zs [mm]	modules [N/mm2]	gam [kN/m]
1	1286.96	607.50	2633627.3	0.0	210000	10.10
	6270.0	506.98	398580.9	609.0	80769	

Additional static properties of cross section

Alfa-T [1/°K]	ymin ymax [mm]	zmin zmax [mm]	hymin hzmin [mm]	AK AB [cm2]	MB	Tau-T Tau-B [1/m3]	Tau-Vy Tau-Vz [1/m2]
1.2E-05	-405.0	-559.0		7.359E+02		5.226E+02	2.058E+01
	405.0	559.0				1.255E+02	1.974E+01

SOFiSTiK AG - www.sofistik.de

Composite bridge 38+50+38, b=14.25m, 2x2HL1100R HISTAR460 , slab 0.30m C30/37

Section values for warping

Wmin[cm2]	Wmax[cm2]	CM[cm6]	CMS[cm4]	ASwyy[cm6]	ASwzz[cm6]	ry[mm]	rz[mm]
-2172.83	2172.831147244363.	1748581.4		-0.16	-1.04	0.0	0.0

Design values of cross section

Mat NoR	A[cm2] It[cm4]	Ay/Az/Ayz [cm2]	Iy/Iz/Iyz [cm4]	ys/zs [mm]	modules [N/mm2]	gam [kN/m]
1	1286.96	607.50	2633627.3	0.0	182609	10.10
	6270.0	506.98	398580.9	609.0	70234	

Design forces and moments
(C/E = characteristic plastic/elastic, D=plast.Design, F=elast. Design)

	N[kN]	Vy[kN]	Vz[kN]	Mt[kNm]	My[kNm]	Mz[kNm]	y[mm]	z[mm]	BUCK
C	43113.2	14099.76	10791.64	597.83	18116.18	5188.35	0.0	609.0	c d
C	0.0				0.00	0.00	0.0	0.0	COMB
E	43113.2	9399.84	9796.03	370.08	15782.92	3296.90	0.0	609.0	
D	37489.7	12260.66	9384.03	519.85	15753.20	4511.61	0.0	609.0	
D	0.0				0.00	0.00	0.0	0.0	COMB
F	37489.7	8173.78	8518.29	321.81	13724.27	2866.87	0.0	609.0	

Additional Design Data

M	periphery-O/-I [m2/m]	[m2/m]	deff [mm]	t-min [mm]	t-max [mm]	SMP [o/o]	thet-p [tm2/m]	thet-y [tm2/m]	thet-z [tm2/m]	thet-yz [tm2/m]
	5.386		47.8	45.0	52.0	0.0	0.238	0.207	0.031	

Cross section No. 254.2 = CS 10 - prefab. slab C1

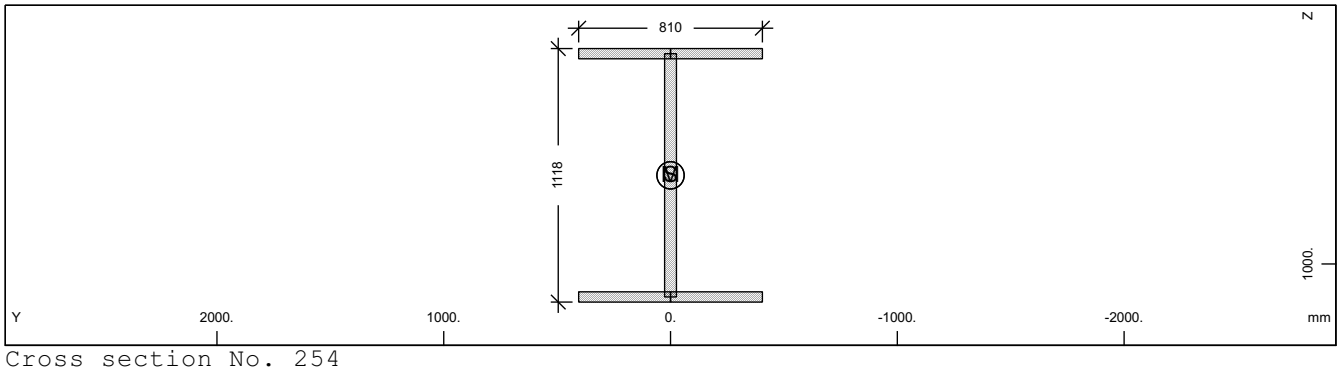

Cross section No. 254

Static properties of cross section

Mat NoR	A[cm2] It[cm4]	Ay/Az/Ayz [cm2]	Iy/Iz/Iyz [cm4]	ys/zs [mm]	modules [N/mm2]	gam [kN/m]
1	1286.96	607.50	2633627.3	0.0	210000	10.10
	6270.0	506.98	398580.9	609.0	80769	

Additional static properties of cross section

Alfa-T [1/°K]	ymin ymax [mm]	zmin zmax [mm]	hymin hzmin [mm]	AK AB [cm2]	MB	Tau-T Tau-B [1/m3]	Tau-Vy Tau-Vz [1/m2]
1.2E-05	-405.0	-559.0		7.359E+02		5.226E+02	2.058E+01
	405.0	559.0				1.255E+02	1.974E+01

Section values for warping

Wmin[cm2]	Wmax[cm2]	CM[cm6]	CMS[cm4]	ASwyy[cm6]	ASwzz[cm6]	ry[mm]	rz[mm]
-2172.83	2172.831147244363.	1748581.4		-0.16	-1.04	0.0	0.0

Design values of cross section

Mat NoR	A[cm2] It[cm4]	Ay/Az/Ayz [cm2]	Iy/Iz/Iyz [cm4]	ys/zs [mm]	modules [N/mm2]	gam [kN/m]
1	1286.96	607.50	2633627.3	0.0	182609	10.10
	6270.0	506.98	398580.9	609.0	70234	

SOFiSTiK AG - www.sofistik.de

Composite bridge 38+50+38, b=14.25m, 2x2HL1100R HISTAR460 , slab 0.30m C30/37

Design forces and moments
(C/E = characteristic plastic/elastic, D=plast.Design, F=elast. Design)

	N[kN]	Vy[kN]	Vz[kN]	Mt[kNm]	My[kNm]	Mz[kNm]	y[mm]	z[mm]	BUCK
C	43113.2	14099.76	10791.64	597.83	18116.18	5188.35	0.0	609.0	c d
C	0.0				0.00	0.00	0.0	0.0	COMB
E	43113.2	9399.84	9796.03	370.08	15782.92	3296.90	0.0	609.0	
D	37489.7	12260.66	9384.03	519.85	15753.20	4511.61	0.0	609.0	
D	0.0				0.00	0.00	0.0	0.0	COMB
F	37489.7	8173.78	8518.29	321.81	13724.27	2866.87	0.0	609.0	

Additional Design Data

M	periphery-O/-I [m2/m]	[m2/m]	deff [mm]	t-min [mm]	t-max [mm]	SMP [o/o]	thet-p [tm2/m]	thet-y [tm2/m]	thet-z [tm2/m]	thet-yz [tm2/m]
	5.386		47.8	45.0	52.0	0.0	0.238	0.207	0.031	

Cross section No. 254.3 = CS 20 - in-situ conc:C2

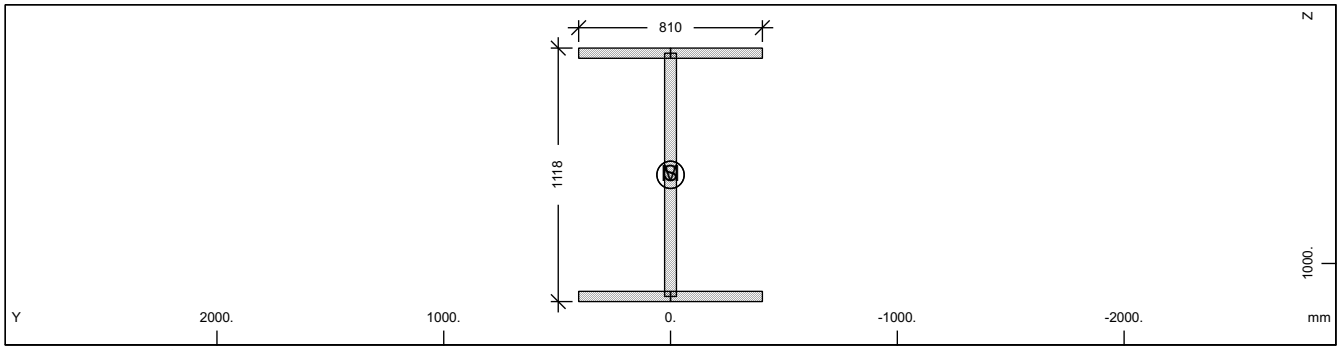

Cross section No. 254

Static properties of cross section

Mat NoR	A[cm2] It[cm4]	Ay/Az/Ayz [cm2]	Iy/Iz/Iyz [cm4]	ys/zs [mm]	modules [N/mm2]	gam [kN/m]
1	1286.96	607.50	2633627.3	0.0	210000	10.10
	6270.0	506.98	398580.9	609.0	80769	

Additional static properties of cross section

Alfa-T [1/°K]	ymin ymax [mm]	zmin zmax [mm]	hymin hzmin [mm]	AK AB [cm2]	MB	Tau-T Tau-B [1/m3]	Tau-Vy Tau-Vz [1/m2]
1.2E-05	-405.0	-559.0		7.359E+02		5.226E+02	2.058E+01
	405.0	559.0				1.255E+02	1.974E+01

Section values for warping

Wmin[cm2]	Wmax[cm2]	CM[cm6]	CMS[cm4]	ASwyy[cm6]	ASwzz[cm6]	ry[mm]	rz[mm]
-2172.83	2172.831147244363.		1748581.4	-0.16	-1.04	0.0	0.0

Design values of cross section

Mat NoR	A[cm2] It[cm4]	Ay/Az/Ayz [cm2]	Iy/Iz/Iyz [cm4]	ys/zs [mm]	modules [N/mm2]	gam [kN/m]
1	1286.96	607.50	2633627.3	0.0	182609	10.10
	6270.0	506.98	398580.9	609.0	70234	

Design forces and moments
(C/E = characteristic plastic/elastic, D=plast.Design, F=elast. Design)

	N[kN]	Vy[kN]	Vz[kN]	Mt[kNm]	My[kNm]	Mz[kNm]	y[mm]	z[mm]	BUCK
C	43113.2	14099.76	10791.64	597.83	18116.18	5188.35	0.0	609.0	c d
C	0.0				0.00	0.00	0.0	0.0	COMB
E	43113.2	9399.84	9796.03	370.08	15782.92	3296.90	0.0	609.0	
D	37489.7	12260.66	9384.03	519.85	15753.20	4511.61	0.0	609.0	
D	0.0				0.00	0.00	0.0	0.0	COMB
F	37489.7	8173.78	8518.29	321.81	13724.27	2866.87	0.0	609.0	

SOFiSTiK AG - www.sofistik.de

Composite bridge 38+50+38, b=14.25m, 2x2HL1100R HISTAR460 , slab 0.30m C30/37

Additional Design Data

M	periphery-O/-I [m2/m]	[m2/m]	deff [mm]	t-min [mm]	t-max [mm]	SMP [o/o]	thet-p [tm2/m]	thet-y [tm2/m]	thet-z [tm2/m]	thet-yz [tm2/m]
	5.386		47.8	45.0	52.0	0.0	0.238	0.207	0.031	

Cross section No. 254.4 = CS 21 - reinf active:C2

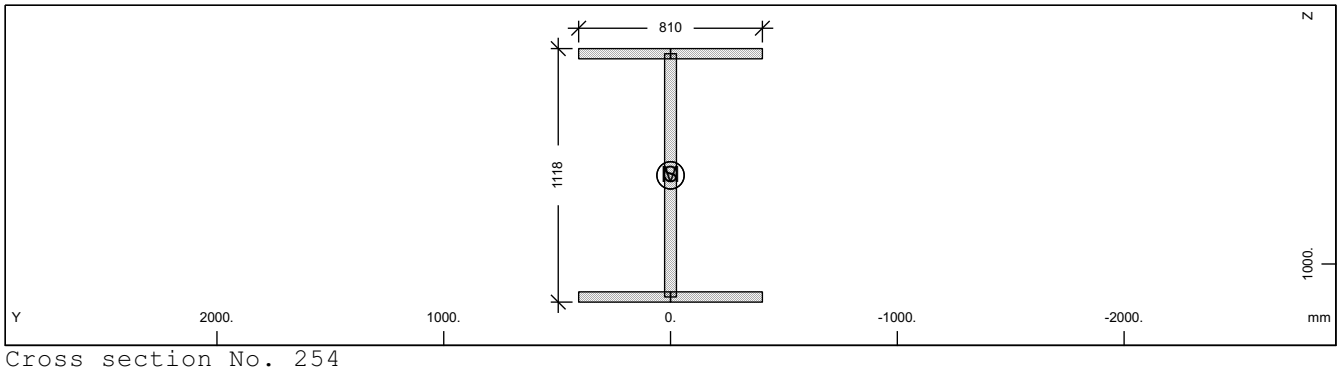

Cross section No. 254

Static properties of cross section

Mat NoR	A[cm2] It[cm4]	Ay/Az/Ayz [cm2]	Iy/Iz/Iyz [cm4]	ys/zs [mm]	modules [N/mm2]	gam [kN/m]
1	1286.96	607.50	2633627.3	0.0	210000	10.10
	6270.0	506.98	398580.9	609.0	80769	

Additional static properties of cross section

Alfa-T [1/°K]	ymin ymax [mm]	zmin zmax [mm]	hymin hzmin [mm]	AK AB [cm2]	MB	Tau-T Tau-B [1/m3]	Tau-Vy Tau-Vz [1/m2]
1.2E-05	-405.0	-559.0		7.359E+02		5.226E+02	2.058E+01
	405.0	559.0				1.255E+02	1.974E+01

Section values for warping

Wmin[cm2]	Wmax[cm2]	CM[cm6]	CMS[cm4]	ASwyy[cm6]	ASwzz[cm6]	ry[mm]	rz[mm]
-2172.83	2172.831147244363.		1748581.4	-0.16	-1.04	0.0	0.0

Design values of cross section

Mat NoR	A[cm2] It[cm4]	Ay/Az/Ayz [cm2]	Iy/Iz/Iyz [cm4]	ys/zs [mm]	modules [N/mm2]	gam [kN/m]
1	1286.96	607.50	2633627.3	0.0	182609	10.10
	6270.0	506.98	398580.9	609.0	70234	

Design forces and moments
(C/E = characteristic plastic/elastic, D=plast.Design, F=elast. Design)

	N[kN]	Vy[kN]	Vz[kN]	Mt[kNm]	My[kNm]	Mz[kNm]	y[mm]	z[mm]	BUCK
C	43113.2	14099.76	10791.64	597.83	18116.18	5188.35	0.0	609.0	c d
C	0.0				0.00	0.00	0.0	0.0	COMB
E	43113.2	9399.84	9796.03	370.08	15782.92	3296.90	0.0	609.0	
D	37489.7	12260.66	9384.03	519.85	15753.20	4511.61	0.0	609.0	
D	0.0				0.00	0.00	0.0	0.0	COMB
F	37489.7	8173.78	8518.29	321.81	13724.27	2866.87	0.0	609.0	

Additional Design Data

M	periphery-O/-I [m2/m]	[m2/m]	deff [mm]	t-min [mm]	t-max [mm]	SMP [o/o]	thet-p [tm2/m]	thet-y [tm2/m]	thet-z [tm2/m]	thet-yz [tm2/m]
	5.386		47.8	45.0	52.0	0.0	0.238	0.207	0.031	

SOFiSTiK AG - www.sofistik.de

Composite bridge 38+50+38, b=14.25m, 2x2HL1100R HISTAR460 , slab 0.30m C30/37

Cross section No. 254.5 = CS 30 - in-situ conc:C3

Cross section No. 255 - VFT (251)

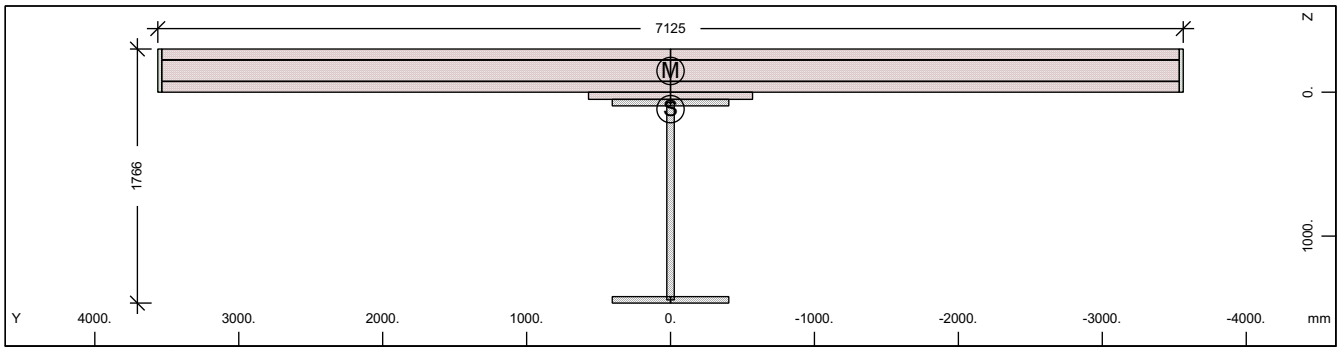

Cross section No. 255 - VFT (251)

Static properties of cross section

Mat NoR	A[cm2] It[cm4]	Ay/Az/Ayz [cm2]	Iy/Iz/Iyz [cm4]	ys/zs [mm]	y/z-sc [mm]	modules [N/mm2]	gam [kN/m]
1	4948.82	3099.22	12913561.	0.0	0.0	210000	66.18
	6270.0	616.90142852331.		117.7	-147.3	80769	

Additional static properties of cross section

Alfa-T [1/°K]	ymin ymax [mm]	zmin zmax [mm]	hymin hzmin [mm]	AK AB [cm2]	MB	Tau-T Tau-B [1/m3]	Tau-Vy Tau-Vz [1/m2]
1.2E-05	-3562.5	-417.7		1.430E+04		4.771E+00	4.165E+00
	3562.5	1348.2		2.195E+04		1.255E+02	1.400E+01

Section values for warping

Wmin[cm2]	Wmax[cm2]	CM[cm6]	CMS[cm4]	ASwyy[cm6]	ASwzz[cm6]	ry[mm]	rz[mm]
-6442.26	6442.265415343235.		1861687.6	-5212.70	-471.22	0.0	-1484.4

Partial cross sections

Mat NoR	A[cm2] It[cm4]	Ay/Az/Ayz [cm2]	Iy/Iz/Iyz [cm4]	ys/zs [mm]	modules [N/mm2]	gam [kN/m]
1	1441.83	0.12	4541099.5	0.0	210000	11.32
	11345.8	397.41	398580.9	757.9	80769	
30	21779.23	17708.06	169993.9	0.0	32837	54.45
	6367519.5	1251.66884004217.		-145.4	13682	
31	165.77	0.02	0.0	0.0	0	0.41
	49731.6	0.00	20876055.	-150.0	0	
300	106.56	104.41	5993.7	0.0	200000	0.00
	0.2	7.84	4438135.8	-150.0	76923	

Design values of cross section

Mat NoR	A[cm2] It[cm4]	Ay/Az/Ayz [cm2]	Iy/Iz/Iyz [cm4]	ys/zs [mm]	modules [N/mm2]	gam [kN/m]
1	4154.20	2399.30	12252136.	0.0	182609	66.18
	6270.0	567.43110599375.		168.0	70234	

Design forces and moments
(C/E = characteristic plastic/elastic, D=plast.Design, F=elast. Design)

	N[kN]	Vy[kN]	Vz[kN]	Mt[kNm]	My[kNm]	Mz[kNm]	y[mm]	z[mm]	BUCK
C	53629.2	53384.99	42587.52	99243.90	46041.27	71152.04	125.0	-75.3	c d
C	-48856.7				50812.49	0.00	0.0	117.7	COMB
C	-32917.5				0.00	72027.28	0.0	0.0	COMB
C	-119464.	53384.99	42587.52	99243.88	-29352.5	-71152.0	-125.	604.8	
C	-16978.3				-33489.5	0.00	0.0	117.7	COMB
C	-32917.5				0.00	-72027.3	0.0	0.0	COMB
E	165785.3	24127.68	13814.96	3538.97	32088.48	77534.77	0.0	117.7	
E	-94947.6	24127.68	13814.96	3538.97	-32088.5	-77534.8	0.0	117.7	
D	46634.1	39074.93	31725.28	66313.44	38839.24	50714.98	25.5	-37.8	

SOFiSTiK AG - www.sofistik.de

Composite bridge 38+50+38, b=14.25m, 2x2HL1100R HISTAR460 , slab 0.30m C30/37

Design forces and moments
(C/E = characteristic plastic/elastic, D=plast.Design, F=elast. Design)

	N[kN]	Vy[kN]	Vz[kN]	Mt[kNm]	My[kNm]	Mz[kNm]	y[mm]	z[mm]	BUCK
D	-29126.2				40669.97	0.00	0.0	117.7	COMB
D	-21945.0				0.00	50995.17	0.0	0.0	COMB
D	-90524.1	39074.93	31725.28	66313.45	-25524.0	-50715.0	-25.5	604.3	
D	-14763.8				-29121.3	0.00	0.0	117.7	COMB
D	-21945.0				0.00	-50995.2	0.0	0.0	COMB
F	144161.1	16085.12	9601.14	2359.32	27903.03	51689.84	0.0	117.7	
F	-63298.4	16085.12	9601.14	2359.32	-27903.0	-51689.8	0.0	117.7	

Additional Design Data

M	periphery-O/-I [m2/m]	[m2/m]	deff [mm]	t-min [mm]	t-max [mm]	SMP [o/o]	thet-p [tm2/m]	thet-y [tm2/m]	thet-z [tm2/m]	thet-yz [tm2/m]
	50.791		19.5	0.8	300.0	0.0	23.780	1.126	22.653	
1	5.982		48.2	45.0	52.0	0.0	0.388	0.356	0.031	
30	16.419		600.0	50.0	300.0	0.0	22.104	0.004	22.100	
31	0.111		300.0	300.0	300.0	0.0	0.522		0.522	
**	28.279		0.8	0.8	0.8	0.0	0.000	0.000	0.000	

Cross section No. 255.1 = CS 1 - steel alone

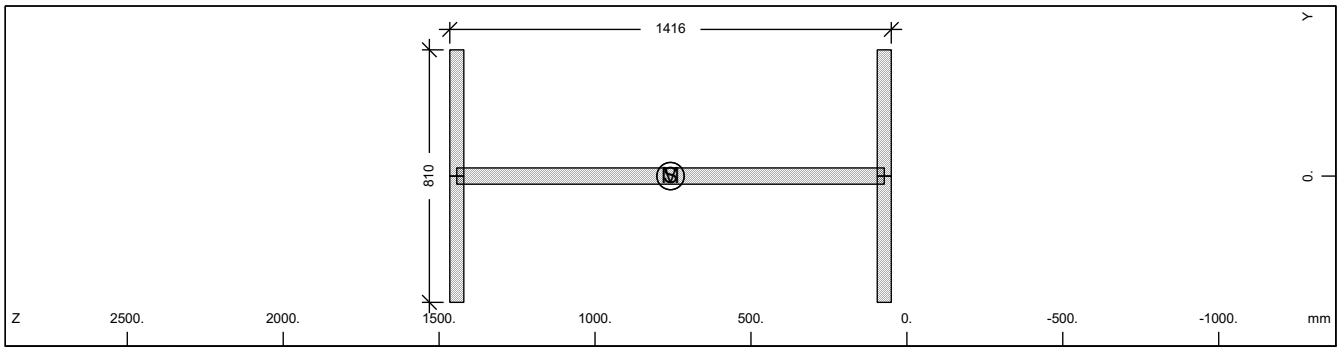

Cross section No. 255

Static properties of cross section

Mat NoR	A[cm2] It[cm4]	Ay/Az/Ayz [cm2]	Iy/Iz/Iyz [cm4]	ys/zs [mm]	modules [N/mm2]	gam [kN/m]
1	1441.83	607.50	4541099.5	0.0	210000	11.32
	6270.0	661.98	398580.9	757.9	80769	

Additional static properties of cross section

Alfa-T [1/°K]	ymin ymax [mm]	zmin zmax [mm]	hymin hzmin [mm]	AK AB [cm2]	MB	Tau-T Tau-B [1/m3]	Tau-Vy Tau-Vz [1/m2]
1.2E-05	-405.0	-707.9		8.392E+02		4.583E+02	2.058E+01
	405.0	707.9				1.255E+02	1.575E+01

Section values for warping

Wmin[cm2]	Wmax[cm2]	CM[cm6]	CMS[cm4]	ASwyy[cm6]	ASwzz[cm6]	ry[mm]	rz[mm]
-2775.94	2775.941872516361.		2854010.1	-3.83	-43.63	0.0	0.0

Design values of cross section

Mat NoR	A[cm2] It[cm4]	Ay/Az/Ayz [cm2]	Iy/Iz/Iyz [cm4]	ys/zs [mm]	modules [N/mm2]	gam [kN/m]
1	1441.83	607.50	4541099.5	0.0	182609	11.32
	6270.0	661.98	398580.9	757.9	70234	

Design forces and moments
(C/E = characteristic plastic/elastic, D=plast.Design, F=elast. Design)

	N[kN]	Vy[kN]	Vz[kN]	Mt[kNm]	My[kNm]	Mz[kNm]	y[mm]	z[mm]	BUCK
C	48301.4	14099.76	13787.08	675.71	24922.75	5255.79	0.0	757.9	c d
C	0.0				0.00	0.00	0.0	0.0	COMB
E	48301.4	9399.84	12277.99	422.00	21489.37	3296.90	0.0	757.9	
D	42001.2	12260.66	11988.76	587.57	21671.96	4570.26	0.0	757.9	

SOFiSTiK AG - www.sofistik.de

Composite bridge 38+50+38, b=14.25m, 2x2HL1100R HISTAR460 , slab 0.30m C30/37

Design forces and moments
(C/E = characteristic plastic/elastic, D=plast.Design, F=elast. Design)

	N[kN]	Vy[kN]	Vz[kN]	Mt[kNm]	My[kNm]	Mz[kNm]	y[mm]	z[mm]	BUCK
D	0.0				0.00	0.00	0.0	0.0	COMB
F	42001.2	8173.78	10676.52	366.96	18686.41	2866.87	0.0	757.9	

Additional Design Data

M	periphery-O/-I [m2/m]	[m2/m]	deff [mm]	t-min [mm]	t-max [mm]	SMP [o/o]	thet-p [tm2/m]	thet-y [tm2/m]	thet-z [tm2/m]	thet-yz [tm2/m]
	5.982		48.2	45.0	52.0	0.0	0.388	0.356	0.031	

Cross section No. 255.2 = CS 10 - prefab. slab C1

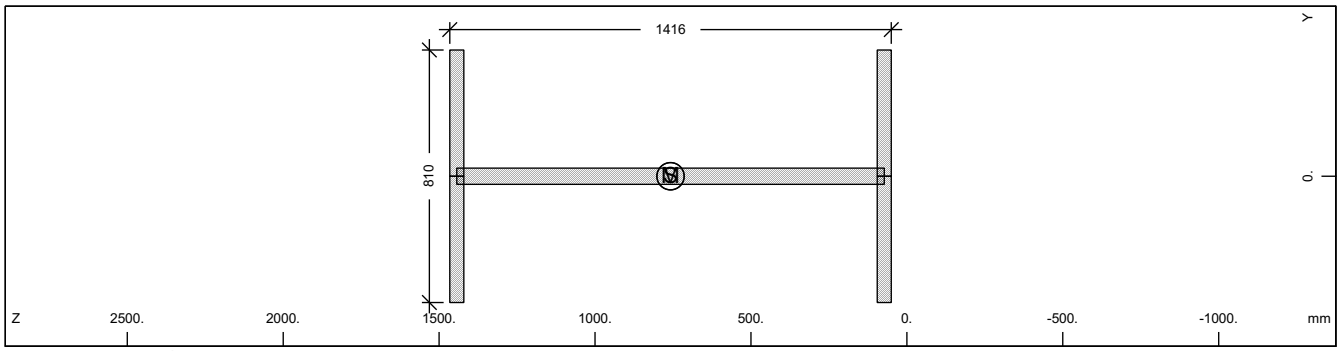

Cross section No. 255

Static properties of cross section

Mat NoR	A[cm2] It[cm4]	Ay/Az/Ayz [cm2]	Iy/Iz/Iyz [cm4]	ys/zs [mm]	modules [N/mm2]	gam [kN/m]
1	1441.83	607.50	4541099.5	0.0	210000	11.32
	6270.0	661.98	398580.9	757.9	80769	

Additional static properties of cross section

Alfa-T [1/°K]	ymin ymax [mm]	zmin zmax [mm]	hymin hzmin [mm]	AK AB [cm2]	MB	Tau-T Tau-B [1/m3]	Tau-Vy Tau-Vz [1/m2]
1.2E-05	-405.0	-707.9		8.392E+02		4.583E+02	2.058E+01
	405.0	707.9				1.255E+02	1.575E+01

Section values for warping

Wmin[cm2]	Wmax[cm2]	CM[cm6]	CMS[cm4]	ASwyy[cm6]	ASwzz[cm6]	ry[mm]	rz[mm]
-2775.94	2775.941872516361.		2854010.1	-3.83	-43.63	0.0	0.0

Design values of cross section

Mat NoR	A[cm2] It[cm4]	Ay/Az/Ayz [cm2]	Iy/Iz/Iyz [cm4]	ys/zs [mm]	modules [N/mm2]	gam [kN/m]
1	1441.83	607.50	4541099.5	0.0	182609	11.32
	6270.0	661.98	398580.9	757.9	70234	

Design forces and moments
(C/E = characteristic plastic/elastic, D=plast.Design, F=elast. Design)

	N[kN]	Vy[kN]	Vz[kN]	Mt[kNm]	My[kNm]	Mz[kNm]	y[mm]	z[mm]	BUCK
C	48301.4	14099.76	13787.08	675.71	24922.75	5255.79	0.0	757.9	c d
C	0.0				0.00	0.00	0.0	0.0	COMB
E	48301.4	9399.84	12277.99	422.00	21489.37	3296.90	0.0	757.9	
D	42001.2	12260.66	11988.76	587.57	21671.96	4570.26	0.0	757.9	
D	0.0				0.00	0.00	0.0	0.0	COMB
F	42001.2	8173.78	10676.52	366.96	18686.41	2866.87	0.0	757.9	

Additional Design Data

M	periphery-O/-I [m2/m]	[m2/m]	deff [mm]	t-min [mm]	t-max [mm]	SMP [o/o]	thet-p [tm2/m]	thet-y [tm2/m]	thet-z [tm2/m]	thet-yz [tm2/m]
	5.982		48.2	45.0	52.0	0.0	0.388	0.356	0.031	

SOFiSTiK AG - www.sofistik.de

Composite bridge 38+50+38, b=14.25m, 2x2HL1100R HISTAR460 , slab 0.30m C30/37

Cross section No. 255.3 = CS 20 - in-situ conc:C2

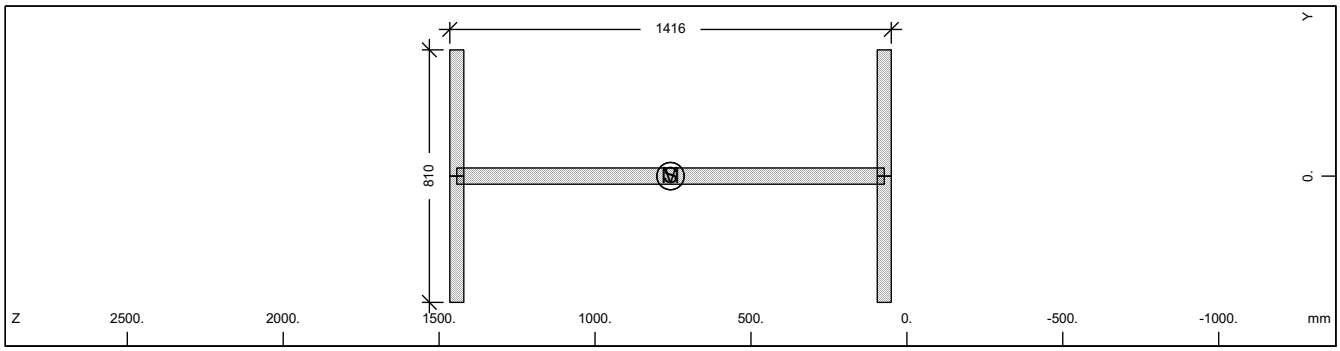

Cross section No. 255

Static properties of cross section

Mat NoR	A[cm2] It[cm4]	Ay/Az/Ayz [cm2]	Iy/Iz/Iyz [cm4]	ys/zs [mm]	modules [N/mm2]	gam [kN/m]
1	1441.83	607.50	4541099.5	0.0	210000	11.32
	6270.0	661.98	398580.9	757.9	80769	

Additional static properties of cross section

Alfa-T [1/°K]	ymin ymax [mm]	zmin zmax [mm]	hymin hzmin [mm]	AK AB [cm2]	MB	Tau-T Tau-B [1/m3]	Tau-Vy Tau-Vz [1/m2]
1.2E-05	-405.0	-707.9		8.392E+02		4.583E+02	2.058E+01
	405.0	707.9				1.255E+02	1.575E+01

Section values for warping

Wmin[cm2]	Wmax[cm2]	CM[cm6]	CMS[cm4]	ASwyy[cm6]	ASwzz[cm6]	ry[mm]	rz[mm]
-2775.94	2775.941872516361.		2854010.1	-3.83	-43.63	0.0	0.0

Design values of cross section

Mat NoR	A[cm2] It[cm4]	Ay/Az/Ayz [cm2]	Iy/Iz/Iyz [cm4]	ys/zs [mm]	modules [N/mm2]	gam [kN/m]
1	1441.83	607.50	4541099.5	0.0	182609	11.32
	6270.0	661.98	398580.9	757.9	70234	

Design forces and moments
(C/E = characteristic plastic/elastic, D=plast.Design, F=elast. Design)

	N[kN]	Vy[kN]	Vz[kN]	Mt[kNm]	My[kNm]	Mz[kNm]	y[mm]	z[mm]	BUCK
C	48301.4	14099.76	13787.08	675.71	24922.75	5255.79	0.0	757.9	c d
C	0.0				0.00	0.00	0.0	0.0	COMB
E	48301.4	9399.84	12277.99	422.00	21489.37	3296.90	0.0	757.9	
D	42001.2	12260.66	11988.76	587.57	21671.96	4570.26	0.0	757.9	
D	0.0				0.00	0.00	0.0	0.0	COMB
F	42001.2	8173.78	10676.52	366.96	18686.41	2866.87	0.0	757.9	

Additional Design Data

M	periphery-O/-I [m2/m] [m2/m]	deff [mm]	t-min [mm]	t-max [mm]	SMP [o/o]	thet-p [tm2/m]	thet-y [tm2/m]	thet-z [tm2/m]	thet-yz [tm2/m]
	5.982	48.2	45.0	52.0	0.0	0.388	0.356	0.031	

SOFiSTiK AG - www.sofistik.de

Composite bridge 38+50+38, b=14.25m, 2x2HL1100R HISTAR460 , slab 0.30m C30/37

Cross section No. 255.4 = CS 21 - reinf active:C2

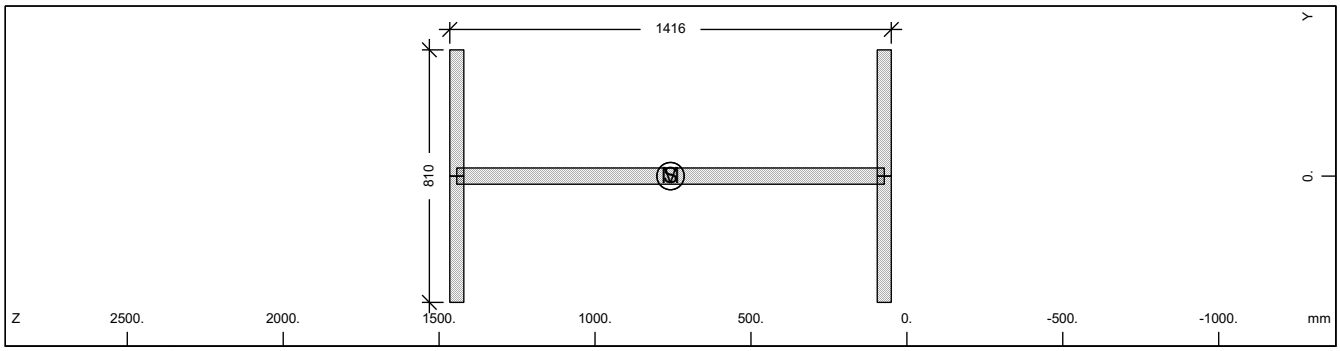

Cross section No. 255

Static properties of cross section

Mat NoR	A[cm2] It[cm4]	Ay/Az/Ayz [cm2]	Iy/Iz/Iyz [cm4]	ys/zs [mm]	modules [N/mm2]	gam [kN/m]
1	1441.83	607.50	4541099.5	0.0	210000	11.32
	6270.0	661.98	398580.9	757.9	80769	

Additional static properties of cross section

Alfa-T [1/°K]	ymin ymax [mm]	zmin zmax [mm]	hymin hzmin [mm]	AK AB [cm2]	MB	Tau-T Tau-B [1/m3]	Tau-Vy Tau-Vz [1/m2]
1.2E-05	-405.0	-707.9		8.392E+02		4.583E+02	2.058E+01
	405.0	707.9				1.255E+02	1.575E+01

Section values for warping

Wmin[cm2]	Wmax[cm2]	CM[cm6]	CMS[cm4]	ASwyy[cm6]	ASwzz[cm6]	ry[mm]	rz[mm]
-2775.94	2775.941872516361.		2854010.1	-3.83	-43.63	0.0	0.0

Design values of cross section

Mat NoR	A[cm2] It[cm4]	Ay/Az/Ayz [cm2]	Iy/Iz/Iyz [cm4]	ys/zs [mm]	modules [N/mm2]	gam [kN/m]
1	1441.83	607.50	4541099.5	0.0	182609	11.32
	6270.0	661.98	398580.9	757.9	70234	

Design forces and moments
(C/E = characteristic plastic/elastic, D=plast.Design, F=elast. Design)

	N[kN]	Vy[kN]	Vz[kN]	Mt[kNm]	My[kNm]	Mz[kNm]	y[mm]	z[mm]	BUCK
C	48301.4	14099.76	13787.08	675.71	24922.75	5255.79	0.0	757.9	c d
C	0.0				0.00	0.00	0.0	0.0	COMB
E	48301.4	9399.84	12277.99	422.00	21489.37	3296.90	0.0	757.9	
D	42001.2	12260.66	11988.76	587.57	21671.96	4570.26	0.0	757.9	
D	0.0				0.00	0.00	0.0	0.0	COMB
F	42001.2	8173.78	10676.52	366.96	18686.41	2866.87	0.0	757.9	

Additional Design Data

M	periphery-O/-I [m2/m]	[m2/m]	deff [mm]	t-min [mm]	t-max [mm]	SMP [o/o]	thet-p [tm2/m]	thet-y [tm2/m]	thet-z [tm2/m]	thet-yz [tm2/m]
	5.982		48.2	45.0	52.0	0.0	0.388	0.356	0.031	

SOFiSTiK AG - www.sofistik.de

Composite bridge 38+50+38, b=14.25m, 2x2HL1100R HISTAR460 , slab 0.30m C30/37

Cross section No. 255.5 = CS 30 - in-situ conc:C3

Cross section No. 256 - VFT (251)

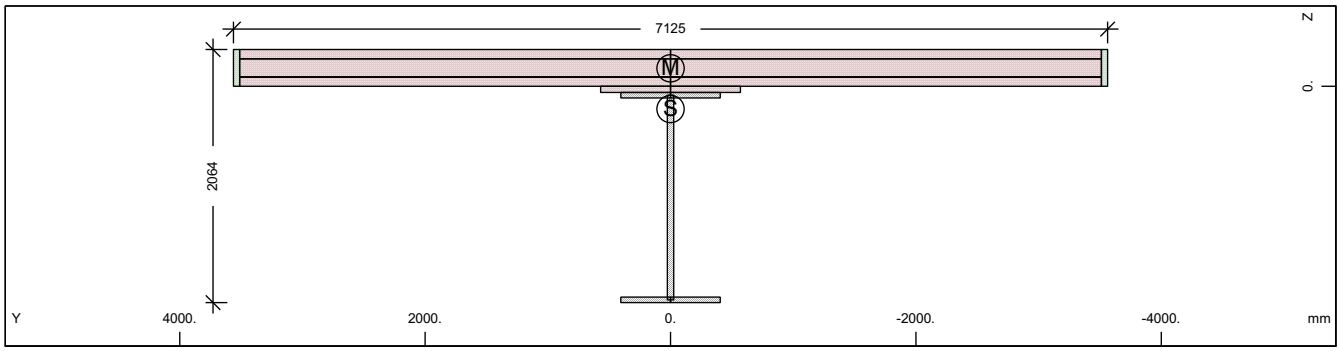

Cross section No. 256 - VFT (251)

Static properties of cross section

Mat NoR	A[cm2] It[cm4]	Ay/Az/Ayz [cm2]	Iy/Iz/Iyz [cm4]	ys/zs [mm]	y/z-sc [mm]	modules [N/mm2]	gam [kN/m]
1	5081.81	3079.79	19247483.	0.0	0.0	210000	67.40
	6270.0	762.95	140135802.	185.1	-146.9	80769	

Additional static properties of cross section

Alfa-T [1/°K]	ymin ymax [mm]	zmin zmax [mm]	hymin hzmin [mm]	AK AB [cm2]	MB	Tau-T Tau-B [1/m3]	Tau-Vy Tau-Vz [1/m2]
1.2E-05	-3562.5	-485.1		1.423E+04		4.795E+00	4.192E+00
	3562.5	1578.5		2.195E+04		1.255E+02	1.196E+01

Section values for warping

Wmin[cm2]	Wmax[cm2]	CM[cm6]	CMS[cm4]	ASwyy[cm6]	ASwzz[cm6]	ry[mm]	rz[mm]
-7646.61	7646.617	475473482.	3308763.7	2004.53	275.32	0.0	-710.9

Partial cross sections

Mat NoR	A[cm2] It[cm4]	Ay/Az/Ayz [cm2]	Iy/Iz/Iyz [cm4]	ys/zs [mm]	modules [N/mm2]	gam [kN/m]
1	1596.71	0.13	7088169.5	0.0	210000	12.53
	12741.7	530.75	398580.9	906.8	80769	
30	21643.46	17597.01	169965.3	0.0	32837	54.11
	6326787.2	1325.31	867146974.	-145.4	13682	
31	301.55	0.13	0.0	0.0	0	0.75
	90464.3	0.00	37733266.	-150.0	0	
300	105.87	103.75	5955.4	0.0	200000	0.00
	0.2	8.08	4353445.0	-150.0	76923	

Design values of cross section

Mat NoR	A[cm2] It[cm4]	Ay/Az/Ayz [cm2]	Iy/Iz/Iyz [cm4]	ys/zs [mm]	modules [N/mm2]	gam [kN/m]
1	4292.15	2384.25	18219912.	0.0	182609	67.40
	6270.0	710.57	108497883.	245.9	70234	

Design forces and moments
(C/E = characteristic plastic/elastic, D=plast.Design, F=elast. Design)

	N[kN]	Vy[kN]	Vz[kN]	Mt[kNm]	My[kNm]	Mz[kNm]	y[mm]	z[mm]	BUCK
C	58783.5	53365.30	45583.08	99321.78	58325.99	71494.22	53.2	-74.5	c d
C	-45984.3				65113.76	0.00	0.0	185.1	COMB
C	-32917.5				0.00	71974.55	0.0	0.0	COMB
C	-124619.	53365.30	45583.07	99321.75	-37694.6	-71494.2	-53.2	754.7	
C	-19850.7				-43349.8	0.00	0.0	185.1	COMB
C	-32917.5				0.00	-71974.6	0.0	0.0	COMB
E	170240.8	23974.84	16176.00	3521.10	40847.06	76550.40	0.0	185.1	
E	-97499.3	23974.84	16176.00	3521.10	-40847.1	-76550.4	0.0	185.1	
D	51116.1	39057.81	34330.11	66381.16	49280.23	50716.20	21.2	-5.9	

SOFiSTiK AG - www.sofistik.de

Composite bridge 38+50+38, b=14.25m, 2x2HL1100R HISTAR460 , slab 0.30m C30/37

Design forces and moments
(C/E = characteristic plastic/elastic, D=plast.Design, F=elast. Design)

	N[kN]	Vy[kN]	Vz[kN]	Mt[kNm]	My[kNm]	Mz[kNm]	y[mm]	z[mm]	BUCK
D	-26628.5				52204.78	0.00	0.0	185.1	COMB
D	-21945.0				0.00	50949.32	0.0	0.0	COMB
D	-95006.1	39057.81	34330.11	66381.15	-32777.9	-50716.2	-21.2	754.6	
D	-17261.5				-37695.4	0.00	0.0	185.1	COMB
D	-21945.0				0.00	-50949.3	0.0	0.0	COMB
F	148035.5	15983.22	11503.53	2347.40	35519.18	51033.60	0.0	185.1	
F	-64999.5	15983.22	11503.53	2347.40	-35519.2	-51033.6	0.0	185.1	

Additional Design Data

M	periphery-O/-I [m2/m]	[m2/m]	deff [mm]	t-min [mm]	t-max [mm]	SMP [o/o]	thet-p [tm2/m]	thet-y [tm2/m]	thet-z [tm2/m]	thet-yz [tm2/m]
	51.205		19.8	0.8	300.0	0.0	24.344	1.690	22.653	
1	6.577		48.6	45.0	52.0	0.0	0.588	0.556	0.031	
30	16.329		600.0	50.0	300.0	0.0	21.683	0.004	21.679	
31	0.201		300.0	300.0	300.0	0.0	0.943		0.943	
**	28.098		0.8	0.8	0.8	0.0	0.000	0.000	0.000	

Cross section No. 256.1 = CS 1 - steel alone

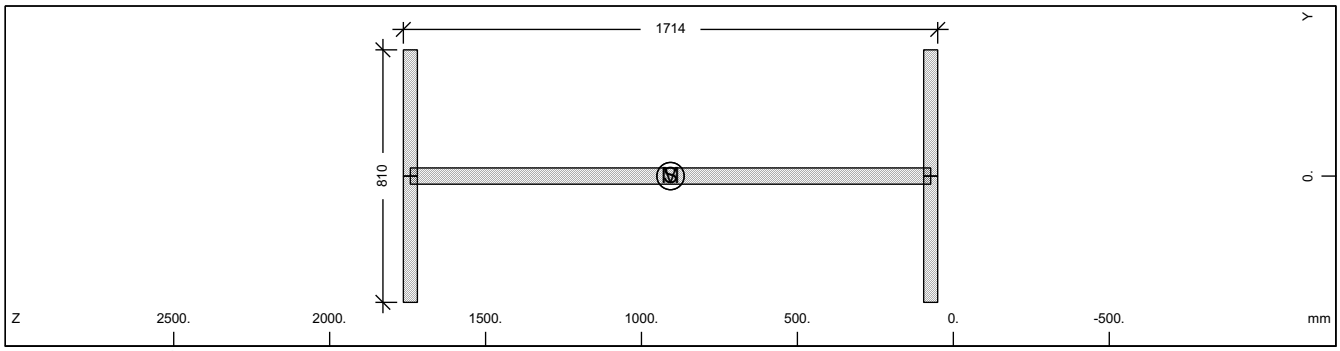

Cross section No. 256

Static properties of cross section

Mat NoR	A[cm2] It[cm4]	Ay/Az/Ayz [cm2]	Iy/Iz/Iyz [cm4]	ys/zs [mm]	modules [N/mm2]	gam [kN/m]
1	1596.71	607.50	7088169.5	0.0	210000	12.53
	6270.0	815.48	398580.9	906.8	80769	

Additional static properties of cross section

Alfa-T [1/°K]	ymin ymax [mm]	zmin zmax [mm]	hymin hzmin [mm]	AK AB [cm2]	MB	Tau-T Tau-B [1/m3]	Tau-Vy Tau-Vz [1/m2]
1.2E-05	-405.0	-856.8		9.424E+02		4.081E+02	2.058E+01
	405.0	856.8				1.255E+02	1.316E+01

Section values for warping

Wmin[cm2]	Wmax[cm2]	CM[cm6]	CMS[cm4]	ASwyy[cm6]	ASwzz[cm6]	ry[mm]	rz[mm]
-3379.07	3379.072774606703.		4228938.0	-0.65	-11.63	0.0	0.0

Design values of cross section

Mat NoR	A[cm2] It[cm4]	Ay/Az/Ayz [cm2]	Iy/Iz/Iyz [cm4]	ys/zs [mm]	modules [N/mm2]	gam [kN/m]
1	1596.71	607.50	7088169.5	0.0	182609	12.53
	6270.0	815.48	398580.9	906.8	70234	

Design forces and moments
(C/E = characteristic plastic/elastic, D=plast.Design, F=elast. Design)

	N[kN]	Vy[kN]	Vz[kN]	Mt[kNm]	My[kNm]	Mz[kNm]	y[mm]	z[mm]	BUCK
C	53489.9	14099.76	16782.63	753.59	32502.25	5323.24	0.0	906.8	c d
C	0.0				0.00	0.00	0.0	0.0	COMB
E	53489.9	9399.84	14695.46	473.92	27712.76	3296.90	0.0	906.8	
D	46512.9	12260.66	14593.59	655.30	28262.82	4628.91	0.0	906.8	

SOFiSTiK AG - www.sofistik.de

Composite bridge 38+50+38, b=14.25m, 2x2HL1100R HISTAR460 , slab 0.30m C30/37

Design forces and moments
(C/E = characteristic plastic/elastic, D=plast.Design, F=elast. Design)

	N[kN]	Vy[kN]	Vz[kN]	Mt[kNm]	My[kNm]	Mz[kNm]	y[mm]	z[mm]	BUCK
D	0.0				0.00	0.00	0.0	0.0	COMB
F	46512.9	8173.78	12778.66	412.11	24098.05	2866.87	0.0	906.8	

Additional Design Data

M	periphery-O/-I [m2/m]	[m2/m]	deff [mm]	t-min [mm]	t-max [mm]	SMP [o/o]	thet-p [tm2/m]	thet-y [tm2/m]	thet-z [tm2/m]	thet-yz [tm2/m]
	6.577		48.6	45.0	52.0	0.0	0.588	0.556	0.031	

Cross section No. 256.2 = CS 10 - prefab. slab C1

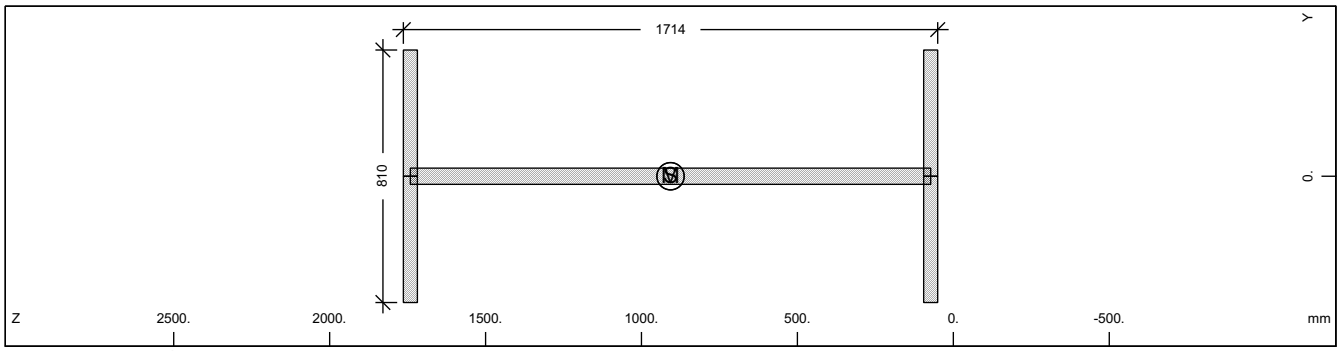

Cross section No. 256

Static properties of cross section

Mat NoR	A[cm2] It[cm4]	Ay/Az/Ayz [cm2]	Iy/Iz/Iyz [cm4]	ys/zs [mm]	modules [N/mm2]	gam [kN/m]
1	1596.71	607.50	7088169.5	0.0	210000	12.53
	6270.0	815.48	398580.9	906.8	80769	

Additional static properties of cross section

Alfa-T [1/°K]	ymin ymax [mm]	zmin zmax [mm]	hymin hzmin [mm]	AK AB [cm2]	MB	Tau-T Tau-B [1/m3]	Tau-Vy Tau-Vz [1/m2]
1.2E-05	-405.0	-856.8		9.424E+02		4.081E+02	2.058E+01
	405.0	856.8				1.255E+02	1.316E+01

Section values for warping

Wmin[cm2]	Wmax[cm2]	CM[cm6]	CMS[cm4]	ASwyy[cm6]	ASwzz[cm6]	ry[mm]	rz[mm]
-3379.07	3379.072774606703.		4228938.0	-0.65	-11.63	0.0	0.0

Design values of cross section

Mat NoR	A[cm2] It[cm4]	Ay/Az/Ayz [cm2]	Iy/Iz/Iyz [cm4]	ys/zs [mm]	modules [N/mm2]	gam [kN/m]
1	1596.71	607.50	7088169.5	0.0	182609	12.53
	6270.0	815.48	398580.9	906.8	70234	

Design forces and moments
(C/E = characteristic plastic/elastic, D=plast.Design, F=elast. Design)

	N[kN]	Vy[kN]	Vz[kN]	Mt[kNm]	My[kNm]	Mz[kNm]	y[mm]	z[mm]	BUCK
C	53489.9	14099.76	16782.63	753.59	32502.25	5323.24	0.0	906.8	c d
C	0.0				0.00	0.00	0.0	0.0	COMB
E	53489.9	9399.84	14695.46	473.92	27712.76	3296.90	0.0	906.8	
D	46512.9	12260.66	14593.59	655.30	28262.82	4628.91	0.0	906.8	
D	0.0				0.00	0.00	0.0	0.0	COMB
F	46512.9	8173.78	12778.66	412.11	24098.05	2866.87	0.0	906.8	

Additional Design Data

M	periphery-O/-I [m2/m]	[m2/m]	deff [mm]	t-min [mm]	t-max [mm]	SMP [o/o]	thet-p [tm2/m]	thet-y [tm2/m]	thet-z [tm2/m]	thet-yz [tm2/m]
	6.577		48.6	45.0	52.0	0.0	0.588	0.556	0.031	

SOFiSTiK AG - www.sofistik.de

Composite bridge 38+50+38, b=14.25m, 2x2HL1100R HISTAR460 , slab 0.30m C30/37

Cross section No. 256.3 = CS 20 - in-situ conc:C2

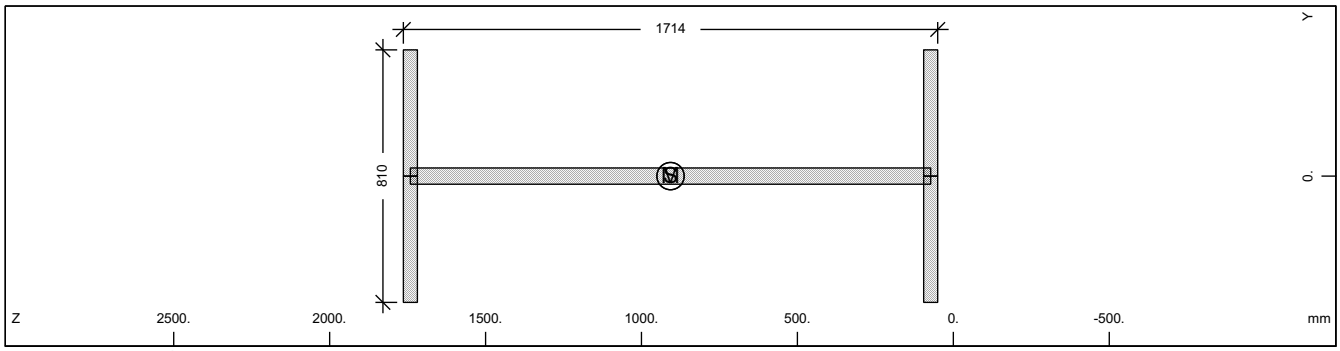

Cross section No. 256

Static properties of cross section

Mat NoR	A[cm2] It[cm4]	Ay/Az/Ayz [cm2]	Iy/Iz/Iyz [cm4]	ys/zs [mm]	modules [N/mm2]	gam [kN/m]
1	1596.71	607.50	7088169.5	0.0	210000	12.53
	6270.0	815.48	398580.9	906.8	80769	

Additional static properties of cross section

Alfa-T [1/°K]	ymin ymax [mm]	zmin zmax [mm]	hymin hzmin [mm]	AK AB [cm2]	MB	Tau-T Tau-B [1/m3]	Tau-Vy Tau-Vz [1/m2]
1.2E-05	-405.0	-856.8		9.424E+02		4.081E+02	2.058E+01
	405.0	856.8				1.255E+02	1.316E+01

Section values for warping

Wmin[cm2]	Wmax[cm2]	CM[cm6]	CMS[cm4]	ASwyy[cm6]	ASwzz[cm6]	ry[mm]	rz[mm]
-3379.07	3379.072774606703.		4228938.0	-0.65	-11.63	0.0	0.0

Design values of cross section

Mat NoR	A[cm2] It[cm4]	Ay/Az/Ayz [cm2]	Iy/Iz/Iyz [cm4]	ys/zs [mm]	modules [N/mm2]	gam [kN/m]
1	1596.71	607.50	7088169.5	0.0	182609	12.53
	6270.0	815.48	398580.9	906.8	70234	

Design forces and moments
(C/E = characteristic plastic/elastic, D=plast.Design, F=elast. Design)

	N[kN]	Vy[kN]	Vz[kN]	Mt[kNm]	My[kNm]	Mz[kNm]	y[mm]	z[mm]	BUCK
C	53489.9	14099.76	16782.63	753.59	32502.25	5323.24	0.0	906.8	c d
C	0.0				0.00	0.00	0.0	0.0	COMB
E	53489.9	9399.84	14695.46	473.92	27712.76	3296.90	0.0	906.8	
D	46512.9	12260.66	14593.59	655.30	28262.82	4628.91	0.0	906.8	
D	0.0				0.00	0.00	0.0	0.0	COMB
F	46512.9	8173.78	12778.66	412.11	24098.05	2866.87	0.0	906.8	

Additional Design Data

M	periphery-O/-I [m2/m] [m2/m]	deff [mm]	t-min [mm]	t-max [mm]	SMP [o/o]	thet-p [tm2/m]	thet-y [tm2/m]	thet-z [tm2/m]	thet-yz [tm2/m]
	6.577	48.6	45.0	52.0	0.0	0.588	0.556	0.031	

SOFiSTiK AG - www.sofistik.de

Composite bridge 38+50+38, b=14.25m, 2x2HL1100R HISTAR460 , slab 0.30m C30/37

Cross section No. 256.4 = CS 21 - reinf active:C2

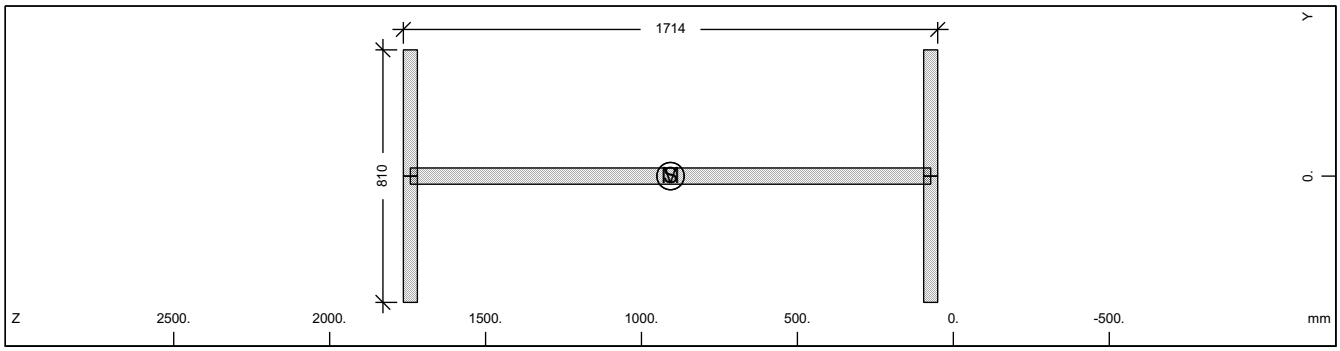

Cross section No. 256

Static properties of cross section

Mat NoR	A[cm2] It[cm4]	Ay/Az/Ayz [cm2]	Iy/Iz/Iyz [cm4]	ys/zs [mm]	modules [N/mm2]	gam [kN/m]
1	1596.71	607.50	7088169.5	0.0	210000	12.53
	6270.0	815.48	398580.9	906.8	80769	

Additional static properties of cross section

Alfa-T [1/°K]	ymin ymax [mm]	zmin zmax [mm]	hymin hzmin [mm]	AK AB [cm2]	MB	Tau-T Tau-B [1/m3]	Tau-Vy Tau-Vz [1/m2]
1.2E-05	-405.0	-856.8		9.424E+02		4.081E+02	2.058E+01
	405.0	856.8				1.255E+02	1.316E+01

Section values for warping

Wmin[cm2]	Wmax[cm2]	CM[cm6]	CMS[cm4]	ASwyy[cm6]	ASwzz[cm6]	ry[mm]	rz[mm]
-3379.07	3379.072774606703.		4228938.0	-0.65	-11.63	0.0	0.0

Design values of cross section

Mat NoR	A[cm2] It[cm4]	Ay/Az/Ayz [cm2]	Iy/Iz/Iyz [cm4]	ys/zs [mm]	modules [N/mm2]	gam [kN/m]
1	1596.71	607.50	7088169.5	0.0	182609	12.53
	6270.0	815.48	398580.9	906.8	70234	

Design forces and moments
(C/E = characteristic plastic/elastic, D=plast.Design, F=elast. Design)

	N[kN]	Vy[kN]	Vz[kN]	Mt[kNm]	My[kNm]	Mz[kNm]	y[mm]	z[mm]	BUCK
C	53489.9	14099.76	16782.63	753.59	32502.25	5323.24	0.0	906.8	c d
C	0.0				0.00	0.00	0.0	0.0	COMB
E	53489.9	9399.84	14695.46	473.92	27712.76	3296.90	0.0	906.8	
D	46512.9	12260.66	14593.59	655.30	28262.82	4628.91	0.0	906.8	
D	0.0				0.00	0.00	0.0	0.0	COMB
F	46512.9	8173.78	12778.66	412.11	24098.05	2866.87	0.0	906.8	

Additional Design Data

M	periphery-O/-I [m2/m] [m2/m]	deff [mm]	t-min [mm]	t-max [mm]	SMP [o/o]	thet-p [tm2/m]	thet-y [tm2/m]	thet-z [tm2/m]	thet-yz [tm2/m]
	6.577	48.6	45.0	52.0	0.0	0.588	0.556	0.031	

SOFiSTiK AG - www.sofistik.de

Composite bridge 38+50+38, b=14.25m, 2x2HL1100R HISTAR460 , slab 0.30m C30/37

Cross section No. 256.5 = CS 30 - in-situ conc:C3

Cross section No. 257 - VFT (251)

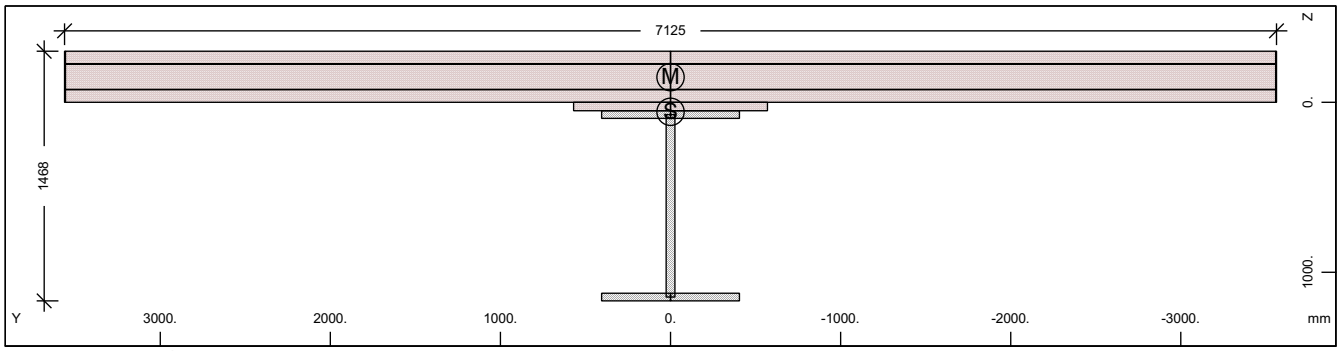

Cross section No. 257 - VFT (251)

Static properties of cross section

Mat NoR	A[cm2] It[cm4]	Ay/Az/Ayz [cm2]	Iy/Iz/Iyz [cm4]	ys/zs [mm]	y/z-sc [mm]	modules [N/mm2]	gam [kN/m]
1	4815.82	3118.65	8035554.0	0.0	0.0	210000	64.97
	6270.0	471.68145603753.		56.1	-147.8	80769	

Additional static properties of cross section

Alfa-T [1/°K]	ymin ymax [mm]	zmin zmax [mm]	hymin hzmin [mm]	AK AB [cm2]	MB	Tau-T Tau-B [1/m3]	Tau-Vy Tau-Vz [1/m2]
1.2E-05	-3562.5	-356.1		1.437E+04		4.747E+00	4.139E+00
	3562.5	1111.9		2.195E+04		1.255E+02	1.689E+01

Section values for warping

Wmin[cm2]	Wmax[cm2]	CM[cm6]	CMS[cm4]	ASwyy[cm6]	ASwzz[cm6]	ry[mm]	rz[mm]
-5237.89	5237.893708299497.		924103.7	5858.15	323.30	0.0	-2510.0

Partial cross sections

Mat NoR	A[cm2] It[cm4]	Ay/Az/Ayz [cm2]	Iy/Iz/Iyz [cm4]	ys/zs [mm]	modules [N/mm2]	gam [kN/m]
1	1286.96	0.12	2633627.3	0.0	210000	10.10
	9949.8	271.17	398580.9	609.0	80769	
30	21915.00	17819.13	170022.2	0.0	32837	54.79
	6408250.4	1141.50901077848.		-145.4	13682	
31	30.00	0.00	0.0	0.0	0	0.08
	9000.6	0.00	3802349.1	-150.0	0	
300	107.24	105.06	6032.1	0.0	200000	0.00
	0.2	7.51	4523914.0	-150.0	76923	

Design values of cross section

Mat NoR	A[cm2] It[cm4]	Ay/Az/Ayz [cm2]	Iy/Iz/Iyz [cm4]	ys/zs [mm]	modules [N/mm2]	gam [kN/m]
1	4016.25	2414.34	7640002.0	0.0	182609	64.97
	6270.0	426.56112727857.		96.2	70234	

Design forces and moments
(C/E = characteristic plastic/elastic, D=plast.Design, F=elast. Design)

	N[kN]	Vy[kN]	Vz[kN]	Mt[kNm]	My[kNm]	Mz[kNm]	y[mm]	z[mm]	BUCK
C	48475.0	53404.68	39592.08	99166.02	35244.07	70438.37	196.7	-98.3	c d
C	-31378.3				38220.88	0.00	0.0	56.1	COMB
C	-32917.5				0.00	72080.77	0.0	0.0	COMB
C	-114310.	53404.68	39592.08	99166.00	-21773.2	-70438.4	-197.	454.6	
C	-34456.7				-24953.5	0.00	0.0	56.1	COMB
C	-32917.5				0.00	-72080.8	0.0	0.0	COMB
E	161330.0	24280.53	11453.52	3556.84	24209.37	78525.45	0.0	56.1	
E	-92396.0	24280.53	11453.52	3556.84	-24209.4	-78525.5	0.0	56.1	
D	42152.2	39092.05	29120.55	66245.72	29597.63	50563.77	93.7	-69.6	

SOFiSTiK AG - www.sofistik.de

Composite bridge 38+50+38, b=14.25m, 2x2HL1100R HISTAR460 , slab 0.30m C30/37

Design forces and moments
(C/E = characteristic plastic/elastic, D=plast.Design, F=elast. Design)

	N[kN]	Vy[kN]	Vz[kN]	Mt[kNm]	My[kNm]	Mz[kNm]	y[mm]	z[mm]	BUCK
D	-13927.7				30543.60	0.00	0.0	56.1	COMB
D	-21945.0				0.00	51041.69	0.0	0.0	COMB
D	-86042.2	39092.05	29120.55	66245.73	-18933.3	-50563.8	-93.7	453.8	
D	-29962.3				-21698.7	0.00	0.0	56.1	COMB
D	-21945.0				0.00	-51041.7	0.0	0.0	COMB
F	140287.0	16187.02	7710.96	2371.23	21051.62	52350.30	0.0	56.1	
F	-61597.3	16187.02	7710.96	2371.23	-21051.6	-52350.3	0.0	56.1	

Additional Design Data

M	periphery-O/-I [m2/m]	[m2/m]	deff [mm]	t-min [mm]	t-max [mm]	SMP [o/o]	thet-p [tm2/m]	thet-y [tm2/m]	thet-z [tm2/m]	thet-yz [tm2/m]
	50.376		19.1	0.8	300.0	0.0	23.350	0.697	22.653	
1	5.386		47.8	45.0	52.0	0.0	0.238	0.207	0.031	
30	16.510		600.0	50.0	300.0	0.0	22.531	0.004	22.527	
31	0.020		300.0	300.0	300.0	0.0	0.095		0.095	
**	28.460		0.8	0.8	0.8	0.0	0.000	0.000	0.000	

Cross section No. 257.1 = CS 1 - steel alone

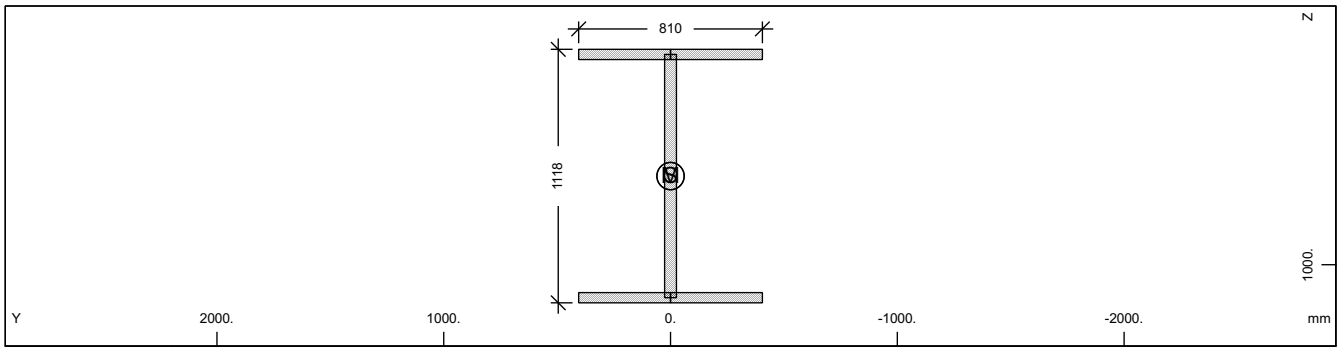

Cross section No. 257

Static properties of cross section

Mat NoR	A[cm2] It[cm4]	Ay/Az/Ayz [cm2]	Iy/Iz/Iyz [cm4]	ys/zs [mm]	modules [N/mm2]	gam [kN/m]
1	1286.96	607.50	2633627.3	0.0	210000	10.10
	6270.0	506.98	398580.9	609.0	80769	

Additional static properties of cross section

Alfa-T [1/°K]	ymin ymax [mm]	zmin zmax [mm]	hymin hzmin [mm]	AK AB [cm2]	MB	Tau-T Tau-B [1/m3]	Tau-Vy Tau-Vz [1/m2]
1.2E-05	-405.0	-559.0		7.359E+02		5.226E+02	2.058E+01
	405.0	559.0				1.255E+02	1.974E+01

Section values for warping

Wmin[cm2]	Wmax[cm2]	CM[cm6]	CMS[cm4]	ASwyy[cm6]	ASwzz[cm6]	ry[mm]	rz[mm]
-2172.83	2172.831147244363.	1748581.4		-0.16	-1.04	0.0	0.0

Design values of cross section

Mat NoR	A[cm2] It[cm4]	Ay/Az/Ayz [cm2]	Iy/Iz/Iyz [cm4]	ys/zs [mm]	modules [N/mm2]	gam [kN/m]
1	1286.96	607.50	2633627.3	0.0	182609	10.10
	6270.0	506.98	398580.9	609.0	70234	

Design forces and moments
(C/E = characteristic plastic/elastic, D=plast.Design, F=elast. Design)

	N[kN]	Vy[kN]	Vz[kN]	Mt[kNm]	My[kNm]	Mz[kNm]	y[mm]	z[mm]	BUCK
C	43113.2	14099.76	10791.64	597.83	18116.18	5188.35	0.0	609.0	c d
C	0.0				0.00	0.00	0.0	0.0	COMB
E	43113.2	9399.84	9796.03	370.08	15782.92	3296.90	0.0	609.0	
D	37489.7	12260.66	9384.03	519.85	15753.20	4511.61	0.0	609.0	

SOFiSTiK AG - www.sofistik.de

Composite bridge 38+50+38, b=14.25m, 2x2HL1100R HISTAR460 , slab 0.30m C30/37

Design forces and moments
(C/E = characteristic plastic/elastic, D=plast.Design, F=elast. Design)

	N[kN]	Vy[kN]	Vz[kN]	Mt[kNm]	My[kNm]	Mz[kNm]	y[mm]	z[mm]	BUCK
D	0.0				0.00	0.00	0.0	0.0	COMB
F	37489.7	8173.78	8518.29	321.81	13724.27	2866.87	0.0	609.0	

Additional Design Data

M	periphery-O/-I [m2/m]	[m2/m]	deff [mm]	t-min [mm]	t-max [mm]	SMP [o/o]	thet-p [tm2/m]	thet-y [tm2/m]	thet-z [tm2/m]	thet-yz [tm2/m]
	5.386		47.8	45.0	52.0	0.0	0.238	0.207	0.031	

Cross section No. 257.2 = CS 10 - prefab. slab C1

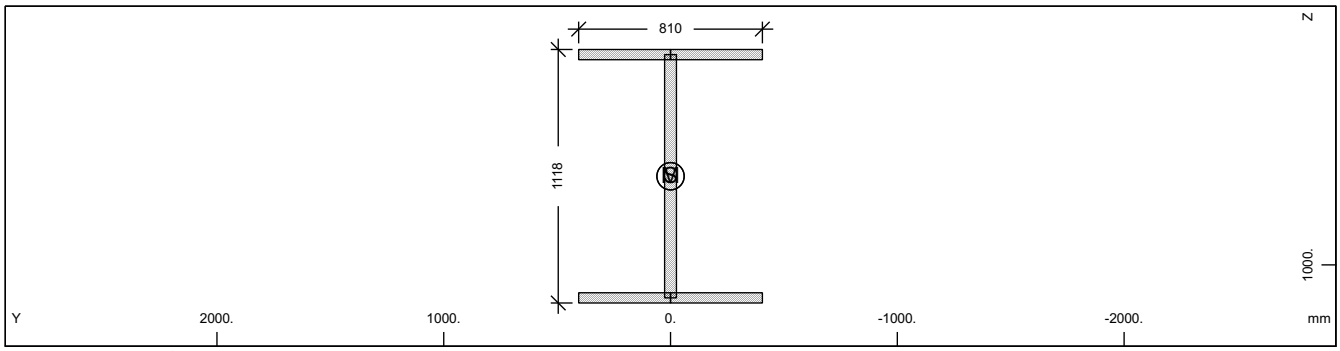

Cross section No. 257

Static properties of cross section

Mat NoR	A[cm2] It[cm4]	Ay/Az/Ayz [cm2]	Iy/Iz/Iyz [cm4]	ys/zs [mm]	modules [N/mm2]	gam [kN/m]
1	1286.96	607.50	2633627.3	0.0	210000	10.10
	6270.0	506.98	398580.9	609.0	80769	

Additional static properties of cross section

Alfa-T [1/°K]	ymin ymax [mm]	zmin zmax [mm]	hymin hzmin [mm]	AK AB [cm2]	MB	Tau-T Tau-B [1/m3]	Tau-Vy Tau-Vz [1/m2]
1.2E-05	-405.0	-559.0		7.359E+02		5.226E+02	2.058E+01
	405.0	559.0				1.255E+02	1.974E+01

Section values for warping

Wmin[cm2]	Wmax[cm2]	CM[cm6]	CMS[cm4]	ASwyy[cm6]	ASwzz[cm6]	ry[mm]	rz[mm]
-2172.83	2172.831147244363.		1748581.4	-0.16	-1.04	0.0	0.0

Design values of cross section

Mat NoR	A[cm2] It[cm4]	Ay/Az/Ayz [cm2]	Iy/Iz/Iyz [cm4]	ys/zs [mm]	modules [N/mm2]	gam [kN/m]
1	1286.96	607.50	2633627.3	0.0	182609	10.10
	6270.0	506.98	398580.9	609.0	70234	

Design forces and moments
(C/E = characteristic plastic/elastic, D=plast.Design, F=elast. Design)

	N[kN]	Vy[kN]	Vz[kN]	Mt[kNm]	My[kNm]	Mz[kNm]	y[mm]	z[mm]	BUCK
C	43113.2	14099.76	10791.64	597.83	18116.18	5188.35	0.0	609.0	c d
C	0.0				0.00	0.00	0.0	0.0	COMB
E	43113.2	9399.84	9796.03	370.08	15782.92	3296.90	0.0	609.0	
D	37489.7	12260.66	9384.03	519.85	15753.20	4511.61	0.0	609.0	
D	0.0				0.00	0.00	0.0	0.0	COMB
F	37489.7	8173.78	8518.29	321.81	13724.27	2866.87	0.0	609.0	

Additional Design Data

M	periphery-O/-I [m2/m]	[m2/m]	deff [mm]	t-min [mm]	t-max [mm]	SMP [o/o]	thet-p [tm2/m]	thet-y [tm2/m]	thet-z [tm2/m]	thet-yz [tm2/m]
	5.386		47.8	45.0	52.0	0.0	0.238	0.207	0.031	

SOFiSTiK AG - www.sofistik.de

Composite bridge 38+50+38, b=14.25m, 2x2HL1100R HISTAR460 , slab 0.30m C30/37

Cross section No. 257.3 = CS 20 - in-situ conc:C2

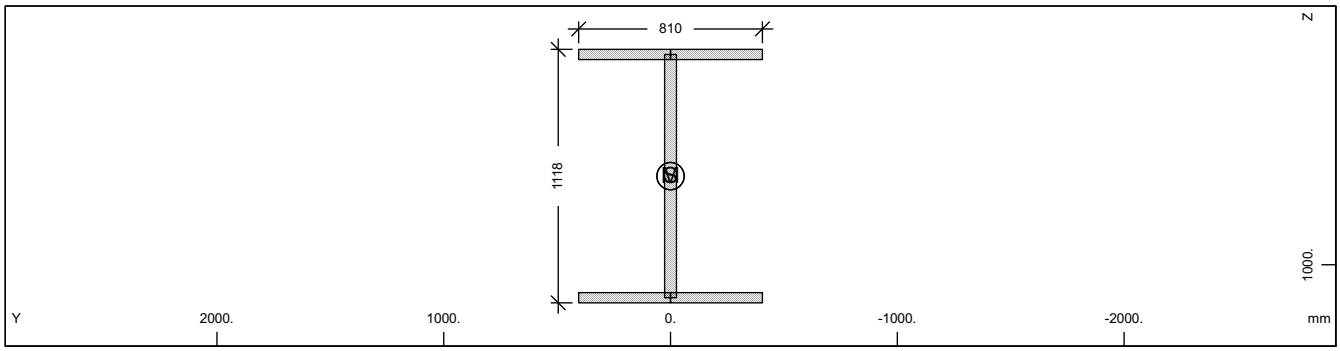

Cross section No. 257

Static properties of cross section

Mat NoR	A[cm2] It[cm4]	Ay/Az/Ayz [cm2]	Iy/Iz/Iyz [cm4]	ys/zs [mm]	modules [N/mm2]	gam [kN/m]
1	1286.96	607.50	2633627.3	0.0	210000	10.10
	6270.0	506.98	398580.9	609.0	80769	

Additional static properties of cross section

Alfa-T [1/°K]	ymin ymax [mm]	zmin zmax [mm]	hymin hzmin [mm]	AK AB [cm2]	MB	Tau-T Tau-B [1/m3]	Tau-Vy Tau-Vz [1/m2]
1.2E-05	-405.0	-559.0		7.359E+02		5.226E+02	2.058E+01
	405.0	559.0				1.255E+02	1.974E+01

Section values for warping

Wmin[cm2]	Wmax[cm2]	CM[cm6]	CMS[cm4]	ASwyy[cm6]	ASwzz[cm6]	ry[mm]	rz[mm]
-2172.83	2172.831147244363.		1748581.4	-0.16	-1.04	0.0	0.0

Design values of cross section

Mat NoR	A[cm2] It[cm4]	Ay/Az/Ayz [cm2]	Iy/Iz/Iyz [cm4]	ys/zs [mm]	modules [N/mm2]	gam [kN/m]
1	1286.96	607.50	2633627.3	0.0	182609	10.10
	6270.0	506.98	398580.9	609.0	70234	

Design forces and moments
(C/E = characteristic plastic/elastic, D=plast.Design, F=elast. Design)

	N[kN]	Vy[kN]	Vz[kN]	Mt[kNm]	My[kNm]	Mz[kNm]	y[mm]	z[mm]	BUCK
C	43113.2	14099.76	10791.64	597.83	18116.18	5188.35	0.0	609.0	c d
C	0.0				0.00	0.00	0.0	0.0	COMB
E	43113.2	9399.84	9796.03	370.08	15782.92	3296.90	0.0	609.0	
D	37489.7	12260.66	9384.03	519.85	15753.20	4511.61	0.0	609.0	
D	0.0				0.00	0.00	0.0	0.0	COMB
F	37489.7	8173.78	8518.29	321.81	13724.27	2866.87	0.0	609.0	

Additional Design Data

M	periphery-O/-I [m2/m] [m2/m]	deff [mm]	t-min [mm]	t-max [mm]	SMP [o/o]	thet-p [tm2/m]	thet-y [tm2/m]	thet-z [tm2/m]	thet-yz [tm2/m]
	5.386	47.8	45.0	52.0	0.0	0.238	0.207	0.031	

SOFiSTiK AG - www.sofistik.de

Composite bridge 38+50+38, b=14.25m, 2x2HL1100R HISTAR460 , slab 0.30m C30/37

Cross section No. 257.4 = CS 21 - reinf active:C2

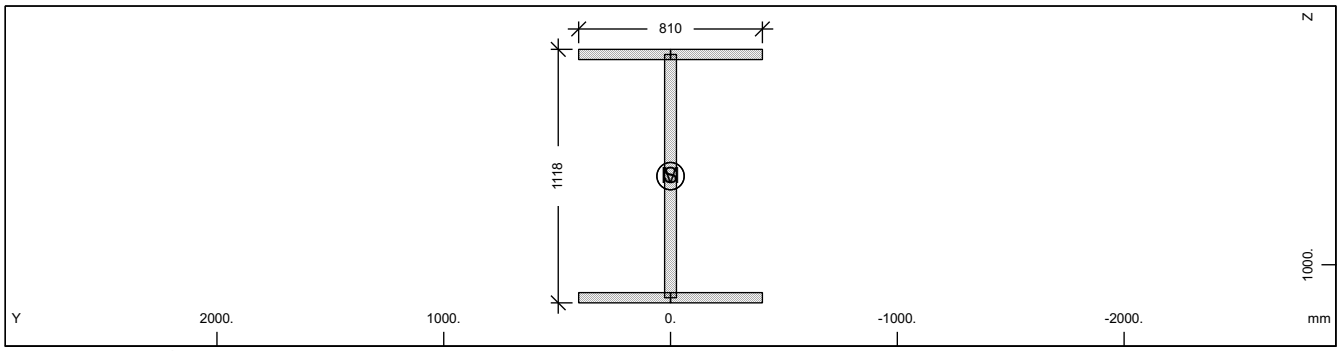

Cross section No. 257

Static properties of cross section

Mat NoR	A[cm2] It[cm4]	Ay/Az/Ayz [cm2]	Iy/Iz/Iyz [cm4]	ys/zs [mm]	modules [N/mm2]	gam [kN/m]
1	1286.96	607.50	2633627.3	0.0	210000	10.10
	6270.0	506.98	398580.9	609.0	80769	

Additional static properties of cross section

Alfa-T [1/°K]	ymin ymax [mm]	zmin zmax [mm]	hymin hzmin [mm]	AK AB [cm2]	MB	Tau-T Tau-B [1/m3]	Tau-Vy Tau-Vz [1/m2]
1.2E-05	-405.0	-559.0		7.359E+02		5.226E+02	2.058E+01
	405.0	559.0				1.255E+02	1.974E+01

Section values for warping

Wmin[cm2]	Wmax[cm2]	CM[cm6]	CMS[cm4]	ASwyy[cm6]	ASwzz[cm6]	ry[mm]	rz[mm]
-2172.83	2172.831	147244363.	1748581.4	-0.16	-1.04	0.0	0.0

Design values of cross section

Mat NoR	A[cm2] It[cm4]	Ay/Az/Ayz [cm2]	Iy/Iz/Iyz [cm4]	ys/zs [mm]	modules [N/mm2]	gam [kN/m]
1	1286.96	607.50	2633627.3	0.0	182609	10.10
	6270.0	506.98	398580.9	609.0	70234	

Design forces and moments
(C/E = characteristic plastic/elastic, D=plast.Design, F=elast. Design)

	N[kN]	Vy[kN]	Vz[kN]	Mt[kNm]	My[kNm]	Mz[kNm]	y[mm]	z[mm]	BUCK
C	43113.2	14099.76	10791.64	597.83	18116.18	5188.35	0.0	609.0	c d
C	0.0				0.00	0.00	0.0	0.0	COMB
E	43113.2	9399.84	9796.03	370.08	15782.92	3296.90	0.0	609.0	
D	37489.7	12260.66	9384.03	519.85	15753.20	4511.61	0.0	609.0	
D	0.0				0.00	0.00	0.0	0.0	COMB
F	37489.7	8173.78	8518.29	321.81	13724.27	2866.87	0.0	609.0	

Additional Design Data

M	periphery-O/-I [m2/m] [m2/m]	deff [mm]	t-min [mm]	t-max [mm]	SMP [o/o]	thet-p [tm2/m]	thet-y [tm2/m]	thet-z [tm2/m]	thet-yz [tm2/m]
	5.386	47.8	45.0	52.0	0.0	0.238	0.207	0.031	

SOFiSTiK AG - www.sofistik.de

Composite bridge 38+50+38, b=14.25m, 2x2HL1100R HISTAR460 , slab 0.30m C30/37

Cross section No. 257.5 = CS 30 - in-situ conc:C3

Cross section No. 258 - VFT (251)

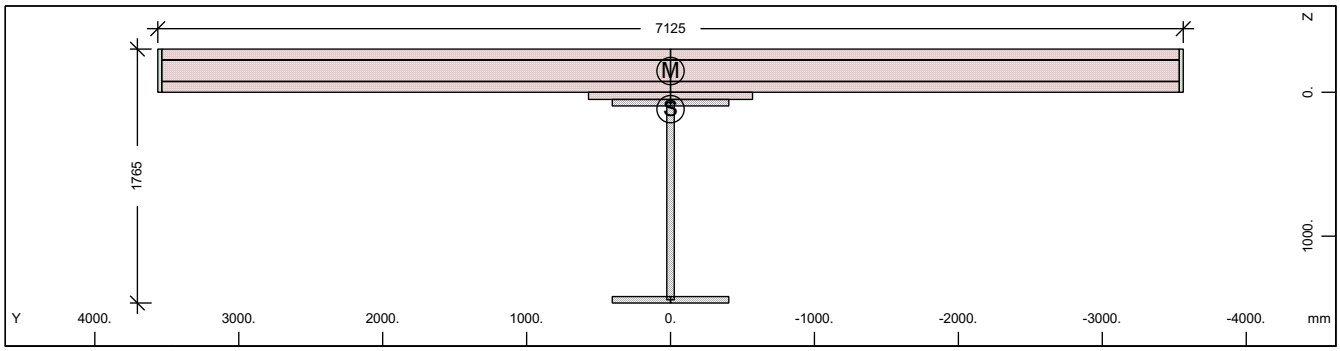

Cross section No. 258 - VFT (251)

Static properties of cross section

Mat NoR	A[cm2] It[cm4]	Ay/Az/Ayz [cm2]	Iy/Iz/Iyz [cm4]	ys/zs [mm]	y/z-sc [mm]	modules [N/mm2]	gam [kN/m]
1	4948.34	3099.29	12893528.	0.0	0.0	210000	66.18
	6270.0	616.38	142862130.	117.4	-147.4	80769	

Additional static properties of cross section

Alfa-T [1/°K]	ymin ymax [mm]	zmin zmax [mm]	hymin hzmin [mm]	AK AB [cm2]	MB	Tau-T Tau-B [1/m3]	Tau-Vy Tau-Vz [1/m2]
1.2E-05	-3562.5	-417.4		1.430E+04		4.771E+00	4.165E+00
	3562.5	1347.3		2.195E+04		1.255E+02	1.401E+01

Section values for warping

Wmin[cm2]	Wmax[cm2]	CM[cm6]	CMS[cm4]	ASwyy[cm6]	ASwzz[cm6]	ry[mm]	rz[mm]
-6437.94	6437.945408585559.		1857469.8	3061.47	276.30	0.0	-1487.5

Partial cross sections

Mat NoR	A[cm2] It[cm4]	Ay/Az/Ayz [cm2]	Iy/Iz/Iyz [cm4]	ys/zs [mm]	modules [N/mm2]	gam [kN/m]
1	1441.28	0.12	4533150.8	0.0	210000	11.31
	11340.7	396.94	398580.9	757.4	80769	
30	21779.72	17708.46	169994.0	0.0	32837	54.45
	6367665.6	1251.34	884064966.	-145.4	13682	
31	165.29	0.02	0.0	0.0	0	0.41
	49585.7	0.00	20815279.	-150.0	0	
300	106.56	104.41	5993.9	0.0	200000	0.00
	0.2	7.84	4438440.9	-150.0	76923	

Design values of cross section

Mat NoR	A[cm2] It[cm4]	Ay/Az/Ayz [cm2]	Iy/Iz/Iyz [cm4]	ys/zs [mm]	modules [N/mm2]	gam [kN/m]
1	4153.70	2399.35	12233227.	0.0	182609	66.18
	6270.0	566.92	110606957.	167.7	70234	

Design forces and moments
(C/E = characteristic plastic/elastic, D=plast.Design, F=elast. Design)

	N[kN]	Vy[kN]	Vz[kN]	Mt[kNm]	My[kNm]	Mz[kNm]	y[mm]	z[mm]	BUCK
C	53610.7	53385.06	42576.77	99243.62	45999.96	71150.14	125.2	-75.3	c d
C	-48867.3				50763.46	0.00	0.0	117.4	COMB
C	-32917.5				0.00	72027.47	0.0	0.0	COMB
C	-119446.	53385.06	42576.77	99243.62	-29324.0	-71150.1	-125.	604.2	
C	-16967.7				-33455.8	0.00	0.0	117.4	COMB
C	-32917.5				0.00	-72027.5	0.0	0.0	COMB
E	165769.3	24128.23	13806.48	3539.04	32058.61	77538.31	0.0	117.4	
E	-94938.4	24128.23	13806.48	3539.04	-32058.6	-77538.3	0.0	117.4	
D	46618.0	39074.99	31715.93	66313.20	38803.92	50714.94	25.6	-37.9	

SOFiSTiK AG - www.sofistik.de

Composite bridge 38+50+38, b=14.25m, 2x2HL1100R HISTAR460 , slab 0.30m C30/37

Design forces and moments
(C/E = characteristic plastic/elastic, D=plast.Design, F=elast. Design)

	N[kN]	Vy[kN]	Vz[kN]	Mt[kNm]	My[kNm]	Mz[kNm]	y[mm]	z[mm]	BUCK
D	-29135.5				40630.43	0.00	0.0	117.4	COMB
D	-21945.0				0.00	50995.33	0.0	0.0	COMB
D	-90508.0	39074.99	31715.93	66313.18	-25499.1	-50714.9	-25.6	603.8	
D	-14754.5				-29092.0	0.00	0.0	117.4	COMB
D	-21945.0				0.00	-50995.3	0.0	0.0	COMB
F	144147.2	16085.48	9594.33	2359.36	27877.05	51692.21	0.0	117.4	
F	-63292.3	16085.48	9594.33	2359.36	-27877.0	-51692.2	0.0	117.4	

Additional Design Data

M	periphery-O/-I [m2/m]	[m2/m]	deff [mm]	t-min [mm]	t-max [mm]	SMP [o/o]	thet-p [tm2/m]	thet-y [tm2/m]	thet-z [tm2/m]	thet-yz [tm2/m]
	50.789		19.5	0.8	300.0	0.0	23.778	1.125	22.653	
1	5.980		48.2	45.0	52.0	0.0	0.387	0.356	0.031	
30	16.420		600.0	50.0	300.0	0.0	22.106	0.004	22.102	
31	0.110		300.0	300.0	300.0	0.0	0.520		0.520	
**	28.280		0.8	0.8	0.8	0.0	0.000	0.000	0.000	

Cross section No. 258.1 = CS 1 - steel alone

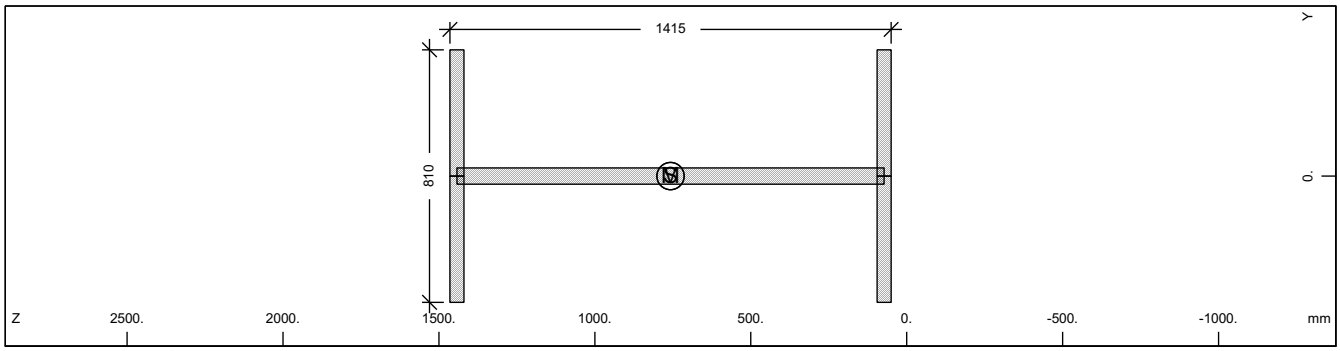

Cross section No. 258

Static properties of cross section

Mat NoR	A[cm2] It[cm4]	Ay/Az/Ayz [cm2]	Iy/Iz/Iyz [cm4]	ys/zs [mm]	modules [N/mm2]	gam [kN/m]
1	1441.28	607.50	4533150.8	0.0	210000	11.31
	6270.0	661.43	398580.9	757.4	80769	

Additional static properties of cross section

Alfa-T [1/°K]	ymin ymax [mm]	zmin zmax [mm]	hymin hzmin [mm]	AK AB [cm2]	MB	Tau-T Tau-B [1/m3]	Tau-Vy Tau-Vz [1/m2]
1.2E-05	-405.0	-707.4		8.388E+02		4.585E+02	2.058E+01
	405.0	707.4				1.255E+02	1.576E+01

Section values for warping

Wmin[cm2]	Wmax[cm2]	CM[cm6]	CMS[cm4]	ASwyy[cm6]	ASwzz[cm6]	ry[mm]	rz[mm]
-2773.77	2773.771869597363.	2849561.0		-0.56	-6.37	0.0	0.0

Design values of cross section

Mat NoR	A[cm2] It[cm4]	Ay/Az/Ayz [cm2]	Iy/Iz/Iyz [cm4]	ys/zs [mm]	modules [N/mm2]	gam [kN/m]
1	1441.28	607.50	4533150.8	0.0	182609	11.31
	6270.0	661.43	398580.9	757.4	70234	

Design forces and moments
(C/E = characteristic plastic/elastic, D=plast.Design, F=elast. Design)

	N[kN]	Vy[kN]	Vz[kN]	Mt[kNm]	My[kNm]	Mz[kNm]	y[mm]	z[mm]	BUCK
C	48282.8	14099.76	13776.32	675.43	24896.94	5255.55	0.0	757.4	c d
C	0.0				0.00	0.00	0.0	0.0	COMB
E	48282.8	9399.84	12269.21	421.82	21467.97	3296.90	0.0	757.4	
D	41985.0	12260.66	11979.41	587.33	21649.51	4570.04	0.0	757.4	

SOFiSTiK AG - www.sofistik.de

Composite bridge 38+50+38, b=14.25m, 2x2HL1100R HISTAR460 , slab 0.30m C30/37

Design forces and moments
(C/E = characteristic plastic/elastic, D=plast.Design, F=elast. Design)

	N[kN]	Vy[kN]	Vz[kN]	Mt[kNm]	My[kNm]	Mz[kNm]	y[mm]	z[mm]	BUCK
D	0.0				0.00	0.00	0.0	0.0	COMB
F	41985.0	8173.78	10668.88	366.80	18667.80	2866.87	0.0	757.4	

Additional Design Data

M	periphery-O/-I [m2/m]	[m2/m]	deff [mm]	t-min [mm]	t-max [mm]	SMP [o/o]	thet-p [tm2/m]	thet-y [tm2/m]	thet-z [tm2/m]	thet-yz [tm2/m]
	5.980		48.2	45.0	52.0	0.0	0.387	0.356	0.031	

Cross section No. 258.2 = CS 10 - prefab. slab C1

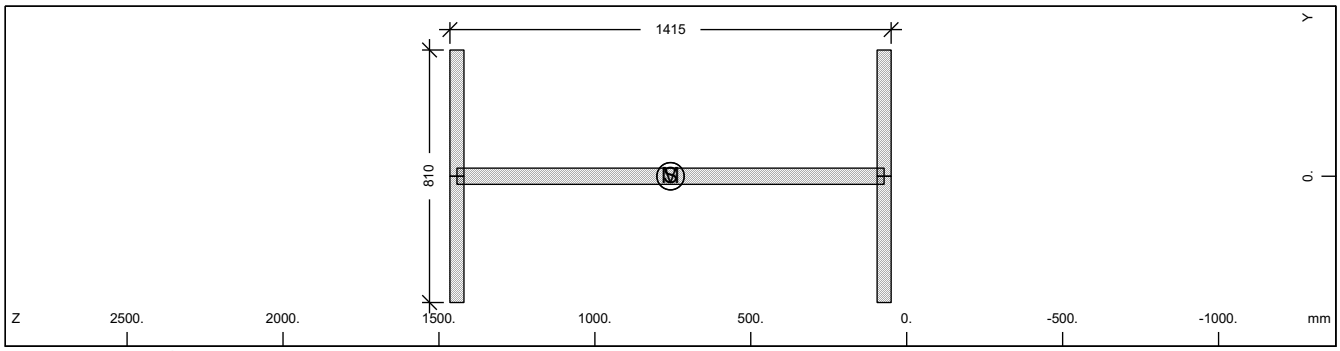

Cross section No. 258

Static properties of cross section

Mat NoR	A[cm2] It[cm4]	Ay/Az/Ayz [cm2]	Iy/Iz/Iyz [cm4]	ys/zs [mm]	modules [N/mm2]	gam [kN/m]
1	1441.28	607.50	4533150.8	0.0	210000	11.31
	6270.0	661.43	398580.9	757.4	80769	

Additional static properties of cross section

Alfa-T [1/°K]	ymin ymax [mm]	zmin zmax [mm]	hymin hzmin [mm]	AK AB [cm2]	MB	Tau-T Tau-B [1/m3]	Tau-Vy Tau-Vz [1/m2]
1.2E-05	-405.0	-707.4		8.388E+02		4.585E+02	2.058E+01
	405.0	707.4				1.255E+02	1.576E+01

Section values for warping

Wmin[cm2]	Wmax[cm2]	CM[cm6]	CMS[cm4]	ASwyy[cm6]	ASwzz[cm6]	ry[mm]	rz[mm]
-2773.77	2773.771869597363.		2849561.0	-0.56	-6.37	0.0	0.0

Design values of cross section

Mat NoR	A[cm2] It[cm4]	Ay/Az/Ayz [cm2]	Iy/Iz/Iyz [cm4]	ys/zs [mm]	modules [N/mm2]	gam [kN/m]
1	1441.28	607.50	4533150.8	0.0	182609	11.31
	6270.0	661.43	398580.9	757.4	70234	

Design forces and moments
(C/E = characteristic plastic/elastic, D=plast.Design, F=elast. Design)

	N[kN]	Vy[kN]	Vz[kN]	Mt[kNm]	My[kNm]	Mz[kNm]	y[mm]	z[mm]	BUCK
C	48282.8	14099.76	13776.32	675.43	24896.94	5255.55	0.0	757.4	c d
C	0.0				0.00	0.00	0.0	0.0	COMB
E	48282.8	9399.84	12269.21	421.82	21467.97	3296.90	0.0	757.4	
D	41985.0	12260.66	11979.41	587.33	21649.51	4570.04	0.0	757.4	
D	0.0				0.00	0.00	0.0	0.0	COMB
F	41985.0	8173.78	10668.88	366.80	18667.80	2866.87	0.0	757.4	

Additional Design Data

M	periphery-O/-I [m2/m]	[m2/m]	deff [mm]	t-min [mm]	t-max [mm]	SMP [o/o]	thet-p [tm2/m]	thet-y [tm2/m]	thet-z [tm2/m]	thet-yz [tm2/m]
	5.980		48.2	45.0	52.0	0.0	0.387	0.356	0.031	

SOFiSTiK AG - www.sofistik.de

Composite bridge 38+50+38, b=14.25m, 2x2HL1100R HISTAR460 , slab 0.30m C30/37

Cross section No. 258.3 = CS 20 - in-situ conc:C2

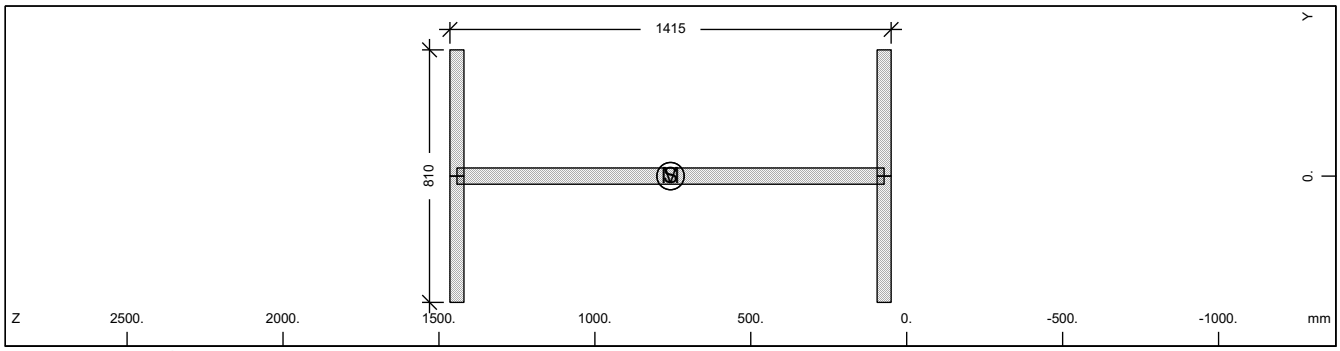

Cross section No. 258

Static properties of cross section

Mat NoR	A[cm2] It[cm4]	Ay/Az/Ayz [cm2]	Iy/Iz/Iyz [cm4]	ys/zs [mm]	modules [N/mm2]	gam [kN/m]
1	1441.28	607.50	4533150.8	0.0	210000	11.31
	6270.0	661.43	398580.9	757.4	80769	

Additional static properties of cross section

Alfa-T [1/°K]	ymin ymax [mm]	zmin zmax [mm]	hymin hzmin [mm]	AK AB [cm2]	MB	Tau-T Tau-B [1/m3]	Tau-Vy Tau-Vz [1/m2]
1.2E-05	-405.0	-707.4		8.388E+02		4.585E+02	2.058E+01
	405.0	707.4				1.255E+02	1.576E+01

Section values for warping

Wmin[cm2]	Wmax[cm2]	CM[cm6]	CMS[cm4]	ASwyy[cm6]	ASwzz[cm6]	ry[mm]	rz[mm]
-2773.77	2773.771869597363.		2849561.0	-0.56	-6.37	0.0	0.0

Design values of cross section

Mat NoR	A[cm2] It[cm4]	Ay/Az/Ayz [cm2]	Iy/Iz/Iyz [cm4]	ys/zs [mm]	modules [N/mm2]	gam [kN/m]
1	1441.28	607.50	4533150.8	0.0	182609	11.31
	6270.0	661.43	398580.9	757.4	70234	

Design forces and moments
(C/E = characteristic plastic/elastic, D=plast.Design, F=elast. Design)

	N[kN]	Vy[kN]	Vz[kN]	Mt[kNm]	My[kNm]	Mz[kNm]	y[mm]	z[mm]	BUCK
C	48282.8	14099.76	13776.32	675.43	24896.94	5255.55	0.0	757.4	c d
C	0.0				0.00	0.00	0.0	0.0	COMB
E	48282.8	9399.84	12269.21	421.82	21467.97	3296.90	0.0	757.4	
D	41985.0	12260.66	11979.41	587.33	21649.51	4570.04	0.0	757.4	
D	0.0				0.00	0.00	0.0	0.0	COMB
F	41985.0	8173.78	10668.88	366.80	18667.80	2866.87	0.0	757.4	

Additional Design Data

M	periphery-O/-I [m2/m] [m2/m]	deff [mm]	t-min [mm]	t-max [mm]	SMP [o/o]	thet-p [tm2/m]	thet-y [tm2/m]	thet-z [tm2/m]	thet-yz [tm2/m]
	5.980	48.2	45.0	52.0	0.0	0.387	0.356	0.031	

SOFiSTiK AG - www.sofistik.de

Composite bridge 38+50+38, b=14.25m, 2x2HL1100R HISTAR460 , slab 0.30m C30/37

Cross section No. 258.4 = CS 21 - reinf active:C2

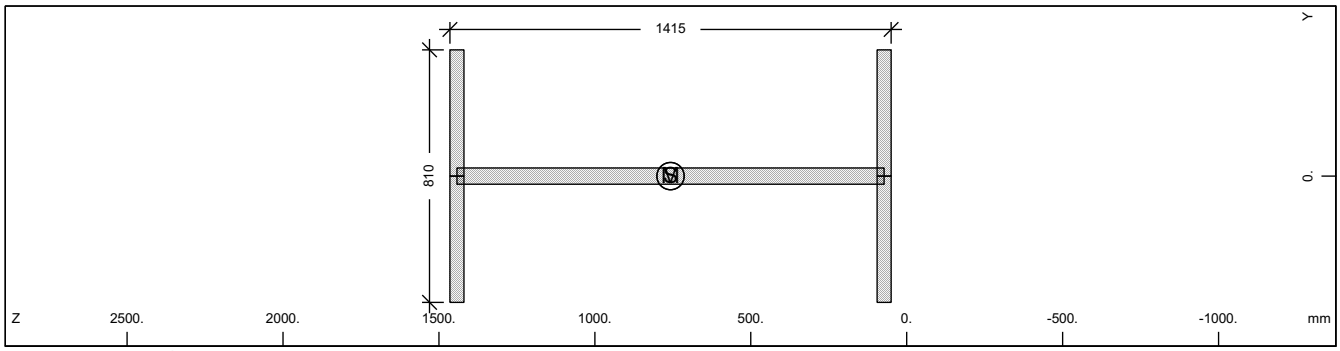

Cross section No. 258

Static properties of cross section

Mat NoR	A[cm2] It[cm4]	Ay/Az/Ayz [cm2]	Iy/Iz/Iyz [cm4]	ys/zs [mm]	modules [N/mm2]	gam [kN/m]
1	1441.28	607.50	4533150.8	0.0	210000	11.31
	6270.0	661.43	398580.9	757.4	80769	

Additional static properties of cross section

Alfa-T [1/°K]	ymin ymax [mm]	zmin zmax [mm]	hymin hzmin [mm]	AK AB [cm2]	MB	Tau-T Tau-B [1/m3]	Tau-Vy Tau-Vz [1/m2]
1.2E-05	-405.0	-707.4		8.388E+02		4.585E+02	2.058E+01
	405.0	707.4				1.255E+02	1.576E+01

Section values for warping

Wmin[cm2]	Wmax[cm2]	CM[cm6]	CMS[cm4]	ASwyy[cm6]	ASwzz[cm6]	ry[mm]	rz[mm]
-2773.77	2773.771869597363.		2849561.0	-0.56	-6.37	0.0	0.0

Design values of cross section

Mat NoR	A[cm2] It[cm4]	Ay/Az/Ayz [cm2]	Iy/Iz/Iyz [cm4]	ys/zs [mm]	modules [N/mm2]	gam [kN/m]
1	1441.28	607.50	4533150.8	0.0	182609	11.31
	6270.0	661.43	398580.9	757.4	70234	

Design forces and moments
(C/E = characteristic plastic/elastic, D=plast.Design, F=elast. Design)

	N[kN]	Vy[kN]	Vz[kN]	Mt[kNm]	My[kNm]	Mz[kNm]	y[mm]	z[mm]	BUCK
C	48282.8	14099.76	13776.32	675.43	24896.94	5255.55	0.0	757.4	c d
C	0.0				0.00	0.00	0.0	0.0	COMB
E	48282.8	9399.84	12269.21	421.82	21467.97	3296.90	0.0	757.4	
D	41985.0	12260.66	11979.41	587.33	21649.51	4570.04	0.0	757.4	
D	0.0				0.00	0.00	0.0	0.0	COMB
F	41985.0	8173.78	10668.88	366.80	18667.80	2866.87	0.0	757.4	

Additional Design Data

M	periphery-O/-I [m2/m] [m2/m]	deff [mm]	t-min [mm]	t-max [mm]	SMP [o/o]	thet-p [tm2/m]	thet-y [tm2/m]	thet-z [tm2/m]	thet-yz [tm2/m]
	5.980	48.2	45.0	52.0	0.0	0.387	0.356	0.031	

SOFiSTiK AG - www.sofistik.de

Composite bridge 38+50+38, b=14.25m, 2x2HL1100R HISTAR460 , slab 0.30m C30/37

Cross section No. 258.5 = CS 30 - in-situ conc:C3

Cross section No. 259 - VFT (251)

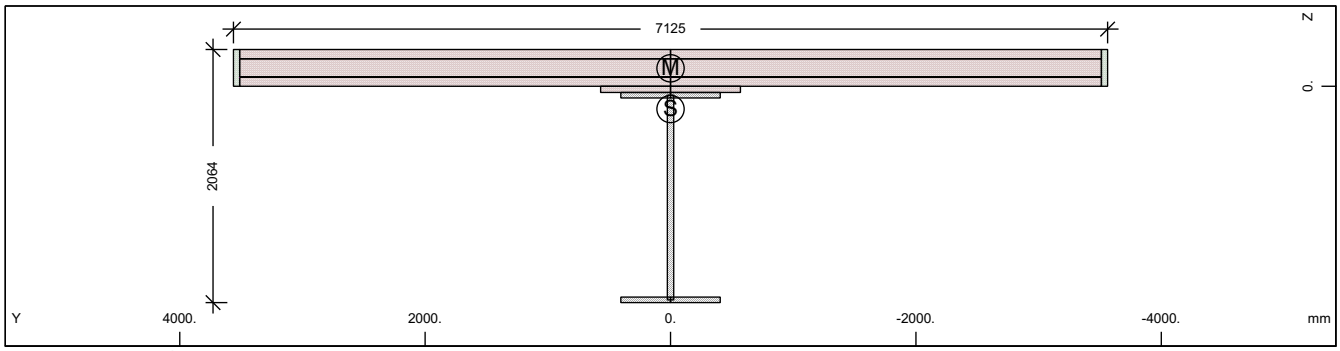

Cross section No. 259 - VFT (251)

Static properties of cross section

Mat NoR	A[cm2] It[cm4]	Ay/Az/Ayz [cm2]	Iy/Iz/Iyz [cm4]	ys/zs [mm]	y/z-sc [mm]	modules [N/mm2]	gam [kN/m]
1	5081.81	3079.79	19247483.	0.0	0.0	210000	67.40
	6270.0	762.95	140135802.	185.1	-146.9	80769	

Additional static properties of cross section

Alfa-T [1/°K]	ymin ymax [mm]	zmin zmax [mm]	hymin hzmin [mm]	AK AB [cm2]	MB	Tau-T Tau-B [1/m3]	Tau-Vy Tau-Vz [1/m2]
1.2E-05	-3562.5	-485.1		1.423E+04		4.795E+00	4.192E+00
	3562.5	1578.5		2.195E+04		1.255E+02	1.196E+01

Section values for warping

Wmin[cm2]	Wmax[cm2]	CM[cm6]	CMS[cm4]	ASwyy[cm6]	ASwzz[cm6]	ry[mm]	rz[mm]
-7646.61	7646.617	475473482.	3308763.7	2004.53	275.32	0.0	-710.9

Partial cross sections

Mat NoR	A[cm2] It[cm4]	Ay/Az/Ayz [cm2]	Iy/Iz/Iyz [cm4]	ys/zs [mm]	modules [N/mm2]	gam [kN/m]
1	1596.71	0.13	7088169.5	0.0	210000	12.53
	12741.7	530.75	398580.9	906.8	80769	
30	21643.46	17597.01	169965.3	0.0	32837	54.11
	6326787.2	1325.31	867146974.	-145.4	13682	
31	301.55	0.13	0.0	0.0	0	0.75
	90464.3	0.00	37733266.	-150.0	0	
300	105.87	103.75	5955.4	0.0	200000	0.00
	0.2	8.08	4353445.0	-150.0	76923	

Design values of cross section

Mat NoR	A[cm2] It[cm4]	Ay/Az/Ayz [cm2]	Iy/Iz/Iyz [cm4]	ys/zs [mm]	modules [N/mm2]	gam [kN/m]
1	4292.15	2384.25	18219912.	0.0	182609	67.40
	6270.0	710.57	108497883.	245.9	70234	

Design forces and moments
(C/E = characteristic plastic/elastic, D=plast.Design, F=elast. Design)

	N[kN]	Vy[kN]	Vz[kN]	Mt[kNm]	My[kNm]	Mz[kNm]	y[mm]	z[mm]	BUCK
C	58783.5	53365.30	45583.08	99321.78	58325.99	71494.22	53.2	-74.5	c d
C	-45984.3				65113.76	0.00	0.0	185.1	COMB
C	-32917.5				0.00	71974.55	0.0	0.0	COMB
C	-124619.	53365.30	45583.07	99321.75	-37694.6	-71494.2	-53.2	754.7	
C	-19850.7				-43349.8	0.00	0.0	185.1	COMB
C	-32917.5				0.00	-71974.6	0.0	0.0	COMB
E	170240.8	23974.84	16176.00	3521.10	40847.06	76550.40	0.0	185.1	
E	-97499.3	23974.84	16176.00	3521.10	-40847.1	-76550.4	0.0	185.1	
D	51116.1	39057.81	34330.11	66381.16	49280.23	50716.20	21.2	-5.9	

SOFiSTiK AG - www.sofistik.de

Composite bridge 38+50+38, b=14.25m, 2x2HL1100R HISTAR460 , slab 0.30m C30/37

Design forces and moments
(C/E = characteristic plastic/elastic, D=plast.Design, F=elast. Design)

	N[kN]	Vy[kN]	Vz[kN]	Mt[kNm]	My[kNm]	Mz[kNm]	y[mm]	z[mm]	BUCK
D	-26628.5				52204.78	0.00	0.0	185.1	COMB
D	-21945.0				0.00	50949.32	0.0	0.0	COMB
D	-95006.1	39057.81	34330.11	66381.15	-32777.9	-50716.2	-21.2	754.6	
D	-17261.5				-37695.4	0.00	0.0	185.1	COMB
D	-21945.0				0.00	-50949.3	0.0	0.0	COMB
F	148035.5	15983.22	11503.53	2347.40	35519.18	51033.60	0.0	185.1	
F	-64999.5	15983.22	11503.53	2347.40	-35519.2	-51033.6	0.0	185.1	

Additional Design Data

M	periphery-O/-I [m2/m]	[m2/m]	deff [mm]	t-min [mm]	t-max [mm]	SMP [o/o]	thet-p [tm2/m]	thet-y [tm2/m]	thet-z [tm2/m]	thet-yz [tm2/m]
	51.205		19.8	0.8	300.0	0.0	24.344	1.690	22.653	
1	6.577		48.6	45.0	52.0	0.0	0.588	0.556	0.031	
30	16.329		600.0	50.0	300.0	0.0	21.683	0.004	21.679	
31	0.201		300.0	300.0	300.0	0.0	0.943		0.943	
**	28.098		0.8	0.8	0.8	0.0	0.000	0.000	0.000	

Cross section No. 259.1 = CS 1 - steel alone

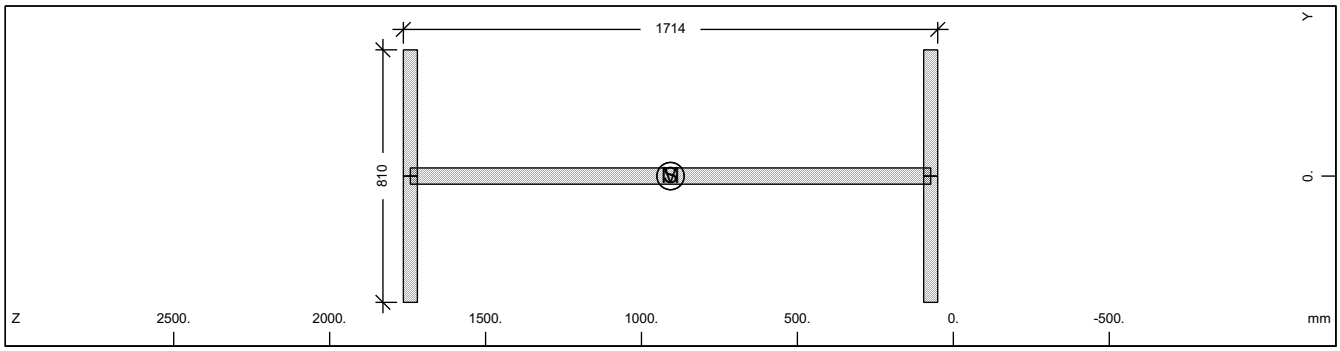

Cross section No. 259

Static properties of cross section

Mat NoR	A[cm2] It[cm4]	Ay/Az/Ayz [cm2]	Iy/Iz/Iyz [cm4]	ys/zs [mm]	modules [N/mm2]	gam [kN/m]
1	1596.71	607.50	7088169.5	0.0	210000	12.53
	6270.0	815.48	398580.9	906.8	80769	

Additional static properties of cross section

Alfa-T [1/°K]	ymin ymax [mm]	zmin zmax [mm]	hymin hzmin [mm]	AK AB [cm2]	MB	Tau-T Tau-B [1/m3]	Tau-Vy Tau-Vz [1/m2]
1.2E-05	-405.0	-856.8		9.424E+02		4.081E+02	2.058E+01
	405.0	856.8				1.255E+02	1.316E+01

Section values for warping

Wmin[cm2]	Wmax[cm2]	CM[cm6]	CMS[cm4]	ASwyy[cm6]	ASwzz[cm6]	ry[mm]	rz[mm]
-3379.07	3379.072774606703.		4228938.0	-0.65	-11.63	0.0	0.0

Design values of cross section

Mat NoR	A[cm2] It[cm4]	Ay/Az/Ayz [cm2]	Iy/Iz/Iyz [cm4]	ys/zs [mm]	modules [N/mm2]	gam [kN/m]
1	1596.71	607.50	7088169.5	0.0	182609	12.53
	6270.0	815.48	398580.9	906.8	70234	

Design forces and moments
(C/E = characteristic plastic/elastic, D=plast.Design, F=elast. Design)

	N[kN]	Vy[kN]	Vz[kN]	Mt[kNm]	My[kNm]	Mz[kNm]	y[mm]	z[mm]	BUCK
C	53489.9	14099.76	16782.63	753.59	32502.25	5323.24	0.0	906.8	c d
C	0.0				0.00	0.00	0.0	0.0	COMB
E	53489.9	9399.84	14695.46	473.92	27712.76	3296.90	0.0	906.8	
D	46512.9	12260.66	14593.59	655.30	28262.82	4628.91	0.0	906.8	

SOFiSTiK AG - www.sofistik.de

Composite bridge 38+50+38, b=14.25m, 2x2HL1100R HISTAR460 , slab 0.30m C30/37

Design forces and moments
(C/E = characteristic plastic/elastic, D=plast.Design, F=elast. Design)

	N[kN]	Vy[kN]	Vz[kN]	Mt[kNm]	My[kNm]	Mz[kNm]	y[mm]	z[mm]	BUCK
D	0.0				0.00	0.00	0.0	0.0	COMB
F	46512.9	8173.78	12778.66	412.11	24098.05	2866.87	0.0	906.8	

Additional Design Data

M	periphery-O/-I [m2/m]	[m2/m]	deff [mm]	t-min [mm]	t-max [mm]	SMP [o/o]	thet-p [tm2/m]	thet-y [tm2/m]	thet-z [tm2/m]	thet-yz [tm2/m]
	6.577		48.6	45.0	52.0	0.0	0.588	0.556	0.031	

Cross section No. 259.2 = CS 10 - prefab. slab C1

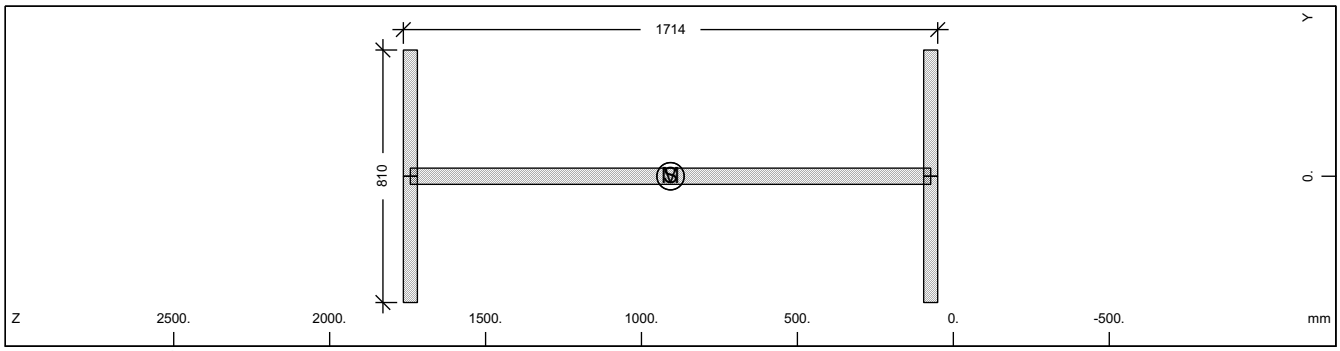

Cross section No. 259

Static properties of cross section

Mat NoR	A[cm2] It[cm4]	Ay/Az/Ayz [cm2]	Iy/Iz/Iyz [cm4]	ys/zs [mm]	modules [N/mm2]	gam [kN/m]
1	1596.71	607.50	7088169.5	0.0	210000	12.53
	6270.0	815.48	398580.9	906.8	80769	

Additional static properties of cross section

Alfa-T [1/°K]	ymin ymax [mm]	zmin zmax [mm]	hymin hzmin [mm]	AK AB [cm2]	MB	Tau-T Tau-B [1/m3]	Tau-Vy Tau-Vz [1/m2]
1.2E-05	-405.0	-856.8		9.424E+02		4.081E+02	2.058E+01
	405.0	856.8				1.255E+02	1.316E+01

Section values for warping

Wmin[cm2]	Wmax[cm2]	CM[cm6]	CMS[cm4]	ASwyy[cm6]	ASwzz[cm6]	ry[mm]	rz[mm]
-3379.07	3379.072774606703.		4228938.0	-0.65	-11.63	0.0	0.0

Design values of cross section

Mat NoR	A[cm2] It[cm4]	Ay/Az/Ayz [cm2]	Iy/Iz/Iyz [cm4]	ys/zs [mm]	modules [N/mm2]	gam [kN/m]
1	1596.71	607.50	7088169.5	0.0	182609	12.53
	6270.0	815.48	398580.9	906.8	70234	

Design forces and moments
(C/E = characteristic plastic/elastic, D=plast.Design, F=elast. Design)

	N[kN]	Vy[kN]	Vz[kN]	Mt[kNm]	My[kNm]	Mz[kNm]	y[mm]	z[mm]	BUCK
C	53489.9	14099.76	16782.63	753.59	32502.25	5323.24	0.0	906.8	c d
C	0.0				0.00	0.00	0.0	0.0	COMB
E	53489.9	9399.84	14695.46	473.92	27712.76	3296.90	0.0	906.8	
D	46512.9	12260.66	14593.59	655.30	28262.82	4628.91	0.0	906.8	
D	0.0				0.00	0.00	0.0	0.0	COMB
F	46512.9	8173.78	12778.66	412.11	24098.05	2866.87	0.0	906.8	

Additional Design Data

M	periphery-O/-I [m2/m]	[m2/m]	deff [mm]	t-min [mm]	t-max [mm]	SMP [o/o]	thet-p [tm2/m]	thet-y [tm2/m]	thet-z [tm2/m]	thet-yz [tm2/m]
	6.577		48.6	45.0	52.0	0.0	0.588	0.556	0.031	

SOFiSTiK AG - www.sofistik.de

Composite bridge 38+50+38, b=14.25m, 2x2HL1100R HISTAR460 , slab 0.30m C30/37

Cross section No. 259.3 = CS 20 - in-situ conc:C2

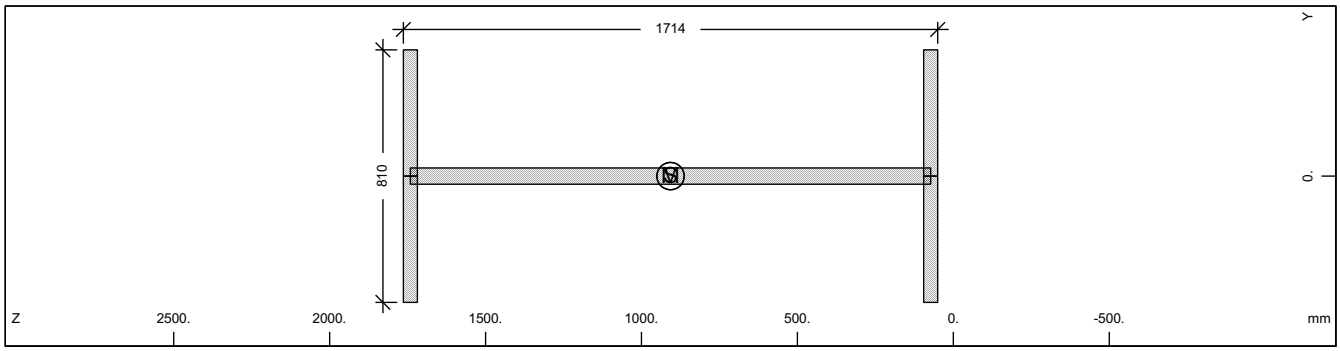

Cross section No. 259

Static properties of cross section

Mat NoR	A[cm2] It[cm4]	Ay/Az/Ayz [cm2]	Iy/Iz/Iyz [cm4]	ys/zs [mm]	modules [N/mm2]	gam [kN/m]
1	1596.71	607.50	7088169.5	0.0	210000	12.53
	6270.0	815.48	398580.9	906.8	80769	

Additional static properties of cross section

Alfa-T [1/°K]	ymin ymax [mm]	zmin zmax [mm]	hymin hzmin [mm]	AK AB [cm2]	MB	Tau-T Tau-B [1/m3]	Tau-Vy Tau-Vz [1/m2]
1.2E-05	-405.0	-856.8		9.424E+02		4.081E+02	2.058E+01
	405.0	856.8				1.255E+02	1.316E+01

Section values for warping

Wmin[cm2]	Wmax[cm2]	CM[cm6]	CMS[cm4]	ASwyy[cm6]	ASwzz[cm6]	ry[mm]	rz[mm]
-3379.07	3379.072774606703.		4228938.0	-0.65	-11.63	0.0	0.0

Design values of cross section

Mat NoR	A[cm2] It[cm4]	Ay/Az/Ayz [cm2]	Iy/Iz/Iyz [cm4]	ys/zs [mm]	modules [N/mm2]	gam [kN/m]
1	1596.71	607.50	7088169.5	0.0	182609	12.53
	6270.0	815.48	398580.9	906.8	70234	

Design forces and moments
(C/E = characteristic plastic/elastic, D=plast.Design, F=elast. Design)

	N[kN]	Vy[kN]	Vz[kN]	Mt[kNm]	My[kNm]	Mz[kNm]	y[mm]	z[mm]	BUCK
C	53489.9	14099.76	16782.63	753.59	32502.25	5323.24	0.0	906.8	c d
C	0.0				0.00	0.00	0.0	0.0	COMB
E	53489.9	9399.84	14695.46	473.92	27712.76	3296.90	0.0	906.8	
D	46512.9	12260.66	14593.59	655.30	28262.82	4628.91	0.0	906.8	
D	0.0				0.00	0.00	0.0	0.0	COMB
F	46512.9	8173.78	12778.66	412.11	24098.05	2866.87	0.0	906.8	

Additional Design Data

M	periphery-O/-I [m2/m] [m2/m]	deff [mm]	t-min [mm]	t-max [mm]	SMP [o/o]	thet-p [tm2/m]	thet-y [tm2/m]	thet-z [tm2/m]	thet-yz [tm2/m]
	6.577	48.6	45.0	52.0	0.0	0.588	0.556	0.031	

SOFiSTiK AG - www.sofistik.de

Composite bridge 38+50+38, b=14.25m, 2x2HL1100R HISTAR460 , slab 0.30m C30/37

Cross section No. 259.4 = CS 21 - reinf active:C2

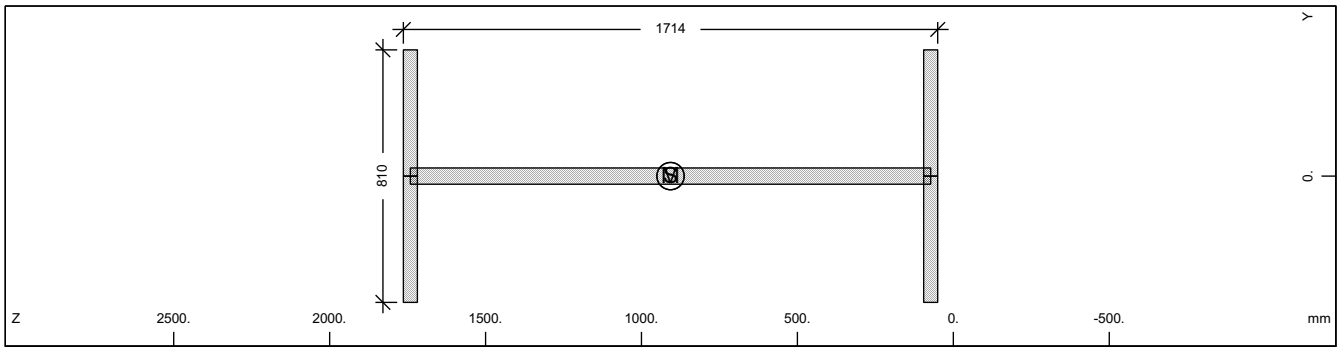

Cross section No. 259

Static properties of cross section

Mat NoR	A[cm2] It[cm4]	Ay/Az/Ayz [cm2]	Iy/Iz/Iyz [cm4]	ys/zs [mm]	modules [N/mm2]	gam [kN/m]
1	1596.71	607.50	7088169.5	0.0	210000	12.53
	6270.0	815.48	398580.9	906.8	80769	

Additional static properties of cross section

Alfa-T [1/°K]	ymin ymax [mm]	zmin zmax [mm]	hymin hzmin [mm]	AK AB [cm2]	MB	Tau-T Tau-B [1/m3]	Tau-Vy Tau-Vz [1/m2]
1.2E-05	-405.0	-856.8		9.424E+02		4.081E+02	2.058E+01
	405.0	856.8				1.255E+02	1.316E+01

Section values for warping

Wmin[cm2]	Wmax[cm2]	CM[cm6]	CMS[cm4]	ASwyy[cm6]	ASwzz[cm6]	ry[mm]	rz[mm]
-3379.07	3379.072774606703.		4228938.0	-0.65	-11.63	0.0	0.0

Design values of cross section

Mat NoR	A[cm2] It[cm4]	Ay/Az/Ayz [cm2]	Iy/Iz/Iyz [cm4]	ys/zs [mm]	modules [N/mm2]	gam [kN/m]
1	1596.71	607.50	7088169.5	0.0	182609	12.53
	6270.0	815.48	398580.9	906.8	70234	

Design forces and moments
(C/E = characteristic plastic/elastic, D=plast.Design, F=elast. Design)

	N[kN]	Vy[kN]	Vz[kN]	Mt[kNm]	My[kNm]	Mz[kNm]	y[mm]	z[mm]	BUCK
C	53489.9	14099.76	16782.63	753.59	32502.25	5323.24	0.0	906.8	c d
C	0.0				0.00	0.00	0.0	0.0	COMB
E	53489.9	9399.84	14695.46	473.92	27712.76	3296.90	0.0	906.8	
D	46512.9	12260.66	14593.59	655.30	28262.82	4628.91	0.0	906.8	
D	0.0				0.00	0.00	0.0	0.0	COMB
F	46512.9	8173.78	12778.66	412.11	24098.05	2866.87	0.0	906.8	

Additional Design Data

M	periphery-O/-I [m2/m] [m2/m]	deff [mm]	t-min [mm]	t-max [mm]	SMP [o/o]	thet-p [tm2/m]	thet-y [tm2/m]	thet-z [tm2/m]	thet-yz [tm2/m]
	6.577	48.6	45.0	52.0	0.0	0.588	0.556	0.031	

SOFiSTiK AG - www.sofistik.de

Composite bridge 38+50+38, b=14.25m, 2x2HL1100R HISTAR460 , slab 0.30m C30/37

Cross section No. 259.5 = CS 30 - in-situ conc:C3

Cross section No. 260 - VFT (251)

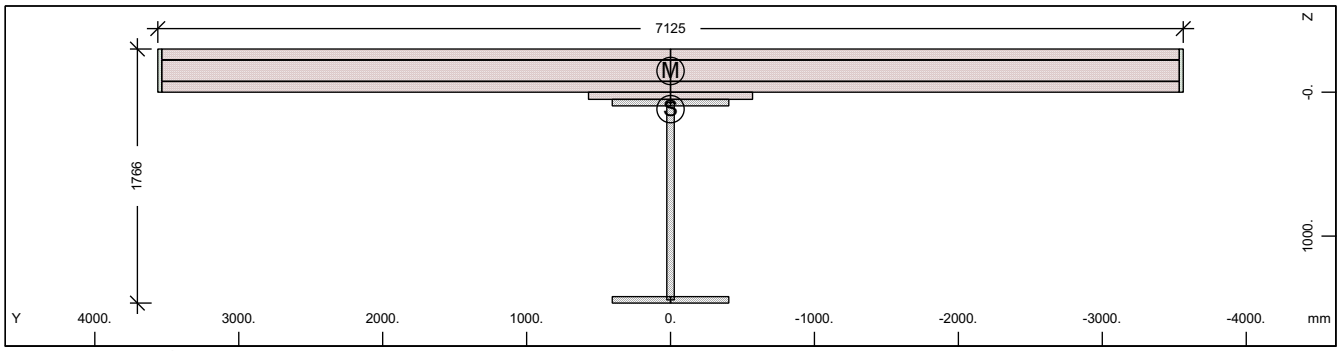

Cross section No. 260 - VFT (251)

Static properties of cross section

Mat NoR	A[cm2] It[cm4]	Ay/Az/Ayz [cm2]	Iy/Iz/Iyz [cm4]	ys/zs [mm]	y/z-sc [mm]	modules [N/mm2]	gam [kN/m]
1	4948.83	3099.21	12914004.	0.0	0.0	210000	66.18
	6270.0	616.92	142852105.	117.7	-147.3	80769	

Additional static properties of cross section

Alfa-T [1/°K]	ymin ymax [mm]	zmin zmax [mm]	hymin hzmin [mm]	AK AB [cm2]	MB	Tau-T Tau-B [1/m3]	Tau-Vy Tau-Vz [1/m2]
1.2E-05	-3562.5	-417.7		1.430E+04		4.771E+00	4.165E+00
	3562.5	1348.2		2.195E+04		1.255E+02	1.400E+01

Section values for warping

Wmin[cm2]	Wmax[cm2]	CM[cm6]	CMS[cm4]	ASwyy[cm6]	ASwzz[cm6]	ry[mm]	rz[mm]
-6442.36	6442.36	5415492247.	1861782.4	-2655.90	-240.10	0.0	-1484.3

Partial cross sections

Mat NoR	A[cm2] It[cm4]	Ay/Az/Ayz [cm2]	Iy/Iz/Iyz [cm4]	ys/zs [mm]	modules [N/mm2]	gam [kN/m]
1	1441.85	0.12	4541274.9	0.0	210000	11.32
	11345.9	397.42	398580.9	757.9	80769	
30	21779.22	17708.05	169993.9	0.0	32837	54.45
	6367516.6	1251.67	884002786.	-145.4	13682	
31	165.78	0.02	0.0	0.0	0	0.41
	49735.0	0.00	20877484.	-150.0	0	
300	106.56	104.41	5993.7	0.0	200000	0.00
	0.2	7.84	4438128.3	-150.0	76923	

Design values of cross section

Mat NoR	A[cm2] It[cm4]	Ay/Az/Ayz [cm2]	Iy/Iz/Iyz [cm4]	ys/zs [mm]	modules [N/mm2]	gam [kN/m]
1	4154.21	2399.30	12252554.	0.0	182609	66.18
	6270.0	567.44	110599197.	168.0	70234	

Design forces and moments
(C/E = characteristic plastic/elastic, D=plast.Design, F=elast. Design)

	N[kN]	Vy[kN]	Vz[kN]	Mt[kNm]	My[kNm]	Mz[kNm]	y[mm]	z[mm]	BUCK
C	53629.6	53384.99	42587.76	99243.91	46042.18	71152.08	125.0	-75.3	c d
C	-48856.4				50813.57	0.00	0.0	117.7	COMB
C	-32917.5				0.00	72027.27	0.0	0.0	COMB
C	-119465.	53384.99	42587.76	99243.88	-29353.2	-71152.1	-125.	604.8	
C	-16978.6				-33490.3	0.00	0.0	117.7	COMB
C	-32917.5				0.00	-72027.3	0.0	0.0	COMB
E	165785.7	24127.66	13815.15	3538.97	32089.14	77534.70	0.0	117.7	
E	-94947.8	24127.66	13815.15	3538.97	-32089.1	-77534.7	0.0	117.7	
D	46634.4	39074.93	31725.49	66313.45	38840.02	50714.99	25.5	-37.8	

SOFiSTiK AG - www.sofistik.de

Composite bridge 38+50+38, b=14.25m, 2x2HL1100R HISTAR460 , slab 0.30m C30/37

Design forces and moments
(C/E = characteristic plastic/elastic, D=plast.Design, F=elast. Design)

	N[kN]	Vy[kN]	Vz[kN]	Mt[kNm]	My[kNm]	Mz[kNm]	y[mm]	z[mm]	BUCK
D	-29126.0				40670.84	0.00	0.0	117.7	COMB
D	-21945.0				0.00	50995.16	0.0	0.0	COMB
D	-90524.4	39074.93	31725.48	66313.43	-25524.5	-50715.0	-25.5	604.4	
D	-14764.0				-29122.0	0.00	0.0	117.7	COMB
D	-21945.0				0.00	-50995.2	0.0	0.0	COMB
F	144161.4	16085.11	9601.29	2359.31	27903.60	51689.80	0.0	117.7	
F	-63298.5	16085.11	9601.29	2359.31	-27903.6	-51689.8	0.0	117.7	

Additional Design Data

M	periphery-O/-I [m2/m]	[m2/m]	deff [mm]	t-min [mm]	t-max [mm]	SMP [o/o]	thet-p [tm2/m]	thet-y [tm2/m]	thet-z [tm2/m]	thet-yz [tm2/m]
	50.791		19.5	0.8	300.0	0.0	23.780	1.126	22.653	
1	5.982		48.2	45.0	52.0	0.0	0.388	0.356	0.031	
30	16.419		600.0	50.0	300.0	0.0	22.104	0.004	22.100	
31	0.111		300.0	300.0	300.0	0.0	0.522		0.522	
**	28.279		0.8	0.8	0.8	0.0	0.000	0.000	0.000	

Cross section No. 260.1 = CS 1 - steel alone

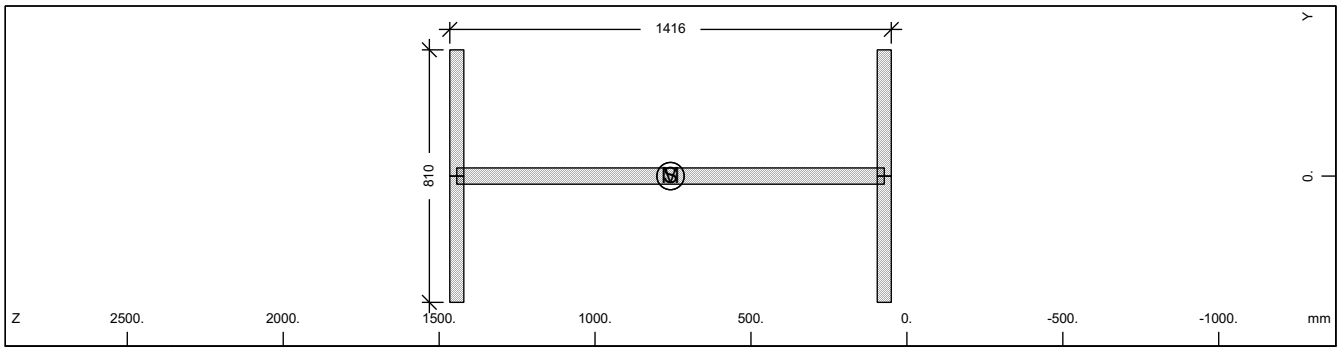

Cross section No. 260

Static properties of cross section

Mat NoR	A[cm2] It[cm4]	Ay/Az/Ayz [cm2]	Iy/Iz/Iyz [cm4]	ys/zs [mm]	modules [N/mm2]	gam [kN/m]
1	1441.85	607.50	4541274.9	0.0	210000	11.32
	6270.0	662.00	398580.9	757.9	80769	

Additional static properties of cross section

Alfa-T [1/°K]	ymin ymax [mm]	zmin zmax [mm]	hymin hzmin [mm]	AK AB [cm2]	MB	Tau-T Tau-B [1/m3]	Tau-Vy Tau-Vz [1/m2]
1.2E-05	-405.0	-707.9		8.392E+02		4.583E+02	2.058E+01
	405.0	707.9				1.255E+02	1.575E+01

Section values for warping

Wmin[cm2]	Wmax[cm2]	CM[cm6]	CMS[cm4]	ASwyy[cm6]	ASwzz[cm6]	ry[mm]	rz[mm]
-2775.99	2775.991872581088.	2854108.8		-3.09	-35.25	0.0	0.0

Design values of cross section

Mat NoR	A[cm2] It[cm4]	Ay/Az/Ayz [cm2]	Iy/Iz/Iyz [cm4]	ys/zs [mm]	modules [N/mm2]	gam [kN/m]
1	1441.85	607.50	4541274.9	0.0	182609	11.32
	6270.0	662.00	398580.9	757.9	70234	

Design forces and moments
(C/E = characteristic plastic/elastic, D=plast.Design, F=elast. Design)

	N[kN]	Vy[kN]	Vz[kN]	Mt[kNm]	My[kNm]	Mz[kNm]	y[mm]	z[mm]	BUCK
C	48301.8	14099.76	13787.31	675.71	24923.32	5255.80	0.0	757.9	c d
C	0.0				0.00	0.00	0.0	0.0	COMB
E	48301.8	9399.84	12278.19	422.01	21489.84	3296.90	0.0	757.9	
D	42001.6	12260.66	11988.97	587.58	21672.45	4570.26	0.0	757.9	

SOFiSTiK AG - www.sofistik.de

Composite bridge 38+50+38, b=14.25m, 2x2HL1100R HISTAR460 , slab 0.30m C30/37

Design forces and moments
(C/E = characteristic plastic/elastic, D=plast.Design, F=elast. Design)

	N[kN]	Vy[kN]	Vz[kN]	Mt[kNm]	My[kNm]	Mz[kNm]	y[mm]	z[mm]	BUCK
D	0.0				0.00	0.00	0.0	0.0	COMB
F	42001.6	8173.78	10676.68	366.96	18686.82	2866.87	0.0	757.9	

Additional Design Data

M	periphery-O/-I [m2/m]	[m2/m]	deff [mm]	t-min [mm]	t-max [mm]	SMP [o/o]	thet-p [tm2/m]	thet-y [tm2/m]	thet-z [tm2/m]	thet-yz [tm2/m]
	5.982		48.2	45.0	52.0	0.0	0.388	0.356	0.031	

Cross section No. 260.2 = CS 10 - prefab. slab C1

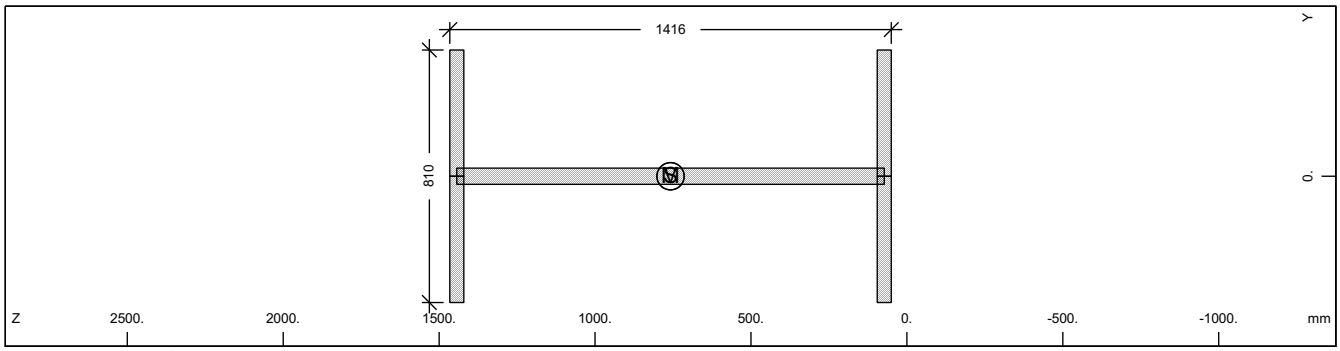

Cross section No. 260

Static properties of cross section

Mat NoR	A[cm2] It[cm4]	Ay/Az/Ayz [cm2]	Iy/Iz/Iyz [cm4]	ys/zs [mm]	modules [N/mm2]	gam [kN/m]
1	1441.85	607.50	4541274.9	0.0	210000	11.32
	6270.0	662.00	398580.9	757.9	80769	

Additional static properties of cross section

Alfa-T [1/°K]	ymin ymax [mm]	zmin zmax [mm]	hymin hzmin [mm]	AK AB [cm2]	MB	Tau-T Tau-B [1/m3]	Tau-Vy Tau-Vz [1/m2]
1.2E-05	-405.0	-707.9		8.392E+02		4.583E+02	2.058E+01
	405.0	707.9				1.255E+02	1.575E+01

Section values for warping

Wmin[cm2]	Wmax[cm2]	CM[cm6]	CMS[cm4]	ASwyy[cm6]	ASwzz[cm6]	ry[mm]	rz[mm]
-2775.99	2775.991872581088.		2854108.8	-3.09	-35.25	0.0	0.0

Design values of cross section

Mat NoR	A[cm2] It[cm4]	Ay/Az/Ayz [cm2]	Iy/Iz/Iyz [cm4]	ys/zs [mm]	modules [N/mm2]	gam [kN/m]
1	1441.85	607.50	4541274.9	0.0	182609	11.32
	6270.0	662.00	398580.9	757.9	70234	

Design forces and moments
(C/E = characteristic plastic/elastic, D=plast.Design, F=elast. Design)

	N[kN]	Vy[kN]	Vz[kN]	Mt[kNm]	My[kNm]	Mz[kNm]	y[mm]	z[mm]	BUCK
C	48301.8	14099.76	13787.31	675.71	24923.32	5255.80	0.0	757.9	c d
C	0.0				0.00	0.00	0.0	0.0	COMB
E	48301.8	9399.84	12278.19	422.01	21489.84	3296.90	0.0	757.9	
D	42001.6	12260.66	11988.97	587.58	21672.45	4570.26	0.0	757.9	
D	0.0				0.00	0.00	0.0	0.0	COMB
F	42001.6	8173.78	10676.68	366.96	18686.82	2866.87	0.0	757.9	

Additional Design Data

M	periphery-O/-I [m2/m]	[m2/m]	deff [mm]	t-min [mm]	t-max [mm]	SMP [o/o]	thet-p [tm2/m]	thet-y [tm2/m]	thet-z [tm2/m]	thet-yz [tm2/m]
	5.982		48.2	45.0	52.0	0.0	0.388	0.356	0.031	

SOFiSTiK AG - www.sofistik.de

Composite bridge 38+50+38, b=14.25m, 2x2HL1100R HISTAR460 , slab 0.30m C30/37

Cross section No. 260.3 = CS 20 - in-situ conc:C2

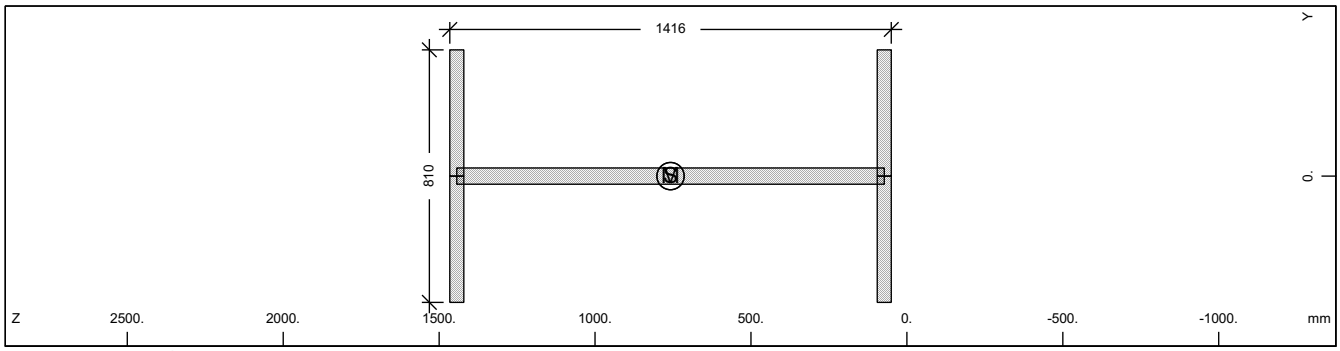

Cross section No. 260

Static properties of cross section

Mat NoR	A[cm2] It[cm4]	Ay/Az/Ayz [cm2]	Iy/Iz/Iyz [cm4]	ys/zs [mm]	modules [N/mm2]	gam [kN/m]
1	1441.85	607.50	4541274.9	0.0	210000	11.32
	6270.0	662.00	398580.9	757.9	80769	

Additional static properties of cross section

Alfa-T [1/°K]	ymin ymax [mm]	zmin zmax [mm]	hymin hzmin [mm]	AK AB [cm2]	MB	Tau-T Tau-B [1/m3]	Tau-Vy Tau-Vz [1/m2]
1.2E-05	-405.0	-707.9		8.392E+02		4.583E+02	2.058E+01
	405.0	707.9				1.255E+02	1.575E+01

Section values for warping

Wmin[cm2]	Wmax[cm2]	CM[cm6]	CMS[cm4]	ASwyy[cm6]	ASwzz[cm6]	ry[mm]	rz[mm]
-2775.99	2775.991872581088.		2854108.8	-3.09	-35.25	0.0	0.0

Design values of cross section

Mat NoR	A[cm2] It[cm4]	Ay/Az/Ayz [cm2]	Iy/Iz/Iyz [cm4]	ys/zs [mm]	modules [N/mm2]	gam [kN/m]
1	1441.85	607.50	4541274.9	0.0	182609	11.32
	6270.0	662.00	398580.9	757.9	70234	

Design forces and moments
(C/E = characteristic plastic/elastic, D=plast.Design, F=elast. Design)

	N[kN]	Vy[kN]	Vz[kN]	Mt[kNm]	My[kNm]	Mz[kNm]	y[mm]	z[mm]	BUCK
C	48301.8	14099.76	13787.31	675.71	24923.32	5255.80	0.0	757.9	c d
C	0.0				0.00	0.00	0.0	0.0	COMB
E	48301.8	9399.84	12278.19	422.01	21489.84	3296.90	0.0	757.9	
D	42001.6	12260.66	11988.97	587.58	21672.45	4570.26	0.0	757.9	
D	0.0				0.00	0.00	0.0	0.0	COMB
F	42001.6	8173.78	10676.68	366.96	18686.82	2866.87	0.0	757.9	

Additional Design Data

M	periphery-O/-I [m2/m]	[m2/m]	deff [mm]	t-min [mm]	t-max [mm]	SMP [o/o]	thet-p [tm2/m]	thet-y [tm2/m]	thet-z [tm2/m]	thet-yz [tm2/m]
	5.982		48.2	45.0	52.0	0.0	0.388	0.356	0.031	

SOFiSTiK AG - www.sofistik.de

Composite bridge 38+50+38, b=14.25m, 2x2HL1100R HISTAR460 , slab 0.30m C30/37

Cross section No. 260.4 = CS 21 - reinf active:C2

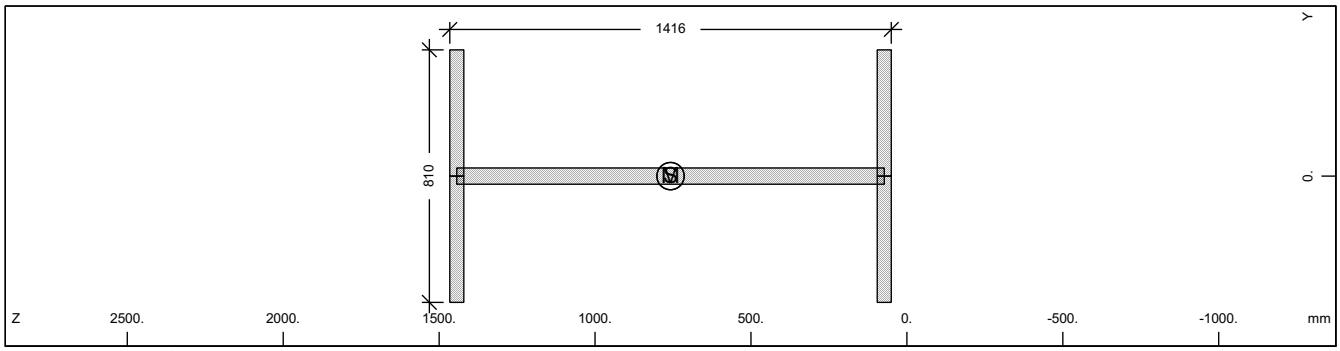

Cross section No. 260

Static properties of cross section

Mat NoR	A[cm2] It[cm4]	Ay/Az/Ayz [cm2]	Iy/Iz/Iyz [cm4]	ys/zs [mm]	modules [N/mm2]	gam [kN/m]
1	1441.85	607.50	4541274.9	0.0	210000	11.32
	6270.0	662.00	398580.9	757.9	80769	

Additional static properties of cross section

Alfa-T [1/°K]	ymin ymax [mm]	zmin zmax [mm]	hymin hzmin [mm]	AK AB [cm2]	MB	Tau-T Tau-B [1/m3]	Tau-Vy Tau-Vz [1/m2]
1.2E-05	-405.0	-707.9		8.392E+02		4.583E+02	2.058E+01
	405.0	707.9				1.255E+02	1.575E+01

Section values for warping

Wmin[cm2]	Wmax[cm2]	CM[cm6]	CMS[cm4]	ASwyy[cm6]	ASwzz[cm6]	ry[mm]	rz[mm]
-2775.99	2775.991872581088.		2854108.8	-3.09	-35.25	0.0	0.0

Design values of cross section

Mat NoR	A[cm2] It[cm4]	Ay/Az/Ayz [cm2]	Iy/Iz/Iyz [cm4]	ys/zs [mm]	modules [N/mm2]	gam [kN/m]
1	1441.85	607.50	4541274.9	0.0	182609	11.32
	6270.0	662.00	398580.9	757.9	70234	

Design forces and moments
(C/E = characteristic plastic/elastic, D=plast.Design, F=elast. Design)

	N[kN]	Vy[kN]	Vz[kN]	Mt[kNm]	My[kNm]	Mz[kNm]	y[mm]	z[mm]	BUCK
C	48301.8	14099.76	13787.31	675.71	24923.32	5255.80	0.0	757.9	c d
C	0.0				0.00	0.00	0.0	0.0	COMB
E	48301.8	9399.84	12278.19	422.01	21489.84	3296.90	0.0	757.9	
D	42001.6	12260.66	11988.97	587.58	21672.45	4570.26	0.0	757.9	
D	0.0				0.00	0.00	0.0	0.0	COMB
F	42001.6	8173.78	10676.68	366.96	18686.82	2866.87	0.0	757.9	

Additional Design Data

M	periphery-O/-I [m2/m]	[m2/m]	deff [mm]	t-min [mm]	t-max [mm]	SMP [o/o]	thet-p [tm2/m]	thet-y [tm2/m]	thet-z [tm2/m]	thet-yz [tm2/m]
	5.982		48.2	45.0	52.0	0.0	0.388	0.356	0.031	

SOFiSTiK AG - www.sofistik.de

Composite bridge 38+50+38, b=14.25m, 2x2HL1100R HISTAR460 , slab 0.30m C30/37

Cross section No. 260.5 = CS 30 - in-situ conc:C3

Cross section No. 261 - VFT (253)

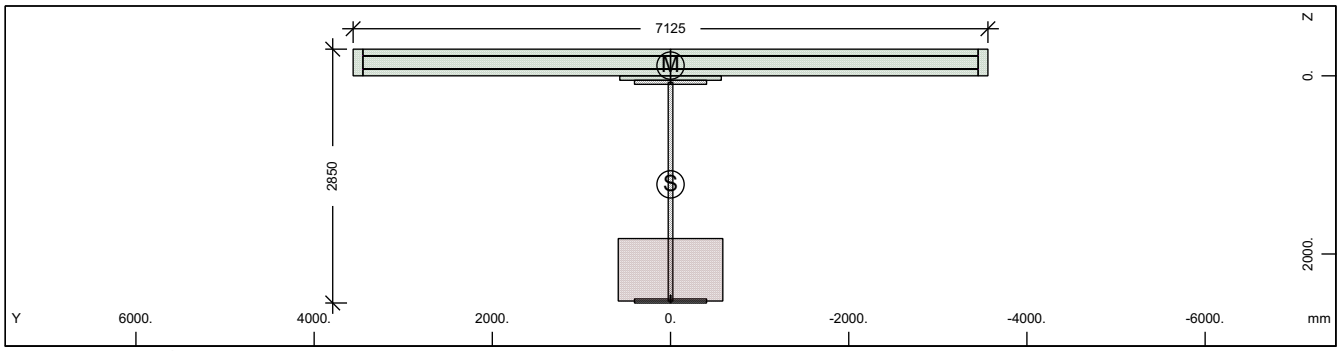

Cross section No. 261 - VFT (253)

Static properties of cross section

Mat NoR	A[cm2] It[cm4]	Ay/Az/Ayz [cm2]	Iy/Iz/Iyz [cm4]	ys/zs [mm]	y/z-sc [mm]	modules [N/mm2]	gam [kN/m]
1	2837.22	360.96	29308114.	0.0	0.0	210000	91.18
	6270.0	859.21	16807513.	1218.4	-115.6	80769	

Additional static properties of cross section

Alfa-T [1/°K]	ymin ymax [mm]	zmin zmax [mm]	hymin hzmin [mm]	AK AB [cm2]	MB	Tau-T Tau-B [1/m3]	Tau-Vy Tau-Vz [1/m2]
1.2E-05	-3562.5	-1518.4		5.530E+03		3.081E+00	3.377E+01
	3562.5	1331.6		3.017E+04		1.255E+02	1.619E+01

Section values for warping

Wmin[cm2]	Wmax[cm2]	CM[cm6]	CMS[cm4]	ASwyy[cm6]	ASwzz[cm6]	ry[mm]	rz[mm]
-10704.61	10704.61	1.511E+10	3656580.3	235.99	411.51	0.0	1827.2

Partial cross sections

Mat NoR	A[cm2] It[cm4]	Ay/Az/Ayz [cm2]	Iy/Iz/Iyz [cm4]	ys/zs [mm]	modules [N/mm2]	gam [kN/m]
1	2005.60	0.12	17396003.	0.0	210000	15.74
	16427.2	587.52	398580.9	1300.0	80769	
25	8229.74		3370085.0	0.0	10667	20.57
	37809512.	75.34	0.0	2177.0	4444	
210	0.64	0.00	0.0	0.0	200000	0.00
	2.2	0.00	0.0	2477.5	76923	
31	21945.00	18040.52	170028.4	0.0	0	54.86
	6417251.4	12406.34	904880243.	-145.5	0	
300	433.63	378.88	24391.9	0.0	200000	0.00
	14.3	280.39	17229374.	-150.0	76923	

Design values of cross section

Mat NoR	A[cm2] It[cm4]	Ay/Az/Ayz [cm2]	Iy/Iz/Iyz [cm4]	ys/zs [mm]	modules [N/mm2]	gam [kN/m]
1	2739.68	360.96	28339985.	0.0	182609	91.18
	6270.0	857.73	16807512.	1184.3	70234	

Design forces and moments
(C/E = characteristic plastic/elastic, D=plast.Design, F=elast. Design)

	N[kN]	Vy[kN]	Vz[kN]	Mt[kNm]	My[kNm]	Mz[kNm]	y[mm]	z[mm]	BUCK
C	88901.5	62845.51	67532.41	107524.5	99505.38	103961.3	26.0	-73.8	c c
C	-84641.8				175840.5	0.00	0.0	1218.	COMB
C	-45262.1				0.00	103907.8	0.0	0.0	COMB
C	-166226.	62845.51	67532.41	107524.5	-109221.	-103321.	-26.0	1387.	
C	-5882.5				-109718.	0.00	0.0	1218.	COMB
C	-45262.1				0.00	-103908.	0.0	0.0	COMB
E	95046.7	8548.00	17826.45	5355.94	73732.73	25558.13	0.0	1218.	

SOFiSTiK AG - www.sofistik.de

Composite bridge 38+50+38, b=14.25m, 2x2HL1100R HISTAR460 , slab 0.30m C30/37

Design forces and moments
(C/E = characteristic plastic/elastic, D=plast.Design, F=elast. Design)

	N[kN]	Vy[kN]	Vz[kN]	Mt[kNm]	My[kNm]	Mz[kNm]	y[mm]	z[mm]	BUCK
E	-95046.7	8548.00	17826.45	5355.94	-73732.7	-25558.1	0.0	1218.	
D	77305.6	47301.47	50661.32	71896.67	85226.16	78009.66	20.0	-22.1	
D	-60243.7				134686.6	0.00	0.0	1218.	COMB
D	-30174.7				0.00	77982.20	0.0	0.0	COMB
D	-128855.	47301.47	50661.32	71896.66	-90604.7	-77680.9	-20.0	1222.	
D	-105.8				-90604.8	0.00	0.0	1218.	COMB
D	-30174.7				0.00	-77982.2	0.0	0.0	COMB
F	82649.3	7433.05	15501.26	3570.63	64115.41	22224.46	0.0	1218.	
F	-82649.3	7433.05	15501.26	3570.63	-64115.4	-22224.5	0.0	1218.	

Additional Design Data

M	periphery-O/-I [m2/m]	[m2/m]	deff [mm]	t-min [mm]	t-max [mm]	SMP [o/o]	thet-p [tm2/m]	thet-y [tm2/m]	thet-z [tm2/m]	thet-yz [tm2/m]
	53.706		10.6	3.1	701.0	0.0	33.037	10.384	22.653	
1	8.150		49.2	45.0	52.0	0.0	1.397	1.366	0.031	
25	1.402		1174.0			0.0	0.084	0.084		
**	0.004		32.0			0.0	0.000		0.000	
31	16.530		265.5	50.0	300.0	0.0	22.626	0.004	22.622	
**	27.620		3.1	3.1	3.1	0.0	0.000	0.000	0.000	

Cross section No. 261.1 = CS 1 - steel alone

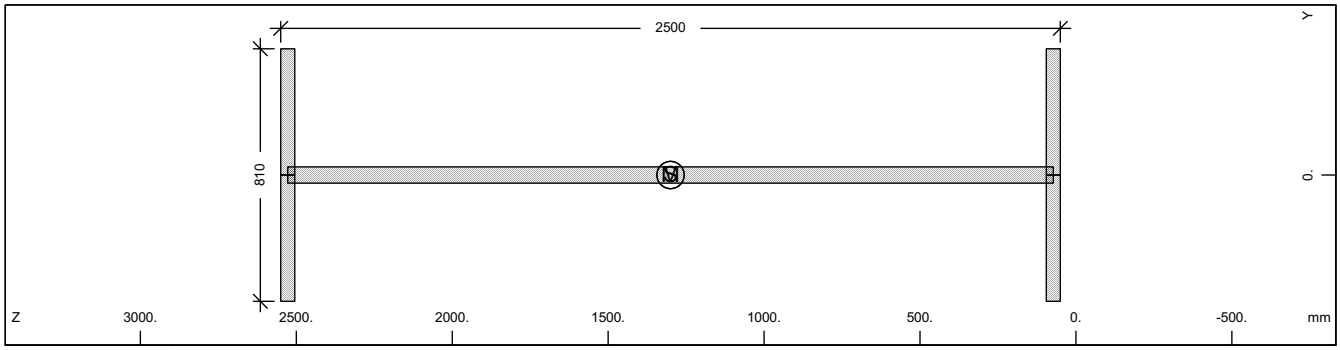

Cross section No. 261

Static properties of cross section

Mat NoR	A[cm2] It[cm4]	Ay/Az/Ayz [cm2]	Iy/Iz/Iyz [cm4]	ys/zs [mm]	modules [N/mm2]	gam [kN/m]
1	2005.60	607.50	17396003.	0.0	210000	15.74
	6270.0	1212.92	398580.9	1300.0	80769	

Additional static properties of cross section

Alfa-T [1/°K]	ymin ymax [mm]	zmin zmax [mm]	hymin hzmin [mm]	AK AB [cm2]	MB	Tau-T Tau-B [1/m3]	Tau-Vy Tau-Vz [1/m2]
1.2E-05	-405.0	-1250.0		1.215E+03		3.165E+02	2.058E+01
	405.0	1250.0				1.255E+02	9.277E+00

Section values for warping

Wmin[cm2]	Wmax[cm2]	CM[cm6]	CMS[cm4]	ASwyy[cm6]	ASwzz[cm6]	ry[mm]	rz[mm]
-4971.38	4971.386005641563.		9153544.2	0.13	5.46	0.0	0.0

Design values of cross section

Mat NoR	A[cm2] It[cm4]	Ay/Az/Ayz [cm2]	Iy/Iz/Iyz [cm4]	ys/zs [mm]	modules [N/mm2]	gam [kN/m]
1	2005.60	607.50	17396003.	0.0	182609	15.74
	6270.0	1212.92	398580.9	1300.0	70234	

SOFiSTiK AG - www.sofistik.de

Composite bridge 38+50+38, b=14.25m, 2x2HL1100R HISTAR460 , slab 0.30m C30/37

Design forces and moments
(C/E = characteristic plastic/elastic, D=plast.Design, F=elast. Design)

	N[kN]	Vy[kN]	Vz[kN]	Mt[kNm]	My[kNm]	Mz[kNm]	y[mm]	z[mm]	BUCK
C	67187.6	14099.76	24691.02	959.21	56225.09	5501.31	0.0	1300.	c c
C	0.0				0.00	0.00	0.0	0.0	COMB
E	67187.6	9399.84	20848.83	611.00	46621.29	3296.90	0.0	1300.	
D	58424.0	12260.66	21470.45	834.10	48891.38	4783.75	0.0	1300.	
D	0.0				0.00	0.00	0.0	0.0	COMB
F	58424.0	8173.78	18129.42	531.31	40540.25	2866.87	0.0	1300.	

Additional Design Data

M	periphery-O/-I [m2/m]	[m2/m]	deff [mm]	t-min [mm]	t-max [mm]	SMP [o/o]	thet-p [tm2/m]	thet-y [tm2/m]	thet-z [tm2/m]	thet-yz [tm2/m]
	8.150		49.2	45.0	52.0	0.0	1.397	1.366	0.031	

Cross section No. 261.2 = CS 10 - prefab. slab C1

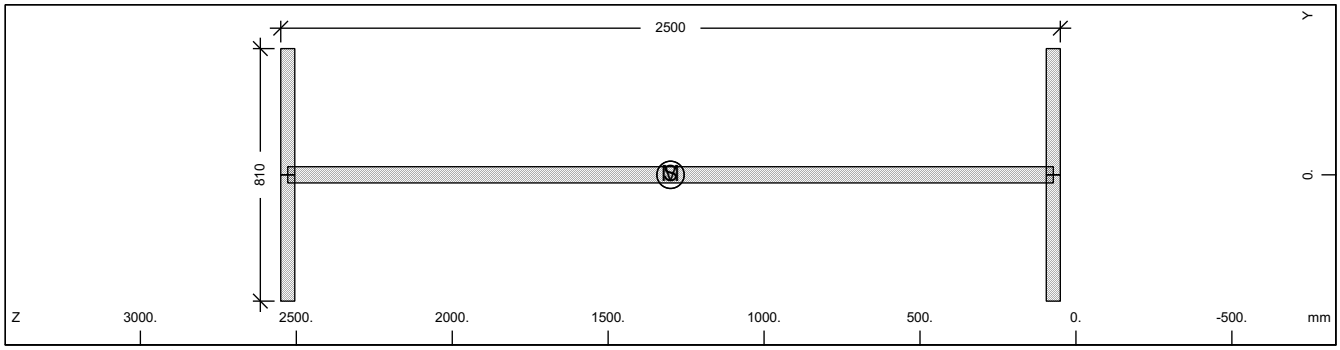

Cross section No. 261

Static properties of cross section

Mat NoR	A[cm2] It[cm4]	Ay/Az/Ayz [cm2]	Iy/Iz/Iyz [cm4]	ys/zs [mm]	modules [N/mm2]	gam [kN/m]
1	2005.60	607.50	17396003.	0.0	210000	15.74
	6270.0	1212.92	398580.9	1300.0	80769	

Additional static properties of cross section

Alfa-T [1/°K]	ymin ymax [mm]	zmin zmax [mm]	hymin hzmin [mm]	AK AB [cm2]	MB	Tau-T Tau-B [1/m3]	Tau-Vy Tau-Vz [1/m2]
1.2E-05	-405.0	-1250.0		1.215E+03		3.165E+02	2.058E+01
	405.0	1250.0				1.255E+02	9.277E+00

Section values for warping

Wmin[cm2]	Wmax[cm2]	CM[cm6]	CMS[cm4]	ASwyy[cm6]	ASwzz[cm6]	ry[mm]	rz[mm]
-4971.38	4971.386005641563.		9153544.2	0.13	5.46	0.0	0.0

Design values of cross section

Mat NoR	A[cm2] It[cm4]	Ay/Az/Ayz [cm2]	Iy/Iz/Iyz [cm4]	ys/zs [mm]	modules [N/mm2]	gam [kN/m]
1	2005.60	607.50	17396003.	0.0	182609	15.74
	6270.0	1212.92	398580.9	1300.0	70234	

Design forces and moments
(C/E = characteristic plastic/elastic, D=plast.Design, F=elast. Design)

	N[kN]	Vy[kN]	Vz[kN]	Mt[kNm]	My[kNm]	Mz[kNm]	y[mm]	z[mm]	BUCK
C	67187.6	14099.76	24691.02	959.21	56225.09	5501.31	0.0	1300.	c c
C	0.0				0.00	0.00	0.0	0.0	COMB
E	67187.6	9399.84	20848.83	611.00	46621.29	3296.90	0.0	1300.	
D	58424.0	12260.66	21470.45	834.10	48891.38	4783.75	0.0	1300.	
D	0.0				0.00	0.00	0.0	0.0	COMB
F	58424.0	8173.78	18129.42	531.31	40540.25	2866.87	0.0	1300.	

SOFiSTiK AG - www.sofistik.de

Composite bridge 38+50+38, b=14.25m, 2x2HL1100R HISTAR460 , slab 0.30m C30/37

Additional Design Data

M	periphery-O/-I [m2/m]	[m2/m]	deff [mm]	t-min [mm]	t-max [mm]	SMP [o/o]	thet-p [tm2/m]	thet-y [tm2/m]	thet-z [tm2/m]	thet-yz [tm2/m]
	8.150		49.2	45.0	52.0	0.0	1.397	1.366	0.031	

Cross section No. 261.3 = CS 20 - in-situ conc:C2

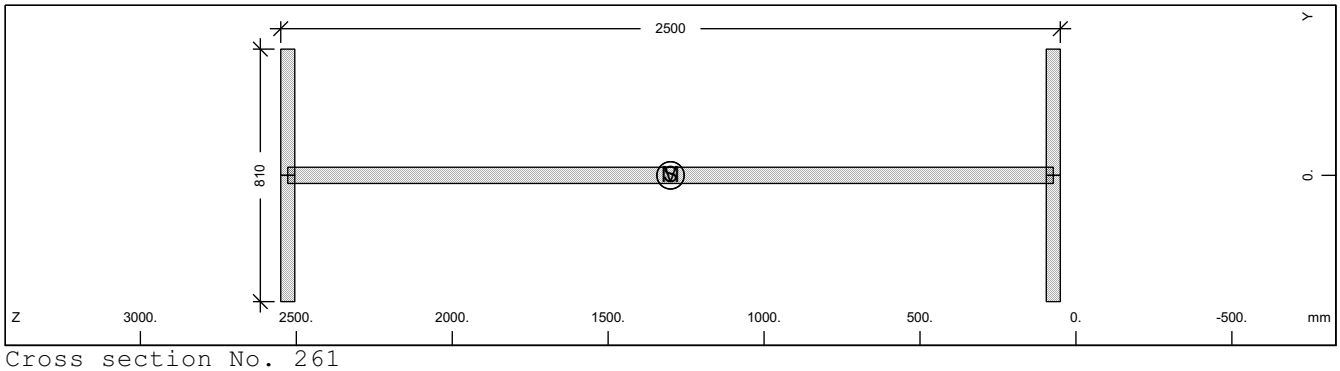

Cross section No. 261

Static properties of cross section

Mat NoR	A[cm2] It[cm4]	Ay/Az/Ayz [cm2]	Iy/Iz/Iyz [cm4]	ys/zs [mm]	modules [N/mm2]	gam [kN/m]
1	2005.60	607.50	17396003.	0.0	210000	15.74
	6270.0	1212.92	398580.9	1300.0	80769	

Additional static properties of cross section

Alfa-T [1/°K]	ymin ymax [mm]	zmin zmax [mm]	hymin hzmin [mm]	AK AB [cm2]	MB	Tau-T Tau-B [1/m3]	Tau-Vy Tau-Vz [1/m2]
1.2E-05	-405.0	-1250.0		1.215E+03		3.165E+02	2.058E+01
	405.0	1250.0				1.255E+02	9.277E+00

Section values for warping

Wmin[cm2]	Wmax[cm2]	CM[cm6]	CMS[cm4]	ASwyy[cm6]	ASwzz[cm6]	ry[mm]	rz[mm]
-4971.38	4971.386005641563.		9153544.2	0.13	5.46	0.0	0.0

Design values of cross section

Mat NoR	A[cm2] It[cm4]	Ay/Az/Ayz [cm2]	Iy/Iz/Iyz [cm4]	ys/zs [mm]	modules [N/mm2]	gam [kN/m]
1	2005.60	607.50	17396003.	0.0	182609	15.74
	6270.0	1212.92	398580.9	1300.0	70234	

Design forces and moments
(C/E = characteristic plastic/elastic, D=plast.Design, F=elast. Design)

	N[kN]	Vy[kN]	Vz[kN]	Mt[kNm]	My[kNm]	Mz[kNm]	y[mm]	z[mm]	BUCK
C	67187.6	14099.76	24691.02	959.21	56225.09	5501.31	0.0	1300.	c c
C	0.0				0.00	0.00	0.0	0.0	COMB
E	67187.6	9399.84	20848.83	611.00	46621.29	3296.90	0.0	1300.	
D	58424.0	12260.66	21470.45	834.10	48891.38	4783.75	0.0	1300.	
D	0.0				0.00	0.00	0.0	0.0	COMB
F	58424.0	8173.78	18129.42	531.31	40540.25	2866.87	0.0	1300.	

Additional Design Data

M	periphery-O/-I [m2/m]	[m2/m]	deff [mm]	t-min [mm]	t-max [mm]	SMP [o/o]	thet-p [tm2/m]	thet-y [tm2/m]	thet-z [tm2/m]	thet-yz [tm2/m]
	8.150		49.2	45.0	52.0	0.0	1.397	1.366	0.031	

SOFiSTiK AG - www.sofistik.de

Composite bridge 38+50+38, b=14.25m, 2x2HL1100R HISTAR460 , slab 0.30m C30/37

Cross section No. 261.4 = CS 21 - reinf active:C2

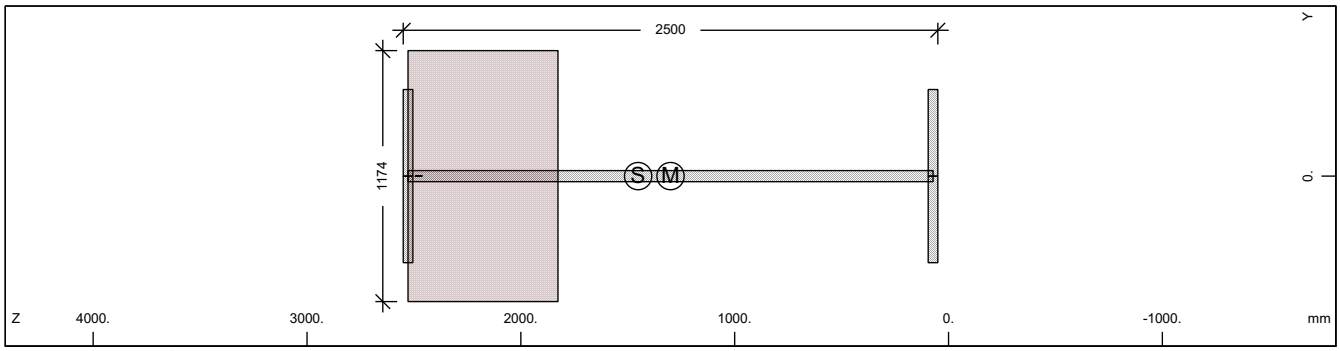

Cross section No. 261

Static properties of cross section

Mat NoR	A[cm2] It[cm4]	Ay/Az/Ayz [cm2]	Iy/Iz/Iyz [cm4]	ys/zs [mm]	modules [N/mm2]	gam [kN/m]
1	2424.23	607.50	20234200.	0.0	210000	36.32
	6270.0	1117.95	398580.9	1451.5	80769	

Additional static properties of cross section

Alfa-T [1/°K]	ymin ymax [mm]	zmin zmax [mm]	hymin hzmin [mm]	AK AB [cm2]	MB	Tau-T Tau-B [1/m3]	Tau-Vy Tau-Vz [1/m2]
1.2E-05	-587.0	-1401.5		5.530E+03		3.081E+00	2.058E+01
	587.0	1098.5		8.230E+03		1.255E+02	9.476E+00

Section values for warping

Wmin[cm2]	Wmax[cm2]	CM[cm6]	CMS[cm4]	ASwyy[cm6]	ASwzz[cm6]	ry[mm]	rz[mm]
-4971.38	4971.38	6005641563.	9153544.2	1.33	67.71	0.0	3.4

Partial cross sections

Mat NoR	A[cm2] It[cm4]	Ay/Az/Ayz [cm2]	Iy/Iz/Iyz [cm4]	ys/zs [mm]	modules [N/mm2]	gam [kN/m]
1	2005.60	607.50	17396003.	0.0	210000	15.74
	16427.2	1110.01	398580.9	1300.0	80769	
25	8229.74		3370085.0	0.0	10667	20.57
	37809512.	144.27	0.0	2177.0	4444	
210	0.64	0.00	0.0	0.0	200000	0.00
	2.2	0.00	0.0	2477.5	76923	

Design values of cross section

Mat NoR	A[cm2] It[cm4]	Ay/Az/Ayz [cm2]	Iy/Iz/Iyz [cm4]	ys/zs [mm]	modules [N/mm2]	gam [kN/m]
1	2326.69	607.50	19659379.	0.0	182609	36.32
	6270.0	1116.10	398580.9	1421.1	70234	

Design forces and moments
(C/E = characteristic plastic/elastic, D=plast.Design, F=elast. Design)

	N[kN]	Vy[kN]	Vz[kN]	Mt[kNm]	My[kNm]	Mz[kNm]	y[mm]	z[mm]	BUCK
C	67219.8	14118.33	38731.97	8937.81	56262.93	9260.35	7.3	1301.	c c
C	-5246.9				56658.02	0.00	0.0	1452.	COMB
C	-12344.6				0.00	9124.71	0.0	0.0	COMB
C	-91909.0	14118.33	38731.97	8937.81	-69438.1	-9080.62	-7.1	1918.	
C	-19442.4				-74569.5	0.00	0.0	1452.	COMB
C	-12344.6				0.00	-9124.71	0.0	0.0	COMB
E	81211.7	9399.84	20409.71	5355.91	48364.98	3296.90	0.0	1452.	
E	-81211.7	9399.84	20409.71	5355.91	-48365.0	-3296.90	0.0	1452.	
D	58452.0	12276.81	30924.80	6154.72	48924.29	7267.20	5.5	1301.	
D	-4562.5				49267.84	0.00	0.0	1452.	COMB
D	-8229.7				0.00	7199.40	0.0	0.0	COMB
D	-74911.4	12276.81	30924.80	6154.72	-52380.5	-7176.81	-5.5	1764.	
D	-11897.0				-61208.8	0.00	0.0	1452.	COMB
D	-8229.7				0.00	-7199.40	0.0	0.0	COMB

SOFiSTiK AG - www.sofistik.de

Composite bridge 38+50+38, b=14.25m, 2x2HL1100R HISTAR460 , slab 0.30m C30/37

Design forces and moments
(C/E = characteristic plastic/elastic, D=plast.Design, F=elast. Design)

	N[kN]	Vy[kN]	Vz[kN]	Mt[kNm]	My[kNm]	Mz[kNm]	y[mm]	z[mm]	BUCK
F	70618.9	8173.78	17747.57	3570.60	42056.51	2866.87	0.0	1452.	
F	-70618.9	8173.78	17747.57	3570.60	-42056.5	-2866.87	0.0	1452.	

Additional Design Data

M	periphery-O/-I [m2/m]	[m2/m]	deff [mm]	t-min [mm]	t-max [mm]	SMP [o/o]	thet-p [tm2/m]	thet-y [tm2/m]	thet-z [tm2/m]	thet-yz [tm2/m]
	9.556		50.7	32.0	701.0	0.0	2.167	2.136	0.031	
1	8.150		49.2	45.0	52.0	0.0	1.397	1.366	0.031	
25	1.402		1174.0			0.0	0.084	0.084		
**	0.004		32.0			0.0	0.000		0.000	

Cross section No. 261.5 = CS 30 - in-situ conc:C3

Cross section No. 262 - VFT (253)

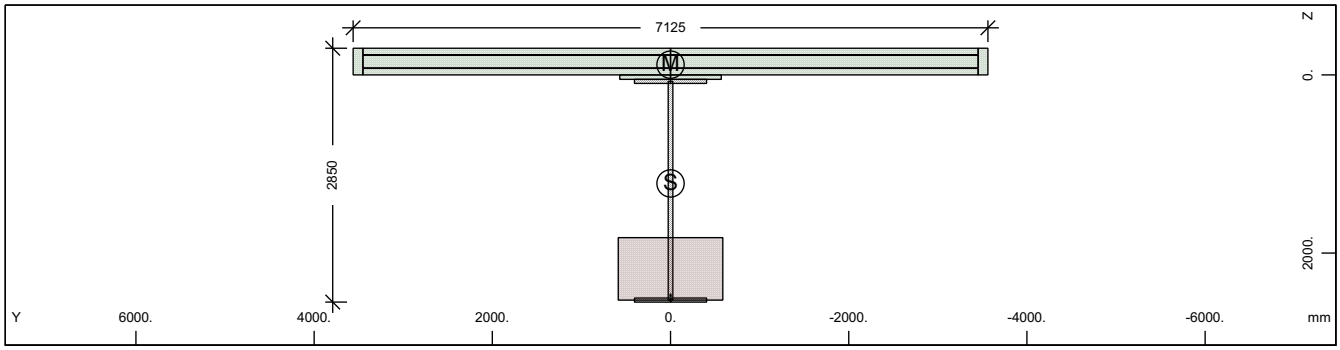

Cross section No. 262 - VFT (253)

Static properties of cross section

Mat NoR	A[cm2] It[cm4]	Ay/Az/Ayz [cm2]	Iy/Iz/Iyz [cm4]	ys/zs [mm]	y/z-sc [mm]	modules [N/mm2]	gam [kN/m]
1	2837.22	360.96	29308114.	0.0	0.0	210000	91.18
	6270.0	859.21	16807513.	1218.4	-115.6	80769	

Additional static properties of cross section

Alfa-T [1/°K]	ymin ymax [mm]	zmin zmax [mm]	hymin hzmin [mm]	AK AB [cm2]	MB	Tau-T Tau-B [1/m3]	Tau-Vy Tau-Vz [1/m2]
1.2E-05	-3562.5	-1518.4		5.530E+03		3.081E+00	3.377E+01
	3562.5	1331.6		3.017E+04		1.255E+02	1.619E+01

Section values for warping

Wmin[cm2]	Wmax[cm2]	CM[cm6]	CMS[cm4]	ASwyy[cm6]	ASwzz[cm6]	ry[mm]	rz[mm]
-10704.61	10704.61	1.511E+10	3656580.3	235.99	411.51	0.0	1827.2

Partial cross sections

Mat NoR	A[cm2] It[cm4]	Ay/Az/Ayz [cm2]	Iy/Iz/Iyz [cm4]	ys/zs [mm]	modules [N/mm2]	gam [kN/m]
1	2005.60	0.12	17396003.	0.0	210000	15.74
	16427.2	587.52	398580.9	1300.0	80769	
25	8229.74		3370085.0	0.0	10667	20.57
	37809512.	75.34	0.0	2177.0	4444	
210	0.64	0.00	0.0	0.0	200000	0.00
	2.2	0.00	0.0	2477.5	76923	
31	21945.00	18040.52	170028.4	0.0	0	54.86
	6417251.4	12406.34	904880243.	-145.5	0	
300	433.63	378.88	24391.9	0.0	200000	0.00
	14.3	280.39	17229374.	-150.0	76923	

SOFiSTiK AG - www.sofistik.de

Composite bridge 38+50+38, b=14.25m, 2x2HL1100R HISTAR460 , slab 0.30m C30/37

Design values of cross section

Mat NoR	A[cm2] It[cm4]	Ay/Az/Ayz [cm2]	Iy/Iz/Iyz [cm4]	ys/zs [mm]	modules [N/mm2]	gam [kN/m]
1	2739.68	360.96	28339985.	0.0	182609	91.18
	6270.0	857.73	16807512.	1184.3	70234	

Design forces and moments
(C/E = characteristic plastic/elastic, D=plast.Design, F=elast. Design)

	N[kN]	Vy[kN]	Vz[kN]	Mt[kNm]	My[kNm]	Mz[kNm]	y[mm]	z[mm]	BUCK
C	88901.5	62845.51	67532.41	107524.5	99505.38	103961.3	26.0	-73.8	c c
C	-84641.8				175840.5	0.00	0.0	1218.	COMB
C	-45262.1				0.00	103907.8	0.0	0.0	COMB
C	-166226.	62845.51	67532.41	107524.5	-109221.	-103321.	-26.0	1387.	
C	-5882.5				-109718.	0.00	0.0	1218.	COMB
C	-45262.1				0.00	-103908.	0.0	0.0	COMB
E	95046.7	8548.00	17826.45	5355.94	73732.73	25558.13	0.0	1218.	
E	-95046.7	8548.00	17826.45	5355.94	-73732.7	-25558.1	0.0	1218.	
D	77305.6	47301.47	50661.32	71896.67	85226.16	78009.66	20.0	-22.1	
D	-60243.7				134686.6	0.00	0.0	1218.	COMB
D	-30174.7				0.00	77982.20	0.0	0.0	COMB
D	-128855.	47301.47	50661.32	71896.66	-90604.7	-77680.9	-20.0	1222.	
D	-105.8				-90604.8	0.00	0.0	1218.	COMB
D	-30174.7				0.00	-77982.2	0.0	0.0	COMB
F	82649.3	7433.05	15501.26	3570.63	64115.41	22224.46	0.0	1218.	
F	-82649.3	7433.05	15501.26	3570.63	-64115.4	-22224.5	0.0	1218.	

Additional Design Data

M	periphery-O/-I [m2/m]	[m2/m]	deff [mm]	t-min [mm]	t-max [mm]	SMP [o/o]	thet-p [tm2/m]	thet-y [tm2/m]	thet-z [tm2/m]	thet-yz [tm2/m]
	53.706		10.6	3.1	701.0	0.0	33.037	10.384	22.653	
1	8.150		49.2	45.0	52.0	0.0	1.397	1.366	0.031	
25	1.402		1174.0			0.0	0.084	0.084		
**	0.004		32.0			0.0	0.000		0.000	
31	16.530		265.5	50.0	300.0	0.0	22.626	0.004	22.622	
**	27.620		3.1	3.1	3.1	0.0	0.000	0.000	0.000	

Cross section No. 262.1 = CS 1 - steel alone

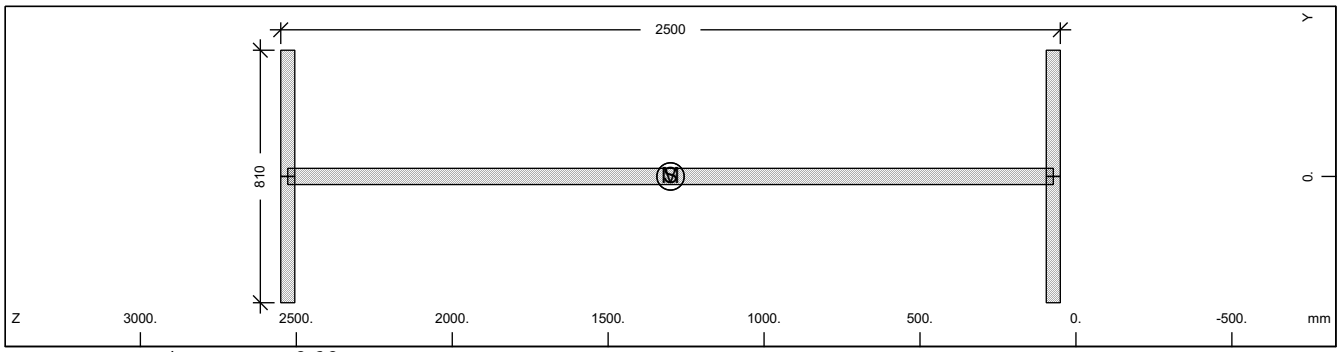

Cross section No. 262

Static properties of cross section

Mat NoR	A[cm2] It[cm4]	Ay/Az/Ayz [cm2]	Iy/Iz/Iyz [cm4]	ys/zs [mm]	modules [N/mm2]	gam [kN/m]
1	2005.60	607.50	17396003.	0.0	210000	15.74
	6270.0	1212.92	398580.9	1300.0	80769	

Additional static properties of cross section

Alfa-T [1/°K]	ymin ymax [mm]	zmin zmax [mm]	hymin hzmin [mm]	AK AB [cm2]	MB	Tau-T Tau-B [1/m3]	Tau-Vy Tau-Vz [1/m2]
1.2E-05	-405.0	-1250.0		1.215E+03		3.165E+02	2.058E+01
	405.0	1250.0				1.255E+02	9.277E+00

SOFiSTiK AG - www.sofistik.de

Composite bridge 38+50+38, b=14.25m, 2x2HL1100R HISTAR460 , slab 0.30m C30/37

Section values for warping

Wmin[cm2]	Wmax[cm2]	CM[cm6]	CMS[cm4]	ASwyy[cm6]	ASwzz[cm6]	ry[mm]	rz[mm]
-4971.38	4971.386005641563.	9153544.2		0.13	5.46	0.0	0.0

Design values of cross section

Mat NoR	A[cm2] It[cm4]	Ay/Az/Ayz [cm2]	Iy/Iz/Iyz [cm4]	ys/zs [mm]	modules [N/mm2]	gam [kN/m]
1	2005.60	607.50	17396003.	0.0	182609	15.74
	6270.0	1212.92	398580.9	1300.0	70234	

Design forces and moments
(C/E = characteristic plastic/elastic, D=plast.Design, F=elast. Design)

	N[kN]	Vy[kN]	Vz[kN]	Mt[kNm]	My[kNm]	Mz[kNm]	y[mm]	z[mm]	BUCK
C	67187.6	14099.76	24691.02	959.21	56225.09	5501.31	0.0	1300.	c c
C	0.0				0.00	0.00	0.0	0.0	COMB
E	67187.6	9399.84	20848.83	611.00	46621.29	3296.90	0.0	1300.	
D	58424.0	12260.66	21470.45	834.10	48891.38	4783.75	0.0	1300.	
D	0.0				0.00	0.00	0.0	0.0	COMB
F	58424.0	8173.78	18129.42	531.31	40540.25	2866.87	0.0	1300.	

Additional Design Data

M	periphery-O/-I [m2/m]	[m2/m]	deff [mm]	t-min [mm]	t-max [mm]	SMP [o/o]	thet-p [tm2/m]	thet-y [tm2/m]	thet-z [tm2/m]	thet-yz [tm2/m]
	8.150		49.2	45.0	52.0	0.0	1.397	1.366	0.031	

Cross section No. 262.2 = CS 10 - prefab. slab C1

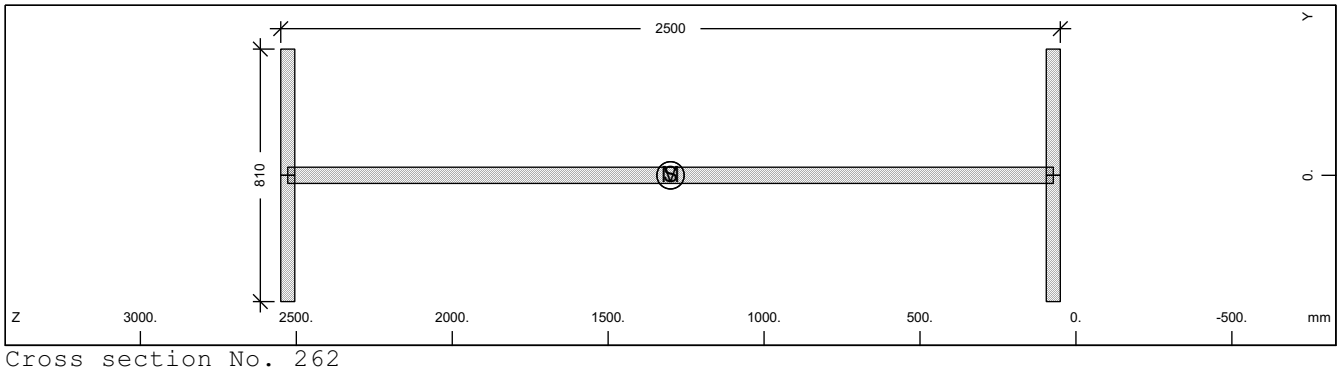

Cross section No. 262

Static properties of cross section

Mat NoR	A[cm2] It[cm4]	Ay/Az/Ayz [cm2]	Iy/Iz/Iyz [cm4]	ys/zs [mm]	modules [N/mm2]	gam [kN/m]
1	2005.60	607.50	17396003.	0.0	210000	15.74
	6270.0	1212.92	398580.9	1300.0	80769	

Additional static properties of cross section

Alfa-T [1/°K]	ymin ymax [mm]	zmin zmax [mm]	hymin hzmin [mm]	AK AB [cm2]	MB	Tau-T Tau-B [1/m3]	Tau-Vy Tau-Vz [1/m2]
1.2E-05	-405.0	-1250.0		1.215E+03		3.165E+02	2.058E+01
	405.0	1250.0				1.255E+02	9.277E+00

Section values for warping

Wmin[cm2]	Wmax[cm2]	CM[cm6]	CMS[cm4]	ASwyy[cm6]	ASwzz[cm6]	ry[mm]	rz[mm]
-4971.38	4971.386005641563.	9153544.2		0.13	5.46	0.0	0.0

Design values of cross section

Mat NoR	A[cm2] It[cm4]	Ay/Az/Ayz [cm2]	Iy/Iz/Iyz [cm4]	ys/zs [mm]	modules [N/mm2]	gam [kN/m]
1	2005.60	607.50	17396003.	0.0	182609	15.74
	6270.0	1212.92	398580.9	1300.0	70234	

SOFiSTiK AG - www.sofistik.de

Composite bridge 38+50+38, b=14.25m, 2x2HL1100R HISTAR460 , slab 0.30m C30/37

Design forces and moments
(C/E = characteristic plastic/elastic, D=plast.Design, F=elast. Design)

	N[kN]	Vy[kN]	Vz[kN]	Mt[kNm]	My[kNm]	Mz[kNm]	y[mm]	z[mm]	BUCK
C	67187.6	14099.76	24691.02	959.21	56225.09	5501.31	0.0	1300.	c c
C	0.0				0.00	0.00	0.0	0.0	COMB
E	67187.6	9399.84	20848.83	611.00	46621.29	3296.90	0.0	1300.	
D	58424.0	12260.66	21470.45	834.10	48891.38	4783.75	0.0	1300.	
D	0.0				0.00	0.00	0.0	0.0	COMB
F	58424.0	8173.78	18129.42	531.31	40540.25	2866.87	0.0	1300.	

Additional Design Data

M	periphery-O/-I [m2/m]	[m2/m]	deff [mm]	t-min [mm]	t-max [mm]	SMP [o/o]	thet-p [tm2/m]	thet-y [tm2/m]	thet-z [tm2/m]	thet-yz [tm2/m]
	8.150		49.2	45.0	52.0	0.0	1.397	1.366	0.031	

Cross section No. 262.3 = CS 20 - in-situ conc:C2

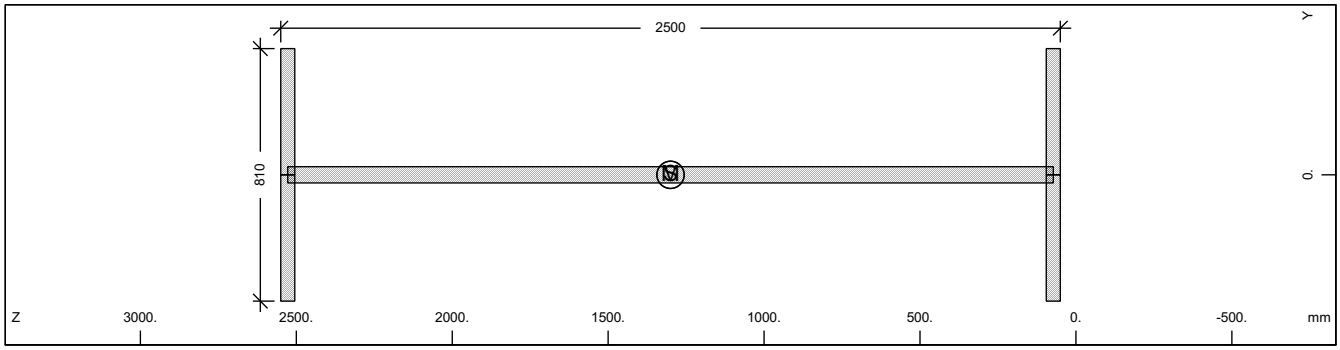

Cross section No. 262

Static properties of cross section

Mat NoR	A[cm2] It[cm4]	Ay/Az/Ayz [cm2]	Iy/Iz/Iyz [cm4]	ys/zs [mm]	modules [N/mm2]	gam [kN/m]
1	2005.60	607.50	17396003.	0.0	210000	15.74
	6270.0	1212.92	398580.9	1300.0	80769	

Additional static properties of cross section

Alfa-T [1/°K]	ymin ymax [mm]	zmin zmax [mm]	hymin hzmin [mm]	AK AB [cm2]	MB	Tau-T Tau-B [1/m3]	Tau-Vy Tau-Vz [1/m2]
1.2E-05	-405.0	-1250.0		1.215E+03		3.165E+02	2.058E+01
	405.0	1250.0				1.255E+02	9.277E+00

Section values for warping

Wmin[cm2]	Wmax[cm2]	CM[cm6]	CMS[cm4]	ASwyy[cm6]	ASwzz[cm6]	ry[mm]	rz[mm]
-4971.38	4971.386005641563.		9153544.2	0.13	5.46	0.0	0.0

Design values of cross section

Mat NoR	A[cm2] It[cm4]	Ay/Az/Ayz [cm2]	Iy/Iz/Iyz [cm4]	ys/zs [mm]	modules [N/mm2]	gam [kN/m]
1	2005.60	607.50	17396003.	0.0	182609	15.74
	6270.0	1212.92	398580.9	1300.0	70234	

Design forces and moments
(C/E = characteristic plastic/elastic, D=plast.Design, F=elast. Design)

	N[kN]	Vy[kN]	Vz[kN]	Mt[kNm]	My[kNm]	Mz[kNm]	y[mm]	z[mm]	BUCK
C	67187.6	14099.76	24691.02	959.21	56225.09	5501.31	0.0	1300.	c c
C	0.0				0.00	0.00	0.0	0.0	COMB
E	67187.6	9399.84	20848.83	611.00	46621.29	3296.90	0.0	1300.	
D	58424.0	12260.66	21470.45	834.10	48891.38	4783.75	0.0	1300.	
D	0.0				0.00	0.00	0.0	0.0	COMB
F	58424.0	8173.78	18129.42	531.31	40540.25	2866.87	0.0	1300.	

SOFiSTiK AG - www.sofistik.de

Composite bridge 38+50+38, b=14.25m, 2x2HL1100R HISTAR460 , slab 0.30m C30/37

Additional Design Data

M	periphery-O/-I [m2/m]	[m2/m]	deff [mm]	t-min [mm]	t-max [mm]	SMP [o/o]	thet-p [tm2/m]	thet-y [tm2/m]	thet-z [tm2/m]	thet-yz [tm2/m]
	8.150		49.2	45.0	52.0	0.0	1.397	1.366	0.031	

Cross section No. 262.4 = CS 21 - reinf active:C2

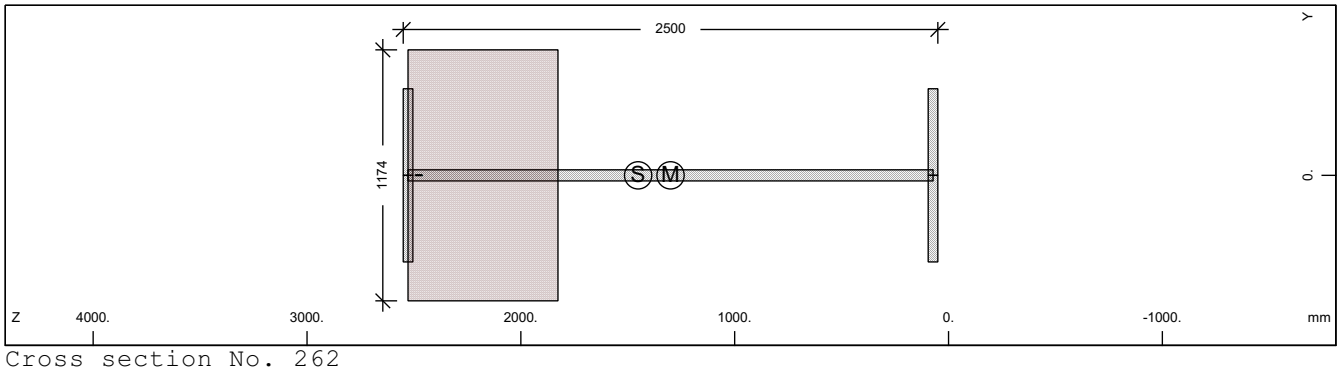

Cross section No. 262

Static properties of cross section

Mat NoR	A[cm2] It[cm4]	Ay/Az/Ayz [cm2]	Iy/Iz/Iyz [cm4]	ys/zs [mm]	modules [N/mm2]	gam [kN/m]
1	2424.23	607.50	20234200.	0.0	210000	36.32
	6270.0	1117.95	398580.9	1451.5	80769	

Additional static properties of cross section

Alfa-T [1/°K]	ymin ymax [mm]	zmin zmax [mm]	hymin hzmin [mm]	AK AB [cm2]	MB	Tau-T Tau-B [1/m3]	Tau-Vy Tau-Vz [1/m2]
1.2E-05	-587.0	-1401.5		5.530E+03		3.081E+00	2.058E+01
	587.0	1098.5		8.230E+03		1.255E+02	9.476E+00

Section values for warping

Wmin[cm2]	Wmax[cm2]	CM[cm6]	CMS[cm4]	ASwyy[cm6]	ASwzz[cm6]	ry[mm]	rz[mm]
-4971.38	4971.38	6005641563.	9153544.2	1.33	67.71	0.0	3.4

Partial cross sections

Mat NoR	A[cm2] It[cm4]	Ay/Az/Ayz [cm2]	Iy/Iz/Iyz [cm4]	ys/zs [mm]	modules [N/mm2]	gam [kN/m]
1	2005.60	607.50	17396003.	0.0	210000	15.74
	16427.2	1110.01	398580.9	1300.0	80769	
25	8229.74		3370085.0	0.0	10667	20.57
	37809512.	144.27	0.0	2177.0	4444	
210	0.64	0.00	0.0	0.0	200000	0.00
	2.2	0.00	0.0	2477.5	76923	

Design values of cross section

Mat NoR	A[cm2] It[cm4]	Ay/Az/Ayz [cm2]	Iy/Iz/Iyz [cm4]	ys/zs [mm]	modules [N/mm2]	gam [kN/m]
1	2326.69	607.50	19659379.	0.0	182609	36.32
	6270.0	1116.10	398580.9	1421.1	70234	

Design forces and moments
(C/E = characteristic plastic/elastic, D=plast.Design, F=elast. Design)

	N[kN]	Vy[kN]	Vz[kN]	Mt[kNm]	My[kNm]	Mz[kNm]	y[mm]	z[mm]	BUCK
C	67219.8	14118.33	38731.97	8937.81	56262.93	9260.35	7.3	1301.	c c
C	-5246.9				56658.02	0.00	0.0	1452.	COMB
C	-12344.6				0.00	9124.71	0.0	0.0	COMB
C	-91909.0	14118.33	38731.97	8937.81	-69438.1	-9080.62	-7.1	1918.	
C	-19442.4				-74569.5	0.00	0.0	1452.	COMB
C	-12344.6				0.00	-9124.71	0.0	0.0	COMB
E	81211.7	9399.84	20409.71	5355.91	48364.98	3296.90	0.0	1452.	
E	-81211.7	9399.84	20409.71	5355.91	-48365.0	-3296.90	0.0	1452.	
D	58452.0	12276.81	30924.80	6154.72	48924.29	7267.20	5.5	1301.	

SOFiSTiK AG - www.sofistik.de

Composite bridge 38+50+38, b=14.25m, 2x2HL1100R HISTAR460 , slab 0.30m C30/37

Design forces and moments
(C/E = characteristic plastic/elastic, D=plast.Design, F=elast. Design)

	N[kN]	Vy[kN]	Vz[kN]	Mt[kNm]	My[kNm]	Mz[kNm]	y[mm]	z[mm]	BUCK
D	-4562.5				49267.84	0.00	0.0	1452.	COMB
D	-8229.7				0.00	7199.40	0.0	0.0	COMB
D	-74911.4	12276.81	30924.80	6154.72	-52380.5	-7176.81	-5.5	1764.	
D	-11897.0				-61208.8	0.00	0.0	1452.	COMB
D	-8229.7				0.00	-7199.40	0.0	0.0	COMB
F	70618.9	8173.78	17747.57	3570.60	42056.51	2866.87	0.0	1452.	
F	-70618.9	8173.78	17747.57	3570.60	-42056.5	-2866.87	0.0	1452.	

Additional Design Data

M	periphery-O/-I [m2/m]	[m2/m]	deff [mm]	t-min [mm]	t-max [mm]	SMP [o/o]	thet-p [tm2/m]	thet-y [tm2/m]	thet-z [tm2/m]	thet-yz [tm2/m]
	9.556		50.7	32.0	701.0	0.0	2.167	2.136	0.031	
1	8.150		49.2	45.0	52.0	0.0	1.397	1.366	0.031	
25	1.402		1174.0			0.0	0.084	0.084		
**	0.004		32.0			0.0	0.000		0.000	

Cross section No. 262.5 = CS 30 - in-situ conc:C3

Cross section No. 263 - VFT (253)

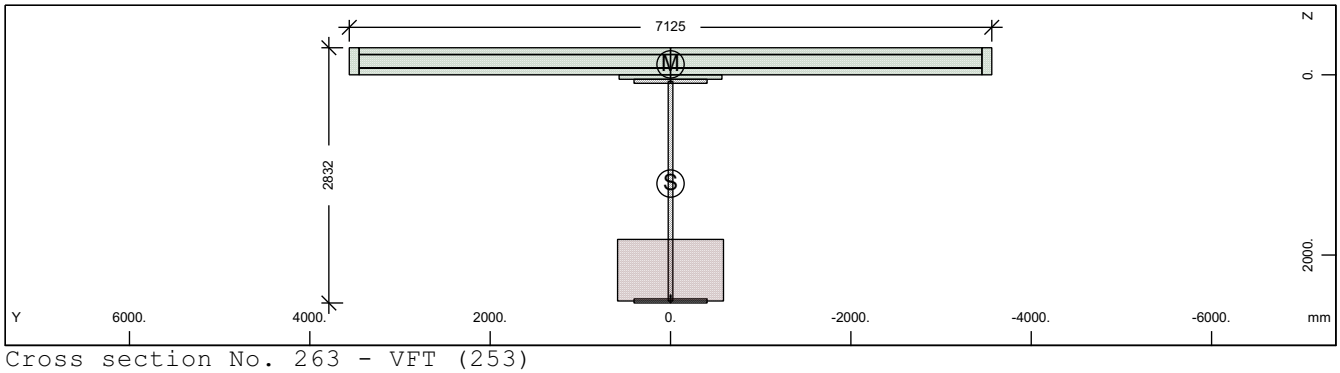

Cross section No. 263 - VFT (253)

Static properties of cross section

Mat NoR	A[cm2] It[cm4]	Ay/Az/Ayz [cm2]	Iy/Iz/Iyz [cm4]	ys/zs [mm]	y/z-sc [mm]	modules [N/mm2]	gam [kN/m]
1	2817.15	361.08	28793413.	0.0	0.0	210000	90.58
	6270.0	851.58	16827153.	1206.6	-115.9	80769	

Additional static properties of cross section

Alfa-T [1/°K]	ymin ymax [mm]	zmin zmax [mm]	hymin hzmin [mm]	AK AB [cm2]	MB	Tau-T Tau-B [1/m3]	Tau-Vy Tau-Vz [1/m2]
1.2E-05	-3562.5	-1506.6		5.388E+03		3.162E+00	3.376E+01
	3562.5	1325.2		2.996E+04		1.255E+02	1.636E+01

Section values for warping

Wmin[cm2]	Wmax[cm2]	CM[cm6]	CMS[cm4]	ASwyy[cm6]	ASwzz[cm6]	ry[mm]	rz[mm]
-10632.26	10632.26	1.492E+10	3574510.7	142.48	243.80	0.0	1803.0

Partial cross sections

Mat NoR	A[cm2] It[cm4]	Ay/Az/Ayz [cm2]	Iy/Iz/Iyz [cm4]	ys/zs [mm]	modules [N/mm2]	gam [kN/m]
1	1996.18	0.12	17093516.	0.0	210000	15.67
	16342.2	579.67	398580.9	1290.9	80769	
25	8017.00		3115433.8	0.0	10667	20.04
	36832139.	71.67	0.0	2167.9	4444	
210	0.64	0.00	0.0	0.0	200000	0.00
	2.2	0.00	0.0	2459.4	76923	
31	21945.00	18010.78	170028.4	0.0	0	54.86
	6417251.4	12410.53	904880243.	-145.5	0	

SOFiSTiK AG - www.sofistik.de

Composite bridge 38+50+38, b=14.25m, 2x2HL1100R HISTAR460 , slab 0.30m C30/37

300	433.81	379.01	24401.6	0.0	200000	0.00
	14.3	280.83	17249996.	-150.0	76923	

Design values of cross section

Mat	A[cm2]	Ay/Az/Ayz	Iy/Iz/Iyz	ys/zs	modules	gam
NoR	It[cm4]	[cm2]	[cm4]	[mm]	[N/mm2]	[kN/m]
1	2722.14	361.08	27847797.	0.0	182609	90.58
	6270.0	850.15	16827151.	1173.1	70234	

Design forces and moments
(C/E = characteristic plastic/elastic, D=plast.Design, F=elast. Design)

	N[kN]	Vy[kN]	Vz[kN]	Mt[kNm]	My[kNm]	Mz[kNm]	y[mm]	z[mm]	BUCK
C	88594.4	62850.50	66999.15	107313.7	98465.90	103881.0	26.0	-73.9	c c
C	-84556.2				174223.1	0.00	0.0	1207.	COMB
C	-44943.0				0.00	103839.9	0.0	0.0	COMB
C	-165446.	62850.50	66999.15	107313.7	-107920.	-103257.	-26.0	1360.	
C	-5329.8				-108328.	0.00	0.0	1207.	COMB
C	-44943.0				0.00	-103840.	0.0	0.0	COMB
E	94374.6	8551.17	17650.25	5218.36	72785.35	25577.79	0.0	1207.	
E	-94374.6	8551.17	17650.25	5218.36	-72785.4	-25577.8	0.0	1207.	
D	77038.6	47305.81	50268.83	71755.20	84336.59	77963.24	20.0	-24.1	
D	-60169.3				133437.3	0.00	0.0	1207.	COMB
D	-29962.0				0.00	77942.16	0.0	0.0	COMB
D	-128273.	47305.81	50268.83	71755.18	-89506.3	-77642.9	-20.0	1199.	
D	245.3				-89507.3	0.00	0.0	1207.	COMB
D	-29962.0				0.00	-77942.2	0.0	0.0	COMB
F	82064.9	7435.80	15348.05	3478.91	63291.61	22241.56	0.0	1207.	
F	-82064.9	7435.80	15348.05	3478.91	-63291.6	-22241.6	0.0	1207.	

Additional Design Data

M	periphery-O/-I		deff	t-min	t-max	SMP	thet-p	thet-y	thet-z	thet-yz
	[m2/m]	[m2/m]	[mm]	[mm]	[mm]	[o/o]	[tm2/m]	[tm2/m]	[tm2/m]	[tm2/m]
	53.645		10.5	3.1	682.9	0.0	32.799	10.146	22.653	
1	8.114		49.2	45.0	52.0	0.0	1.373	1.342	0.031	
25	1.366		1174.0			0.0	0.078	0.078		
**	0.004		32.0			0.0	0.000		0.000	
31	16.530		265.5	50.0	300.0	0.0	22.626	0.004	22.622	
**	27.631		3.1	3.1	3.1	0.0	0.000	0.000	0.000	

Cross section No. 263.1 = CS 1 - steel alone

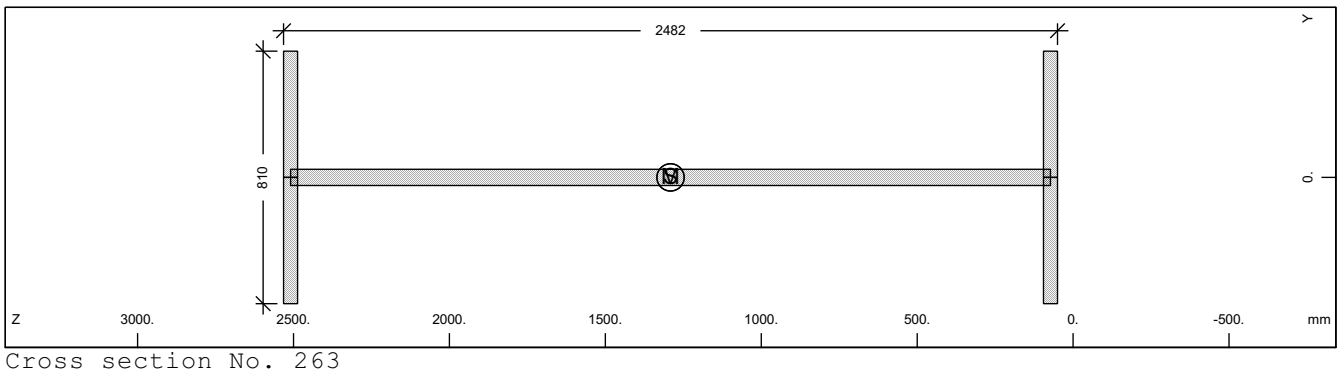

Cross section No. 263

Static properties of cross section

Mat	A[cm2]	Ay/Az/Ayz	Iy/Iz/Iyz	ys/zs	modules	gam
NoR	It[cm4]	[cm2]	[cm4]	[mm]	[N/mm2]	[kN/m]
1	1996.18	607.50	17093516.	0.0	210000	15.67
	6270.0	1203.88	398580.9	1290.9	80769	

SOFiSTiK AG - www.sofistik.de

Composite bridge 38+50+38, b=14.25m, 2x2HL1100R HISTAR460 , slab 0.30m C30/37

Additional static properties of cross section

Alfa-T	ymin ymax	zmin zmax	hymin hzmin	AK AB	MB	Tau-T Tau-B	Tau-Vy Tau-Vz
[1/°K]	[mm]	[mm]	[mm]	[cm2]		[1/m3]	[1/m2]
1.2E-05	-405.0	-1240.9		1.209E+03		3.182E+02	2.058E+01
	405.0	1240.9				1.255E+02	9.339E+00

Section values for warping

Wmin[cm2]	Wmax[cm2]	CM[cm6]	CMS[cm4]	ASwyy[cm6]	ASwzz[cm6]	ry[mm]	rz[mm]
-4934.68	4934.685917311670.		9018915.9	5.76	246.93	0.0	0.0

Design values of cross section

Mat NoR	A[cm2] It[cm4]	Ay/Az/Ayz [cm2]	Iy/Iz/Iyz [cm4]	ys/zs [mm]	modules [N/mm2]	gam [kN/m]
1	1996.18	607.50	17093516.	0.0	182609	15.67
	6270.0	1203.88	398580.9	1290.9	70234	

Design forces and moments
(C/E = characteristic plastic/elastic, D=plast.Design, F=elast. Design)

	N[kN]	Vy[kN]	Vz[kN]	Mt[kNm]	My[kNm]	Mz[kNm]	y[mm]	z[mm]	BUCK
C	66871.9	14099.76	24508.77	954.47	55617.77	5497.21	0.0	1291.	c c
C	0.0				0.00	0.00	0.0	0.0	COMB
E	66871.9	9399.84	20710.00	607.84	46145.10	3296.90	0.0	1291.	
D	58149.5	12260.66	21311.98	829.98	48363.28	4780.18	0.0	1291.	
D	0.0				0.00	0.00	0.0	0.0	COMB
F	58149.5	8173.78	18008.70	528.56	40126.18	2866.87	0.0	1291.	

Additional Design Data

M	periphery-O/-I [m2/m]	[m2/m]	deff [mm]	t-min [mm]	t-max [mm]	SMP [o/o]	thet-p [tm2/m]	thet-y [tm2/m]	thet-z [tm2/m]	thet-yz [tm2/m]
	8.114		49.2	45.0	52.0	0.0	1.373	1.342	0.031	

Cross section No. 263.2 = CS 10 - prefab. slab C1

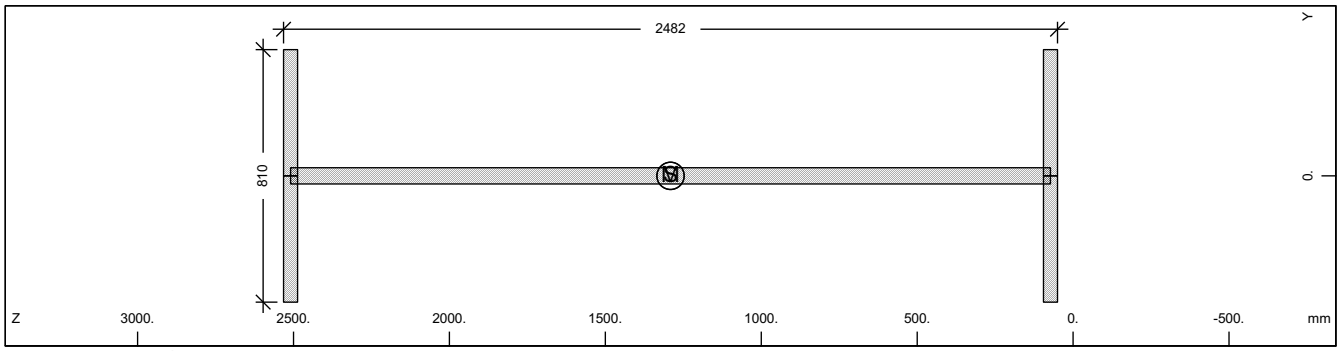

Cross section No. 263

Static properties of cross section

Mat NoR	A[cm2] It[cm4]	Ay/Az/Ayz [cm2]	Iy/Iz/Iyz [cm4]	ys/zs [mm]	modules [N/mm2]	gam [kN/m]
1	1996.18	607.50	17093516.	0.0	210000	15.67
	6270.0	1203.88	398580.9	1290.9	80769	

Additional static properties of cross section

Alfa-T	ymin ymax	zmin zmax	hymin hzmin	AK AB	MB	Tau-T Tau-B	Tau-Vy Tau-Vz
[1/°K]	[mm]	[mm]	[mm]	[cm2]		[1/m3]	[1/m2]
1.2E-05	-405.0	-1240.9		1.209E+03		3.182E+02	2.058E+01
	405.0	1240.9				1.255E+02	9.339E+00

Section values for warping

Wmin[cm2]	Wmax[cm2]	CM[cm6]	CMS[cm4]	ASwyy[cm6]	ASwzz[cm6]	ry[mm]	rz[mm]
-4934.68	4934.685917311670.		9018915.9	5.76	246.93	0.0	0.0

SOFiSTiK AG - www.sofistik.de

Composite bridge 38+50+38, b=14.25m, 2x2HL1100R HISTAR460 , slab 0.30m C30/37

Design values of cross section

Mat NoR	A[cm2] It[cm4]	Ay/Az/Ayz [cm2]	Iy/Iz/Iyz [cm4]	ys/zs [mm]	modules [N/mm2]	gam [kN/m]
1	1996.18	607.50	17093516.	0.0	182609	15.67
	6270.0	1203.88	398580.9	1290.9	70234	

Design forces and moments
(C/E = characteristic plastic/elastic, D=plast.Design, F=elast. Design)

	N[kN]	Vy[kN]	Vz[kN]	Mt[kNm]	My[kNm]	Mz[kNm]	y[mm]	z[mm]	BUCK
C	66871.9	14099.76	24508.77	954.47	55617.77	5497.21	0.0	1291.	c c
C	0.0				0.00	0.00	0.0	0.0	COMB
E	66871.9	9399.84	20710.00	607.84	46145.10	3296.90	0.0	1291.	
D	58149.5	12260.66	21311.98	829.98	48363.28	4780.18	0.0	1291.	
D	0.0				0.00	0.00	0.0	0.0	COMB
F	58149.5	8173.78	18008.70	528.56	40126.18	2866.87	0.0	1291.	

Additional Design Data

M	periphery-O/-I [m2/m] [m2/m]	deff [mm]	t-min [mm]	t-max [mm]	SMP [o/o]	thet-p [tm2/m]	thet-y [tm2/m]	thet-z [tm2/m]	thet-yz [tm2/m]
	8.114	49.2	45.0	52.0	0.0	1.373	1.342	0.031	

Cross section No. 263.3 = CS 20 - in-situ conc:C2

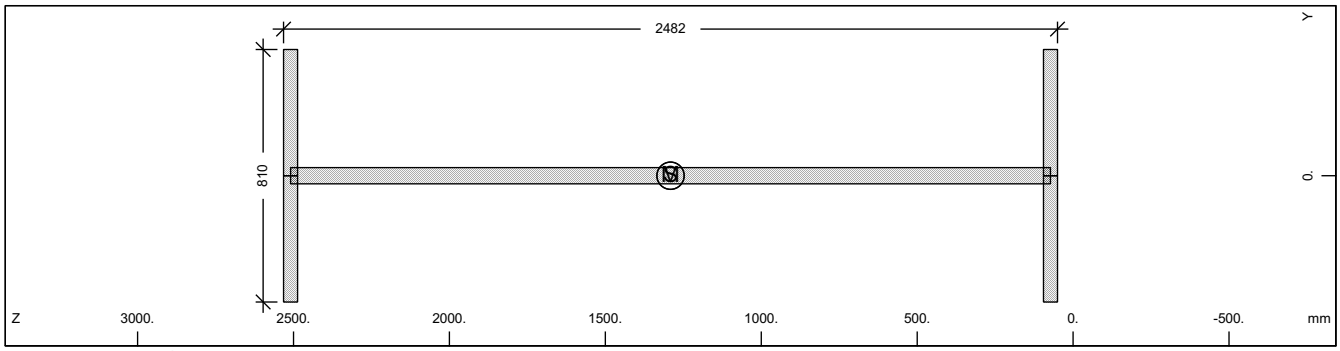

Cross section No. 263

Static properties of cross section

Mat NoR	A[cm2] It[cm4]	Ay/Az/Ayz [cm2]	Iy/Iz/Iyz [cm4]	ys/zs [mm]	modules [N/mm2]	gam [kN/m]
1	1996.18	607.50	17093516.	0.0	210000	15.67
	6270.0	1203.88	398580.9	1290.9	80769	

Additional static properties of cross section

Alfa-T [1/°K]	ymin ymax [mm]	zmin zmax [mm]	hymin hzmin [mm]	AK AB [cm2]	MB	Tau-T Tau-B [1/m3]	Tau-Vy Tau-Vz [1/m2]
1.2E-05	-405.0	-1240.9		1.209E+03		3.182E+02	2.058E+01
	405.0	1240.9				1.255E+02	9.339E+00

Section values for warping

Wmin[cm2]	Wmax[cm2]	CM[cm6]	CMS[cm4]	ASwyy[cm6]	ASwzz[cm6]	ry[mm]	rz[mm]
-4934.68	4934.685917311670.		9018915.9	5.76	246.93	0.0	0.0

Design values of cross section

Mat NoR	A[cm2] It[cm4]	Ay/Az/Ayz [cm2]	Iy/Iz/Iyz [cm4]	ys/zs [mm]	modules [N/mm2]	gam [kN/m]
1	1996.18	607.50	17093516.	0.0	182609	15.67
	6270.0	1203.88	398580.9	1290.9	70234	

Design forces and moments
(C/E = characteristic plastic/elastic, D=plast.Design, F=elast. Design)

	N[kN]	Vy[kN]	Vz[kN]	Mt[kNm]	My[kNm]	Mz[kNm]	y[mm]	z[mm]	BUCK
C	66871.9	14099.76	24508.77	954.47	55617.77	5497.21	0.0	1291.	c c
C	0.0				0.00	0.00	0.0	0.0	COMB
E	66871.9	9399.84	20710.00	607.84	46145.10	3296.90	0.0	1291.	

SOFiSTiK AG - www.sofistik.de

Composite bridge 38+50+38, b=14.25m, 2x2HL1100R HISTAR460 , slab 0.30m C30/37

Design forces and moments
(C/E = characteristic plastic/elastic, D=plast.Design, F=elast. Design)

	N[kN]	Vy[kN]	Vz[kN]	Mt[kNm]	My[kNm]	Mz[kNm]	y[mm]	z[mm]	BUCK
D	58149.5	12260.66	21311.98	829.98	48363.28	4780.18	0.0	1291.	
D	0.0				0.00	0.00	0.0	0.0	COMB
F	58149.5	8173.78	18008.70	528.56	40126.18	2866.87	0.0	1291.	

Additional Design Data

M	periphery-O/-I [m2/m]	[m2/m]	deff [mm]	t-min [mm]	t-max [mm]	SMP [o/o]	thet-p [tm2/m]	thet-y [tm2/m]	thet-z [tm2/m]	thet-yz [tm2/m]
	8.114		49.2	45.0	52.0	0.0	1.373	1.342	0.031	

Cross section No. 263.4 = CS 21 - reinf active:C2

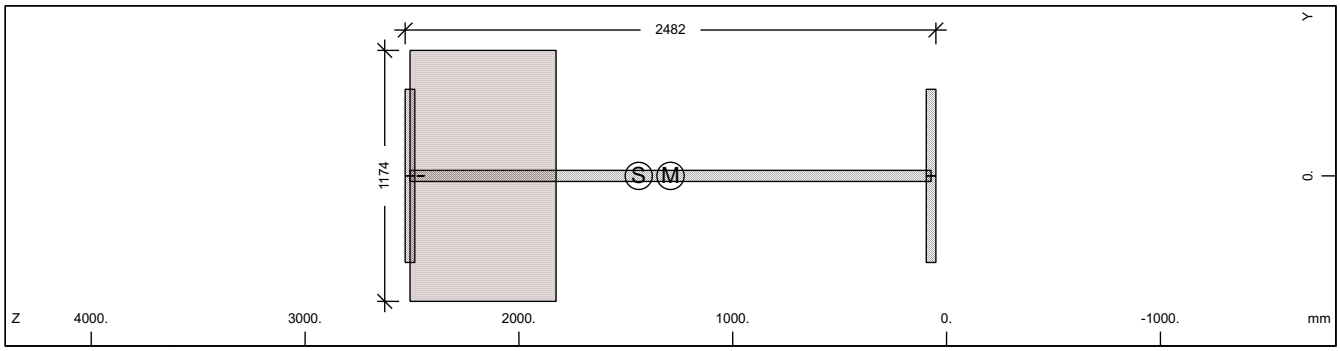

Cross section No. 263

Static properties of cross section

Mat NoR	A[cm2] It[cm4]	Ay/Az/Ayz [cm2]	Iy/Iz/Iyz [cm4]	ys/zs [mm]	modules [N/mm2]	gam [kN/m]
1	2404.00	607.50	19859457.	0.0	210000	35.71
	6270.0	1112.10	398580.9	1439.8	80769	

Additional static properties of cross section

Alfa-T [1/°K]	ymin ymax [mm]	zmin zmax [mm]	hymin hzmin [mm]	AK AB [cm2]	MB	Tau-T Tau-B [1/m3]	Tau-Vy Tau-Vz [1/m2]
1.2E-05	-587.0	-1389.8		5.388E+03		3.162E+00	2.058E+01
	587.0	1092.1		8.017E+03		1.255E+02	9.533E+00

Section values for warping

Wmin[cm2]	Wmax[cm2]	CM[cm6]	CMS[cm4]	ASwyy[cm6]	ASwzz[cm6]	ry[mm]	rz[mm]
-4934.68	4934.685917310738.		9018914.5	-2.71	-135.09	0.0	3.9

Partial cross sections

Mat NoR	A[cm2] It[cm4]	Ay/Az/Ayz [cm2]	Iy/Iz/Iyz [cm4]	ys/zs [mm]	modules [N/mm2]	gam [kN/m]
1	1996.18	607.50	17093516.	0.0	210000	15.67
	16342.2	1104.45	398580.9	1290.9	80769	
25	8017.00		3115433.8	0.0	10667	20.04
	36832139.	139.03	0.0	2167.9	4444	
210	0.64	0.00	0.0	0.0	200000	0.00
	2.2	0.00	0.0	2459.4	76923	

Design values of cross section

Mat NoR	A[cm2] It[cm4]	Ay/Az/Ayz [cm2]	Iy/Iz/Iyz [cm4]	ys/zs [mm]	modules [N/mm2]	gam [kN/m]
1	2308.99	607.50	19298028.	0.0	182609	35.71
	6270.0	1110.32	398580.9	1409.8	70234	

Design forces and moments
(C/E = characteristic plastic/elastic, D=plast.Design, F=elast. Design)

	N[kN]	Vy[kN]	Vz[kN]	Mt[kNm]	My[kNm]	Mz[kNm]	y[mm]	z[mm]	BUCK
C	66904.1	14118.33	38198.70	8727.03	55655.33	9153.40	7.0	1292.	c c
C	-5153.9				56036.53	0.00	0.0	1440.	COMB

SOFiSTiK AG - www.sofistik.de

Composite bridge 38+50+38, b=14.25m, 2x2HL1100R HISTAR460 , slab 0.30m C30/37

Design forces and moments
(C/E = characteristic plastic/elastic, D=plast.Design, F=elast. Design)

	N[kN]	Vy[kN]	Vz[kN]	Mt[kNm]	My[kNm]	Mz[kNm]	y[mm]	z[mm]	BUCK
C	-12025.5				0.00	9026.95	0.0	0.0	COMB
C	-90955.1	14118.33	38198.70	8727.03	-61036.3	-8984.80	-7.0	1817.	
C	-18897.1				-73549.2	0.00	0.0	1440.	COMB
C	-12025.5				0.00	-9026.95	0.0	0.0	COMB
E	80534.1	9399.84	20289.15	5218.32	47869.89	3296.90	0.0	1440.	
E	-80534.1	9399.84	20289.15	5218.32	-47869.9	-3296.90	0.0	1440.	
D	58177.5	12276.81	30532.31	6013.24	48395.93	7198.21	5.4	1292.	
D	-4481.6				48727.42	0.00	0.0	1440.	COMB
D	-8017.0				0.00	7133.40	0.0	0.0	COMB
D	-74211.5	12276.81	30532.31	6013.24	-51712.8	-7111.79	-5.4	1746.	
D	-11552.4				-60402.5	0.00	0.0	1440.	COMB
D	-8017.0				0.00	-7133.40	0.0	0.0	COMB
F	70029.6	8173.78	17642.74	3478.88	41625.99	2866.87	0.0	1440.	
F	-70029.6	8173.78	17642.74	3478.88	-41626.0	-2866.87	0.0	1440.	

Additional Design Data

M	periphery-O/-I [m2/m]	[m2/m]	deff [mm]	t-min [mm]	t-max [mm]	SMP [o/o]	thet-p [tm2/m]	thet-y [tm2/m]	thet-z [tm2/m]	thet-yz [tm2/m]
	9.484		50.7	32.0	682.9	0.0	2.127	2.096	0.031	
1	8.114		49.2	45.0	52.0	0.0	1.373	1.342	0.031	
25	1.366		1174.0			0.0	0.078	0.078		
**	0.004		32.0			0.0	0.000		0.000	

Cross section No. 263.5 = CS 30 - in-situ conc:C3

Cross section No. 264 - VFT (253)

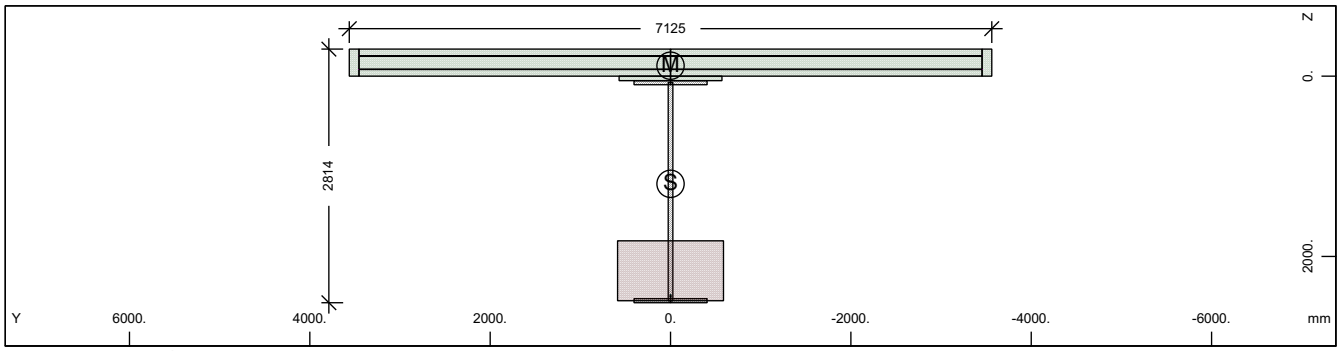

Cross section No. 264 - VFT (253)

Static properties of cross section

Mat NoR	A[cm2] It[cm4]	Ay/Az/Ayz [cm2]	Iy/Iz/Iyz [cm4]	ys/zs [mm]	y/z-sc [mm]	modules [N/mm2]	gam [kN/m]
1	2797.08	361.20	28282499.	0.0	0.0	210000	89.97
	6270.0	843.93	16846818.	1194.8	-116.1	80769	

Additional static properties of cross section

Alfa-T [1/°K]	ymin ymax [mm]	zmin zmax [mm]	hymin hzmin [mm]	AK AB [cm2]	MB	Tau-T Tau-B [1/m3]	Tau-Vy Tau-Vz [1/m2]
1.2E-05	-3562.5	-1494.8		5.246E+03		3.248E+00	3.375E+01
	3562.5	1318.9		2.975E+04		1.255E+02	1.652E+01

Section values for warping

Wmin[cm2]	Wmax[cm2]	CM[cm6]	CMS[cm4]	ASwyy[cm6]	ASwzz[cm6]	ry[mm]	rz[mm]
-10559.85	10559.85	1.473E+10	3493630.5	-391.45	-657.17	0.0	1778.7

SOFiSTiK AG - www.sofistik.de

Composite bridge 38+50+38, b=14.25m, 2x2HL1100R HISTAR460 , slab 0.30m C30/37

Partial cross sections

Mat NoR	A[cm2] It[cm4]	Ay/Az/Ayz [cm2]	Iy/Iz/Iyz [cm4]	ys/zs [mm]	modules [N/mm2]	gam [kN/m]
1	1986.75	0.12	16794109.	0.0	210000	15.60
	16257.3	571.81	398580.9	1281.9	80769	
25	7804.12		2873790.3	0.0	10667	19.51
	35854125.	68.04	0.0	2158.9	4444	
210	0.64	0.00	0.0	0.0	200000	0.00
	2.2	0.00	0.0	2441.2	76923	
31	21945.00	17981.08	170028.4	0.0	0	54.86
	6417251.4	12413.98	904880243.	-145.5	0	
300	433.98	379.14	24411.4	0.0	200000	0.00
	14.3	281.26	17270646.	-150.0	76923	

Design values of cross section

Mat NoR	A[cm2] It[cm4]	Ay/Az/Ayz [cm2]	Iy/Iz/Iyz [cm4]	ys/zs [mm]	modules [N/mm2]	gam [kN/m]
1	2704.58	361.20	27359432.	0.0	182609	89.97
	6270.0	842.55	16846818.	1161.9	70234	

Design forces and moments
(C/E = characteristic plastic/elastic, D=plast.Design, F=elast. Design)

	N[kN]	Vy[kN]	Vz[kN]	Mt[kNm]	My[kNm]	Mz[kNm]	y[mm]	z[mm]	BUCK
C	88287.2	62855.50	66465.53	107102.8	97431.44	103810.6	26.4	-73.9	c c
C	-84469.3				172604.2	0.00	0.0	1195.	COMB
C	-44623.7				0.00	103771.9	0.0	0.0	COMB
C	-164665.	62855.50	66465.53	107102.8	-106609.	-103193.	-26.0	1332.	
C	-4778.0				-106937.	0.00	0.0	1195.	COMB
C	-44623.7				0.00	-103772.	0.0	0.0	COMB
E	93702.0	8554.34	17474.29	5080.69	71836.63	25597.47	0.0	1195.	
E	-93702.0	8554.34	17474.29	5080.69	-71836.6	-25597.5	0.0	1195.	
D	76771.5	47310.15	49876.09	71613.62	83450.83	77916.81	20.0	-26.1	
D	-60093.8				132187.3	0.00	0.0	1195.	COMB
D	-29749.1				0.00	77902.09	0.0	0.0	COMB
D	-127690.	47310.15	49876.08	71613.61	-88403.3	-77604.9	-20.0	1175.	
D	595.5				-88409.2	0.00	0.0	1195.	COMB
D	-29749.1				0.00	-77902.1	0.0	0.0	COMB
F	81480.0	7438.56	15195.03	3387.12	62466.64	22258.68	0.0	1195.	
F	-81480.0	7438.56	15195.03	3387.12	-62466.6	-22258.7	0.0	1195.	

Additional Design Data

M	periphery-O/-I [m2/m]	[m2/m]	deff [mm]	t-min [mm]	t-max [mm]	SMP [o/o]	thet-p [tm2/m]	thet-y [tm2/m]	thet-z [tm2/m]	thet-yz [tm2/m]
	53.583		10.4	3.1	664.7	0.0	32.563	9.909	22.653	
1	8.077		49.2	45.0	52.0	0.0	1.350	1.318	0.031	
25	1.329		1174.0			0.0	0.072	0.072		
**	0.004		32.0			0.0	0.000		0.000	
31	16.530		265.5	50.0	300.0	0.0	22.626	0.004	22.622	
**	27.642		3.1	3.1	3.1	0.0	0.000	0.000	0.000	

SOFiSTiK AG - www.sofistik.de

Composite bridge 38+50+38, b=14.25m, 2x2HL1100R HISTAR460 , slab 0.30m C30/37

Cross section No. 264.1 = CS 1 - steel alone

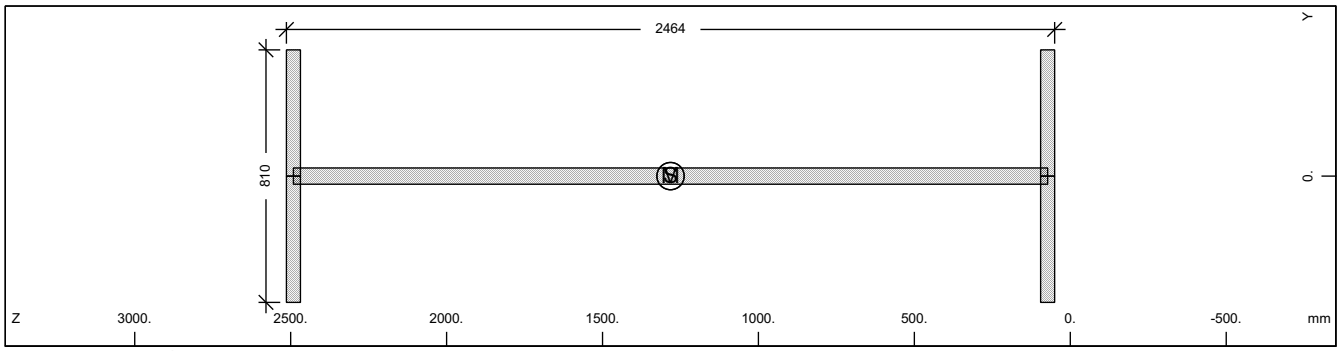

Cross section No. 264

Static properties of cross section

Mat NoR	A[cm2] It[cm4]	Ay/Az/Ayz [cm2]	Iy/Iz/Iyz [cm4]	ys/zs [mm]	modules [N/mm2]	gam [kN/m]
1	1986.75	607.50	16794109.	0.0	210000	15.60
	6270.0	1194.83	398580.9	1281.9	80769	

Additional static properties of cross section

Alfa-T [1/°K]	ymin ymax [mm]	zmin zmax [mm]	hymin hzmin [mm]	AK AB [cm2]	MB	Tau-T Tau-B [1/m3]	Tau-Vy Tau-Vz [1/m2]
1.2E-05	-405.0	-1231.9		1.202E+03		3.199E+02	2.058E+01
	405.0	1231.9				1.255E+02	9.402E+00

Section values for warping

Wmin[cm2]	Wmax[cm2]	CM[cm6]	CMS[cm4]	ASwyy[cm6]	ASwzz[cm6]	ry[mm]	rz[mm]
-4897.96	4897.965829578289.		8885196.7	-0.50	-21.21	0.0	0.0

Design values of cross section

Mat NoR	A[cm2] It[cm4]	Ay/Az/Ayz [cm2]	Iy/Iz/Iyz [cm4]	ys/zs [mm]	modules [N/mm2]	gam [kN/m]
1	1986.75	607.50	16794109.	0.0	182609	15.60
	6270.0	1194.83	398580.9	1281.9	70234	

Design forces and moments
(C/E = characteristic plastic/elastic, D=plast.Design, F=elast. Design)

	N[kN]	Vy[kN]	Vz[kN]	Mt[kNm]	My[kNm]	Mz[kNm]	y[mm]	z[mm]	BUCK
C	66556.1	14099.76	24326.40	949.73	55012.92	5493.10	0.0	1282.	c c
C	0.0				0.00	0.00	0.0	0.0	COMB
E	66556.1	9399.84	20570.95	604.68	45670.48	3296.90	0.0	1282.	
D	57874.8	12260.66	21153.39	825.85	47837.32	4776.61	0.0	1282.	
D	0.0				0.00	0.00	0.0	0.0	COMB
F	57874.8	8173.78	17887.78	525.81	39713.46	2866.87	0.0	1282.	

Additional Design Data

M	periphery-O/-I [m2/m] [m2/m]	deff [mm]	t-min [mm]	t-max [mm]	SMP [o/o]	thet-p [tm2/m]	thet-y [tm2/m]	thet-z [tm2/m]	thet-yz [tm2/m]
	8.077	49.2	45.0	52.0	0.0	1.350	1.318	0.031	

SOFiSTiK AG - www.sofistik.de

Composite bridge 38+50+38, b=14.25m, 2x2HL1100R HISTAR460 , slab 0.30m C30/37

Cross section No. 264.2 = CS 10 - prefab. slab C1

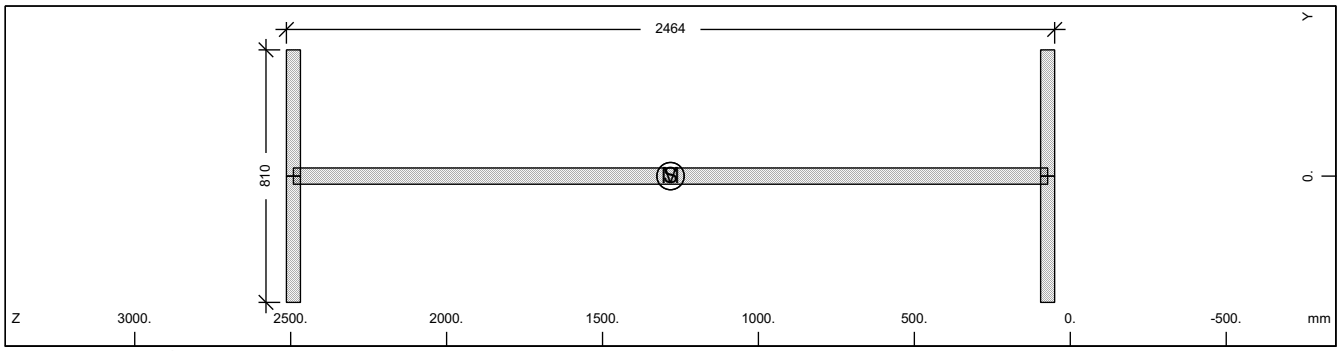

Cross section No. 264

Static properties of cross section

Mat NoR	A[cm2] It[cm4]	Ay/Az/Ayz [cm2]	Iy/Iz/Iyz [cm4]	ys/zs [mm]	modules [N/mm2]	gam [kN/m]
1	1986.75	607.50	16794109.	0.0	210000	15.60
	6270.0	1194.83	398580.9	1281.9	80769	

Additional static properties of cross section

Alfa-T [1/°K]	ymin ymax [mm]	zmin zmax [mm]	hymin hzmin [mm]	AK AB [cm2]	MB	Tau-T Tau-B [1/m3]	Tau-Vy Tau-Vz [1/m2]
1.2E-05	-405.0	-1231.9		1.202E+03		3.199E+02	2.058E+01
	405.0	1231.9				1.255E+02	9.402E+00

Section values for warping

Wmin[cm2]	Wmax[cm2]	CM[cm6]	CMS[cm4]	ASwyy[cm6]	ASwzz[cm6]	ry[mm]	rz[mm]
-4897.96	4897.965829578289.		8885196.7	-0.50	-21.21	0.0	0.0

Design values of cross section

Mat NoR	A[cm2] It[cm4]	Ay/Az/Ayz [cm2]	Iy/Iz/Iyz [cm4]	ys/zs [mm]	modules [N/mm2]	gam [kN/m]
1	1986.75	607.50	16794109.	0.0	182609	15.60
	6270.0	1194.83	398580.9	1281.9	70234	

Design forces and moments
(C/E = characteristic plastic/elastic, D=plast.Design, F=elast. Design)

	N[kN]	Vy[kN]	Vz[kN]	Mt[kNm]	My[kNm]	Mz[kNm]	y[mm]	z[mm]	BUCK
C	66556.1	14099.76	24326.40	949.73	55012.92	5493.10	0.0	1282.	c c
C	0.0				0.00	0.00	0.0	0.0	COMB
E	66556.1	9399.84	20570.95	604.68	45670.48	3296.90	0.0	1282.	
D	57874.8	12260.66	21153.39	825.85	47837.32	4776.61	0.0	1282.	
D	0.0				0.00	0.00	0.0	0.0	COMB
F	57874.8	8173.78	17887.78	525.81	39713.46	2866.87	0.0	1282.	

Additional Design Data

M	periphery-O/-I [m2/m] [m2/m]	deff [mm]	t-min [mm]	t-max [mm]	SMP [o/o]	thet-p [tm2/m]	thet-y [tm2/m]	thet-z [tm2/m]	thet-yz [tm2/m]
	8.077	49.2	45.0	52.0	0.0	1.350	1.318	0.031	

SOFiSTiK AG - www.sofistik.de

Composite bridge 38+50+38, b=14.25m, 2x2HL1100R HISTAR460 , slab 0.30m C30/37

Cross section No. 264.3 = CS 20 - in-situ conc:C2

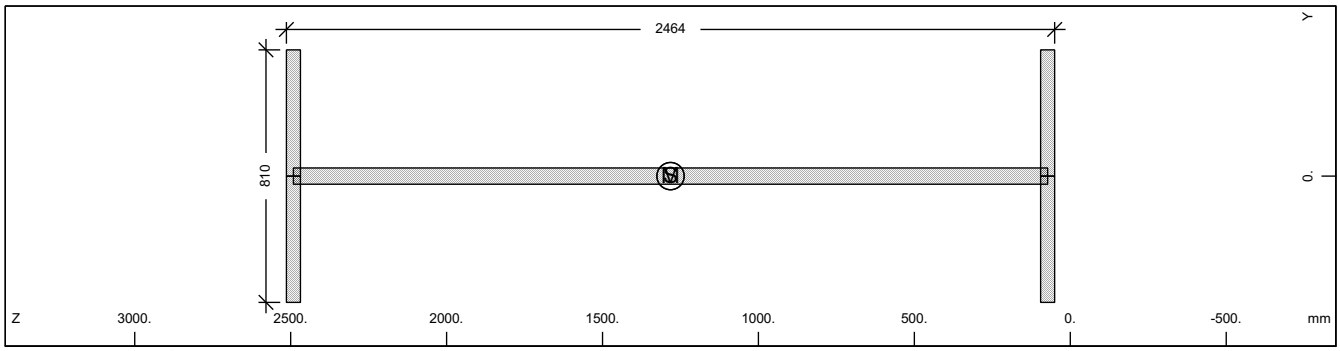

Cross section No. 264

Static properties of cross section

Mat NoR	A[cm2] It[cm4]	Ay/Az/Ayz [cm2]	Iy/Iz/Iyz [cm4]	ys/zs [mm]	modules [N/mm2]	gam [kN/m]
1	1986.75	607.50	16794109.	0.0	210000	15.60
	6270.0	1194.83	398580.9	1281.9	80769	

Additional static properties of cross section

Alfa-T [1/°K]	ymin ymax [mm]	zmin zmax [mm]	hymin hzmin [mm]	AK AB [cm2]	MB	Tau-T Tau-B [1/m3]	Tau-Vy Tau-Vz [1/m2]
1.2E-05	-405.0	-1231.9		1.202E+03		3.199E+02	2.058E+01
	405.0	1231.9				1.255E+02	9.402E+00

Section values for warping

Wmin[cm2]	Wmax[cm2]	CM[cm6]	CMS[cm4]	ASwyy[cm6]	ASwzz[cm6]	ry[mm]	rz[mm]
-4897.96	4897.965829578289.		8885196.7	-0.50	-21.21	0.0	0.0

Design values of cross section

Mat NoR	A[cm2] It[cm4]	Ay/Az/Ayz [cm2]	Iy/Iz/Iyz [cm4]	ys/zs [mm]	modules [N/mm2]	gam [kN/m]
1	1986.75	607.50	16794109.	0.0	182609	15.60
	6270.0	1194.83	398580.9	1281.9	70234	

Design forces and moments
(C/E = characteristic plastic/elastic, D=plast.Design, F=elast. Design)

	N[kN]	Vy[kN]	Vz[kN]	Mt[kNm]	My[kNm]	Mz[kNm]	y[mm]	z[mm]	BUCK
C	66556.1	14099.76	24326.40	949.73	55012.92	5493.10	0.0	1282.	c c
C	0.0				0.00	0.00	0.0	0.0	COMB
E	66556.1	9399.84	20570.95	604.68	45670.48	3296.90	0.0	1282.	
D	57874.8	12260.66	21153.39	825.85	47837.32	4776.61	0.0	1282.	
D	0.0				0.00	0.00	0.0	0.0	COMB
F	57874.8	8173.78	17887.78	525.81	39713.46	2866.87	0.0	1282.	

Additional Design Data

M	periphery-O/-I [m2/m] [m2/m]	deff [mm]	t-min [mm]	t-max [mm]	SMP [o/o]	thet-p [tm2/m]	thet-y [tm2/m]	thet-z [tm2/m]	thet-yz [tm2/m]
	8.077	49.2	45.0	52.0	0.0	1.350	1.318	0.031	

SOFiSTiK AG - www.sofistik.de

Composite bridge 38+50+38, b=14.25m, 2x2HL1100R HISTAR460 , slab 0.30m C30/37

Cross section No. 264.4 = CS 21 - reinf active:C2

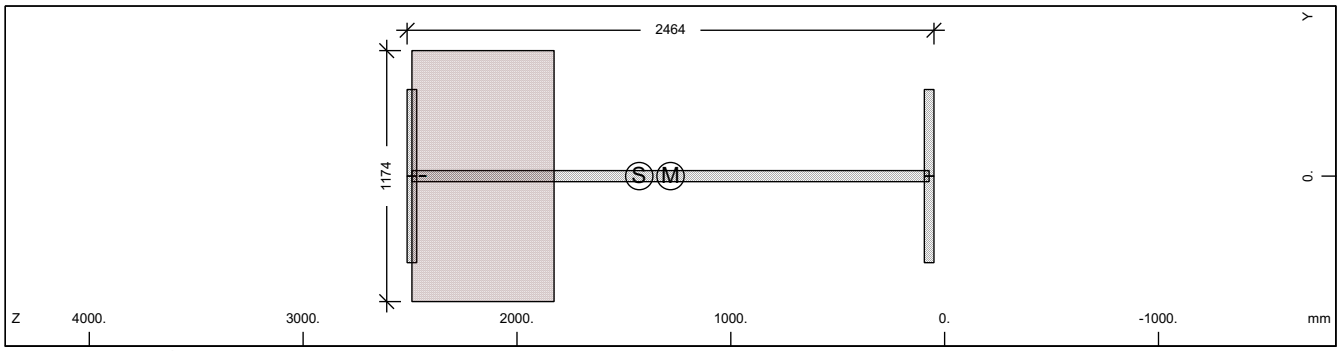

Cross section No. 264

Static properties of cross section

Mat NoR	A[cm2] It[cm4]	Ay/Az/Ayz [cm2]	Iy/Iz/Iyz [cm4]	ys/zs [mm]	modules [N/mm2]	gam [kN/m]
1	2383.76	607.50	19488070.	0.0	210000	35.11
	6270.0	1106.27	398580.9	1428.0	80769	

Additional static properties of cross section

Alfa-T [1/°K]	ymin ymax [mm]	zmin zmax [mm]	hymin hzmin [mm]	AK AB [cm2]	MB	Tau-T Tau-B [1/m3]	Tau-Vy Tau-Vz [1/m2]
1.2E-05	-587.0	-1378.0		5.246E+03		3.248E+00	2.058E+01
	587.0	1085.7		7.804E+03		1.255E+02	9.590E+00

Section values for warping

Wmin[cm2]	Wmax[cm2]	CM[cm6]	CMS[cm4]	ASwyy[cm6]	ASwzz[cm6]	ry[mm]	rz[mm]
-4897.96	4897.96	582928	9.8.	8885195.9	-1.06	-51.75	0.0	4.5

Partial cross sections

Mat NoR	A[cm2] It[cm4]	Ay/Az/Ayz [cm2]	Iy/Iz/Iyz [cm4]	ys/zs [mm]	modules [N/mm2]	gam [kN/m]
1	1986.75	607.50	16794109.	0.0	210000	15.60
	16257.3	1098.92	398580.9	1281.9	80769	
25	7804.12		2873790.3	0.0	10667	19.51
	35854125.	133.75	0.0	2158.9	4444	
210	0.64	0.00	0.0	0.0	200000	0.00
	2.2	0.00	0.0	2441.2	76923	

Design values of cross section

Mat NoR	A[cm2] It[cm4]	Ay/Az/Ayz [cm2]	Iy/Iz/Iyz [cm4]	ys/zs [mm]	modules [N/mm2]	gam [kN/m]
1	2291.27	607.50	18940002.	0.0	182609	35.11
	6270.0	1104.56	398580.9	1398.5	70234	

Design forces and moments
(C/E = characteristic plastic/elastic, D=plast.Design, F=elast. Design)

	N[kN]	Vy[kN]	Vz[kN]	Mt[kNm]	My[kNm]	Mz[kNm]	y[mm]	z[mm]	BUCK
C	66588.2	14118.33	37665.09	8516.10	55050.18	9049.84	6.9	1283.	c c
C	-5059.2				55417.52	0.00	0.0	1428.	COMB
C	-11706.2				0.00	8929.13	0.0	0.0	COMB
C	-90000.6	14118.33	37665.09	8516.10	-60582.6	-8888.89	-6.9	1815.	
C	-18353.2				-72528.8	0.00	0.0	1428.	COMB
C	-11706.2				0.00	-8929.13	0.0	0.0	COMB
E	79856.0	9399.84	20168.60	5080.65	47376.34	3296.90	0.0	1428.	
E	-79856.0	9399.84	20168.60	5080.65	-47376.3	-3296.90	0.0	1428.	
D	57902.8	12276.81	30139.57	5871.66	47869.72	7129.21	5.3	1283.	
D	-4399.3				48189.14	0.00	0.0	1428.	COMB
D	-7804.1				0.00	7067.35	0.0	0.0	COMB
D	-73511.0	12276.81	30139.57	5871.66	-51049.1	-7046.72	-5.3	1729.	
D	-11208.9				-59596.7	0.00	0.0	1428.	COMB
D	-7804.1				0.00	-7067.35	0.0	0.0	COMB

SOFiSTiK AG - www.sofistik.de

Composite bridge 38+50+38, b=14.25m, 2x2HL1100R HISTAR460 , slab 0.30m C30/37

Design forces and moments
(C/E = characteristic plastic/elastic, D=plast.Design, F=elast. Design)

	N[kN]	Vy[kN]	Vz[kN]	Mt[kNm]	My[kNm]	Mz[kNm]	y[mm]	z[mm]	BUCK
F	69440.0	8173.78	17537.91	3387.10	41196.82	2866.87	0.0	1428.	
F	-69440.0	8173.78	17537.91	3387.10	-41196.8	-2866.87	0.0	1428.	

Additional Design Data

M	periphery-O/-I [m2/m]	[m2/m]	deff [mm]	t-min [mm]	t-max [mm]	SMP [o/o]	thet-p [tm2/m]	thet-y [tm2/m]	thet-z [tm2/m]	thet-yz [tm2/m]
	9.411		50.7	32.0	664.7	0.0	2.088	2.057	0.031	
1	8.077		49.2	45.0	52.0	0.0	1.350	1.318	0.031	
25	1.329		1174.0			0.0	0.072	0.072		
**	0.004		32.0			0.0	0.000		0.000	

Cross section No. 264.5 = CS 30 - in-situ conc:C3

Cross section No. 265 - VFT (253)

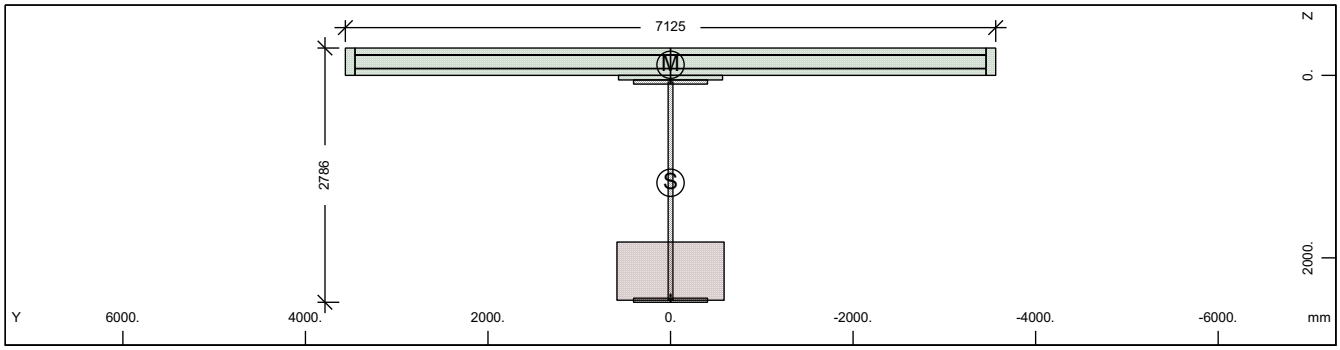

Cross section No. 265 - VFT (253)

Static properties of cross section

Mat NoR	A[cm2] It[cm4]	Ay/Az/Ayz [cm2]	Iy/Iz/Iyz [cm4]	ys/zs [mm]	y/z-sc [mm]	modules [N/mm2]	gam [kN/m]
1	2766.79	361.39	27519620.	0.0	0.0	210000	89.05
	6270.0	832.36	16876510.	1176.9	-116.5	80769	

Additional static properties of cross section

Alfa-T [1/°K]	ymin ymax [mm]	zmin zmax [mm]	hymin hzmin [mm]	AK AB [cm2]	MB	Tau-T Tau-B [1/m3]	Tau-Vy Tau-Vz [1/m2]
1.2E-05	-3562.5	-1476.9		5.031E+03		3.386E+00	3.373E+01
	3562.5	1309.4		2.943E+04		1.255E+02	1.677E+01

Section values for warping

Wmin[cm2]	Wmax[cm2]	CM[cm6]	CMS[cm4]	ASwyy[cm6]	ASwzz[cm6]	ry[mm]	rz[mm]
-10450.63	10450.63	1.445E+10	3374007.0	-101.48	-165.48	0.0	1741.8

Partial cross sections

Mat NoR	A[cm2] It[cm4]	Ay/Az/Ayz [cm2]	Iy/Iz/Iyz [cm4]	ys/zs [mm]	modules [N/mm2]	gam [kN/m]
1	1972.53	0.12	16348688.	0.0	210000	15.48
	16129.1	559.95	398580.9	1268.2	80769	
25	7483.04		2533477.2	0.0	10667	18.71
	34378991.	62.67	0.0	2145.2	4444	
210	0.64	0.00	0.0	0.0	200000	0.00
	2.2	0.00	0.0	2413.9	76923	
31	21945.00	17936.40	170028.4	0.0	0	54.86
	6417251.4	12417.67	904880243.	-145.5	0	
300	434.24	379.33	24426.1	0.0	200000	0.00
	14.3	281.88	17301820.	-150.0	76923	

SOFiSTiK AG - www.sofistik.de

Composite bridge 38+50+38, b=14.25m, 2x2HL1100R HISTAR460 , slab 0.30m C30/37

Design values of cross section

Mat NoR	A[cm2] It[cm4]	Ay/Az/Ayz [cm2]	Iy/Iz/Iyz [cm4]	ys/zs [mm]	modules [N/mm2]	gam [kN/m]
1	2678.11	361.39	26630598.	0.0	182609	89.05
	6270.0	831.05	16876508.	1144.9	70234	

Design forces and moments
(C/E = characteristic plastic/elastic, D=plast.Design, F=elast. Design)

	N[kN]	Vy[kN]	Vz[kN]	Mt[kNm]	My[kNm]	Mz[kNm]	y[mm]	z[mm]	BUCK
C	87823.8	62863.03	65660.68	106784.7	95881.97	103679.5	26.0	-74.0	c c
C	-84335.7				170162.0	0.00	0.0	1177.	COMB
C	-44142.1				0.00	103669.5	0.0	0.0	COMB
C	-163488.	62863.03	65660.68	106784.7	-104614.	-103096.	-26.0	1290.	
C	-3948.4				-104838.	0.00	0.0	1177.	COMB
C	-44142.1				0.00	-103669.	0.0	0.0	COMB
E	92687.6	8559.12	17209.49	4873.04	70404.17	25627.18	0.0	1177.	
E	-92687.6	8559.12	17209.49	4873.04	-70404.2	-25627.2	0.0	1177.	
D	76368.6	47316.70	49283.71	71400.09	82123.21	77846.79	20.0	-29.1	
D	-59977.6				130302.5	0.00	0.0	1177.	COMB
D	-29428.0				0.00	77841.69	0.0	0.0	COMB
D	-126811.	47316.70	49283.70	71400.08	-86732.4	-77547.6	-20.0	1140.	
D	1121.5				-86753.2	0.00	0.0	1177.	COMB
D	-29428.0				0.00	-77841.7	0.0	0.0	COMB
F	80597.9	7442.71	14964.78	3248.69	61221.02	22284.50	0.0	1177.	
F	-80597.9	7442.71	14964.78	3248.69	-61221.0	-22284.5	0.0	1177.	

Additional Design Data

M	periphery-O/-I [m2/m]	[m2/m]	deff [mm]	t-min [mm]	t-max [mm]	SMP [o/o]	thet-p [tm2/m]	thet-y [tm2/m]	thet-z [tm2/m]	thet-yz [tm2/m]
	53.490		10.3	3.1	637.4	0.0	32.208	9.555	22.653	
1	8.023		49.2	45.0	52.0	0.0	1.315	1.283	0.031	
25	1.275		1174.0			0.0	0.063	0.063		
**	0.004		32.0			0.0	0.000		0.000	
31	16.530		265.5	50.0	300.0	0.0	22.626	0.004	22.622	
**	27.659		3.1	3.1	3.1	0.0	0.000	0.000	0.000	

Cross section No. 265.1 = CS 1 - steel alone

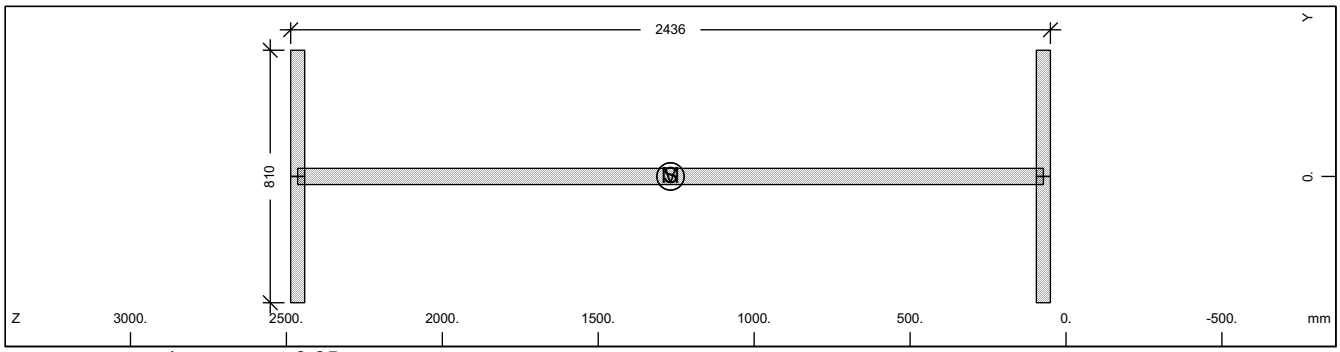

Cross section No. 265

Static properties of cross section

Mat NoR	A[cm2] It[cm4]	Ay/Az/Ayz [cm2]	Iy/Iz/Iyz [cm4]	ys/zs [mm]	modules [N/mm2]	gam [kN/m]
1	1972.53	607.50	16348688.	0.0	210000	15.48
	6270.0	1181.17	398580.9	1268.2	80769	

Additional static properties of cross section

Alfa-T [1/°K]	ymin ymax [mm]	zmin zmax [mm]	hymin hzmin [mm]	AK AB [cm2]	MB	Tau-T Tau-B [1/m3]	Tau-Vy Tau-Vz [1/m2]
1.2E-05	-405.0	-1218.2		1.193E+03		3.224E+02	2.058E+01
	405.0	1218.2				1.255E+02	9.499E+00

SOFiSTiK AG - www.sofistik.de

Composite bridge 38+50+38, b=14.25m, 2x2HL1100R HISTAR460 , slab 0.30m C30/37

Section values for warping

Wmin[cm2]	Wmax[cm2]	CM[cm6]	CMS[cm4]	ASwyy[cm6]	ASwzz[cm6]	ry[mm]	rz[mm]
-4842.58	4842.585698490445.	8685397.4		0.29	11.88	0.0	0.0

Design values of cross section

Mat NoR	A[cm2] It[cm4]	Ay/Az/Ayz [cm2]	Iy/Iz/Iyz [cm4]	ys/zs [mm]	modules [N/mm2]	gam [kN/m]
1	1972.53	607.50	16348688.	0.0	182609	15.48
	6270.0	1181.17	398580.9	1268.2	70234	

Design forces and moments
(C/E = characteristic plastic/elastic, D=plast.Design, F=elast. Design)

	N[kN]	Vy[kN]	Vz[kN]	Mt[kNm]	My[kNm]	Mz[kNm]	y[mm]	z[mm]	BUCK
C	66079.6	14099.76	24051.34	942.58	54106.04	5486.91	0.0	1268.	c c
C	0.0				0.00	0.00	0.0	0.0	COMB
E	66079.6	9399.84	20361.02	599.92	44958.27	3296.90	0.0	1268.	
D	57460.6	12260.66	20914.21	819.63	47048.73	4771.23	0.0	1268.	
D	0.0				0.00	0.00	0.0	0.0	COMB
F	57460.6	8173.78	17705.24	521.67	39094.15	2866.87	0.0	1268.	

Additional Design Data

M	periphery-O/-I [m2/m]	[m2/m]	deff [mm]	t-min [mm]	t-max [mm]	SMP [o/o]	thet-p [tm2/m]	thet-y [tm2/m]	thet-z [tm2/m]	thet-yz [tm2/m]
	8.023		49.2	45.0	52.0	0.0	1.315	1.283	0.031	

Cross section No. 265.2 = CS 10 - prefab. slab C1

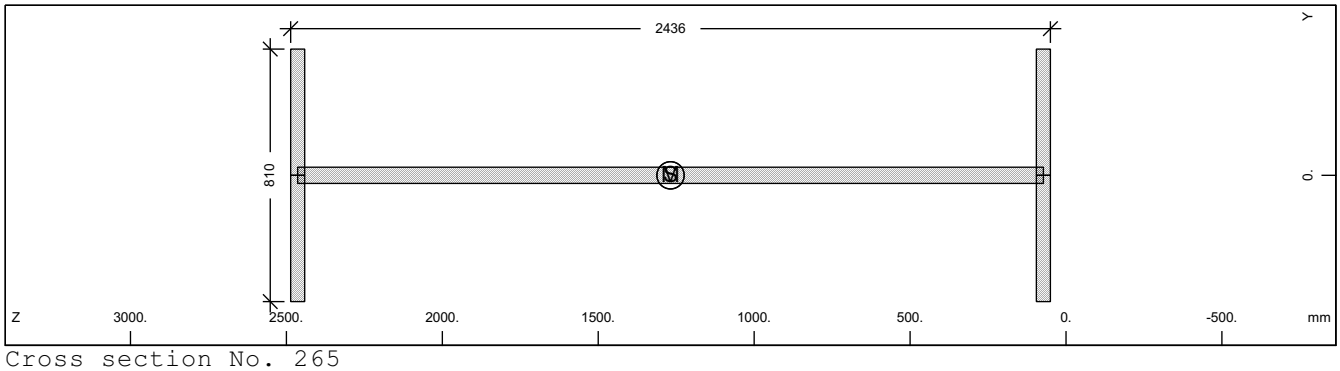

Cross section No. 265

Static properties of cross section

Mat NoR	A[cm2] It[cm4]	Ay/Az/Ayz [cm2]	Iy/Iz/Iyz [cm4]	ys/zs [mm]	modules [N/mm2]	gam [kN/m]
1	1972.53	607.50	16348688.	0.0	210000	15.48
	6270.0	1181.17	398580.9	1268.2	80769	

Additional static properties of cross section

Alfa-T [1/°K]	ymin ymax [mm]	zmin zmax [mm]	hymin hzmin [mm]	AK AB [cm2]	MB	Tau-T Tau-B [1/m3]	Tau-Vy Tau-Vz [1/m2]
1.2E-05	-405.0	-1218.2		1.193E+03		3.224E+02	2.058E+01
	405.0	1218.2				1.255E+02	9.499E+00

Section values for warping

Wmin[cm2]	Wmax[cm2]	CM[cm6]	CMS[cm4]	ASwyy[cm6]	ASwzz[cm6]	ry[mm]	rz[mm]
-4842.58	4842.585698490445.	8685397.4		0.29	11.88	0.0	0.0

Design values of cross section

Mat NoR	A[cm2] It[cm4]	Ay/Az/Ayz [cm2]	Iy/Iz/Iyz [cm4]	ys/zs [mm]	modules [N/mm2]	gam [kN/m]
1	1972.53	607.50	16348688.	0.0	182609	15.48
	6270.0	1181.17	398580.9	1268.2	70234	

SOFiSTiK AG - www.sofistik.de

Composite bridge 38+50+38, b=14.25m, 2x2HL1100R HISTAR460 , slab 0.30m C30/37

Design forces and moments
(C/E = characteristic plastic/elastic, D=plast.Design, F=elast. Design)

	N[kN]	Vy[kN]	Vz[kN]	Mt[kNm]	My[kNm]	Mz[kNm]	y[mm]	z[mm]	BUCK
C	66079.6	14099.76	24051.34	942.58	54106.04	5486.91	0.0	1268.	c c
C	0.0				0.00	0.00	0.0	0.0	COMB
E	66079.6	9399.84	20361.02	599.92	44958.27	3296.90	0.0	1268.	
D	57460.6	12260.66	20914.21	819.63	47048.73	4771.23	0.0	1268.	
D	0.0				0.00	0.00	0.0	0.0	COMB
F	57460.6	8173.78	17705.24	521.67	39094.15	2866.87	0.0	1268.	

Additional Design Data

M	periphery-O/-I [m2/m]	[m2/m]	deff [mm]	t-min [mm]	t-max [mm]	SMP [o/o]	thet-p [tm2/m]	thet-y [tm2/m]	thet-z [tm2/m]	thet-yz [tm2/m]
	8.023		49.2	45.0	52.0	0.0	1.315	1.283	0.031	

Cross section No. 265.3 = CS 20 - in-situ conc:C2

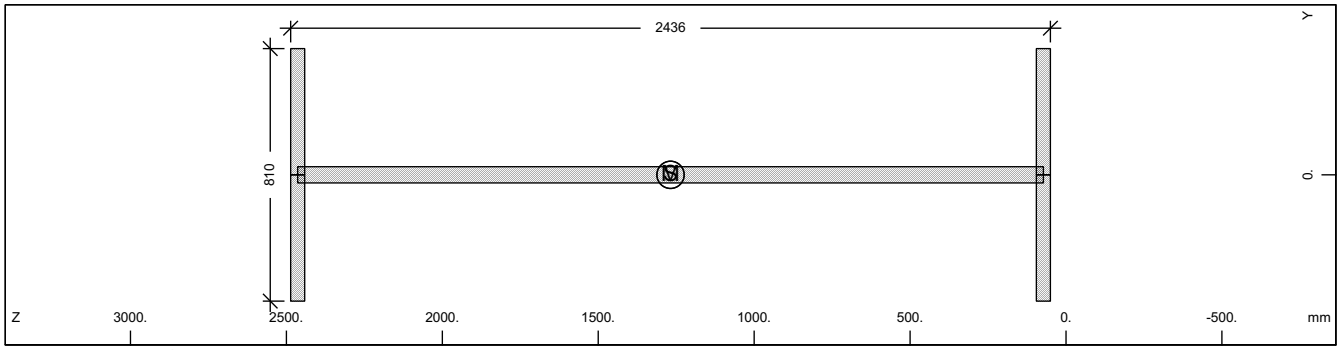

Cross section No. 265

Static properties of cross section

Mat NoR	A[cm2] It[cm4]	Ay/Az/Ayz [cm2]	Iy/Iz/Iyz [cm4]	ys/zs [mm]	modules [N/mm2]	gam [kN/m]
1	1972.53	607.50	16348688.	0.0	210000	15.48
	6270.0	1181.17	398580.9	1268.2	80769	

Additional static properties of cross section

Alfa-T [1/°K]	ymin ymax [mm]	zmin zmax [mm]	hymin hzmin [mm]	AK AB [cm2]	MB	Tau-T Tau-B [1/m3]	Tau-Vy Tau-Vz [1/m2]
1.2E-05	-405.0	-1218.2		1.193E+03		3.224E+02	2.058E+01
	405.0	1218.2				1.255E+02	9.499E+00

Section values for warping

Wmin[cm2]	Wmax[cm2]	CM[cm6]	CMS[cm4]	ASwyy[cm6]	ASwzz[cm6]	ry[mm]	rz[mm]
-4842.58	4842.585698490445.		8685397.4	0.29	11.88	0.0	0.0

Design values of cross section

Mat NoR	A[cm2] It[cm4]	Ay/Az/Ayz [cm2]	Iy/Iz/Iyz [cm4]	ys/zs [mm]	modules [N/mm2]	gam [kN/m]
1	1972.53	607.50	16348688.	0.0	182609	15.48
	6270.0	1181.17	398580.9	1268.2	70234	

Design forces and moments
(C/E = characteristic plastic/elastic, D=plast.Design, F=elast. Design)

	N[kN]	Vy[kN]	Vz[kN]	Mt[kNm]	My[kNm]	Mz[kNm]	y[mm]	z[mm]	BUCK
C	66079.6	14099.76	24051.34	942.58	54106.04	5486.91	0.0	1268.	c c
C	0.0				0.00	0.00	0.0	0.0	COMB
E	66079.6	9399.84	20361.02	599.92	44958.27	3296.90	0.0	1268.	
D	57460.6	12260.66	20914.21	819.63	47048.73	4771.23	0.0	1268.	
D	0.0				0.00	0.00	0.0	0.0	COMB
F	57460.6	8173.78	17705.24	521.67	39094.15	2866.87	0.0	1268.	

SOFiSTiK AG - www.sofistik.de

Composite bridge 38+50+38, b=14.25m, 2x2HL1100R HISTAR460 , slab 0.30m C30/37

Additional Design Data

M	periphery-O/-I [m2/m]	[m2/m]	deff [mm]	t-min [mm]	t-max [mm]	SMP [o/o]	thet-p [tm2/m]	thet-y [tm2/m]	thet-z [tm2/m]	thet-yz [tm2/m]
	8.023		49.2	45.0	52.0	0.0	1.315	1.283	0.031	

Cross section No. 265.4 = CS 21 - reinf active:C2

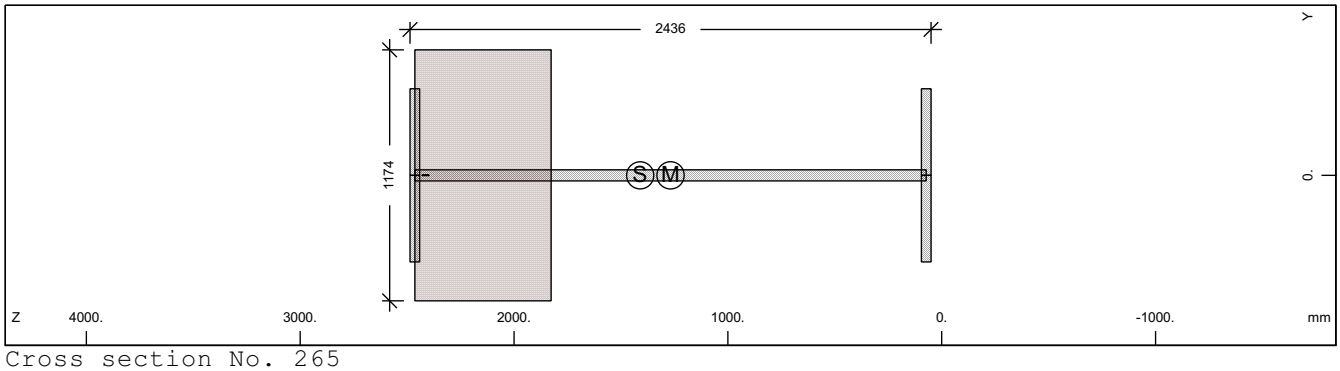

Cross section No. 265

Static properties of cross section

Mat NoR	A[cm2] It[cm4]	Ay/Az/Ayz [cm2]	Iy/Iz/Iyz [cm4]	ys/zs [mm]	modules [N/mm2]	gam [kN/m]
1	2353.23	607.50	18934630.	0.0	210000	34.19
	6270.0	1097.52	398580.9	1410.1	80769	

Additional static properties of cross section

Alfa-T [1/°K]	ymin ymax [mm]	zmin zmax [mm]	hymin hzmin [mm]	AK AB [cm2]	MB	Tau-T Tau-B [1/m3]	Tau-Vy Tau-Vz [1/m2]
1.2E-05	-587.0	-1360.1		5.031E+03		3.386E+00	2.058E+01
	587.0	1076.2		7.483E+03		1.255E+02	9.677E+00

Section values for warping

Wmin[cm2]	Wmax[cm2]	CM[cm6]	CMS[cm4]	ASwyy[cm6]	ASwzz[cm6]	ry[mm]	rz[mm]
-4842.58	4842.585698490445.		8685397.4	-2.63	-124.81	0.0	5.3

Partial cross sections

Mat NoR	A[cm2] It[cm4]	Ay/Az/Ayz [cm2]	Iy/Iz/Iyz [cm4]	ys/zs [mm]	modules [N/mm2]	gam [kN/m]
1	1972.53	607.50	16348688.	0.0	210000	15.48
	16129.1	1090.61	398580.9	1268.2	80769	
25	7483.04		2533477.2	0.0	10667	18.71
	34378991.	125.71	0.0	2145.2	4444	
210	0.64	0.00	0.0	0.0	200000	0.00
	2.2	0.00	0.0	2413.9	76923	

Design values of cross section

Mat NoR	A[cm2] It[cm4]	Ay/Az/Ayz [cm2]	Iy/Iz/Iyz [cm4]	ys/zs [mm]	modules [N/mm2]	gam [kN/m]
1	2264.54	607.50	18406658.	0.0	182609	34.19
	6270.0	1095.91	398580.9	1381.4	70234	

Design forces and moments
(C/E = characteristic plastic/elastic, D=plast.Design, F=elast. Design)

	N[kN]	Vy[kN]	Vz[kN]	Mt[kNm]	My[kNm]	Mz[kNm]	y[mm]	z[mm]	BUCK
C	66111.8	14118.33	36860.23	8197.97	54142.87	8893.82	6.7	1269.	c c
C	-4913.4				54489.33	0.00	0.0	1410.	COMB
C	-11224.6				0.00	8781.58	0.0	0.0	COMB
C	-88560.9	14118.33	36860.23	8197.97	-59327.8	-8744.16	-6.7	1788.	
C	-17535.7				-70990.5	0.00	0.0	1410.	COMB
C	-11224.6				0.00	-8781.58	0.0	0.0	COMB
E	78833.2	9399.84	19986.93	4873.00	46635.34	3296.90	0.0	1410.	
E	-78833.2	9399.84	19986.93	4873.00	-46635.3	-3296.90	0.0	1410.	
D	57488.5	12276.81	29547.19	5658.12	47080.75	7025.25	5.1	1269.	

SOFiSTiK AG - www.sofistik.de

Composite bridge 38+50+38, b=14.25m, 2x2HL1100R HISTAR460 , slab 0.30m C30/37

Design forces and moments
(C/E = characteristic plastic/elastic, D=plast.Design, F=elast. Design)

	N[kN]	Vy[kN]	Vz[kN]	Mt[kNm]	My[kNm]	Mz[kNm]	y[mm]	z[mm]	BUCK
D	-4272.5				47382.02	0.00	0.0	1410.	COMB
D	-7483.0				0.00	6967.72	0.0	0.0	COMB
D	-72454.6	12276.81	29547.19	5658.12	-50056.3	-6948.55	-5.1	1702.	
D	-10693.6				-58382.8	0.00	0.0	1410.	COMB
D	-7483.0				0.00	-6967.72	0.0	0.0	COMB
F	68550.6	8173.78	17379.94	3248.67	40552.47	2866.87	0.0	1410.	
F	-68550.6	8173.78	17379.94	3248.67	-40552.5	-2866.87	0.0	1410.	

Additional Design Data

M	periphery-O/-I [m2/m]	[m2/m]	deff [mm]	t-min [mm]	t-max [mm]	SMP [o/o]	thet-p [tm2/m]	thet-y [tm2/m]	thet-z [tm2/m]	thet-yz [tm2/m]
	9.302		50.6	32.0	637.4	0.0	2.030	1.998	0.031	
1	8.023		49.2	45.0	52.0	0.0	1.315	1.283	0.031	
25	1.275		1174.0			0.0	0.063	0.063		
**	0.004		32.0			0.0	0.000		0.000	

Cross section No. 265.5 = CS 30 - in-situ conc:C3

Cross section No. 266 - VFT (253)

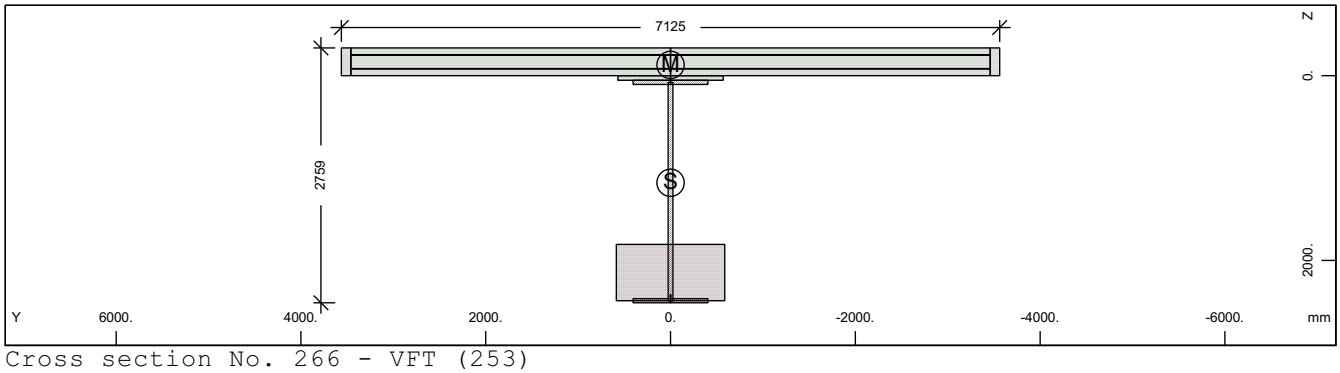

Cross section No. 266 - VFT (253)

Static properties of cross section

Mat NoR	A[cm2] It[cm4]	Ay/Az/Ayz [cm2]	Iy/Iz/Iyz [cm4]	ys/zs [mm]	y/z-sc [mm]	modules [N/mm2]	gam [kN/m]
1	2736.51	361.58	26765916.	0.0	0.0	210000	88.14
	6270.0	820.74	16906241.	1159.0	-116.9	80769	

Additional static properties of cross section

Alfa-T [1/°K]	ymin ymax [mm]	zmin zmax [mm]	hymin hzmin [mm]	AK AB [cm2]	MB	Tau-T Tau-B [1/m3]	Tau-Vy Tau-Vz [1/m2]
1.2E-05	-3562.5	-1459.0		4.817E+03		3.537E+00	3.371E+01
	3562.5	1300.1		2.911E+04		1.255E+02	1.704E+01

Section values for warping

Wmin[cm2]	Wmax[cm2]	CM[cm6]	CMS[cm4]	ASwyy[cm6]	ASwzz[cm6]	ry[mm]	rz[mm]
-10341.41	10341.41	1.417E+10	3257196.0	-13.75	-21.76	0.0	1704.5

Partial cross sections

Mat NoR	A[cm2] It[cm4]	Ay/Az/Ayz [cm2]	Iy/Iz/Iyz [cm4]	ys/zs [mm]	modules [N/mm2]	gam [kN/m]
1	1958.31	0.12	15910652.	0.0	210000	15.37
	16000.9	548.07	398580.9	1254.5	80769	
25	7161.96		2221155.7	0.0	10667	17.90
	32903880.	57.43	0.0	2131.5	4444	
210	0.64	0.00	0.0	0.0	200000	0.00
	2.2	0.00	0.0	2386.5	76923	
31	21945.00	17891.85	170028.4	0.0	0	54.86
	6417251.4	12419.37	904880243.	-145.5	0	

SOFiSTiK AG - www.sofistik.de

Composite bridge 38+50+38, b=14.25m, 2x2HL1100R HISTAR460 , slab 0.30m C30/37

300	434.50	379.53	24440.7	0.0	200000	0.00
	14.3	282.45	17333038.	-150.0	76923	

Design values of cross section

Mat	A[cm2]	Ay/Az/Ayz	Iy/Iz/Iyz	ys/zs	modules	gam
NoR	It[cm4]	[cm2]	[cm4]	[mm]	[N/mm2]	[kN/m]
1	2651.63	361.58	25911024.	0.0	182609	88.14
	6270.0	819.49	16906239.	1127.8	70234	

Design forces and moments
(C/E = characteristic plastic/elastic, D=plast.Design, F=elast. Design)

	N[kN]	Vy[kN]	Vz[kN]	Mt[kNm]	My[kNm]	Mz[kNm]	y[mm]	z[mm]	BUCK
C	87360.5	62870.57	64855.84	106466.6	94724.39	103543.5	25.2	-75.0	c c
C	-84198.9				167718.7	0.00	0.0	1159.	COMB
C	-43660.4				0.00	103567.1	0.0	0.0	COMB
C	-162311.	62870.57	64855.84	106466.5	-102598.	-103000.	-25.2	1249.	
C	-3122.0				-102738.	0.00	0.0	1159.	COMB
C	-43660.4				0.00	-103567.	0.0	0.0	COMB
E	91673.1	8563.90	16945.38	4665.39	68969.70	25656.90	0.0	1159.	
E	-91673.1	8563.90	16945.38	4665.39	-68969.7	-25656.9	0.0	1159.	
D	75965.6	47323.25	48691.34	71186.56	80805.68	77776.79	20.0	-32.1	
D	-59858.6				128418.1	0.00	0.0	1159.	COMB
D	-29107.0				0.00	77781.32	0.0	0.0	COMB
D	-125932.	47323.25	48691.33	71186.55	-85052.9	-77490.4	-20.0	1105.	
D	1644.7				-85097.5	0.00	0.0	1159.	COMB
D	-29107.0				0.00	-77781.3	0.0	0.0	COMB
F	79715.8	7446.87	14735.11	3110.26	59973.65	22310.35	0.0	1159.	
F	-79715.8	7446.87	14735.11	3110.26	-59973.7	-22310.4	0.0	1159.	

Additional Design Data

M	periphery-O/-I		deff	t-min	t-max	SMP	thet-p	thet-y	thet-z	thet-yz
	[m2/m]	[m2/m]	[mm]	[mm]	[mm]	[o/o]	[tm2/m]	[tm2/m]	[tm2/m]	[tm2/m]
	53.397		10.2	3.1	610.0	0.0	31.856	9.203	22.653	
1	7.968		49.2	45.0	52.0	0.0	1.280	1.249	0.031	
25	1.220		1174.0			0.0	0.056	0.056		
**	0.004		32.0			0.0	0.000		0.000	
31	16.530		265.5	50.0	300.0	0.0	22.626	0.004	22.622	
**	27.675		3.1	3.1	3.1	0.0	0.000	0.000	0.000	

Cross section No. 266.1 = CS 1 - steel alone

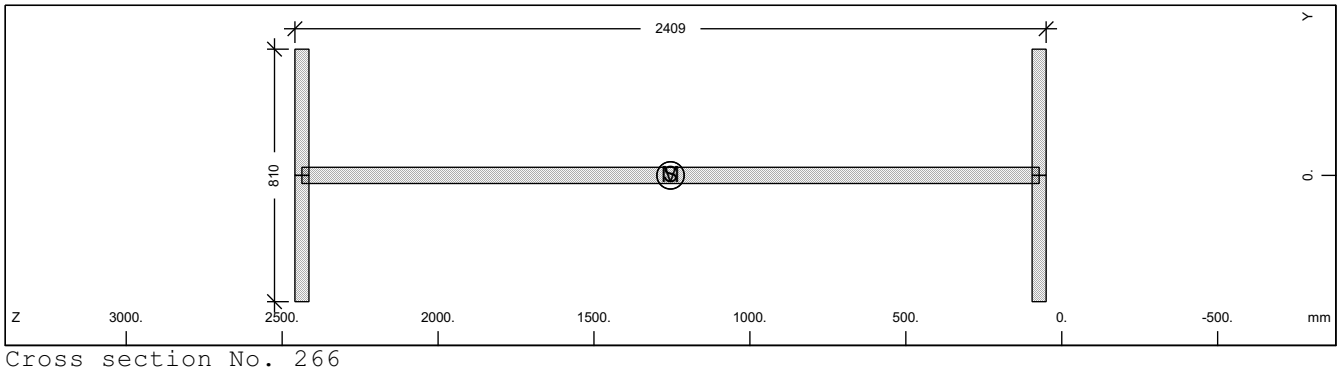

Cross section No. 266

Static properties of cross section

Mat	A[cm2]	Ay/Az/Ayz	Iy/Iz/Iyz	ys/zs	modules	gam
NoR	It[cm4]	[cm2]	[cm4]	[mm]	[N/mm2]	[kN/m]
1	1958.31	607.50	15910652.	0.0	210000	15.37
	6270.0	1167.50	398580.9	1254.5	80769	

SOFiSTiK AG - www.sofistik.de

Composite bridge 38+50+38, b=14.25m, 2x2HL1100R HISTAR460 , slab 0.30m C30/37

Additional static properties of cross section

Alfa-T	ymin ymax	zmin zmax	hymin hzmin	AK AB	MB	Tau-T Tau-B	Tau-Vy Tau-Vz
[1/°K]	[mm]	[mm]	[mm]	[cm2]		[1/m3]	[1/m2]
1.2E-05	-405.0	-1204.5		1.183E+03		3.250E+02	2.058E+01
	405.0	1204.5				1.255E+02	9.598E+00

Section values for warping

Wmin[cm2]	Wmax[cm2]	CM[cm6]	CMS[cm4]	ASwyy[cm6]	ASwzz[cm6]	ry[mm]	rz[mm]
-4787.20	4787.205568895046.		8487874.3	0.72	28.57	0.0	0.0

Design values of cross section

Mat NoR	A[cm2] It[cm4]	Ay/Az/Ayz [cm2]	Iy/Iz/Iyz [cm4]	ys/zs [mm]	modules [N/mm2]	gam [kN/m]
1	1958.31	607.50	15910652.	0.0	182609	15.37
	6270.0	1167.50	398580.9	1254.5	70234	

Design forces and moments
(C/E = characteristic plastic/elastic, D=plast.Design, F=elast. Design)

	N[kN]	Vy[kN]	Vz[kN]	Mt[kNm]	My[kNm]	Mz[kNm]	y[mm]	z[mm]	BUCK
C	65603.2	14099.76	23776.28	935.43	53205.69	5480.72	0.0	1255.	c c
C	0.0				0.00	0.00	0.0	0.0	COMB
E	65603.2	9399.84	20150.80	595.15	44250.41	3296.90	0.0	1255.	
D	57046.3	12260.66	20675.02	813.42	46265.82	4765.84	0.0	1255.	
D	0.0				0.00	0.00	0.0	0.0	COMB
F	57046.3	8173.78	17522.43	517.52	38478.62	2866.87	0.0	1255.	

Additional Design Data

M	periphery-O/-I [m2/m]	[m2/m]	deff [mm]	t-min [mm]	t-max [mm]	SMP [o/o]	thet-p [tm2/m]	thet-y [tm2/m]	thet-z [tm2/m]	thet-yz [tm2/m]
	7.968		49.2	45.0	52.0	0.0	1.280	1.249	0.031	

Cross section No. 266.2 = CS 10 - prefab. slab C1

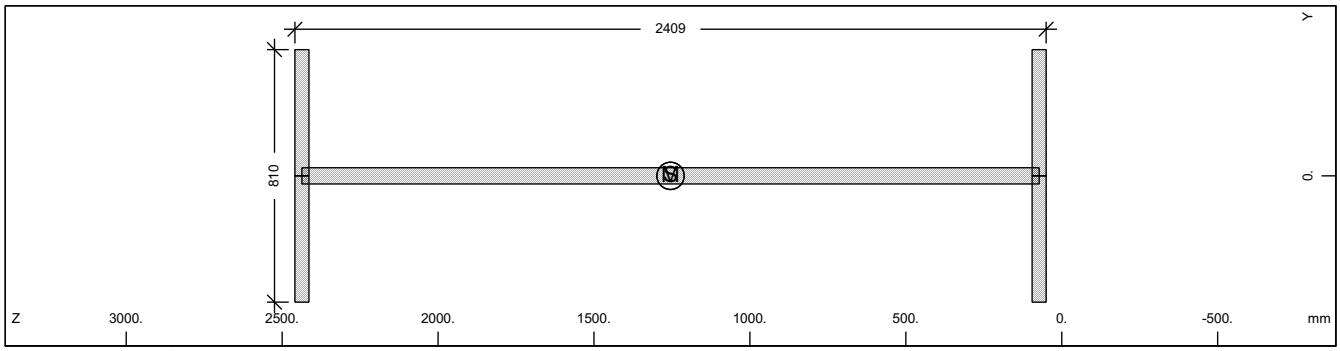

Cross section No. 266

Static properties of cross section

Mat NoR	A[cm2] It[cm4]	Ay/Az/Ayz [cm2]	Iy/Iz/Iyz [cm4]	ys/zs [mm]	modules [N/mm2]	gam [kN/m]
1	1958.31	607.50	15910652.	0.0	210000	15.37
	6270.0	1167.50	398580.9	1254.5	80769	

Additional static properties of cross section

Alfa-T	ymin ymax	zmin zmax	hymin hzmin	AK AB	MB	Tau-T Tau-B	Tau-Vy Tau-Vz
[1/°K]	[mm]	[mm]	[mm]	[cm2]		[1/m3]	[1/m2]
1.2E-05	-405.0	-1204.5		1.183E+03		3.250E+02	2.058E+01
	405.0	1204.5				1.255E+02	9.598E+00

Section values for warping

Wmin[cm2]	Wmax[cm2]	CM[cm6]	CMS[cm4]	ASwyy[cm6]	ASwzz[cm6]	ry[mm]	rz[mm]
-4787.20	4787.205568895046.		8487874.3	0.72	28.57	0.0	0.0

SOFiSTiK AG - www.sofistik.de

Composite bridge 38+50+38, b=14.25m, 2x2HL1100R HISTAR460 , slab 0.30m C30/37

Design values of cross section

Mat NoR	A[cm2] It[cm4]	Ay/Az/Ayz [cm2]	Iy/Iz/Iyz [cm4]	ys/zs [mm]	modules [N/mm2]	gam [kN/m]
1	1958.31	607.50	15910652.	0.0	182609	15.37
	6270.0	1167.50	398580.9	1254.5	70234	

Design forces and moments
(C/E = characteristic plastic/elastic, D=plast.Design, F=elast. Design)

	N[kN]	Vy[kN]	Vz[kN]	Mt[kNm]	My[kNm]	Mz[kNm]	y[mm]	z[mm]	BUCK
C	65603.2	14099.76	23776.28	935.43	53205.69	5480.72	0.0	1255.	c c
C	0.0				0.00	0.00	0.0	0.0	COMB
E	65603.2	9399.84	20150.80	595.15	44250.41	3296.90	0.0	1255.	
D	57046.3	12260.66	20675.02	813.42	46265.82	4765.84	0.0	1255.	
D	0.0				0.00	0.00	0.0	0.0	COMB
F	57046.3	8173.78	17522.43	517.52	38478.62	2866.87	0.0	1255.	

Additional Design Data

M	periphery-O/-I [m2/m] [m2/m]	deff [mm]	t-min [mm]	t-max [mm]	SMP [o/o]	thet-p [tm2/m]	thet-y [tm2/m]	thet-z [tm2/m]	thet-yz [tm2/m]
	7.968	49.2	45.0	52.0	0.0	1.280	1.249	0.031	

Cross section No. 266.3 = CS 20 - in-situ conc:C2

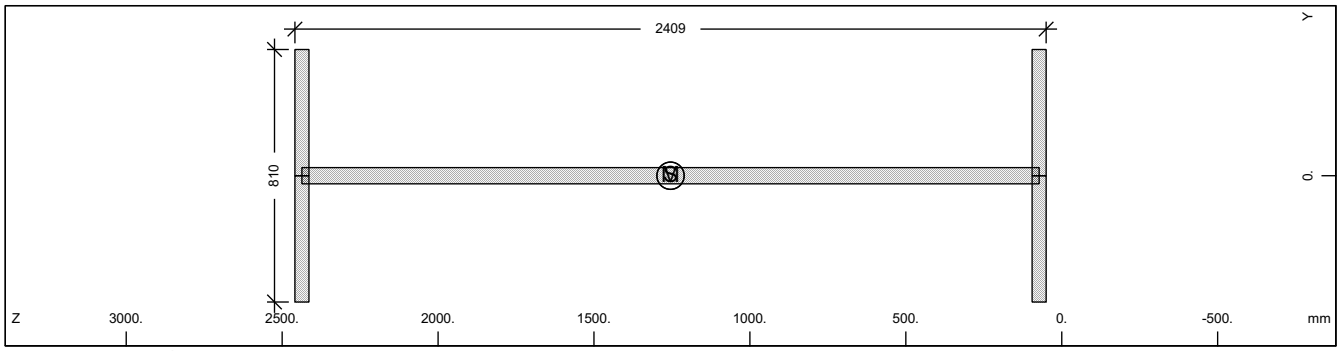

Cross section No. 266

Static properties of cross section

Mat NoR	A[cm2] It[cm4]	Ay/Az/Ayz [cm2]	Iy/Iz/Iyz [cm4]	ys/zs [mm]	modules [N/mm2]	gam [kN/m]
1	1958.31	607.50	15910652.	0.0	210000	15.37
	6270.0	1167.50	398580.9	1254.5	80769	

Additional static properties of cross section

Alfa-T [1/°K]	ymin ymax [mm]	zmin zmax [mm]	hymin hzmin [mm]	AK AB [cm2]	MB	Tau-T Tau-B [1/m3]	Tau-Vy Tau-Vz [1/m2]
1.2E-05	-405.0	-1204.5		1.183E+03		3.250E+02	2.058E+01
	405.0	1204.5				1.255E+02	9.598E+00

Section values for warping

Wmin[cm2]	Wmax[cm2]	CM[cm6]	CMS[cm4]	ASwyy[cm6]	ASwzz[cm6]	ry[mm]	rz[mm]
-4787.20	4787.205568895046.		8487874.3	0.72	28.57	0.0	0.0

Design values of cross section

Mat NoR	A[cm2] It[cm4]	Ay/Az/Ayz [cm2]	Iy/Iz/Iyz [cm4]	ys/zs [mm]	modules [N/mm2]	gam [kN/m]
1	1958.31	607.50	15910652.	0.0	182609	15.37
	6270.0	1167.50	398580.9	1254.5	70234	

Design forces and moments
(C/E = characteristic plastic/elastic, D=plast.Design, F=elast. Design)

	N[kN]	Vy[kN]	Vz[kN]	Mt[kNm]	My[kNm]	Mz[kNm]	y[mm]	z[mm]	BUCK
C	65603.2	14099.76	23776.28	935.43	53205.69	5480.72	0.0	1255.	c c
C	0.0				0.00	0.00	0.0	0.0	COMB
E	65603.2	9399.84	20150.80	595.15	44250.41	3296.90	0.0	1255.	

SOFiSTiK AG - www.sofistik.de

Composite bridge 38+50+38, b=14.25m, 2x2HL1100R HISTAR460 , slab 0.30m C30/37

Design forces and moments
(C/E = characteristic plastic/elastic, D=plast.Design, F=elast. Design)

	N[kN]	Vy[kN]	Vz[kN]	Mt[kNm]	My[kNm]	Mz[kNm]	y[mm]	z[mm]	BUCK
D	57046.3	12260.66	20675.02	813.42	46265.82	4765.84	0.0	1255.	
D	0.0				0.00	0.00	0.0	0.0	COMB
F	57046.3	8173.78	17522.43	517.52	38478.62	2866.87	0.0	1255.	

Additional Design Data

M	periphery-O/-I [m2/m]	[m2/m]	deff [mm]	t-min [mm]	t-max [mm]	SMP [o/o]	thet-p [tm2/m]	thet-y [tm2/m]	thet-z [tm2/m]	thet-yz [tm2/m]
	7.968		49.2	45.0	52.0	0.0	1.280	1.249	0.031	

Cross section No. 266.4 = CS 21 - reinf active:C2

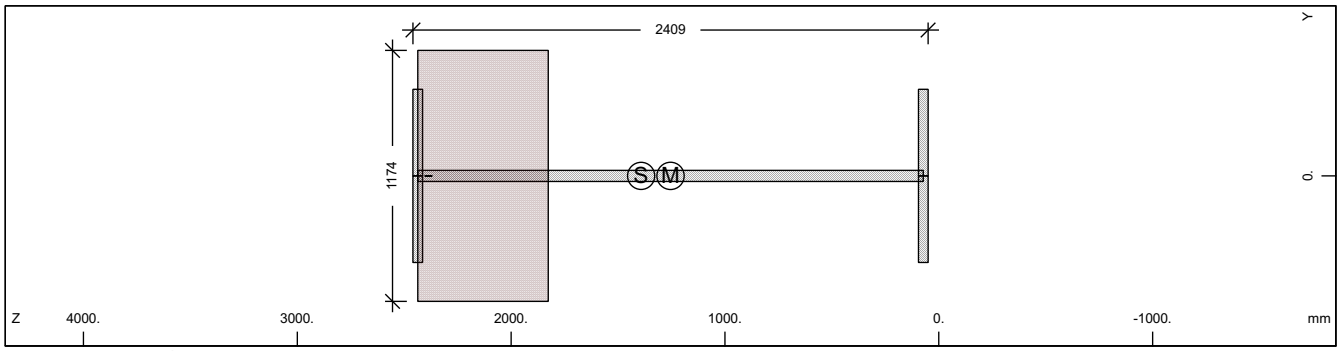

Cross section No. 266

Static properties of cross section

Mat NoR	A[cm2] It[cm4]	Ay/Az/Ayz [cm2]	Iy/Iz/Iyz [cm4]	ys/zs [mm]	modules [N/mm2]	gam [kN/m]
1	2322.70	607.50	18389154.	0.0	210000	33.28
	6270.0	1088.81	398580.9	1392.2	80769	

Additional static properties of cross section

Alfa-T [1/°K]	ymin ymax [mm]	zmin zmax [mm]	hymin hzmin [mm]	AK AB [cm2]	MB	Tau-T Tau-B [1/m3]	Tau-Vy Tau-Vz [1/m2]
1.2E-05	-587.0	-1342.2		4.817E+03		3.537E+00	2.058E+01
	587.0	1066.9		7.162E+03		1.255E+02	9.766E+00

Section values for warping

Wmin[cm2]	Wmax[cm2]	CM[cm6]	CMS[cm4]	ASwyy[cm6]	ASwzz[cm6]	ry[mm]	rz[mm]
-4787.20	4787.205568895046.		8487873.6	-5.47	-252.50	0.0	6.1

Partial cross sections

Mat NoR	A[cm2] It[cm4]	Ay/Az/Ayz [cm2]	Iy/Iz/Iyz [cm4]	ys/zs [mm]	modules [N/mm2]	gam [kN/m]
1	1958.31	607.50	15910652.	0.0	210000	15.37
	16000.9	1082.34	398580.9	1254.5	80769	
25	7161.96		2221155.7	0.0	10667	17.90
	32903880.	117.62	0.0	2131.5	4444	
210	0.64	0.00	0.0	0.0	200000	0.00
	2.2	0.00	0.0	2386.5	76923	

Design values of cross section

Mat NoR	A[cm2] It[cm4]	Ay/Az/Ayz [cm2]	Iy/Iz/Iyz [cm4]	ys/zs [mm]	modules [N/mm2]	gam [kN/m]
1	2237.82	607.50	17881234.	0.0	182609	33.28
	6270.0	1087.30	398580.9	1364.1	70234	

Design forces and moments
(C/E = characteristic plastic/elastic, D=plast.Design, F=elast. Design)

	N[kN]	Vy[kN]	Vz[kN]	Mt[kNm]	My[kNm]	Mz[kNm]	y[mm]	z[mm]	BUCK
C	65635.4	14118.33	36055.39	7879.83	53242.07	8738.03	6.5	1256.	c c
C	-4763.7				53567.75	0.00	0.0	1392.	COMB

SOFiSTiK AG - www.sofistik.de

Composite bridge 38+50+38, b=14.25m, 2x2HL1100R HISTAR460 , slab 0.30m C30/37

Design forces and moments
(C/E = characteristic plastic/elastic, D=plast.Design, F=elast. Design)

	N[kN]	Vy[kN]	Vz[kN]	Mt[kNm]	My[kNm]	Mz[kNm]	y[mm]	z[mm]	BUCK
C	-10742.9				0.00	8634.03	0.0	0.0	COMB
C	-87121.3	14118.33	36055.39	7879.83	-58086.3	-8599.36	-6.5	1759.	
C	-16722.2				-69453.2	0.00	0.0	1392.	COMB
C	-10742.9				0.00	-8634.03	0.0	0.0	COMB
E	77810.4	9399.84	19805.38	4665.35	45898.26	3296.90	0.0	1392.	
E	-77810.4	9399.84	19805.38	4665.35	-45898.3	-3296.90	0.0	1392.	
D	57074.2	12276.81	28954.82	5444.58	46297.46	6921.40	5.0	1256.	
D	-4142.4				46580.65	0.00	0.0	1392.	COMB
D	-7162.0				0.00	6868.10	0.0	0.0	COMB
D	-71398.2	12276.81	28954.82	5444.58	-49074.4	-6850.34	-5.0	1675.	
D	-10181.5				-57171.0	0.00	0.0	1392.	COMB
D	-7162.0				0.00	-6868.10	0.0	0.0	COMB
F	67661.2	8173.78	17222.07	3110.24	39911.53	2866.87	0.0	1392.	
F	-67661.2	8173.78	17222.07	3110.24	-39911.5	-2866.87	0.0	1392.	

Additional Design Data

M	periphery-O/-I [m2/m]	[m2/m]	deff [mm]	t-min [mm]	t-max [mm]	SMP [o/o]	thet-p [tm2/m]	thet-y [tm2/m]	thet-z [tm2/m]	thet-yz [tm2/m]
	9.192		50.5	32.0	610.0	0.0	1.972	1.941	0.031	
1	7.968		49.2	45.0	52.0	0.0	1.280	1.249	0.031	
25	1.220		1174.0			0.0	0.056	0.056		
**	0.004		32.0			0.0	0.000		0.000	

Cross section No. 266.5 = CS 30 - in-situ conc:C3

Cross section No. 267 - VFT (253)

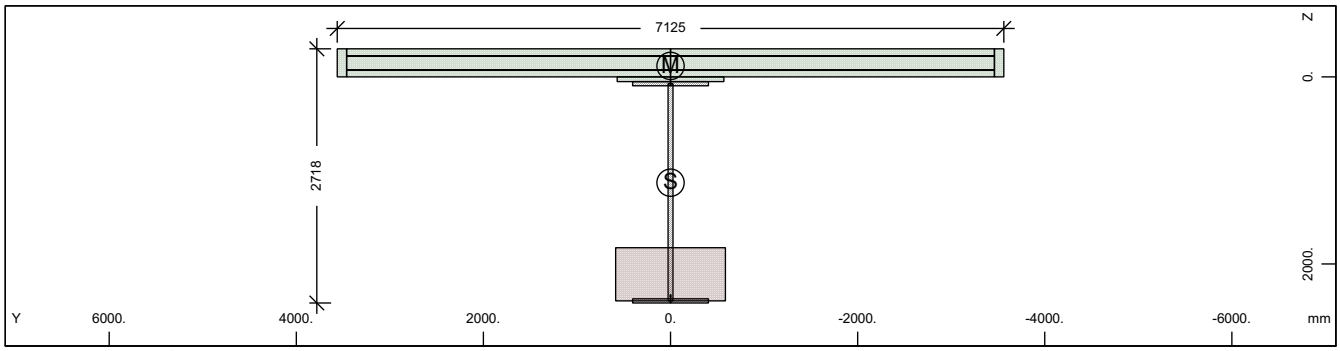

Cross section No. 267 - VFT (253)

Static properties of cross section

Mat NoR	A[cm2] It[cm4]	Ay/Az/Ayz [cm2]	Iy/Iz/Iyz [cm4]	ys/zs [mm]	y/z-sc [mm]	modules [N/mm2]	gam [kN/m]
1	2690.59	361.86	25640068.	0.0	0.0	210000	86.75
	6270.0	802.99	16951391.	1131.5	-117.5	80769	

Additional static properties of cross section

Alfa-T [1/°K]	ymin ymax [mm]	zmin zmax [mm]	hymin hzmin [mm]	AK AB [cm2]	MB	Tau-T Tau-B [1/m3]	Tau-Vy Tau-Vz [1/m2]
1.2E-05	-3562.5	-1431.5		4.492E+03		3.793E+00	3.368E+01
	3562.5	1286.0		2.862E+04		1.255E+02	1.745E+01

Section values for warping

Wmin[cm2]	Wmax[cm2]	CM[cm6]	CMS[cm4]	ASwyy[cm6]	ASwzz[cm6]	ry[mm]	rz[mm]
-10175.77	10175.77	1.376E+10	3085379.3	-105.98	-160.30	0.0	1647.2

SOFiSTiK AG - www.sofistik.de

Composite bridge 38+50+38, b=14.25m, 2x2HL1100R HISTAR460 , slab 0.30m C30/37

Partial cross sections

Mat NoR	A[cm2] It[cm4]	Ay/Az/Ayz [cm2]	Iy/Iz/Iyz [cm4]	ys/zs [mm]	modules [N/mm2]	gam [kN/m]
1	1936.74	0.12	15260314.	0.0	210000	15.20
	15806.5	530.01	398580.9	1233.8	80769	
25	6675.04		1798224.5	0.0	10667	16.69
	30666819.	49.76	0.0	2110.8	4444	
210	0.64	0.00	0.0	0.0	200000	0.00
	2.2	0.00	0.0	2345.1	76923	
31	21945.00	17824.57	170028.4	0.0	0	54.86
	6417251.4	12417.62	904880243.	-145.5	0	
300	434.90	379.83	24463.0	0.0	200000	0.00
	14.3	283.22	17380446.	-150.0	76923	

Design values of cross section

Mat NoR	A[cm2] It[cm4]	Ay/Az/Ayz [cm2]	Iy/Iz/Iyz [cm4]	ys/zs [mm]	modules [N/mm2]	gam [kN/m]
1	2611.48	361.86	24837142.	0.0	182609	86.75
	6270.0	801.85	16951391.	1101.9	70234	

Design forces and moments
(C/E = characteristic plastic/elastic, D=plast.Design, F=elast. Design)

	N[kN]	Vy[kN]	Vz[kN]	Mt[kNm]	My[kNm]	Mz[kNm]	y[mm]	z[mm]	BUCK
C	86657.8	62881.99	63635.28	105984.1	92047.49	103374.5	26.0	-98.0	c c
C	-83985.2				164011.1	0.00	0.0	1132.	COMB
C	-42930.1				0.00	103411.8	0.0	0.0	COMB
C	-160525.	62881.99	63635.27	105984.1	-99499.9	-102854.	-26.0	1185.	
C	-1874.9				-99550.3	0.00	0.0	1132.	COMB
C	-42930.1				0.00	-103412.	0.0	0.0	COMB
E	90134.7	8571.15	16545.88	4350.48	66789.75	25702.01	0.0	1132.	
E	-90134.7	8571.15	16545.88	4350.48	-66789.8	-25702.0	0.0	1132.	
D	75354.6	47333.19	47792.99	70862.74	78826.77	77670.65	20.0	-36.6	
D	-59672.8				125560.6	0.00	0.0	1132.	COMB
D	-28620.0				0.00	77689.79	0.0	0.0	COMB
D	-124600.	47333.19	47792.98	70862.73	-82489.0	-77403.6	-20.0	1051.	
D	2432.7				-82586.7	0.00	0.0	1132.	COMB
D	-28620.0				0.00	-77689.8	0.0	0.0	COMB
F	78378.0	7453.17	14387.72	2900.32	58078.05	22349.58	0.0	1132.	
F	-78378.0	7453.17	14387.72	2900.32	-58078.0	-22349.6	0.0	1132.	

Additional Design Data

M	periphery-O/-I [m2/m]	[m2/m]	deff [mm]	t-min [mm]	t-max [mm]	SMP [o/o]	thet-p [tm2/m]	thet-y [tm2/m]	thet-z [tm2/m]	thet-yz [tm2/m]
	53.257		10.1	3.1	568.6	0.0	31.327	8.673	22.653	
1	7.885		49.1	45.0	52.0	0.0	1.229	1.198	0.031	
25	1.137		1174.0			0.0	0.045	0.045		
**	0.004		32.0			0.0	0.000		0.000	
31	16.530		265.5	50.0	300.0	0.0	22.626	0.004	22.622	
**	27.700		3.1	3.1	3.1	0.0	0.000	0.000	0.000	

SOFiSTiK AG - www.sofistik.de

Composite bridge 38+50+38, b=14.25m, 2x2HL1100R HISTAR460 , slab 0.30m C30/37

Cross section No. 267.1 = CS 1 - steel alone

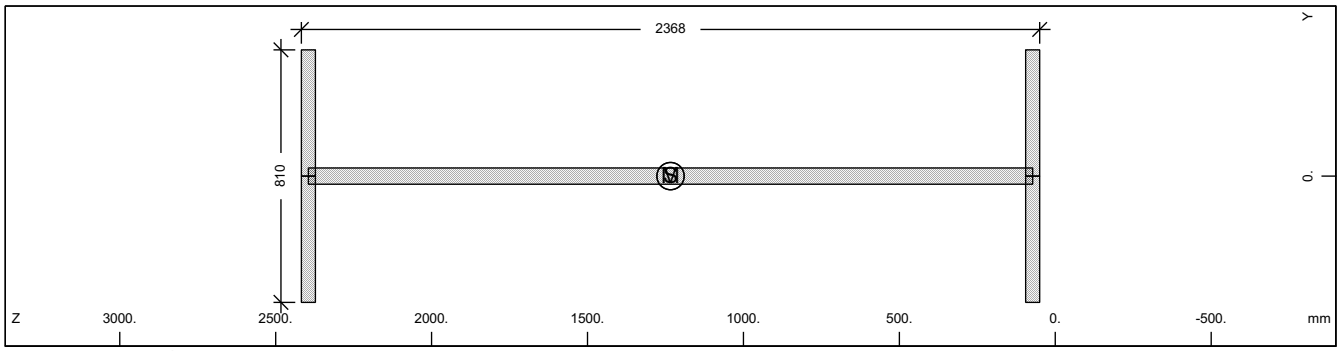

Cross section No. 267

Static properties of cross section

Mat NoR	A[cm2] It[cm4]	Ay/Az/Ayz [cm2]	Iy/Iz/Iyz [cm4]	ys/zs [mm]	modules [N/mm2]	gam [kN/m]
1	1936.74	607.50	15260314.	0.0	210000	15.20
	6270.0	1146.74	398580.9	1233.8	80769	

Additional static properties of cross section

Alfa-T [1/°K]	ymin ymax [mm]	zmin zmax [mm]	hymin hzmin [mm]	AK AB [cm2]	MB	Tau-T Tau-B [1/m3]	Tau-Vy Tau-Vz [1/m2]
1.2E-05	-405.0	-1183.8		1.169E+03		3.290E+02	2.058E+01
	405.0	1183.8				1.255E+02	9.753E+00

Section values for warping

Wmin[cm2]	Wmax[cm2]	CM[cm6]	CMS[cm4]	ASwyy[cm6]	ASwzz[cm6]	ry[mm]	rz[mm]
-4703.21	4703.21	5375203232.	8192657.0	5.88	225.14	0.0	0.0

Design values of cross section

Mat NoR	A[cm2] It[cm4]	Ay/Az/Ayz [cm2]	Iy/Iz/Iyz [cm4]	ys/zs [mm]	modules [N/mm2]	gam [kN/m]
1	1936.74	607.50	15260314.	0.0	182609	15.20
	6270.0	1146.74	398580.9	1233.8	70234	

Design forces and moments
(C/E = characteristic plastic/elastic, D=plast.Design, F=elast. Design)

	N[kN]	Vy[kN]	Vz[kN]	Mt[kNm]	My[kNm]	Mz[kNm]	y[mm]	z[mm]	BUCK
C	64880.7	14099.76	23359.14	924.58	51852.71	5471.32	0.0	1234.	c c
C	0.0				0.00	0.00	0.0	0.0	COMB
E	64880.7	9399.84	19831.44	587.92	43185.19	3296.90	0.0	1234.	
D	56418.0	12260.66	20312.29	803.98	45089.31	4757.67	0.0	1234.	
D	0.0				0.00	0.00	0.0	0.0	COMB
F	56418.0	8173.78	17244.73	511.23	37552.34	2866.87	0.0	1234.	

Additional Design Data

M	periphery-O/-I [m2/m] [m2/m]	deff [mm]	t-min [mm]	t-max [mm]	SMP [o/o]	thet-p [tm2/m]	thet-y [tm2/m]	thet-z [tm2/m]	thet-yz [tm2/m]
	7.885	49.1	45.0	52.0	0.0	1.229	1.198	0.031	

SOFiSTiK AG - www.sofistik.de

Composite bridge 38+50+38, b=14.25m, 2x2HL1100R HISTAR460 , slab 0.30m C30/37

Cross section No. 267.2 = CS 10 - prefab. slab C1

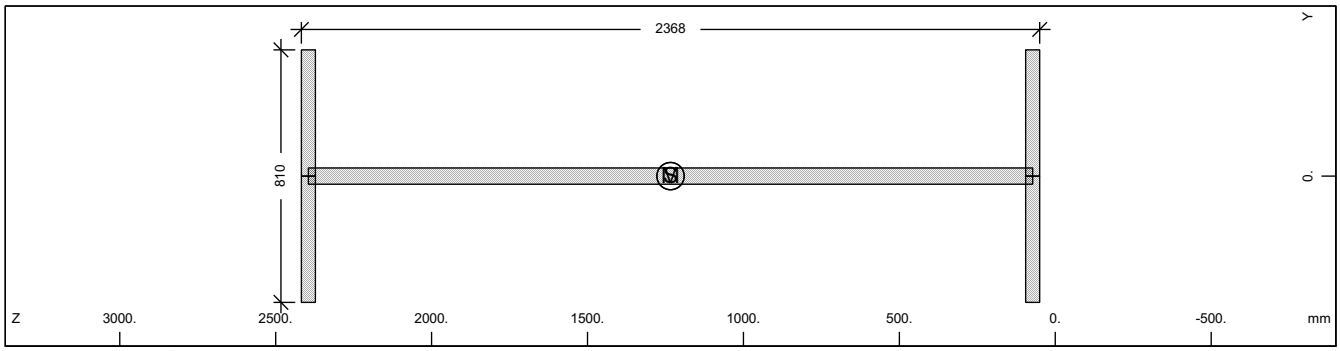

Cross section No. 267

Static properties of cross section

Mat NoR	A[cm2] It[cm4]	Ay/Az/Ayz [cm2]	Iy/Iz/Iyz [cm4]	ys/zs [mm]	modules [N/mm2]	gam [kN/m]
1	1936.74	607.50	15260314.	0.0	210000	15.20
	6270.0	1146.74	398580.9	1233.8	80769	

Additional static properties of cross section

Alfa-T [1/°K]	ymin ymax [mm]	zmin zmax [mm]	hymin hzmin [mm]	AK AB [cm2]	MB	Tau-T Tau-B [1/m3]	Tau-Vy Tau-Vz [1/m2]
1.2E-05	-405.0	-1183.8		1.169E+03		3.290E+02	2.058E+01
	405.0	1183.8				1.255E+02	9.753E+00

Section values for warping

Wmin[cm2]	Wmax[cm2]	CM[cm6]	CMS[cm4]	ASwyy[cm6]	ASwzz[cm6]	ry[mm]	rz[mm]
-4703.21	4703.21	5375203232.	8192657.0	5.88	225.14	0.0	0.0

Design values of cross section

Mat NoR	A[cm2] It[cm4]	Ay/Az/Ayz [cm2]	Iy/Iz/Iyz [cm4]	ys/zs [mm]	modules [N/mm2]	gam [kN/m]
1	1936.74	607.50	15260314.	0.0	182609	15.20
	6270.0	1146.74	398580.9	1233.8	70234	

Design forces and moments
(C/E = characteristic plastic/elastic, D=plast.Design, F=elast. Design)

	N[kN]	Vy[kN]	Vz[kN]	Mt[kNm]	My[kNm]	Mz[kNm]	y[mm]	z[mm]	BUCK
C	64880.7	14099.76	23359.14	924.58	51852.71	5471.32	0.0	1234.	c c
C	0.0				0.00	0.00	0.0	0.0	COMB
E	64880.7	9399.84	19831.44	587.92	43185.19	3296.90	0.0	1234.	
D	56418.0	12260.66	20312.29	803.98	45089.31	4757.67	0.0	1234.	
D	0.0				0.00	0.00	0.0	0.0	COMB
F	56418.0	8173.78	17244.73	511.23	37552.34	2866.87	0.0	1234.	

Additional Design Data

M	periphery-O/-I [m2/m] [m2/m]	deff [mm]	t-min [mm]	t-max [mm]	SMP [o/o]	thet-p [tm2/m]	thet-y [tm2/m]	thet-z [tm2/m]	thet-yz [tm2/m]
	7.885	49.1	45.0	52.0	0.0	1.229	1.198	0.031	

SOFiSTiK AG - www.sofistik.de

Composite bridge 38+50+38, b=14.25m, 2x2HL1100R HISTAR460 , slab 0.30m C30/37

Cross section No. 267.3 = CS 20 - in-situ conc:C2

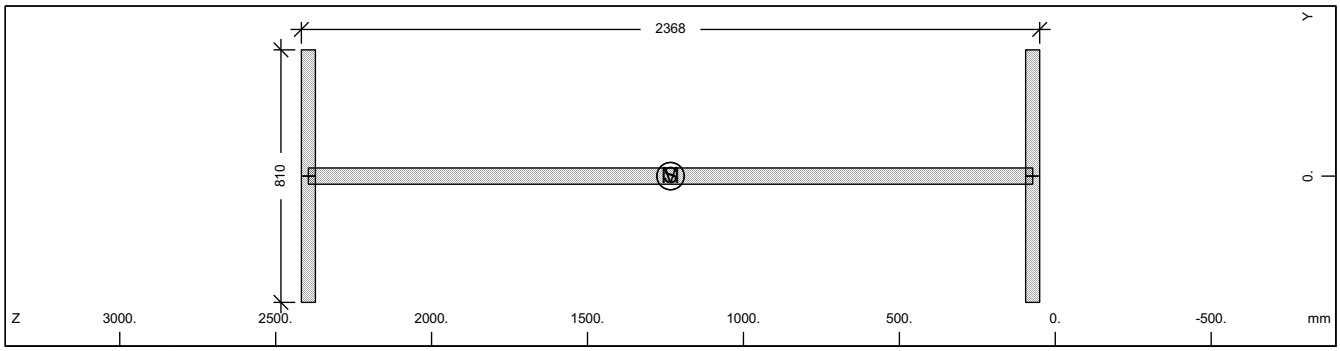

Cross section No. 267

Static properties of cross section

Mat / NoR	A[cm2] / It[cm4]	Ay/Az/Ayz [cm2]	Iy/Iz/Iyz [cm4]	ys/zs [mm]	modules [N/mm2]	gam [kN/m]
1	1936.74	607.50	15260314.	0.0	210000	15.20
	6270.0	1146.74	398580.9	1233.8	80769	

Additional static properties of cross section

Alfa-T [1/°K]	ymin / ymax [mm]	zmin / zmax [mm]	hymin / hzmin [mm]	AK / AB [cm2]	MB	Tau-T / Tau-B [1/m3]	Tau-Vy / Tau-Vz [1/m2]
1.2E-05	-405.0	-1183.8		1.169E+03		3.290E+02	2.058E+01
	405.0	1183.8				1.255E+02	9.753E+00

Section values for warping

Wmin[cm2]	Wmax[cm2]	CM[cm6]	CMS[cm4]	ASwyy[cm6]	ASwzz[cm6]	ry[mm]	rz[mm]
-4703.21	4703.21	5375203232.	8192657.0	5.88	225.14	0.0	0.0

Design values of cross section

Mat / NoR	A[cm2] / It[cm4]	Ay/Az/Ayz [cm2]	Iy/Iz/Iyz [cm4]	ys/zs [mm]	modules [N/mm2]	gam [kN/m]
1	1936.74	607.50	15260314.	0.0	182609	15.20
	6270.0	1146.74	398580.9	1233.8	70234	

Design forces and moments
(C/E = characteristic plastic/elastic, D=plast.Design, F=elast. Design)

	N[kN]	Vy[kN]	Vz[kN]	Mt[kNm]	My[kNm]	Mz[kNm]	y[mm]	z[mm]	BUCK
C	64880.7	14099.76	23359.14	924.58	51852.71	5471.32	0.0	1234.	c c
C	0.0				0.00	0.00	0.0	0.0	COMB
E	64880.7	9399.84	19831.44	587.92	43185.19	3296.90	0.0	1234.	
D	56418.0	12260.66	20312.29	803.98	45089.31	4757.67	0.0	1234.	
D	0.0				0.00	0.00	0.0	0.0	COMB
F	56418.0	8173.78	17244.73	511.23	37552.34	2866.87	0.0	1234.	

Additional Design Data

M	periphery-O/-I [m2/m]	[m2/m]	deff [mm]	t-min [mm]	t-max [mm]	SMP [o/o]	thet-p [tm2/m]	thet-y [tm2/m]	thet-z [tm2/m]	thet-yz [tm2/m]
	7.885		49.1	45.0	52.0	0.0	1.229	1.198	0.031	

SOFiSTiK AG - www.sofistik.de

Composite bridge 38+50+38, b=14.25m, 2x2HL1100R HISTAR460 , slab 0.30m C30/37

Cross section No. 267.4 = CS 21 - reinf active:C2

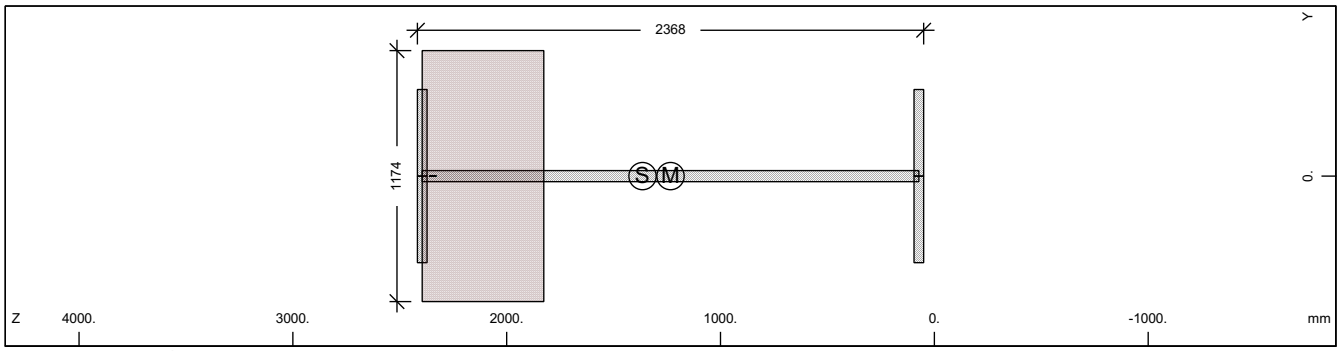

Cross section No. 267

Static properties of cross section

Mat NoR	A[cm2] It[cm4]	Ay/Az/Ayz [cm2]	Iy/Iz/Iyz [cm4]	ys/zs [mm]	modules [N/mm2]	gam [kN/m]
1	2276.40	607.50	17576766.	0.0	210000	31.89
	6270.0	1075.66	398580.9	1364.7	80769	

Additional static properties of cross section

Alfa-T [1/°K]	ymin ymax [mm]	zmin zmax [mm]	hymin hzmin [mm]	AK AB [cm2]	MB	Tau-T Tau-B [1/m3]	Tau-Vy Tau-Vz [1/m2]
1.2E-05	-587.0	-1314.7		4.492E+03		3.793E+00	2.058E+01
	587.0	1052.9		6.675E+03		1.255E+02	9.903E+00

Section values for warping

Wmin[cm2]	Wmax[cm2]	CM[cm6]	CMS[cm4]	ASwyy[cm6]	ASwzz[cm6]	ry[mm]	rz[mm]
-4703.21	4703.21	5375203232.	8192657.0	5.52	243.26	0.0	7.5

Partial cross sections

Mat NoR	A[cm2] It[cm4]	Ay/Az/Ayz [cm2]	Iy/Iz/Iyz [cm4]	ys/zs [mm]	modules [N/mm2]	gam [kN/m]
1	1936.74	607.50	15260314.	0.0	210000	15.20
	15806.5	1069.86	398580.9	1233.8	80769	
25	6675.04		1798224.5	0.0	10667	16.69
	30666819.	105.28	0.0	2110.8	4444	
210	0.64	0.00	0.0	0.0	200000	0.00
	2.2	0.00	0.0	2345.1	76923	

Design values of cross section

Mat NoR	A[cm2] It[cm4]	Ay/Az/Ayz [cm2]	Iy/Iz/Iyz [cm4]	ys/zs [mm]	modules [N/mm2]	gam [kN/m]
1	2197.29	607.50	17099236.	0.0	182609	31.89
	6270.0	1074.30	398580.9	1337.8	70234	

Design forces and moments
(C/E = characteristic plastic/elastic, D=plast.Design, F=elast. Design)

	N[kN]	Vy[kN]	Vz[kN]	Mt[kNm]	My[kNm]	Mz[kNm]	y[mm]	z[mm]	BUCK
C	64912.9	14118.33	34834.83	7397.38	51888.43	8502.21	6.1	1235.	c c
C	-4529.1				52182.82	0.00	0.0	1365.	COMB
C	-10012.6				0.00	8410.27	0.0	0.0	COMB
C	-84938.0	14118.33	34834.83	7397.38	-56229.4	-8379.62	-6.1	1716.	
C	-15496.0				-67123.1	0.00	0.0	1365.	COMB
C	-10012.6				0.00	-8410.27	0.0	0.0	COMB
E	76259.4	9399.84	19530.01	4350.45	44787.30	3296.90	0.0	1365.	
E	-76259.4	9399.84	19530.01	4350.45	-44787.3	-3296.90	0.0	1365.	
D	56446.0	12276.81	28056.47	5120.74	45120.38	6764.13	4.7	1235.	
D	-3938.4				45376.36	0.00	0.0	1365.	COMB
D	-6675.0				0.00	6717.02	0.0	0.0	COMB
D	-69796.0	12276.81	28056.47	5120.74	-47603.9	-6701.32	-4.7	1634.	
D	-9411.7				-55336.6	0.00	0.0	1365.	COMB
D	-6675.0				0.00	-6717.02	0.0	0.0	COMB

SOFiSTiK AG - www.sofistik.de

Composite bridge 38+50+38, b=14.25m, 2x2HL1100R HISTAR460 , slab 0.30m C30/37

Design forces and moments
(C/E = characteristic plastic/elastic, D=plast.Design, F=elast. Design)

	N[kN]	Vy[kN]	Vz[kN]	Mt[kNm]	My[kNm]	Mz[kNm]	y[mm]	z[mm]	BUCK
F	66312.5	8173.78	16982.62	2900.30	38945.48	2866.87	0.0	1365.	
F	-66312.5	8173.78	16982.62	2900.30	-38945.5	-2866.87	0.0	1365.	

Additional Design Data

M	periphery-O/-I [m2/m]	[m2/m]	deff [mm]	t-min [mm]	t-max [mm]	SMP [o/o]	thet-p [tm2/m]	thet-y [tm2/m]	thet-z [tm2/m]	thet-yz [tm2/m]
	9.026		50.4	32.0	568.6	0.0	1.886	1.855	0.031	
1	7.885		49.1	45.0	52.0	0.0	1.229	1.198	0.031	
25	1.137		1174.0			0.0	0.045	0.045		
**	0.004		32.0			0.0	0.000		0.000	

Cross section No. 267.5 = CS 30 - in-situ conc:C3

Cross section No. 268 - VFT (253)

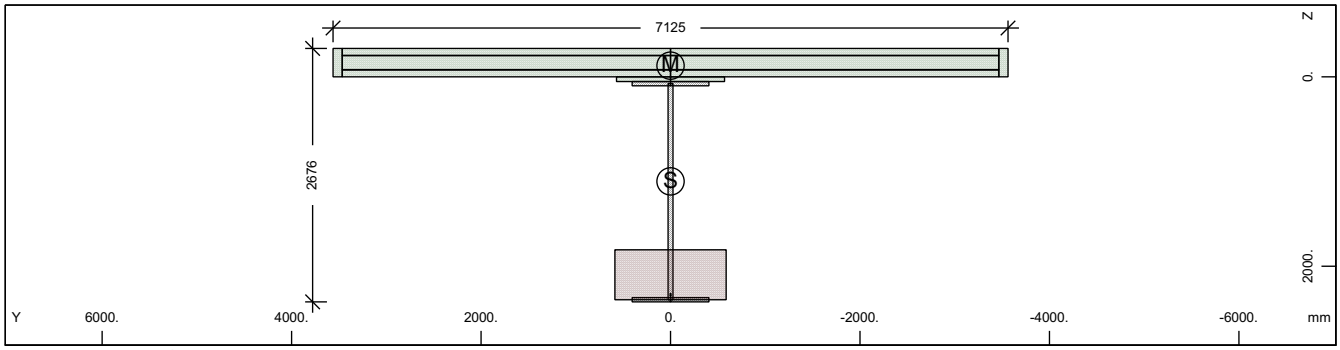

Cross section No. 268 - VFT (253)

Static properties of cross section

Mat NoR	A[cm2] It[cm4]	Ay/Az/Ayz [cm2]	Iy/Iz/Iyz [cm4]	ys/zs [mm]	y/z-sc [mm]	modules [N/mm2]	gam [kN/m]
1	2644.66	362.14	24534449.	0.0	0.0	210000	85.37
	6270.0	785.08	16996625.	1103.9	-118.0	80769	

Additional static properties of cross section

Alfa-T [1/°K]	ymin ymax [mm]	zmin zmax [mm]	hymin hzmin [mm]	AK AB [cm2]	MB	Tau-T Tau-B [1/m3]	Tau-Vy Tau-Vz [1/m2]
1.2E-05	-3562.5	-1403.9		4.167E+03		4.089E+00	3.365E+01
	3562.5	1272.2		2.813E+04		1.255E+02	1.788E+01

Section values for warping

Wmin[cm2]	Wmax[cm2]	CM[cm6]	CMS[cm4]	ASwyy[cm6]	ASwzz[cm6]	ry[mm]	rz[mm]
-10010.11	10010.11	1.335E+10	2919871.9	-383.30	-553.29	0.0	1589.0

Partial cross sections

Mat NoR	A[cm2] It[cm4]	Ay/Az/Ayz [cm2]	Iy/Iz/Iyz [cm4]	ys/zs [mm]	modules [N/mm2]	gam [kN/m]
1	1915.17	0.12	14626625.	0.0	210000	15.03
	15612.1	511.89	398580.9	1213.0	80769	
25	6188.11		1432702.8	0.0	10667	15.47
	28429735.	42.48	0.0	2090.0	4444	
210	0.64	0.00	0.0	0.0	200000	0.00
	2.2	0.00	0.0	2303.6	76923	
31	21945.00	17757.61	170028.4	0.0	0	54.86
	6417251.4	12409.94	904880243.	-145.5	0	
300	435.29	380.13	24485.3	0.0	200000	0.00
	14.3	283.86	17427942.	-150.0	76923	

SOFiSTiK AG - www.sofistik.de

Composite bridge 38+50+38, b=14.25m, 2x2HL1100R HISTAR460 , slab 0.30m C30/37

Design values of cross section

Mat NoR	A[cm2] It[cm4]	Ay/Az/Ayz [cm2]	Iy/Iz/Iyz [cm4]	ys/zs [mm]	modules [N/mm2]	gam [kN/m]
1	2571.32	362.14	23783848.	0.0	182609	85.37
	6270.0	784.03	16996625.	1075.7	70234	

Design forces and moments
(C/E = characteristic plastic/elastic, D=plast.Design, F=elast. Design)

	N[kN]	Vy[kN]	Vz[kN]	Mt[kNm]	My[kNm]	Mz[kNm]	y[mm]	z[mm]	BUCK
C	85955.0	62893.41	62414.70	105501.7	89764.85	103193.7	26.2	-74.3	c c
C	-83763.6				160300.0	0.00	0.0	1104.	COMB
C	-42199.7				0.00	103256.6	0.0	0.0	COMB
C	-158740.	62893.41	62414.69	105501.6	-96352.9	-102708.	-26.2	1122.	
C	-635.7				-96358.7	0.00	0.0	1104.	COMB
C	-42199.7				0.00	-103257.	0.0	0.0	COMB
E	88596.2	8578.40	16147.34	4035.58	64603.43	25747.17	0.0	1104.	
E	-88596.2	8578.40	16147.34	4035.58	-64603.4	-25747.2	0.0	1104.	
D	74743.5	47343.12	46894.63	70538.91	76870.99	77564.56	20.0	-41.1	
D	-59480.1				122703.1	0.00	0.0	1104.	COMB
D	-28133.1				0.00	77598.32	0.0	0.0	COMB
D	-123267.	47343.12	46894.63	70538.91	-79905.1	-77316.9	-20.0	998.0	
D	3213.9				-80075.6	0.00	0.0	1104.	COMB
D	-28133.1				0.00	-77598.3	0.0	0.0	COMB
F	77040.2	7459.48	14041.17	2690.38	56176.89	22388.84	0.0	1104.	
F	-77040.2	7459.48	14041.17	2690.38	-56176.9	-22388.8	0.0	1104.	

Additional Design Data

M	periphery-O/-I [m2/m]	[m2/m]	deff [mm]	t-min [mm]	t-max [mm]	SMP [o/o]	thet-p [tm2/m]	thet-y [tm2/m]	thet-z [tm2/m]	thet-yz [tm2/m]
	53.116		10.0	3.1	527.1	0.0	30.803	8.150	22.653	
1	7.802		49.1	45.0	52.0	0.0	1.179	1.148	0.031	
25	1.054		1174.0			0.0	0.036	0.036		
**	0.004		32.0			0.0	0.000		0.000	
31	16.530		265.5	50.0	300.0	0.0	22.626	0.004	22.622	
**	27.726		3.1	3.1	3.1	0.0	0.000	0.000	0.000	

Cross section No. 268.1 = CS 1 - steel alone

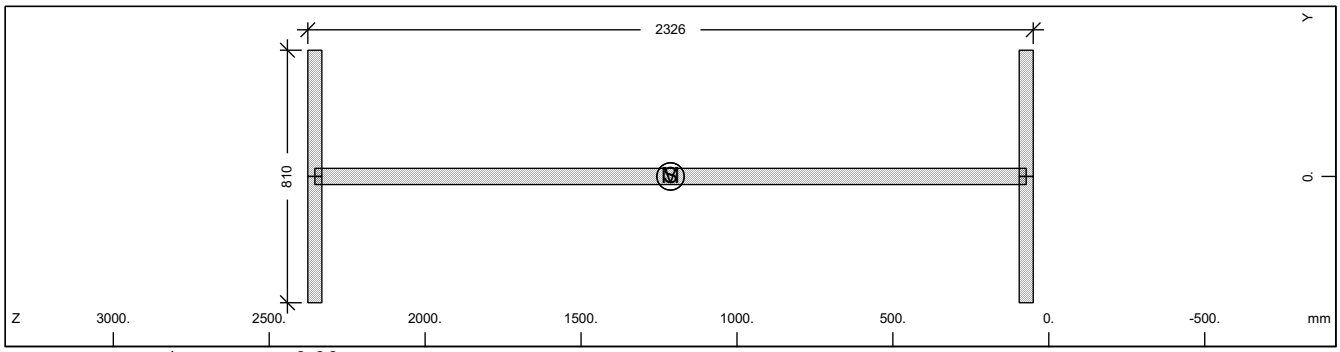

Cross section No. 268

Static properties of cross section

Mat NoR	A[cm2] It[cm4]	Ay/Az/Ayz [cm2]	Iy/Iz/Iyz [cm4]	ys/zs [mm]	modules [N/mm2]	gam [kN/m]
1	1915.17	607.50	14626625.	0.0	210000	15.03
	6270.0	1125.96	398580.9	1213.0	80769	

Additional static properties of cross section

Alfa-T [1/°K]	ymin / ymax [mm]	zmin / zmax [mm]	hymin / hzmin [mm]	AK / AB [cm2]	MB	Tau-T / Tau-B [1/m3]	Tau-Vy / Tau-Vz [1/m2]
1.2E-05	-405.0	-1163.0		1.155E+03		3.331E+02	2.058E+01
	405.0	1163.0				1.255E+02	9.913E+00

SOFiSTiK AG - www.sofistik.de

Composite bridge 38+50+38, b=14.25m, 2x2HL1100R HISTAR460 , slab 0.30m C30/37

Section values for warping

Wmin[cm2]	Wmax[cm2]	CM[cm6]	CMS[cm4]	ASwyy[cm6]	ASwzz[cm6]	ry[mm]	rz[mm]
-4619.22	4619.225184937755.	7902662.5		0.24	8.96	0.0	0.0

Design values of cross section

Mat	A[cm2]	Ay/Az/Ayz	Iy/Iz/Iyz	ys/zs	modules	gam
NoR	It[cm4]	[cm2]	[cm4]	[mm]	[N/mm2]	[kN/m]
1	1915.17	607.50	14626625.	0.0	182609	15.03
	6270.0	1125.96	398580.9	1213.0	70234	

Design forces and moments
(C/E = characteristic plastic/elastic, D=plast.Design, F=elast. Design)

	N[kN]	Vy[kN]	Vz[kN]	Mt[kNm]	My[kNm]	Mz[kNm]	y[mm]	z[mm]	BUCK
C	64158.2	14099.76	22941.99	913.74	50514.70	5461.93	0.0	1213.	c c
C	0.0				0.00	0.00	0.0	0.0	COMB
E	64158.2	9399.84	19511.41	580.69	42129.98	3296.90	0.0	1213.	
D	55789.7	12260.66	19949.56	794.55	43925.82	4749.51	0.0	1213.	
D	0.0				0.00	0.00	0.0	0.0	COMB
F	55789.7	8173.78	16966.45	504.95	36634.77	2866.87	0.0	1213.	

Additional Design Data

M	periphery-O/-I		deff	t-min	t-max	SMP	thet-p	thet-y	thet-z	thet-yz
	[m2/m]	[m2/m]	[mm]	[mm]	[mm]	[o/o]	[tm2/m]	[tm2/m]	[tm2/m]	[tm2/m]
	7.802		49.1	45.0	52.0	0.0	1.179	1.148	0.031	

Cross section No. 268.2 = CS 10 - prefab. slab C1

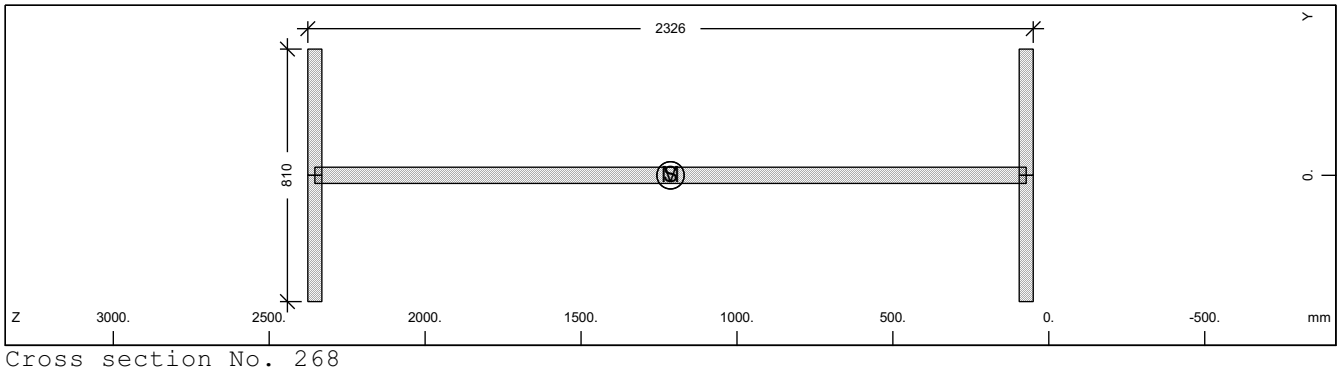

Cross section No. 268

Static properties of cross section

Mat	A[cm2]	Ay/Az/Ayz	Iy/Iz/Iyz	ys/zs	modules	gam
NoR	It[cm4]	[cm2]	[cm4]	[mm]	[N/mm2]	[kN/m]
1	1915.17	607.50	14626625.	0.0	210000	15.03
	6270.0	1125.96	398580.9	1213.0	80769	

Additional static properties of cross section

Alfa-T	ymin	zmin	hymin	AK	MB	Tau-T	Tau-Vy
	ymax	zmax	hzmin	AB		Tau-B	Tau-Vz
[1/°K]	[mm]	[mm]	[mm]	[cm2]		[1/m3]	[1/m2]
1.2E-05	-405.0	-1163.0		1.155E+03		3.331E+02	2.058E+01
	405.0	1163.0				1.255E+02	9.913E+00

Section values for warping

Wmin[cm2]	Wmax[cm2]	CM[cm6]	CMS[cm4]	ASwyy[cm6]	ASwzz[cm6]	ry[mm]	rz[mm]
-4619.22	4619.225184937755.	7902662.5		0.24	8.96	0.0	0.0

Design values of cross section

Mat	A[cm2]	Ay/Az/Ayz	Iy/Iz/Iyz	ys/zs	modules	gam
NoR	It[cm4]	[cm2]	[cm4]	[mm]	[N/mm2]	[kN/m]
1	1915.17	607.50	14626625.	0.0	182609	15.03
	6270.0	1125.96	398580.9	1213.0	70234	

SOFiSTiK AG - www.sofistik.de

Composite bridge 38+50+38, b=14.25m, 2x2HL1100R HISTAR460 , slab 0.30m C30/37

Design forces and moments
(C/E = characteristic plastic/elastic, D=plast.Design, F=elast. Design)

	N[kN]	Vy[kN]	Vz[kN]	Mt[kNm]	My[kNm]	Mz[kNm]	y[mm]	z[mm]	BUCK
C	64158.2	14099.76	22941.99	913.74	50514.70	5461.93	0.0	1213.	c c
C	0.0				0.00	0.00	0.0	0.0	COMB
E	64158.2	9399.84	19511.41	580.69	42129.98	3296.90	0.0	1213.	
D	55789.7	12260.66	19949.56	794.55	43925.82	4749.51	0.0	1213.	
D	0.0				0.00	0.00	0.0	0.0	COMB
F	55789.7	8173.78	16966.45	504.95	36634.77	2866.87	0.0	1213.	

Additional Design Data

M	periphery-O/-I [m2/m]	[m2/m]	deff [mm]	t-min [mm]	t-max [mm]	SMP [o/o]	thet-p [tm2/m]	thet-y [tm2/m]	thet-z [tm2/m]	thet-yz [tm2/m]
	7.802		49.1	45.0	52.0	0.0	1.179	1.148	0.031	

Cross section No. 268.3 = CS 20 - in-situ conc:C2

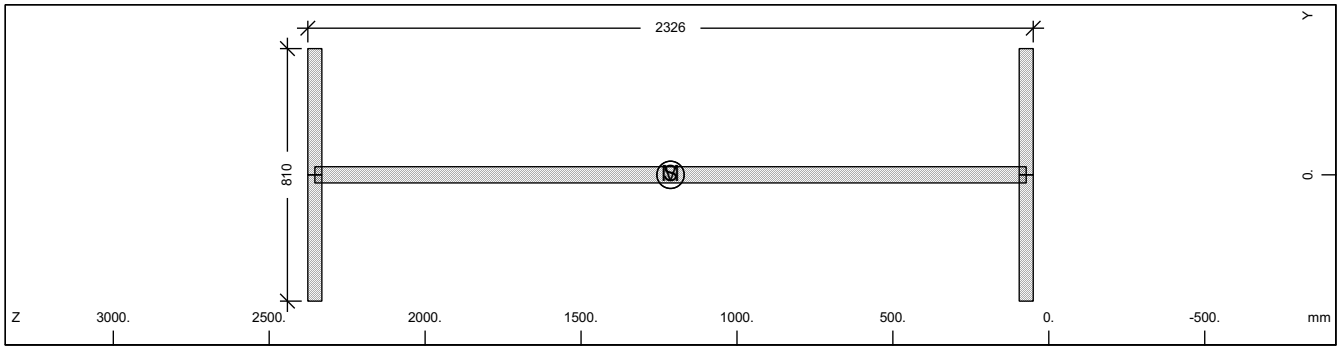

Cross section No. 268

Static properties of cross section

Mat NoR	A[cm2] It[cm4]	Ay/Az/Ayz [cm2]	Iy/Iz/Iyz [cm4]	ys/zs [mm]	modules [N/mm2]	gam [kN/m]
1	1915.17	607.50	14626625.	0.0	210000	15.03
	6270.0	1125.96	398580.9	1213.0	80769	

Additional static properties of cross section

Alfa-T [1/°K]	ymin ymax [mm]	zmin zmax [mm]	hymin hzmin [mm]	AK AB [cm2]	MB	Tau-T Tau-B [1/m3]	Tau-Vy Tau-Vz [1/m2]
1.2E-05	-405.0	-1163.0		1.155E+03		3.331E+02	2.058E+01
	405.0	1163.0				1.255E+02	9.913E+00

Section values for warping

Wmin[cm2]	Wmax[cm2]	CM[cm6]	CMS[cm4]	ASwyy[cm6]	ASwzz[cm6]	ry[mm]	rz[mm]
-4619.22	4619.225184937755.		7902662.5	0.24	8.96	0.0	0.0

Design values of cross section

Mat NoR	A[cm2] It[cm4]	Ay/Az/Ayz [cm2]	Iy/Iz/Iyz [cm4]	ys/zs [mm]	modules [N/mm2]	gam [kN/m]
1	1915.17	607.50	14626625.	0.0	182609	15.03
	6270.0	1125.96	398580.9	1213.0	70234	

Design forces and moments
(C/E = characteristic plastic/elastic, D=plast.Design, F=elast. Design)

	N[kN]	Vy[kN]	Vz[kN]	Mt[kNm]	My[kNm]	Mz[kNm]	y[mm]	z[mm]	BUCK
C	64158.2	14099.76	22941.99	913.74	50514.70	5461.93	0.0	1213.	c c
C	0.0				0.00	0.00	0.0	0.0	COMB
E	64158.2	9399.84	19511.41	580.69	42129.98	3296.90	0.0	1213.	
D	55789.7	12260.66	19949.56	794.55	43925.82	4749.51	0.0	1213.	
D	0.0				0.00	0.00	0.0	0.0	COMB
F	55789.7	8173.78	16966.45	504.95	36634.77	2866.87	0.0	1213.	

SOFiSTiK AG - www.sofistik.de

Composite bridge 38+50+38, b=14.25m, 2x2HL1100R HISTAR460 , slab 0.30m C30/37

Additional Design Data

M	periphery-O/-I [m2/m]	[m2/m]	deff [mm]	t-min [mm]	t-max [mm]	SMP [o/o]	thet-p [tm2/m]	thet-y [tm2/m]	thet-z [tm2/m]	thet-yz [tm2/m]
	7.802		49.1	45.0	52.0	0.0	1.179	1.148	0.031	

Cross section No. 268.4 = CS 21 - reinf active:C2

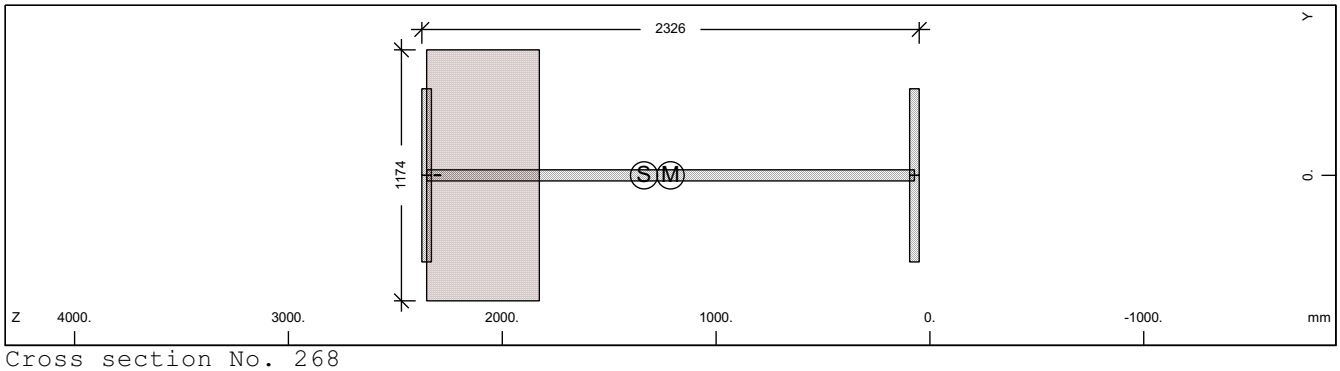

Cross section No. 268

Static properties of cross section

Mat NoR	A[cm2] It[cm4]	Ay/Az/Ayz [cm2]	Iy/Iz/Iyz [cm4]	ys/zs [mm]	modules [N/mm2]	gam [kN/m]
1	2230.10	607.50	16781798.	0.0	210000	30.50
	6270.0	1062.52	398580.9	1337.0	80769	

Additional static properties of cross section

Alfa-T [1/°K]	ymin ymax [mm]	zmin zmax [mm]	hymin hzmin [mm]	AK AB [cm2]	MB	Tau-T Tau-B [1/m3]	Tau-Vy Tau-Vz [1/m2]
1.2E-05	-587.0	-1287.0		4.167E+03		4.089E+00	2.058E+01
	587.0	1039.1		6.188E+03		1.255E+02	1.005E+01

Section values for warping

Wmin[cm2]	Wmax[cm2]	CM[cm6]	CMS[cm4]	ASwyy[cm6]	ASwzz[cm6]	ry[mm]	rz[mm]
-4619.22	4619.22	5184937755.	7902662.5	3.37	141.85	0.0	8.8

Partial cross sections

Mat NoR	A[cm2] It[cm4]	Ay/Az/Ayz [cm2]	Iy/Iz/Iyz [cm4]	ys/zs [mm]	modules [N/mm2]	gam [kN/m]
1	1915.17	607.50	14626625.	0.0	210000	15.03
	15612.1	1057.41	398580.9	1213.0	80769	
25	6188.11		1432702.8	0.0	10667	15.47
	28429735.	92.95	0.0	2090.0	4444	
210	0.64	0.00	0.0	0.0	200000	0.00
	2.2	0.00	0.0	2303.6	76923	

Design values of cross section

Mat NoR	A[cm2] It[cm4]	Ay/Az/Ayz [cm2]	Iy/Iz/Iyz [cm4]	ys/zs [mm]	modules [N/mm2]	gam [kN/m]
1	2156.76	607.50	16334723.	0.0	182609	30.50
	6270.0	1061.33	398580.9	1311.3	70234	

Design forces and moments
(C/E = characteristic plastic/elastic, D=plast.Design, F=elast. Design)

	N[kN]	Vy[kN]	Vz[kN]	Mt[kNm]	My[kNm]	Mz[kNm]	y[mm]	z[mm]	BUCK
C	64190.3	14118.33	33614.25	6914.91	50549.75	8266.95	5.8	1214.	c c
C	-4284.7				50813.23	0.00	0.0	1337.	COMB
C	-9282.2				0.00	8186.50	0.0	0.0	COMB
C	-82754.7	14118.33	33614.25	6914.91	-54404.8	-8159.69	-5.8	1671.	
C	-14279.6				-64793.9	0.00	0.0	1337.	COMB
C	-9282.2				0.00	-8186.50	0.0	0.0	COMB
E	74708.3	9399.84	19254.30	4035.54	43683.77	3296.90	0.0	1337.	
E	-74708.3	9399.84	19254.30	4035.54	-43683.8	-3296.90	0.0	1337.	
D	55817.7	12276.81	27158.11	4796.90	43956.30	6607.15	4.4	1214.	

SOFiSTiK AG - www.sofistik.de

Composite bridge 38+50+38, b=14.25m, 2x2HL1100R HISTAR460 , slab 0.30m C30/37

Design forces and moments
(C/E = characteristic plastic/elastic, D=plast.Design, F=elast. Design)

	N[kN]	Vy[kN]	Vz[kN]	Mt[kNm]	My[kNm]	Mz[kNm]	y[mm]	z[mm]	BUCK
D	-3725.9				44185.41	0.00	0.0	1337.	COMB
D	-6188.1				0.00	6565.94	0.0	0.0	COMB
D	-68193.9	12276.81	27158.11	4796.90	-46157.7	-6552.20	-4.4	1592.	
D	-8650.4				-53505.9	0.00	0.0	1337.	COMB
D	-6188.1				0.00	-6565.94	0.0	0.0	COMB
F	64963.8	8173.78	16742.88	2690.36	37985.89	2866.87	0.0	1337.	
F	-64963.8	8173.78	16742.88	2690.36	-37985.9	-2866.87	0.0	1337.	

Additional Design Data

M	periphery-O/-I [m2/m]	[m2/m]	deff [mm]	t-min [mm]	t-max [mm]	SMP [o/o]	thet-p [tm2/m]	thet-y [tm2/m]	thet-z [tm2/m]	thet-yz [tm2/m]
	8.860		50.3	32.0	527.1	0.0	1.802	1.770	0.031	
1	7.802		49.1	45.0	52.0	0.0	1.179	1.148	0.031	
25	1.054		1174.0			0.0	0.036	0.036		
**	0.004		32.0			0.0	0.000		0.000	

Cross section No. 268.5 = CS 30 - in-situ conc:C3

Cross section No. 269 - VFT (253)

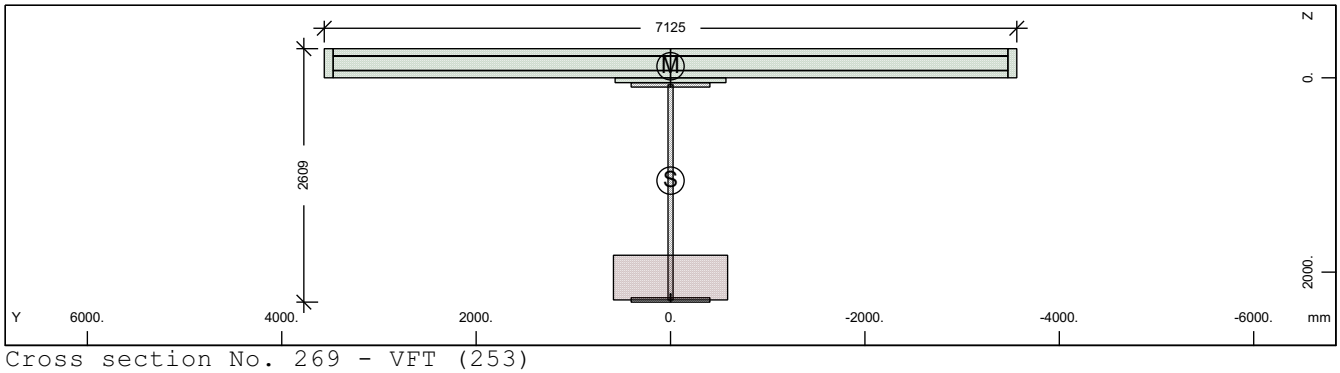

Cross section No. 269 - VFT (253)

Static properties of cross section

Mat NoR	A[cm2] It[cm4]	Ay/Az/Ayz [cm2]	Iy/Iz/Iyz [cm4]	ys/zs [mm]	y/z-sc [mm]	modules [N/mm2]	gam [kN/m]
1	2570.00	362.60	22778714.	0.0	0.0	210000	83.11
	6270.0	755.50	17070349.	1058.4	-119.0	80769	

Additional static properties of cross section

Alfa-T [1/°K]	ymin ymax [mm]	zmin zmax [mm]	hymin hzmin [mm]	AK AB [cm2]	MB	Tau-T Tau-B [1/m3]	Tau-Vy Tau-Vz [1/m2]
1.2E-05	-3562.5	-1358.4		3.638E+03		4.683E+00	3.361E+01
	3562.5	1250.3		2.734E+04		1.255E+02	1.862E+01

Section values for warping

Wmin[cm2]	Wmax[cm2]	CM[cm6]	CMS[cm4]	ASwyy[cm6]	ASwzz[cm6]	ry[mm]	rz[mm]
-9740.74	9740.74	1.270E+10	2664024.6	146.00	194.82	0.0	1492.1

Partial cross sections

Mat NoR	A[cm2] It[cm4]	Ay/Az/Ayz [cm2]	Iy/Iz/Iyz [cm4]	ys/zs [mm]	modules [N/mm2]	gam [kN/m]
1	1880.10	0.12	13631398.	0.0	210000	14.76
	15296.0	482.24	398580.9	1179.3	80769	
25	5396.41		950160.9	0.0	10667	13.49
	24792472.	31.58	0.0	2056.3	4444	
210	0.64	0.00	0.0	0.0	200000	0.00
	2.2	0.00	0.0	2236.2	76923	
31	21945.00	17649.41	170028.4	0.0	0	54.86
	6417251.4	12382.29	904880243.	-145.5	0	

SOFiSTiK AG - www.sofistik.de

Composite bridge 38+50+38, b=14.25m, 2x2HL1100R HISTAR460 , slab 0.30m C30/37

300	435.94	380.61	24521.5	0.0	200000	0.00
	14.3	284.56	17505352.	-150.0	76923	

Design values of cross section

Mat	A[cm2]	Ay/Az/Ayz	Iy/Iz/Iyz	ys/zs	modules	gam
NoR	It[cm4]	[cm2]	[cm4]	[mm]	[N/mm2]	[kN/m]
1	2506.04	362.60	22114225.	0.0	182609	83.11
	6270.0	754.59	17070347.	1032.9	70234	

Design forces and moments
(C/E = characteristic plastic/elastic, D=plast.Design, F=elast. Design)

	N[kN]	Vy[kN]	Vz[kN]	Mt[kNm]	My[kNm]	Mz[kNm]	y[mm]	z[mm]	BUCK
C	84812.5	62911.99	60430.16	104717.3	86129.09	102901.4	26.6	-74.4	c c
C	-83385.4				154256.2	0.00	0.0	1058.	COMB
C	-41012.1				0.00	103004.4	0.0	0.0	COMB
C	-155837.	62911.99	60430.15	104717.2	-91132.2	-102471.	-26.6	1019.	
C	1361.1				-91158.8	0.00	0.0	1058.	COMB
C	-41012.1				0.00	-103004.	0.0	0.0	COMB
E	86094.9	8590.19	15500.39	3523.57	61032.67	25820.67	0.0	1058.	
E	-86094.9	8590.19	15500.39	3523.57	-61032.7	-25820.7	0.0	1058.	
D	73750.0	47359.28	45434.00	70012.41	73740.48	77392.14	20.0	-48.5	
D	-59151.2				118055.4	0.00	0.0	1058.	COMB
D	-27341.4				0.00	77449.72	0.0	0.0	COMB
D	-121100.	47359.28	45433.99	70012.41	-75660.9	-77176.0	-20.0	911.0	
D	4468.4				-75990.5	0.00	0.0	1058.	COMB
D	-27341.4				0.00	-77449.7	0.0	0.0	COMB
F	74865.1	7469.73	13478.60	2349.05	53071.89	22452.76	0.0	1058.	
F	-74865.1	7469.73	13478.60	2349.05	-53071.9	-22452.8	0.0	1058.	

Additional Design Data

M	periphery-O/-I		deff	t-min	t-max	SMP	thet-p	thet-y	thet-z	thet-yz
	[m2/m]	[m2/m]	[mm]	[mm]	[mm]	[o/o]	[tm2/m]	[tm2/m]	[tm2/m]	[tm2/m]
	52.887		9.7	3.1	459.7	0.0	29.963	7.309	22.653	
1	7.667		49.0	45.0	52.0	0.0	1.101	1.070	0.031	
25	0.919		1174.0			0.0	0.024	0.024		
**	0.004		32.0			0.0	0.000		0.000	
31	16.530		265.5	50.0	300.0	0.0	22.626	0.004	22.622	
**	27.767		3.1	3.1	3.1	0.0	0.000	0.000	0.000	

Cross section No. 269.1 = CS 1 - steel alone

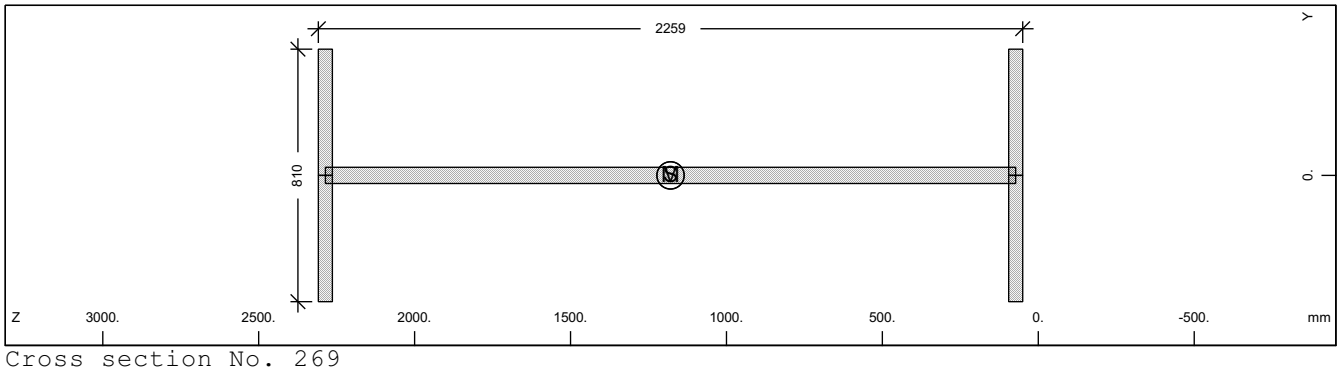

Cross section No. 269

Static properties of cross section

Mat	A[cm2]	Ay/Az/Ayz	Iy/Iz/Iyz	ys/zs	modules	gam
NoR	It[cm4]	[cm2]	[cm4]	[mm]	[N/mm2]	[kN/m]
1	1880.10	607.50	13631398.	0.0	210000	14.76
	6270.0	1092.10	398580.9	1179.3	80769	

SOFiSTiK AG - www.sofistik.de

Composite bridge 38+50+38, b=14.25m, 2x2HL1100R HISTAR460 , slab 0.30m C30/37

Additional static properties of cross section

Alfa-T	ymin ymax	zmin zmax	hymin hzmin	AK AB	MB	Tau-T Tau-B	Tau-Vy Tau-Vz
[1/°K]	[mm]	[mm]	[mm]	[cm2]		[1/m3]	[1/m2]
1.2E-05	-405.0	-1129.3		1.131E+03		3.400E+02	2.058E+01
	405.0	1129.3				1.255E+02	1.019E+01

Section values for warping

Wmin[cm2]	Wmax[cm2]	CM[cm6]	CMS[cm4]	ASwyy[cm6]	ASwzz[cm6]	ry[mm]	rz[mm]
-4482.66	4482.664882904720.		7442316.5	-1.22	-41.89	0.0	0.0

Design values of cross section

Mat NoR	A[cm2] It[cm4]	Ay/Az/Ayz [cm2]	Iy/Iz/Iyz [cm4]	ys/zs [mm]	modules [N/mm2]	gam [kN/m]
1	1880.10	607.50	13631398.	0.0	182609	14.76
	6270.0	1092.10	398580.9	1179.3	70234	

Design forces and moments
(C/E = characteristic plastic/elastic, D=plast.Design, F=elast. Design)

	N[kN]	Vy[kN]	Vz[kN]	Mt[kNm]	My[kNm]	Mz[kNm]	y[mm]	z[mm]	BUCK
C	62983.5	14099.76	22263.76	896.10	48371.22	5446.66	0.0	1179.	c c
C	0.0				0.00	0.00	0.0	0.0	COMB
E	62983.5	9399.84	18989.59	568.93	40435.64	3296.90	0.0	1179.	
D	54768.2	12260.66	19359.79	779.22	42061.93	4736.23	0.0	1179.	
D	0.0				0.00	0.00	0.0	0.0	COMB
F	54768.2	8173.78	16512.69	494.72	35161.43	2866.87	0.0	1179.	

Additional Design Data

M	periphery-O/-I [m2/m]	 [m2/m]	deff [mm]	t-min [mm]	t-max [mm]	SMP [o/o]	thet-p [tm2/m]	thet-y [tm2/m]	thet-z [tm2/m]	thet-yz [tm2/m]
	7.667		49.0	45.0	52.0	0.0	1.101	1.070	0.031	

Cross section No. 269.2 = CS 10 - prefab. slab C1

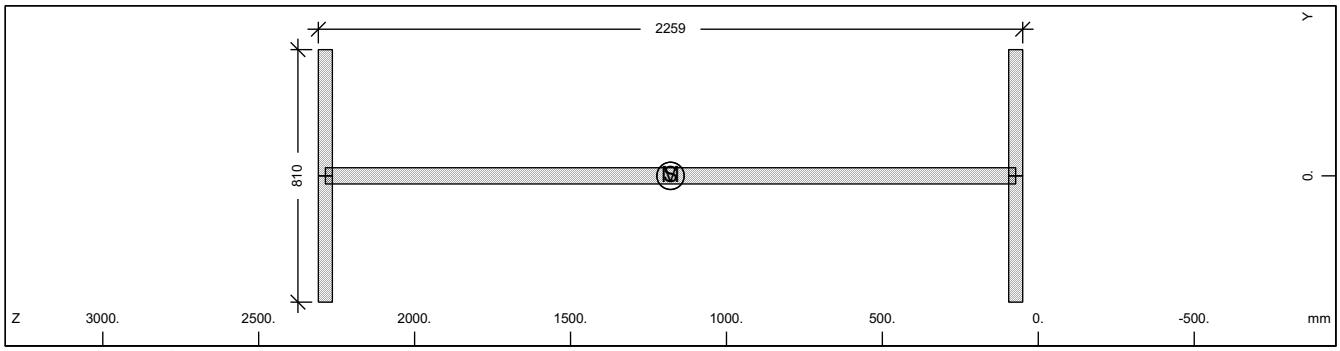

Cross section No. 269

Static properties of cross section

Mat NoR	A[cm2] It[cm4]	Ay/Az/Ayz [cm2]	Iy/Iz/Iyz [cm4]	ys/zs [mm]	modules [N/mm2]	gam [kN/m]
1	1880.10	607.50	13631398.	0.0	210000	14.76
	6270.0	1092.10	398580.9	1179.3	80769	

Additional static properties of cross section

Alfa-T	ymin ymax	zmin zmax	hymin hzmin	AK AB	MB	Tau-T Tau-B	Tau-Vy Tau-Vz
[1/°K]	[mm]	[mm]	[mm]	[cm2]		[1/m3]	[1/m2]
1.2E-05	-405.0	-1129.3		1.131E+03		3.400E+02	2.058E+01
	405.0	1129.3				1.255E+02	1.019E+01

Section values for warping

Wmin[cm2]	Wmax[cm2]	CM[cm6]	CMS[cm4]	ASwyy[cm6]	ASwzz[cm6]	ry[mm]	rz[mm]
-4482.66	4482.664882904720.		7442316.5	-1.22	-41.89	0.0	0.0

SOFiSTiK AG - www.sofistik.de

Composite bridge 38+50+38, b=14.25m, 2x2HL1100R HISTAR460 , slab 0.30m C30/37

Design values of cross section

Mat NoR	A[cm2] It[cm4]	Ay/Az/Ayz [cm2]	Iy/Iz/Iyz [cm4]	ys/zs [mm]	modules [N/mm2]	gam [kN/m]
1	1880.10	607.50	13631398.	0.0	182609	14.76
	6270.0	1092.10	398580.9	1179.3	70234	

Design forces and moments
(C/E = characteristic plastic/elastic, D=plast.Design, F=elast. Design)

	N[kN]	Vy[kN]	Vz[kN]	Mt[kNm]	My[kNm]	Mz[kNm]	y[mm]	z[mm]	BUCK
C	62983.5	14099.76	22263.76	896.10	48371.22	5446.66	0.0	1179.	c c
C	0.0				0.00	0.00	0.0	0.0	COMB
E	62983.5	9399.84	18989.59	568.93	40435.64	3296.90	0.0	1179.	
D	54768.2	12260.66	19359.79	779.22	42061.93	4736.23	0.0	1179.	
D	0.0				0.00	0.00	0.0	0.0	COMB
F	54768.2	8173.78	16512.69	494.72	35161.43	2866.87	0.0	1179.	

Additional Design Data

M	periphery-O/-I [m2/m] [m2/m]	deff [mm]	t-min [mm]	t-max [mm]	SMP [o/o]	thet-p [tm2/m]	thet-y [tm2/m]	thet-z [tm2/m]	thet-yz [tm2/m]
	7.667	49.0	45.0	52.0	0.0	1.101	1.070	0.031	

Cross section No. 269.3 = CS 20 - in-situ conc:C2

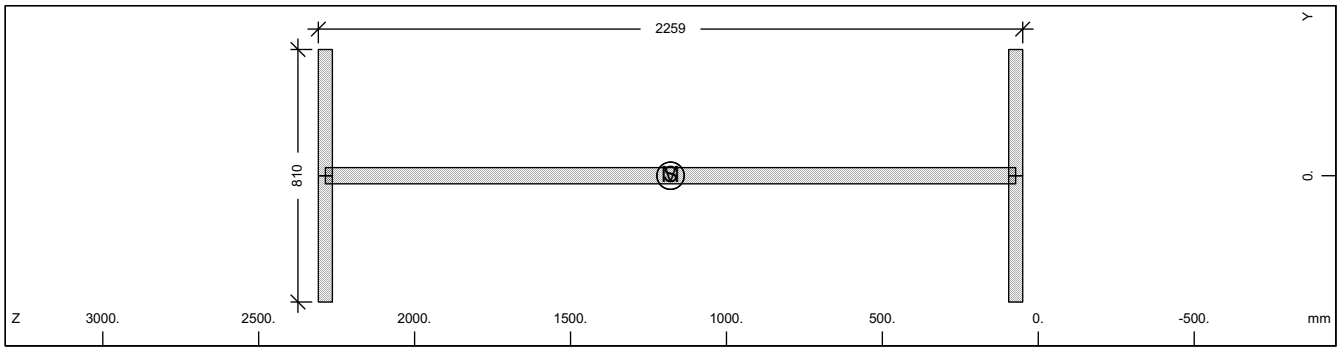

Cross section No. 269

Static properties of cross section

Mat NoR	A[cm2] It[cm4]	Ay/Az/Ayz [cm2]	Iy/Iz/Iyz [cm4]	ys/zs [mm]	modules [N/mm2]	gam [kN/m]
1	1880.10	607.50	13631398.	0.0	210000	14.76
	6270.0	1092.10	398580.9	1179.3	80769	

Additional static properties of cross section

Alfa-T [1/°K]	ymin ymax [mm]	zmin zmax [mm]	hymin hzmin [mm]	AK AB [cm2]	MB	Tau-T Tau-B [1/m3]	Tau-Vy Tau-Vz [1/m2]
1.2E-05	-405.0	-1129.3		1.131E+03		3.400E+02	2.058E+01
	405.0	1129.3				1.255E+02	1.019E+01

Section values for warping

Wmin[cm2]	Wmax[cm2]	CM[cm6]	CMS[cm4]	ASwyy[cm6]	ASwzz[cm6]	ry[mm]	rz[mm]
-4482.66	4482.66	4882904720.	7442316.5	-1.22	-41.89	0.0	0.0

Design values of cross section

Mat NoR	A[cm2] It[cm4]	Ay/Az/Ayz [cm2]	Iy/Iz/Iyz [cm4]	ys/zs [mm]	modules [N/mm2]	gam [kN/m]
1	1880.10	607.50	13631398.	0.0	182609	14.76
	6270.0	1092.10	398580.9	1179.3	70234	

Design forces and moments
(C/E = characteristic plastic/elastic, D=plast.Design, F=elast. Design)

	N[kN]	Vy[kN]	Vz[kN]	Mt[kNm]	My[kNm]	Mz[kNm]	y[mm]	z[mm]	BUCK
C	62983.5	14099.76	22263.76	896.10	48371.22	5446.66	0.0	1179.	c c
C	0.0				0.00	0.00	0.0	0.0	COMB
E	62983.5	9399.84	18989.59	568.93	40435.64	3296.90	0.0	1179.	

SOFiSTiK AG - www.sofistik.de

Composite bridge 38+50+38, b=14.25m, 2x2HL1100R HISTAR460 , slab 0.30m C30/37

Design forces and moments
(C/E = characteristic plastic/elastic, D=plast.Design, F=elast. Design)

	N[kN]	Vy[kN]	Vz[kN]	Mt[kNm]	My[kNm]	Mz[kNm]	y[mm]	z[mm]	BUCK
D	54768.2	12260.66	19359.79	779.22	42061.93	4736.23	0.0	1179.	
D	0.0				0.00	0.00	0.0	0.0	COMB
F	54768.2	8173.78	16512.69	494.72	35161.43	2866.87	0.0	1179.	

Additional Design Data

M	periphery-O/-I [m2/m]	[m2/m]	deff [mm]	t-min [mm]	t-max [mm]	SMP [o/o]	thet-p [tm2/m]	thet-y [tm2/m]	thet-z [tm2/m]	thet-yz [tm2/m]
	7.667		49.0	45.0	52.0	0.0	1.101	1.070	0.031	

Cross section No. 269.4 = CS 21 - reinf active:C2

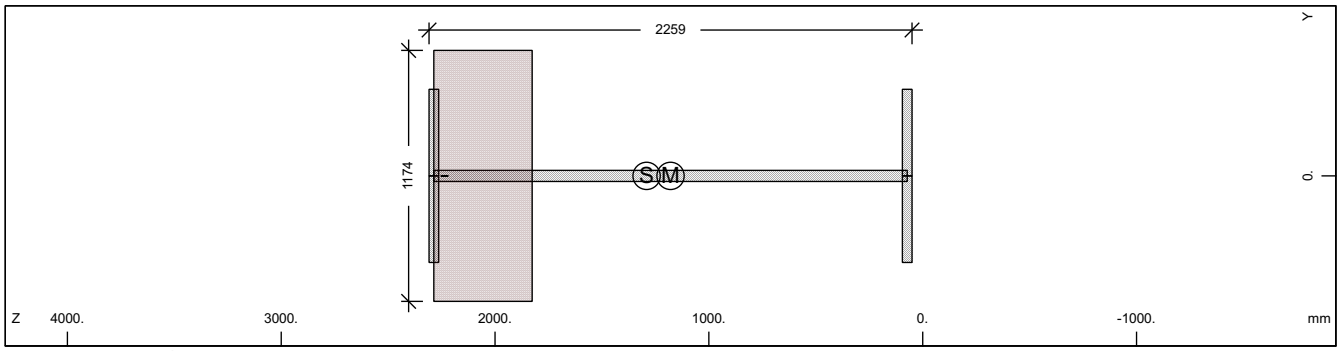

Cross section No. 269

Static properties of cross section

Mat NoR	A[cm2] It[cm4]	Ay/Az/Ayz [cm2]	Iy/Iz/Iyz [cm4]	ys/zs [mm]	modules [N/mm2]	gam [kN/m]
1	2154.82	607.50	15525088.	0.0	210000	28.25
	6270.0	1041.08	398580.9	1291.2	80769	

Additional static properties of cross section

Alfa-T [1/°K]	ymin ymax [mm]	zmin zmax [mm]	hymin hzmin [mm]	AK AB [cm2]	MB	Tau-T Tau-B [1/m3]	Tau-Vy Tau-Vz [1/m2]
1.2E-05	-587.0	-1241.2		3.638E+03		4.683E+00	2.058E+01
	587.0	1017.5		5.396E+03		1.255E+02	1.029E+01

Section values for warping

Wmin[cm2]	Wmax[cm2]	CM[cm6]	CMS[cm4]	ASwyy[cm6]	ASwzz[cm6]	ry[mm]	rz[mm]
-4482.66	4482.664882905186.		7442317.2	0.26	10.32	0.0	11.1

Partial cross sections

Mat NoR	A[cm2] It[cm4]	Ay/Az/Ayz [cm2]	Iy/Iz/Iyz [cm4]	ys/zs [mm]	modules [N/mm2]	gam [kN/m]
1	1880.10	607.50	13631398.	0.0	210000	14.76
	15296.0	1037.05	398580.9	1179.3	80769	
25	5396.41		950160.9	0.0	10667	13.49
	24792472.	73.22	0.0	2056.3	4444	
210	0.64	0.00	0.0	0.0	200000	0.00
	2.2	0.00	0.0	2236.2	76923	

Design values of cross section

Mat NoR	A[cm2] It[cm4]	Ay/Az/Ayz [cm2]	Iy/Iz/Iyz [cm4]	ys/zs [mm]	modules [N/mm2]	gam [kN/m]
1	2090.86	607.50	15127941.	0.0	182609	28.25
	6270.0	1040.14	398580.9	1267.8	70234	

Design forces and moments
(C/E = characteristic plastic/elastic, D=plast.Design, F=elast. Design)

	N[kN]	Vy[kN]	Vz[kN]	Mt[kNm]	My[kNm]	Mz[kNm]	y[mm]	z[mm]	BUCK
C	63015.6	14118.33	31629.71	6130.48	48405.19	7885.72	5.2	1180.	c c
C	-3865.0				48619.57	0.00	0.0	1291.	COMB

SOFiSTiK AG - www.sofistik.de

Composite bridge 38+50+38, b=14.25m, 2x2HL1100R HISTAR460 , slab 0.30m C30/37

Design forces and moments
(C/E = characteristic plastic/elastic, D=plast.Design, F=elast. Design)

	N[kN]	Vy[kN]	Vz[kN]	Mt[kNm]	My[kNm]	Mz[kNm]	y[mm]	z[mm]	BUCK
C	-8094.6				0.00	7822.69	0.0	0.0	COMB
C	-79204.8	14118.33	31629.71	6130.48	-51512.2	-7801.68	-5.2	1595.	
C	-12324.2				-61006.6	0.00	0.0	1291.	COMB
C	-8094.6				0.00	-7822.69	0.0	0.0	COMB
E	72186.4	9399.84	18804.10	3523.53	41902.59	3296.90	0.0	1291.	
E	-72186.4	9399.84	18804.10	3523.53	-41902.6	-3296.90	0.0	1291.	
D	54796.2	12276.81	25697.47	4270.37	42091.46	6352.58	4.0	1180.	
D	-3360.9				42277.89	0.00	0.0	1291.	COMB
D	-5396.4				0.00	6320.30	0.0	0.0	COMB
D	-65589.0	12276.81	25697.47	4270.37	-43860.7	-6309.54	-4.0	1521.	
D	-7431.9				-50535.9	0.00	0.0	1291.	COMB
D	-5396.4				0.00	-6320.30	0.0	0.0	COMB
F	62770.8	8173.78	16351.39	2349.02	36437.03	2866.87	0.0	1291.	
F	-62770.8	8173.78	16351.39	2349.02	-36437.0	-2866.87	0.0	1291.	

Additional Design Data

M	periphery-O/-I [m2/m]	[m2/m]	deff [mm]	t-min [mm]	t-max [mm]	SMP [o/o]	thet-p [tm2/m]	thet-y [tm2/m]	thet-z [tm2/m]	thet-yz [tm2/m]
	8.591		50.2	32.0	459.7	0.0	1.667	1.636	0.031	
1	7.667		49.0	45.0	52.0	0.0	1.101	1.070	0.031	
25	0.919		1174.0			0.0	0.024	0.024		
**	0.004		32.0			0.0	0.000		0.000	

Cross section No. 269.5 = CS 30 - in-situ conc:C3

Cross section No. 270 - VFT (253)

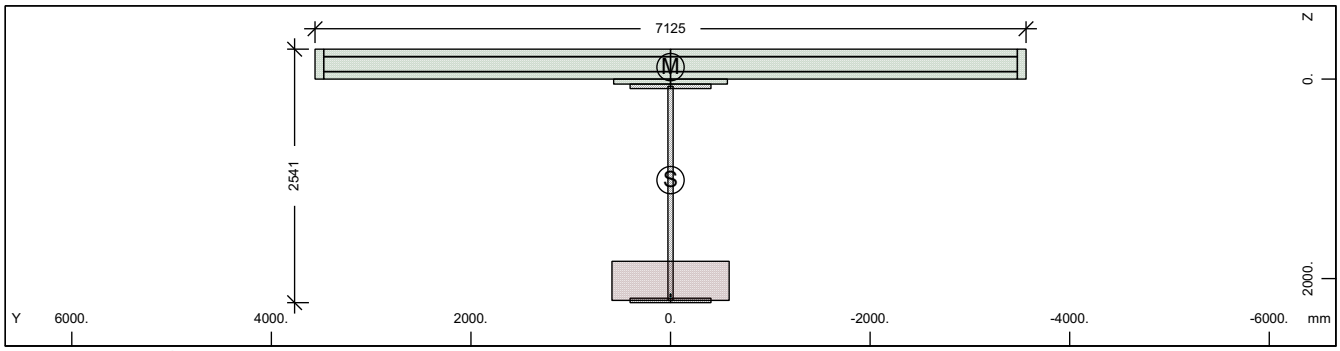

Cross section No. 270 - VFT (253)

Static properties of cross section

Mat / NoR	A[cm2] / It[cm4]	Ay/Az/Ayz [cm2]	Iy/Iz/Iyz [cm4]	ys/zs [mm]	y/z-sc [mm]	modules [N/mm2]	gam [kN/m]
1	2495.33	363.07	21072866.	0.0	0.0	210000	80.86
	6270.0	725.21	17144287.	1012.2	-119.9	80769	

Additional static properties of cross section

Alfa-T [1/°K]	ymin / ymax [mm]	zmin / zmax [mm]	hymin / hzmin [mm]	AK / AB [cm2]	MB	Tau-T / Tau-B [1/m3]	Tau-Vy / Tau-Vz [1/m2]
1.2E-05	-3562.5	-1312.2		3.109E+03		5.479E+00	3.356E+01
	3562.5	1229.0		2.655E+04		1.255E+02	1.944E+01

Section values for warping

Wmin[cm2]	Wmax[cm2]	CM[cm6]	CMS[cm4]	ASwyy[cm6]	ASwzz[cm6]	ry[mm]	rz[mm]
-9471.34	9471.34	1.207E+10	2424204.4	237.50	291.92	0.0	1391.7

SOFiSTiK AG - www.sofistik.de

Composite bridge 38+50+38, b=14.25m, 2x2HL1100R HISTAR460 , slab 0.30m C30/37

Partial cross sections

Mat NoR	A[cm2] It[cm4]	Ay/Az/Ayz [cm2]	Iy/Iz/Iyz [cm4]	ys/zs [mm]	modules [N/mm2]	gam [kN/m]
1	1845.04	0.12	12678920.	0.0	210000	14.48
	14980.0	452.31	398580.9	1145.6	80769	
25	4604.71		590322.9	0.0	10667	11.51
	21155208.	22.06	0.0	2022.6	4444	
210	0.64	0.00	0.0	0.0	200000	0.00
	2.2	0.00	0.0	2168.7	76923	
31	21945.00	17542.05	170028.4	0.0	0	54.86
	6417251.4	12331.53	904880243.	-145.5	0	
300	436.58	381.10	24557.7	0.0	200000	0.00
	14.3	284.74	17582986.	-150.0	76923	

Design values of cross section

Mat NoR	A[cm2] It[cm4]	Ay/Az/Ayz [cm2]	Iy/Iz/Iyz [cm4]	ys/zs [mm]	modules [N/mm2]	gam [kN/m]
1	2440.76	363.07	20496221.	0.0	182609	80.86
	6270.0	724.42	17144285.	989.6	70234	

Design forces and moments
(C/E = characteristic plastic/elastic, D=plast.Design, F=elast. Design)

	N[kN]	Vy[kN]	Vz[kN]	Mt[kNm]	My[kNm]	Mz[kNm]	y[mm]	z[mm]	BUCK
C	83669.9	62930.57	58445.62	103932.9	83236.91	102607.4	27.1	-83.8	c c
C	-82983.1				148196.9	0.00	0.0	1012.	COMB
C	-39824.6				0.00	102752.3	0.0	0.0	COMB
C	-152934.	62930.57	58445.62	103932.9	-85782.7	-102233.	-27.1	916.6	
C	3334.0				-85942.2	0.00	0.0	1012.	COMB
C	-39824.6				0.00	-102752.	0.0	0.0	COMB
E	83593.6	8601.98	14853.01	3011.56	57438.25	25894.29	0.0	1012.	
E	-83593.6	8601.98	14853.01	3011.56	-57438.2	-25894.3	0.0	1012.	
D	72756.4	47375.43	43973.36	69485.90	70671.14	77219.83	20.0	-55.8	
D	-58801.4				113403.4	0.00	0.0	1012.	COMB
D	-26549.7				0.00	77301.25	0.0	0.0	COMB
D	-118933.	47375.43	43973.36	69485.88	-71363.6	-77035.2	-20.0	824.1	
D	5702.0				-71900.2	0.00	0.0	1012.	COMB
D	-26549.7				0.00	-77301.2	0.0	0.0	COMB
F	72690.1	7479.98	12915.66	2007.71	49946.30	22516.78	0.0	1012.	
F	-72690.1	7479.98	12915.66	2007.71	-49946.3	-22516.8	0.0	1012.	

Additional Design Data

M	periphery-O/-I [m2/m]	[m2/m]	deff [mm]	t-min [mm]	t-max [mm]	SMP [o/o]	thet-p [tm2/m]	thet-y [tm2/m]	thet-z [tm2/m]	thet-yz [tm2/m]
	52.659		9.5	3.1	392.2	0.0	29.136	6.482	22.653	
1	7.532		49.0	45.0	52.0	0.0	1.027	0.995	0.031	
25	0.784		1174.0			0.0	0.015	0.015		
**	0.004		32.0			0.0	0.000		0.000	
31	16.530		265.5	50.0	300.0	0.0	22.626	0.004	22.622	
**	27.808		3.1	3.1	3.1	0.0	0.000	0.000	0.000	

SOFiSTiK AG - www.sofistik.de

Composite bridge 38+50+38, b=14.25m, 2x2HL1100R HISTAR460 , slab 0.30m C30/37

Cross section No. 270.1 = CS 1 - steel alone

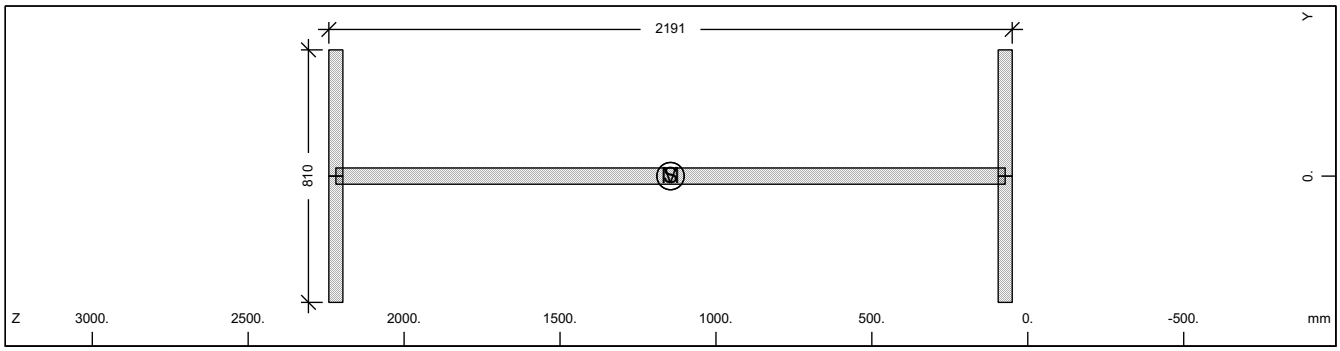

Cross section No. 270

Static properties of cross section

Mat NoR	A[cm2] It[cm4]	Ay/Az/Ayz [cm2]	Iy/Iz/Iyz [cm4]	ys/zs [mm]	modules [N/mm2]	gam [kN/m]
1	1845.04	607.50	12678920.	0.0	210000	14.48
	6270.0	1058.16	398580.9	1145.6	80769	

Additional static properties of cross section

Alfa-T [1/°K]	ymin ymax [mm]	zmin zmax [mm]	hymin hzmin [mm]	AK AB [cm2]	MB	Tau-T Tau-B [1/m3]	Tau-Vy Tau-Vz [1/m2]
1.2E-05	-405.0	-1095.6		1.108E+03		3.471E+02	2.058E+01
	405.0	1095.6				1.255E+02	1.047E+01

Section values for warping

Wmin[cm2]	Wmax[cm2]	CM[cm6]	CMS[cm4]	ASwyy[cm6]	ASwzz[cm6]	ry[mm]	rz[mm]
-4346.10	4346.10	4589934852.	6995784.5	6.89	219.32	0.0	0.0

Design values of cross section

Mat NoR	A[cm2] It[cm4]	Ay/Az/Ayz [cm2]	Iy/Iz/Iyz [cm4]	ys/zs [mm]	modules [N/mm2]	gam [kN/m]
1	1845.04	607.50	12678920.	0.0	182609	14.48
	6270.0	1058.16	398580.9	1145.6	70234	

Design forces and moments
(C/E = characteristic plastic/elastic, D=plast.Design, F=elast. Design)

	N[kN]	Vy[kN]	Vz[kN]	Mt[kNm]	My[kNm]	Mz[kNm]	y[mm]	z[mm]	BUCK
C	61808.7	14099.76	21585.53	878.47	46267.35	5431.39	0.0	1146.	c c
C	0.0				0.00	0.00	0.0	0.0	COMB
E	61808.7	9399.84	18465.88	557.17	38767.71	3296.90	0.0	1146.	
D	53746.7	12260.66	18770.02	763.89	40232.48	4722.95	0.0	1146.	
D	0.0				0.00	0.00	0.0	0.0	COMB
F	53746.7	8173.78	16057.29	484.50	33711.06	2866.87	0.0	1146.	

Additional Design Data

M	periphery-O/-I [m2/m] [m2/m]	deff [mm]	t-min [mm]	t-max [mm]	SMP [o/o]	thet-p [tm2/m]	thet-y [tm2/m]	thet-z [tm2/m]	thet-yz [tm2/m]
	7.532	49.0	45.0	52.0	0.0	1.027	0.995	0.031	

SOFiSTiK AG - www.sofistik.de

Composite bridge 38+50+38, b=14.25m, 2x2HL1100R HISTAR460 , slab 0.30m C30/37

Cross section No. 270.2 = CS 10 - prefab. slab C1

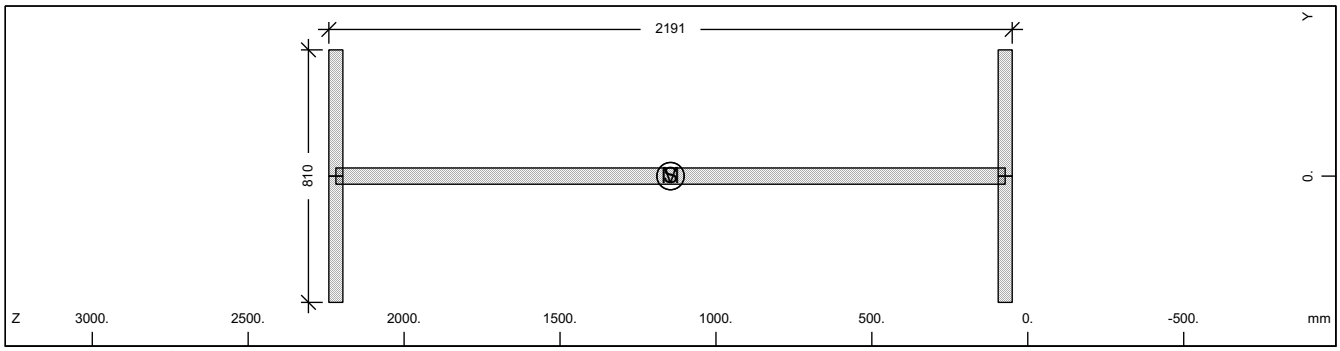

Cross section No. 270

Static properties of cross section

Mat / NoR	A[cm2] / It[cm4]	Ay/Az/Ayz [cm2]	Iy/Iz/Iyz [cm4]	ys/zs [mm]	modules [N/mm2]	gam [kN/m]
1	1845.04	607.50	12678920.	0.0	210000	14.48
	6270.0	1058.16	398580.9	1145.6	80769	

Additional static properties of cross section

Alfa-T [1/°K]	ymin / ymax [mm]	zmin / zmax [mm]	hymin / hzmin [mm]	AK / AB [cm2]	MB	Tau-T / Tau-B [1/m3]	Tau-Vy / Tau-Vz [1/m2]
1.2E-05	-405.0	-1095.6		1.108E+03		3.471E+02	2.058E+01
	405.0	1095.6				1.255E+02	1.047E+01

Section values for warping

Wmin[cm2]	Wmax[cm2]	CM[cm6]	CMS[cm4]	ASwyy[cm6]	ASwzz[cm6]	ry[mm]	rz[mm]
-4346.10	4346.10	4589934852.	6995784.5	6.89	219.32	0.0	0.0

Design values of cross section

Mat / NoR	A[cm2] / It[cm4]	Ay/Az/Ayz [cm2]	Iy/Iz/Iyz [cm4]	ys/zs [mm]	modules [N/mm2]	gam [kN/m]
1	1845.04	607.50	12678920.	0.0	182609	14.48
	6270.0	1058.16	398580.9	1145.6	70234	

Design forces and moments
(C/E = characteristic plastic/elastic, D=plast.Design, F=elast. Design)

	N[kN]	Vy[kN]	Vz[kN]	Mt[kNm]	My[kNm]	Mz[kNm]	y[mm]	z[mm]	BUCK
C	61808.7	14099.76	21585.53	878.47	46267.35	5431.39	0.0	1146.	c c
C	0.0				0.00	0.00	0.0	0.0	COMB
E	61808.7	9399.84	18465.88	557.17	38767.71	3296.90	0.0	1146.	
D	53746.7	12260.66	18770.02	763.89	40232.48	4722.95	0.0	1146.	
D	0.0				0.00	0.00	0.0	0.0	COMB
F	53746.7	8173.78	16057.29	484.50	33711.06	2866.87	0.0	1146.	

Additional Design Data

M	periphery-O/-I [m2/m]	[m2/m]	deff [mm]	t-min [mm]	t-max [mm]	SMP [o/o]	thet-p [tm2/m]	thet-y [tm2/m]	thet-z [tm2/m]	thet-yz [tm2/m]
	7.532		49.0	45.0	52.0	0.0	1.027	0.995	0.031	

SOFiSTiK AG - www.sofistik.de

Composite bridge 38+50+38, b=14.25m, 2x2HL1100R HISTAR460 , slab 0.30m C30/37

Cross section No. 270.3 = CS 20 - in-situ conc:C2

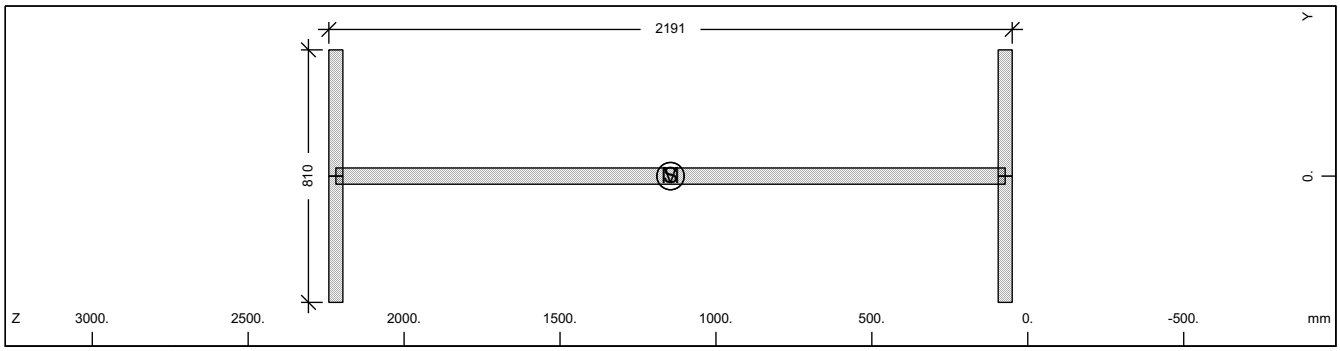

Cross section No. 270

Static properties of cross section

Mat / NoR	A[cm2] / It[cm4]	Ay/Az/Ayz [cm2]	Iy/Iz/Iyz [cm4]	ys/zs [mm]	modules [N/mm2]	gam [kN/m]
1	1845.04	607.50	12678920.	0.0	210000	14.48
	6270.0	1058.16	398580.9	1145.6	80769	

Additional static properties of cross section

Alfa-T [1/°K]	ymin / ymax [mm]	zmin / zmax [mm]	hymin / hzmin [mm]	AK / AB [cm2]	MB	Tau-T / Tau-B [1/m3]	Tau-Vy / Tau-Vz [1/m2]
1.2E-05	-405.0	-1095.6		1.108E+03		3.471E+02	2.058E+01
	405.0	1095.6				1.255E+02	1.047E+01

Section values for warping

Wmin[cm2]	Wmax[cm2]	CM[cm6]	CMS[cm4]	ASwyy[cm6]	ASwzz[cm6]	ry[mm]	rz[mm]
-4346.10	4346.10	4589934852.	6995784.5	6.89	219.32	0.0	0.0

Design values of cross section

Mat / NoR	A[cm2] / It[cm4]	Ay/Az/Ayz [cm2]	Iy/Iz/Iyz [cm4]	ys/zs [mm]	modules [N/mm2]	gam [kN/m]
1	1845.04	607.50	12678920.	0.0	182609	14.48
	6270.0	1058.16	398580.9	1145.6	70234	

Design forces and moments
(C/E = characteristic plastic/elastic, D=plast.Design, F=elast. Design)

	N[kN]	Vy[kN]	Vz[kN]	Mt[kNm]	My[kNm]	Mz[kNm]	y[mm]	z[mm]	BUCK
C	61808.7	14099.76	21585.53	878.47	46267.35	5431.39	0.0	1146.	c c
C	0.0				0.00	0.00	0.0	0.0	COMB
E	61808.7	9399.84	18465.88	557.17	38767.71	3296.90	0.0	1146.	
D	53746.7	12260.66	18770.02	763.89	40232.48	4722.95	0.0	1146.	
D	0.0				0.00	0.00	0.0	0.0	COMB
F	53746.7	8173.78	16057.29	484.50	33711.06	2866.87	0.0	1146.	

Additional Design Data

M	periphery-O/-I [m2/m]	[m2/m]	deff [mm]	t-min [mm]	t-max [mm]	SMP [o/o]	thet-p [tm2/m]	thet-y [tm2/m]	thet-z [tm2/m]	thet-yz [tm2/m]
	7.532		49.0	45.0	52.0	0.0	1.027	0.995	0.031	

SOFiSTiK AG - www.sofistik.de

Composite bridge 38+50+38, b=14.25m, 2x2HL1100R HISTAR460 , slab 0.30m C30/37

Cross section No. 270.4 = CS 21 - reinf active:C2

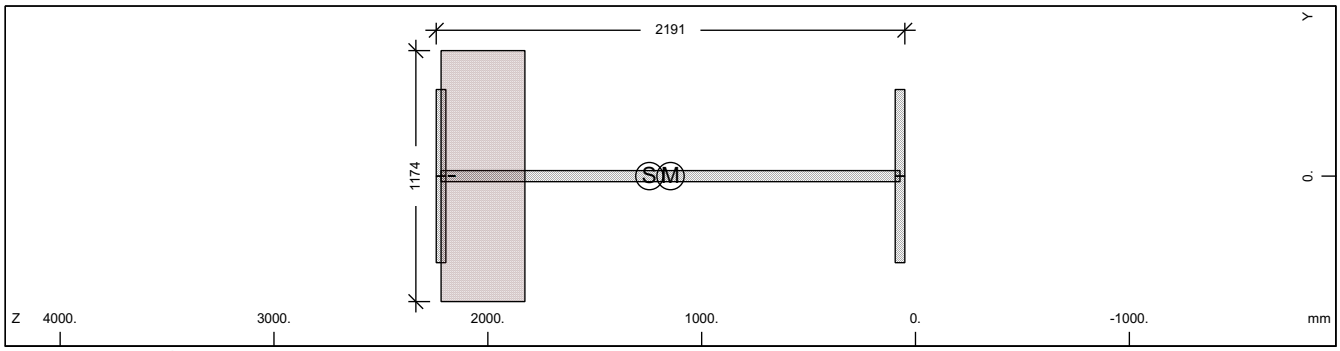

Cross section No. 270

Static properties of cross section

Mat NoR	A[cm2] It[cm4]	Ay/Az/Ayz [cm2]	Iy/Iz/Iyz [cm4]	ys/zs [mm]	modules [N/mm2]	gam [kN/m]
1	2079.54	607.50	14310666.	0.0	210000	26.00
	6270.0	1019.31	398580.9	1244.6	80769	

Additional static properties of cross section

Alfa-T [1/°K]	ymin ymax [mm]	zmin zmax [mm]	hymin hzmin [mm]	AK AB [cm2]	MB	Tau-T Tau-B [1/m3]	Tau-Vy Tau-Vz [1/m2]
1.2E-05	-587.0	-1194.6		3.109E+03		5.479E+00	2.058E+01
	587.0	996.7		4.605E+03		1.255E+02	1.054E+01

Section values for warping

Wmin[cm2]	Wmax[cm2]	CM[cm6]	CMS[cm4]	ASwyy[cm6]	ASwzz[cm6]	ry[mm]	rz[mm]
-4346.10	4346.10	4589934852.	6995784.5	2.83	101.59	0.0	13.1

Partial cross sections

Mat NoR	A[cm2] It[cm4]	Ay/Az/Ayz [cm2]	Iy/Iz/Iyz [cm4]	ys/zs [mm]	modules [N/mm2]	gam [kN/m]
1	1845.04	607.50	12678920.	0.0	210000	14.48
	14980.0	1016.31	398580.9	1145.6	80769	
25	4604.71		590322.9	0.0	10667	11.51
	21155208.	54.40	0.0	2022.6	4444	
210	0.64	0.00	0.0	0.0	200000	0.00
	2.2	0.00	0.0	2168.7	76923	

Design values of cross section

Mat NoR	A[cm2] It[cm4]	Ay/Az/Ayz [cm2]	Iy/Iz/Iyz [cm4]	ys/zs [mm]	modules [N/mm2]	gam [kN/m]
1	2024.96	607.50	13964383.	0.0	182609	26.00
	6270.0	1018.61	398580.9	1223.6	70234	

Design forces and moments
(C/E = characteristic plastic/elastic, D=plast.Design, F=elast. Design)

	N[kN]	Vy[kN]	Vz[kN]	Mt[kNm]	My[kNm]	Mz[kNm]	y[mm]	z[mm]	BUCK
C	61840.9	14118.33	29645.18	5346.05	46300.23	7506.20	4.6	1147.	c c
C	-3414.9				46467.59	0.00	0.0	1245.	COMB
C	-6907.1				0.00	7458.87	0.0	0.0	COMB
C	-75655.0	14118.33	29645.18	5346.05	-48714.1	-7443.09	-4.6	1516.	
C	-10399.2				-57215.8	0.00	0.0	1245.	COMB
C	-6907.1				0.00	-7458.87	0.0	0.0	COMB
E	69664.6	9399.84	18349.45	3011.53	40132.82	3296.90	0.0	1245.	
E	-69664.6	9399.84	18349.45	3011.53	-40132.8	-3296.90	0.0	1245.	
D	53774.7	12276.81	24236.84	3743.83	40261.07	6098.89	3.5	1147.	
D	-2969.5				40406.60	0.00	0.0	1245.	COMB
D	-4604.7				0.00	6074.65	0.0	0.0	COMB
D	-62984.1	12276.81	24236.84	3743.83	-41632.6	-6066.58	-3.5	1447.	
D	-6239.9				-47572.1	0.00	0.0	1245.	COMB
D	-4604.7				0.00	-6074.65	0.0	0.0	COMB

SOFiSTiK AG - www.sofistik.de

Composite bridge 38+50+38, b=14.25m, 2x2HL1100R HISTAR460 , slab 0.30m C30/37

Design forces and moments
(C/E = characteristic plastic/elastic, D=plast.Design, F=elast. Design)

	N[kN]	Vy[kN]	Vz[kN]	Mt[kNm]	My[kNm]	Mz[kNm]	y[mm]	z[mm]	BUCK
F	60577.9	8173.78	15956.05	2007.69	34898.10	2866.87	0.0	1245.	
F	-60577.9	8173.78	15956.05	2007.69	-34898.1	-2866.87	0.0	1245.	

Additional Design Data

M	periphery-O/-I [m2/m]	[m2/m]	deff [mm]	t-min [mm]	t-max [mm]	SMP [o/o]	thet-p [tm2/m]	thet-y [tm2/m]	thet-z [tm2/m]	thet-yz [tm2/m]
	8.321		50.0	32.0	392.2	0.0	1.535	1.503	0.031	
1	7.532		49.0	45.0	52.0	0.0	1.027	0.995	0.031	
25	0.784		1174.0			0.0	0.015	0.015		
**	0.004		32.0			0.0	0.000		0.000	

Cross section No. 270.5 = CS 30 - in-situ conc:C3

Cross section No. 271 - VFT (253)

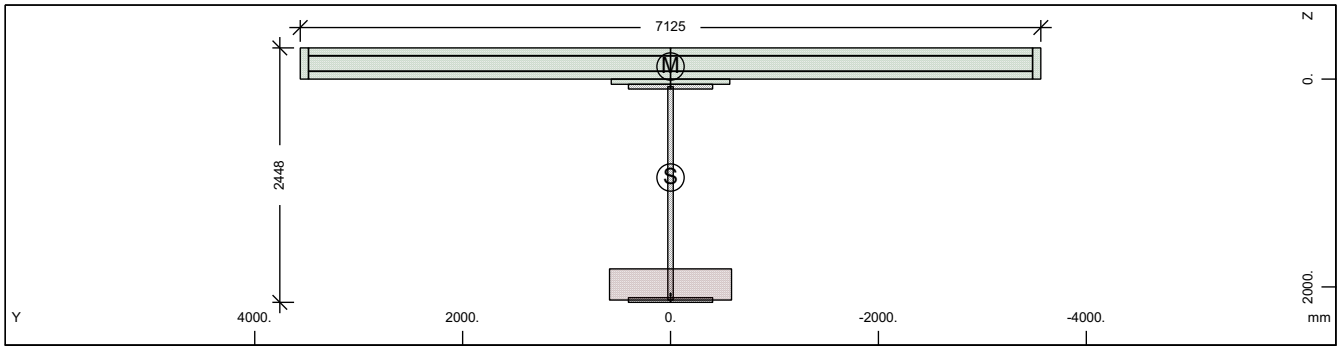

Cross section No. 271 - VFT (253)

Static properties of cross section

Mat NoR	A[cm2] It[cm4]	Ay/Az/Ayz [cm2]	Iy/Iz/Iyz [cm4]	ys/zs [mm]	y/z-sc [mm]	modules [N/mm2]	gam [kN/m]
1	2392.52	363.70	18801361.	0.0	0.0	210000	77.75
	6270.0	681.96	17246455.	947.3	-121.1	80769	

Additional static properties of cross section

Alfa-T [1/°K]	ymin ymax [mm]	zmin zmax [mm]	hymin hzmin [mm]	AK AB [cm2]	MB	Tau-T Tau-B [1/m3]	Tau-Vy Tau-Vz [1/m2]
1.2E-05	-3562.5	-1247.3		2.381E+03		7.153E+00	3.350E+01
	3562.5	1201.0		2.546E+04		1.255E+02	2.068E+01

Section values for warping

Wmin[cm2]	Wmax[cm2]	CM[cm6]	CMS[cm4]	ASwyy[cm6]	ASwzz[cm6]	ry[mm]	rz[mm]
-9100.35	9100.35	1.123E+10	2119369.3	215.85	235.31	0.0	1246.4

Partial cross sections

Mat NoR	A[cm2] It[cm4]	Ay/Az/Ayz [cm2]	Iy/Iz/Iyz [cm4]	ys/zs [mm]	modules [N/mm2]	gam [kN/m]
1	1796.75	0.12	11435919.	0.0	210000	14.10
	14544.8	410.48	398580.9	1099.2	80769	
25	3514.60		262488.9	0.0	10667	8.79
	16146971.	11.58	0.0	1976.2	4444	
210	0.64	0.00	0.0	0.0	200000	0.00
	2.2	0.00	0.0	2075.9	76923	
31	21945.00	17395.56	170028.4	0.0	0	54.86
	6417251.4	12212.49	904880243.	-145.5	0	
300	437.47	381.76	24607.5	0.0	200000	0.00
	14.4	283.85	17690262.	-150.0	76923	

SOFiSTiK AG - www.sofistik.de

Composite bridge 38+50+38, b=14.25m, 2x2HL1100R HISTAR460 , slab 0.30m C30/37

Design values of cross section

Mat NoR	A[cm2] It[cm4]	Ay/Az/Ayz [cm2]	Iy/Iz/Iyz [cm4]	ys/zs [mm]	modules [N/mm2]	gam [kN/m]
1	2350.86	363.70	18349514.	0.0	182609	77.75
	6270.0	681.31	17246454.	929.1	70234	

Design forces and moments
(C/E = characteristic plastic/elastic, D=plast.Design, F=elast. Design)

	N[kN]	Vy[kN]	Vz[kN]	Mt[kNm]	My[kNm]	Mz[kNm]	y[mm]	z[mm]	BUCK
C	82096.7	62956.15	55713.07	102852.8	77804.30	102199.6	27.7	-74.8	c c
C	-82385.9				139819.8	0.00	0.0	947.3	COMB
C	-38189.4				0.00	102405.5	0.0	0.0	COMB
C	-148937.	62956.15	55713.06	102852.8	-78205.8	-101907.	-27.7	775.1	
C	6007.1				-78723.7	0.00	0.0	947.3	COMB
C	-38189.4				0.00	-102406.	0.0	0.0	COMB
E	80149.4	8618.23	13956.60	2306.57	52442.08	25995.84	0.0	947.3	
E	-80149.4	8618.23	13956.60	2306.57	-52442.1	-25995.8	0.0	947.3	
D	71388.4	47397.68	41962.17	68760.93	66545.02	76980.32	19.7	-65.0	
D	-58282.1				106985.1	0.00	0.0	947.3	COMB
D	-25459.6				0.00	77097.07	0.0	0.0	COMB
D	-115949.	47397.68	41962.17	68760.92	-65359.6	-76841.6	-20.1	704.3	
D	7362.9				-66254.3	0.00	0.0	947.3	COMB
D	-25459.6				0.00	-77097.1	0.0	0.0	COMB
F	69695.1	7494.11	12136.17	1537.71	45601.81	22605.08	0.0	947.3	
F	-69695.1	7494.11	12136.17	1537.71	-45601.8	-22605.1	0.0	947.3	

Additional Design Data

M	periphery-O/-I [m2/m]	[m2/m]	deff [mm]	t-min [mm]	t-max [mm]	SMP [o/o]	thet-p [tm2/m]	thet-y [tm2/m]	thet-z [tm2/m]	thet-yz [tm2/m]
	52.344		9.1	3.1	300.0	0.0	28.017	5.364	22.653	
1	7.347		48.9	45.0	52.0	0.0	0.929	0.898	0.031	
25	0.599		1174.0			0.0	0.007	0.007		
**	0.004		32.0			0.0	0.000		0.000	
31	16.530		265.5	50.0	300.0	0.0	22.626	0.004	22.622	
**	27.864		3.1	3.1	3.1	0.0	0.000	0.000	0.000	

Cross section No. 271.1 = CS 1 - steel alone

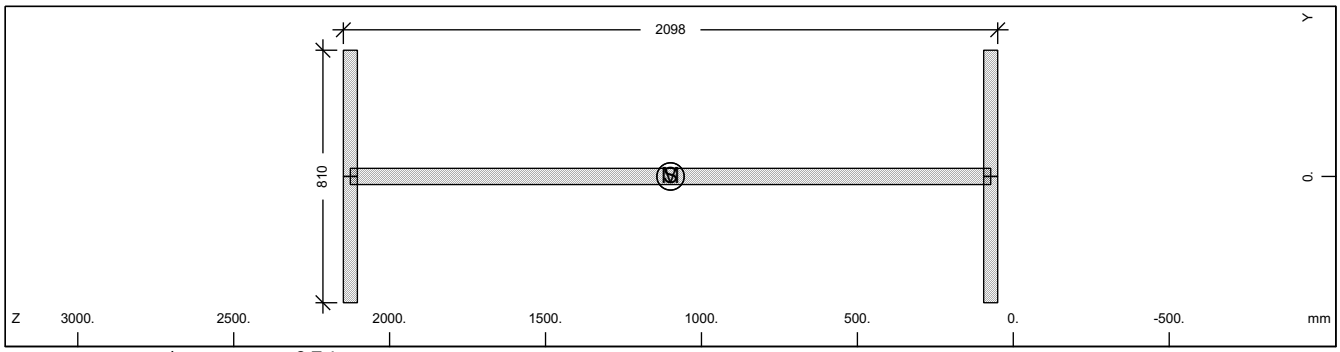

Cross section No. 271

Static properties of cross section

Mat NoR	A[cm2] It[cm4]	Ay/Az/Ayz [cm2]	Iy/Iz/Iyz [cm4]	ys/zs [mm]	modules [N/mm2]	gam [kN/m]
1	1796.75	607.50	11435919.	0.0	210000	14.10
	6270.0	1011.30	398580.9	1099.2	80769	

Additional static properties of cross section

Alfa-T [1/°K]	ymin ymax [mm]	zmin zmax [mm]	hymin hzmin [mm]	AK AB [cm2]	MB	Tau-T Tau-B [1/m3]	Tau-Vy Tau-Vz [1/m2]
1.2E-05	-405.0	-1049.2		1.076E+03		3.575E+02	2.058E+01
	405.0	1049.2				1.255E+02	1.090E+01

SOFiSTiK AG - www.sofistik.de

Composite bridge 38+50+38, b=14.25m, 2x2HL1100R HISTAR460 , slab 0.30m C30/37

Section values for warping

Wmin[cm2]	Wmax[cm2]	CM[cm6]	CMS[cm4]	ASwyy[cm6]	ASwzz[cm6]	ry[mm]	rz[mm]
-4158.07	4158.074	201367980.	6403547.6	5.92	169.83	0.0	0.0

Design values of cross section

Mat NoR	A[cm2] It[cm4]	Ay/Az/Ayz [cm2]	Iy/Iz/Iyz [cm4]	ys/zs [mm]	modules [N/mm2]	gam [kN/m]
1	1796.75	607.50	11435919.	0.0	182609	14.10
	6270.0	1011.30	398580.9	1099.2	70234	

Design forces and moments
(C/E = characteristic plastic/elastic, D=plast.Design, F=elast. Design)

	N[kN]	Vy[kN]	Vz[kN]	Mt[kNm]	My[kNm]	Mz[kNm]	y[mm]	z[mm]	BUCK
C	60191.2	14099.76	20651.65	854.19	43435.30	5410.36	0.0	1099.	c c
C	0.0				0.00	0.00	0.0	0.0	COMB
E	60191.2	9399.84	17741.51	540.99	36514.38	3296.90	0.0	1099.	
D	52340.2	12260.66	17957.96	742.77	37769.82	4704.66	0.0	1099.	
D	0.0				0.00	0.00	0.0	0.0	COMB
F	52340.2	8173.78	15427.40	470.42	31751.64	2866.87	0.0	1099.	

Additional Design Data

M	periphery-O/-I [m2/m]	[m2/m]	deff [mm]	t-min [mm]	t-max [mm]	SMP [o/o]	thet-p [tm2/m]	thet-y [tm2/m]	thet-z [tm2/m]	thet-yz [tm2/m]
	7.347		48.9	45.0	52.0	0.0	0.929	0.898	0.031	

Cross section No. 271.2 = CS 10 - prefab. slab C1

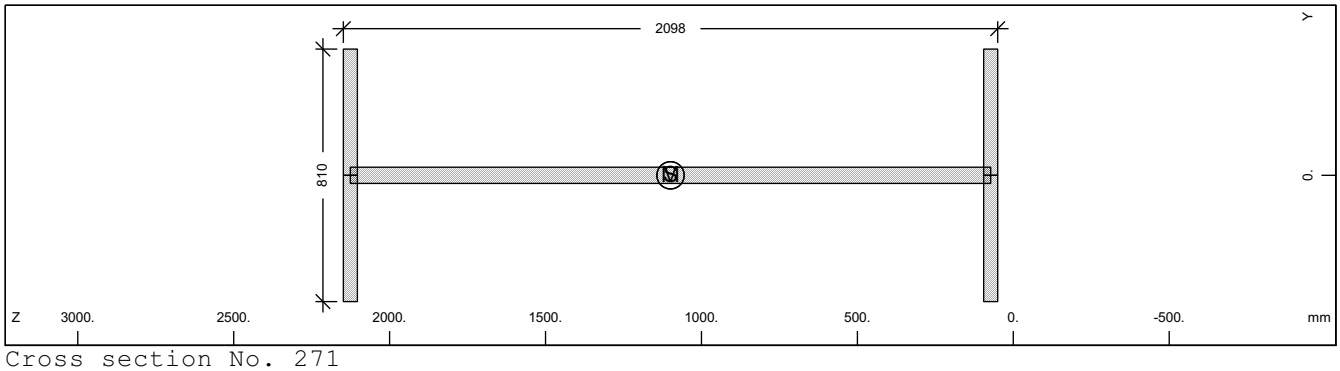

Cross section No. 271

Static properties of cross section

Mat NoR	A[cm2] It[cm4]	Ay/Az/Ayz [cm2]	Iy/Iz/Iyz [cm4]	ys/zs [mm]	modules [N/mm2]	gam [kN/m]
1	1796.75	607.50	11435919.	0.0	210000	14.10
	6270.0	1011.30	398580.9	1099.2	80769	

Additional static properties of cross section

Alfa-T [1/°K]	ymin ymax [mm]	zmin zmax [mm]	hymin hzmin [mm]	AK AB [cm2]	MB	Tau-T Tau-B [1/m3]	Tau-Vy Tau-Vz [1/m2]
1.2E-05	-405.0	-1049.2		1.076E+03		3.575E+02	2.058E+01
	405.0	1049.2				1.255E+02	1.090E+01

Section values for warping

Wmin[cm2]	Wmax[cm2]	CM[cm6]	CMS[cm4]	ASwyy[cm6]	ASwzz[cm6]	ry[mm]	rz[mm]
-4158.07	4158.074	201367980.	6403547.6	5.92	169.83	0.0	0.0

Design values of cross section

Mat NoR	A[cm2] It[cm4]	Ay/Az/Ayz [cm2]	Iy/Iz/Iyz [cm4]	ys/zs [mm]	modules [N/mm2]	gam [kN/m]
1	1796.75	607.50	11435919.	0.0	182609	14.10
	6270.0	1011.30	398580.9	1099.2	70234	

SOFiSTiK AG - www.sofistik.de

Composite bridge 38+50+38, b=14.25m, 2x2HL1100R HISTAR460 , slab 0.30m C30/37

Design forces and moments
(C/E = characteristic plastic/elastic, D=plast.Design, F=elast. Design)

	N[kN]	Vy[kN]	Vz[kN]	Mt[kNm]	My[kNm]	Mz[kNm]	y[mm]	z[mm]	BUCK
C	60191.2	14099.76	20651.65	854.19	43435.30	5410.36	0.0	1099.	c c
C	0.0				0.00	0.00	0.0	0.0	COMB
E	60191.2	9399.84	17741.51	540.99	36514.38	3296.90	0.0	1099.	
D	52340.2	12260.66	17957.96	742.77	37769.82	4704.66	0.0	1099.	
D	0.0				0.00	0.00	0.0	0.0	COMB
F	52340.2	8173.78	15427.40	470.42	31751.64	2866.87	0.0	1099.	

Additional Design Data

M	periphery-O/-I [m2/m]	[m2/m]	deff [mm]	t-min [mm]	t-max [mm]	SMP [o/o]	thet-p [tm2/m]	thet-y [tm2/m]	thet-z [tm2/m]	thet-yz [tm2/m]
	7.347		48.9	45.0	52.0	0.0	0.929	0.898	0.031	

Cross section No. 271.3 = CS 20 - in-situ conc:C2

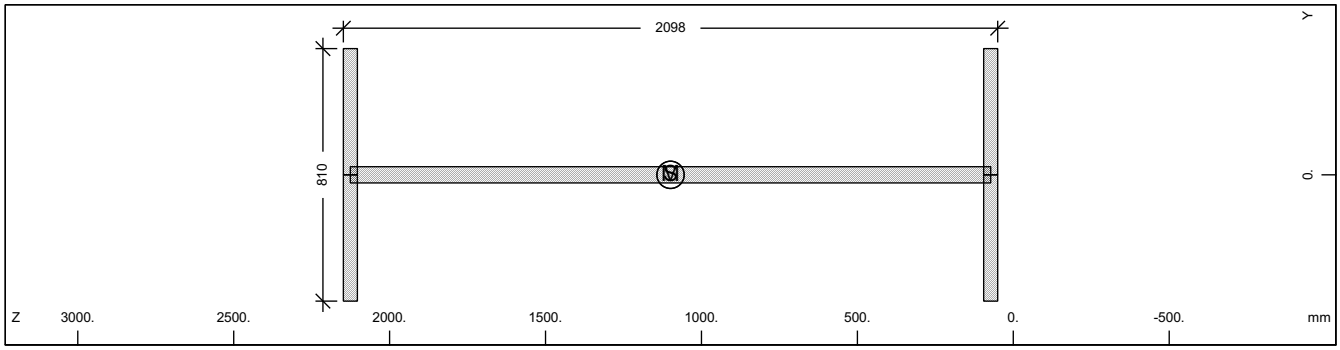

Cross section No. 271

Static properties of cross section

Mat NoR	A[cm2] It[cm4]	Ay/Az/Ayz [cm2]	Iy/Iz/Iyz [cm4]	ys/zs [mm]	modules [N/mm2]	gam [kN/m]
1	1796.75	607.50	11435919.	0.0	210000	14.10
	6270.0	1011.30	398580.9	1099.2	80769	

Additional static properties of cross section

Alfa-T [1/°K]	ymin ymax [mm]	zmin zmax [mm]	hymin hzmin [mm]	AK AB [cm2]	MB	Tau-T Tau-B [1/m3]	Tau-Vy Tau-Vz [1/m2]
1.2E-05	-405.0	-1049.2		1.076E+03		3.575E+02	2.058E+01
	405.0	1049.2				1.255E+02	1.090E+01

Section values for warping

Wmin[cm2]	Wmax[cm2]	CM[cm6]	CMS[cm4]	ASwyy[cm6]	ASwzz[cm6]	ry[mm]	rz[mm]
-4158.07	4158.07	4201367980.	6403547.6	5.92	169.83	0.0	0.0

Design values of cross section

Mat NoR	A[cm2] It[cm4]	Ay/Az/Ayz [cm2]	Iy/Iz/Iyz [cm4]	ys/zs [mm]	modules [N/mm2]	gam [kN/m]
1	1796.75	607.50	11435919.	0.0	182609	14.10
	6270.0	1011.30	398580.9	1099.2	70234	

Design forces and moments
(C/E = characteristic plastic/elastic, D=plast.Design, F=elast. Design)

	N[kN]	Vy[kN]	Vz[kN]	Mt[kNm]	My[kNm]	Mz[kNm]	y[mm]	z[mm]	BUCK
C	60191.2	14099.76	20651.65	854.19	43435.30	5410.36	0.0	1099.	c c
C	0.0				0.00	0.00	0.0	0.0	COMB
E	60191.2	9399.84	17741.51	540.99	36514.38	3296.90	0.0	1099.	
D	52340.2	12260.66	17957.96	742.77	37769.82	4704.66	0.0	1099.	
D	0.0				0.00	0.00	0.0	0.0	COMB
F	52340.2	8173.78	15427.40	470.42	31751.64	2866.87	0.0	1099.	

SOFiSTiK AG - www.sofistik.de

Composite bridge 38+50+38, b=14.25m, 2x2HL1100R HISTAR460 , slab 0.30m C30/37

Additional Design Data

M	periphery-O/-I [m2/m]	[m2/m]	deff [mm]	t-min [mm]	t-max [mm]	SMP [o/o]	thet-p [tm2/m]	thet-y [tm2/m]	thet-z [tm2/m]	thet-yz [tm2/m]
	7.347		48.9	45.0	52.0	0.0	0.929	0.898	0.031	

Cross section No. 271.4 = CS 21 - reinf active:C2

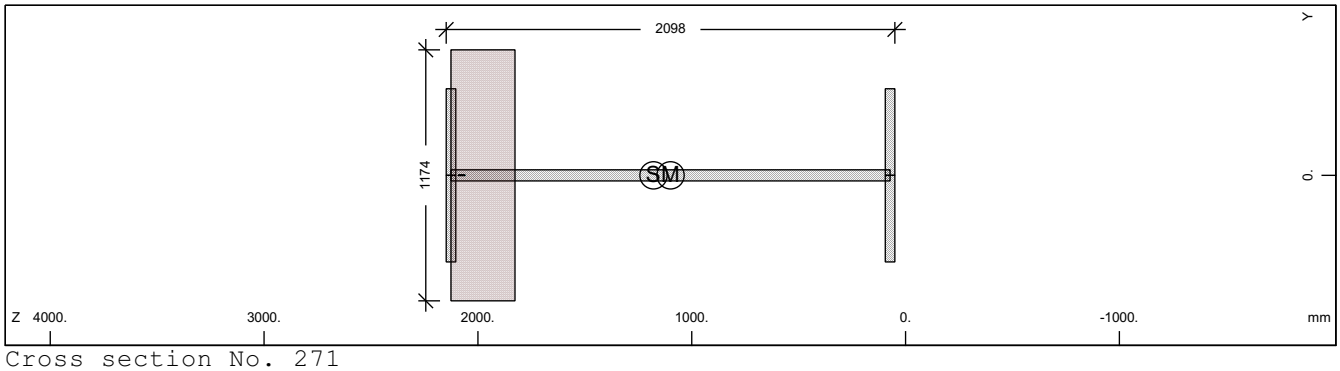

Cross section No. 271

Static properties of cross section

Mat NoR	A[cm2] It[cm4]	Ay/Az/Ayz [cm2]	Iy/Iz/Iyz [cm4]	ys/zs [mm]	modules [N/mm2]	gam [kN/m]
1	1975.88	607.50	12703136.	0.0	210000	22.89
	6270.0	988.10	398580.9	1178.7	80769	

Additional static properties of cross section

Alfa-T [1/°K]	ymin ymax [mm]	zmin zmax [mm]	hymin hzmin [mm]	AK AB [cm2]	MB	Tau-T Tau-B [1/m3]	Tau-Vy Tau-Vz [1/m2]
1.2E-05	-587.0	-1128.7		2.381E+03		7.154E+00	2.058E+01
	587.0	969.6		3.515E+03		1.255E+02	1.092E+01

Section values for warping

Wmin[cm2]	Wmax[cm2]	CM[cm6]	CMS[cm4]	ASwyy[cm6]	ASwzz[cm6]	ry[mm]	rz[mm]
-4158.07	4158.07	4201368446.	6403547.6	-3.18	-101.35	0.0	15.2

Partial cross sections

Mat NoR	A[cm2] It[cm4]	Ay/Az/Ayz [cm2]	Iy/Iz/Iyz [cm4]	ys/zs [mm]	modules [N/mm2]	gam [kN/m]
1	1796.75	607.50	11435919.	0.0	210000	14.10
	14544.8	986.38	398580.9	1099.2	80769	
25	3514.60		262488.9	0.0	10667	8.79
	16146971.	31.31	0.0	1976.2	4444	
210	0.64	0.00	0.0	0.0	200000	0.00
	2.2	0.00	0.0	2075.9	76923	

Design values of cross section

Mat NoR	A[cm2] It[cm4]	Ay/Az/Ayz [cm2]	Iy/Iz/Iyz [cm4]	ys/zs [mm]	modules [N/mm2]	gam [kN/m]
1	1934.23	607.50	12429420.	0.0	182609	22.89
	6270.0	987.70	398580.9	1161.6	70234	

Design forces and moments
(C/E = characteristic plastic/elastic, D=plast.Design, F=elast. Design)

	N[kN]	Vy[kN]	Vz[kN]	Mt[kNm]	My[kNm]	Mz[kNm]	y[mm]	z[mm]	BUCK
C	60223.4	14118.33	26912.62	4265.94	43466.68	6986.73	3.6	1100.	c c
C	-2739.0				43574.35	0.00	0.0	1179.	COMB
C	-5271.9				0.00	6957.92	0.0	0.0	COMB
C	-70767.2	14118.33	26912.62	4265.94	-45032.7	-6948.32	-3.6	1400.	
C	-7804.8				-51982.6	0.00	0.0	1179.	COMB
C	-5271.9				0.00	-6957.92	0.0	0.0	COMB
E	66192.1	9399.84	17710.43	2306.53	37702.32	3296.90	0.0	1179.	
E	-66192.1	9399.84	17710.43	2306.53	-37702.3	-3296.90	0.0	1179.	
D	52368.1	12276.81	22225.65	3018.83	37797.12	5749.23	2.5	1100.	

SOFiSTiK AG - www.sofistik.de

Composite bridge 38+50+38, b=14.25m, 2x2HL1100R HISTAR460 , slab 0.30m C30/37

Design forces and moments
(C/E = characteristic plastic/elastic, D=plast.Design, F=elast. Design)

	N[kN]	Vy[kN]	Vz[kN]	Mt[kNm]	My[kNm]	Mz[kNm]	y[mm]	z[mm]	BUCK
D	-2381.7				37890.74	0.00	0.0	1179.	COMB
D	-3514.6				0.00	5736.42	0.0	0.0	COMB
D	-59397.3	12276.81	22225.65	3018.83	-43139.8	-5731.56	-2.5	1332.	
D	-4647.5				-43496.3	0.00	0.0	1179.	COMB
D	-3514.6				0.00	-5736.42	0.0	0.0	COMB
F	57558.4	8173.78	15400.37	1537.69	32784.63	2866.87	0.0	1179.	
F	-57558.4	8173.78	15400.37	1537.69	-32784.6	-2866.87	0.0	1179.	

Additional Design Data

M	periphery-O/-I [m2/m]	[m2/m]	deff [mm]	t-min [mm]	t-max [mm]	SMP [o/o]	thet-p [tm2/m]	thet-y [tm2/m]	thet-z [tm2/m]	thet-yz [tm2/m]
	7.949		49.7	32.0	299.4	0.0	1.352	1.321	0.031	
1	7.347		48.9	45.0	52.0	0.0	0.929	0.898	0.031	
25	0.599		1174.0			0.0	0.007	0.007		
**	0.004		32.0			0.0	0.000		0.000	

Cross section No. 271.5 = CS 30 - in-situ conc:C3

Cross section No. 272 - VFT (253)

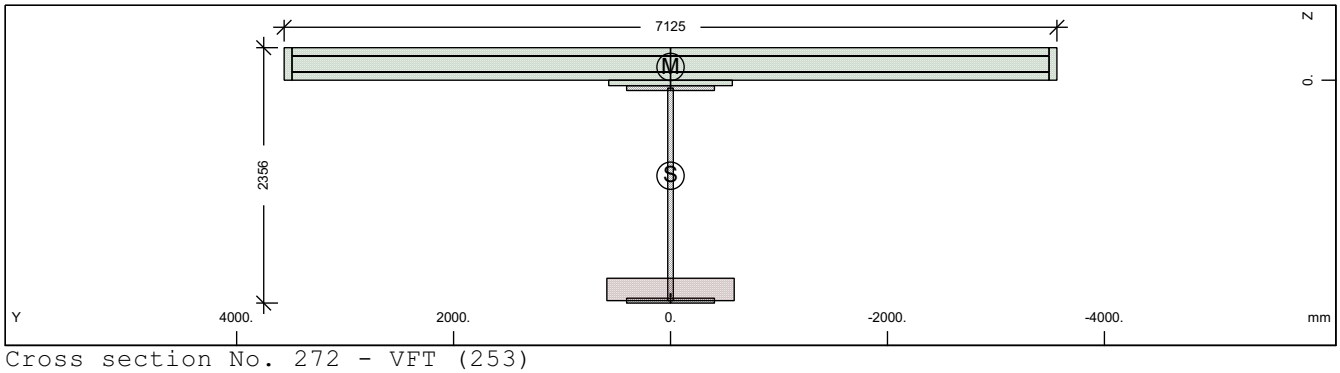

Cross section No. 272 - VFT (253)

Static properties of cross section

Mat NoR	A[cm2] It[cm4]	Ay/Az/Ayz [cm2]	Iy/Iz/Iyz [cm4]	ys/zs [mm]	y/z-sc [mm]	modules [N/mm2]	gam [kN/m]
1	2289.71	364.34	16613637.	0.0	0.0	210000	74.65
	6270.0	636.32	17349038.	880.9	-122.4	80769	

Additional static properties of cross section

Alfa-T [1/°K]	ymin ymax [mm]	zmin zmax [mm]	hymin hzmin [mm]	AK AB [cm2]	MB	Tau-T Tau-B [1/m3]	Tau-Vy Tau-Vz [1/m2]
1.2E-05	-3562.5	-1180.9		1.654E+03		1.030E+01	3.343E+01
	3562.5	1174.6		2.437E+04		1.255E+02	2.213E+01

Section values for warping

Wmin[cm2]	Wmax[cm2]	CM[cm6]	CMS[cm4]	ASwyy[cm6]	ASwzz[cm6]	ry[mm]	rz[mm]
-8729.30	8729.30	1.042E+10	1842796.3	216.10	206.94	0.0	1090.1

Partial cross sections

Mat NoR	A[cm2] It[cm4]	Ay/Az/Ayz [cm2]	Iy/Iz/Iyz [cm4]	ys/zs [mm]	modules [N/mm2]	gam [kN/m]
1	1748.47	0.12	10270380.	0.0	210000	13.73
	14109.6	367.77	398580.9	1052.8	80769	
25	2424.50		86168.4	0.0	10667	6.06
	11138760.	4.51	0.0	1929.8	4444	
210	0.64	0.00	0.0	0.0	200000	0.00
	2.2	0.00	0.0	1983.0	76923	
31	21945.00	17250.62	170028.4	0.0	0	54.86
	6417251.4	12017.52	904880243.	-145.5	0	

SOFiSTiK AG - www.sofistik.de

Composite bridge 38+50+38, b=14.25m, 2x2HL1100R HISTAR460 , slab 0.30m C30/37

300	438.35	382.43	24657.3	0.0	200000	0.00
	14.4	281.19	17797975.	-150.0	76923	

Design values of cross section

Mat	A[cm2]	Ay/Az/Ayz	Iy/Iz/Iyz	ys/zs	modules	gam
NoR	It[cm4]	[cm2]	[cm4]	[mm]	[N/mm2]	[kN/m]
1	2260.97	364.34	16292472.	0.0	182609	74.65
	6270.0	635.76	17349036.	867.5	70234	

Design forces and moments
(C/E = characteristic plastic/elastic, D=plast.Design, F=elast. Design)

	N[kN]	Vy[kN]	Vz[kN]	Mt[kNm]	My[kNm]	Mz[kNm]	y[mm]	z[mm]	BUCK
C	80523.5	62981.73	52980.53	101772.7	73302.41	101788.1	28.5	-128.	c c
C	-81732.2				131391.5	0.00	0.0	880.9	COMB
C	-36554.3				0.00	102059.0	0.0	0.0	COMB
C	-144940.	62981.73	52980.53	101772.7	-70384.6	-101581.	-28.5	633.5	
C	8623.7				-71451.9	0.00	0.0	880.9	COMB
C	-36554.3				0.00	-102059.	0.0	0.0	COMB
E	76705.2	8634.47	13047.34	1601.58	47381.14	26097.60	0.0	880.9	
E	-76705.2	8634.47	13047.34	1601.58	-47381.1	-26097.6	0.0	880.9	
D	70020.4	47419.92	39951.00	68035.98	62535.23	76745.81	20.1	-73.5	
D	-57713.7				100543.9	0.00	0.0	880.9	COMB
D	-24369.5				0.00	76893.16	0.0	0.0	COMB
D	-112965.	47419.92	39951.00	68035.98	-59254.8	-76648.4	-20.1	584.7	
D	8974.7				-60584.1	0.00	0.0	880.9	COMB
D	-24369.5				0.00	-76893.2	0.0	0.0	COMB
F	66700.2	7508.24	11345.51	1067.72	41201.00	22693.57	0.0	880.9	
F	-66700.2	7508.24	11345.51	1067.72	-41201.0	-22693.6	0.0	880.9	

Additional Design Data

M	periphery-O/-I [m2/m]	[m2/m]	deff [mm]	t-min [mm]	t-max [mm]	SMP [o/o]	thet-p [tm2/m]	thet-y [tm2/m]	thet-z [tm2/m]	thet-yz [tm2/m]
	52.029		8.8	3.1	300.0	0.0	26.918	4.265	22.653	
1	7.161		48.8	45.0	52.0	0.0	0.838	0.806	0.031	
25	0.413		1174.0			0.0	0.002	0.002		
**	0.004		32.0			0.0	0.000		0.000	
31	16.530		265.5	50.0	300.0	0.0	22.626	0.004	22.622	
**	27.921		3.1	3.1	3.1	0.0	0.000	0.000	0.000	

Cross section No. 272.1 = CS 1 - steel alone

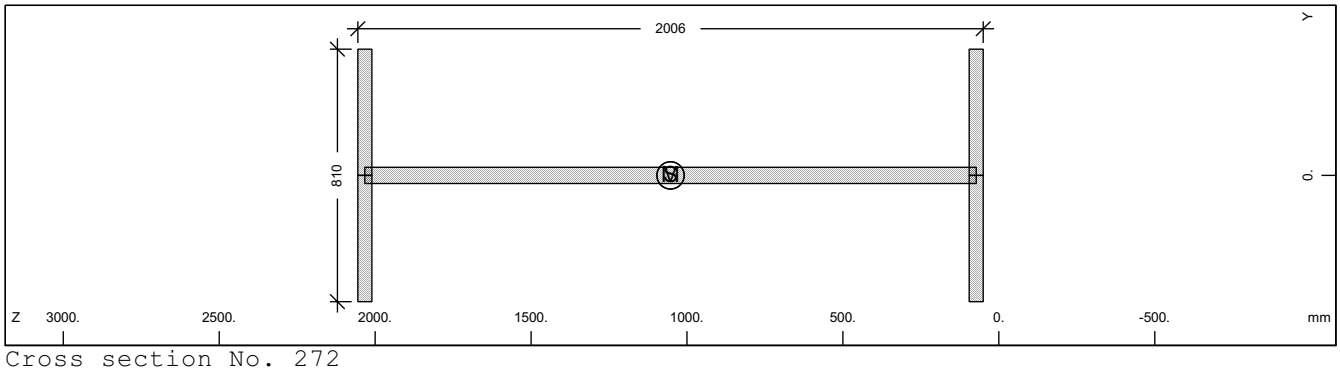

Cross section No. 272

Static properties of cross section

Mat	A[cm2]	Ay/Az/Ayz	Iy/Iz/Iyz	ys/zs	modules	gam
NoR	It[cm4]	[cm2]	[cm4]	[mm]	[N/mm2]	[kN/m]
1	1748.47	607.50	10270380.	0.0	210000	13.73
	6270.0	964.28	398580.9	1052.8	80769	

SOFiSTiK AG - www.sofistik.de

Composite bridge 38+50+38, b=14.25m, 2x2HL1100R HISTAR460 , slab 0.30m C30/37

Additional static properties of cross section

Alfa-T	ymin ymax	zmin zmax	hymin hzmin	AK AB	MB	Tau-T Tau-B	Tau-Vy Tau-Vz
[1/°K]	[mm]	[mm]	[mm]	[cm2]		[1/m3]	[1/m2]
1.2E-05	-405.0	-1002.8		1.044E+03		3.685E+02	2.058E+01
	405.0	1002.8				1.255E+02	1.137E+01

Section values for warping

Wmin[cm2]	Wmax[cm2]	CM[cm6]	CMS[cm4]	ASwyy[cm6]	ASwzz[cm6]	ry[mm]	rz[mm]
-3970.05	3970.05	3829986105.	5837502.7	0.48	12.37	0.0	0.0

Design values of cross section

Mat NoR	A[cm2] It[cm4]	Ay/Az/Ayz [cm2]	Iy/Iz/Iyz [cm4]	ys/zs [mm]	modules [N/mm2]	gam [kN/m]
1	1748.47	607.50	10270380.	0.0	182609	13.73
	6270.0	964.28	398580.9	1052.8	70234	

Design forces and moments
(C/E = characteristic plastic/elastic, D=plast.Design, F=elast. Design)

	N[kN]	Vy[kN]	Vz[kN]	Mt[kNm]	My[kNm]	Mz[kNm]	y[mm]	z[mm]	BUCK
C	58573.7	14099.76	19717.78	829.91	40678.35	5389.33	0.0	1053.	c c
C	0.0				0.00	0.00	0.0	0.0	COMB
E	58573.7	9399.84	17013.18	524.80	34311.14	3296.90	0.0	1053.	
D	50933.6	12260.66	17145.89	721.66	35372.48	4686.38	0.0	1053.	
D	0.0				0.00	0.00	0.0	0.0	COMB
F	50933.6	8173.78	14794.07	456.35	29835.77	2866.87	0.0	1053.	

Additional Design Data

M	periphery-O/-I [m2/m]	[m2/m]	deff [mm]	t-min [mm]	t-max [mm]	SMP [o/o]	thet-p [tm2/m]	thet-y [tm2/m]	thet-z [tm2/m]	thet-yz [tm2/m]
	7.161		48.8	45.0	52.0	0.0	0.838	0.806	0.031	

Cross section No. 272.2 = CS 10 - prefab. slab C1

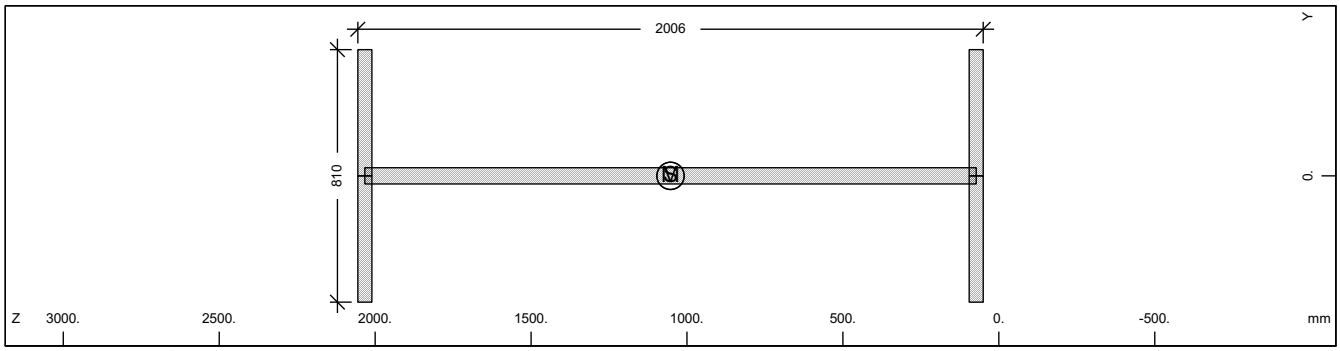

Cross section No. 272

Static properties of cross section

Mat NoR	A[cm2] It[cm4]	Ay/Az/Ayz [cm2]	Iy/Iz/Iyz [cm4]	ys/zs [mm]	modules [N/mm2]	gam [kN/m]
1	1748.47	607.50	10270380.	0.0	210000	13.73
	6270.0	964.28	398580.9	1052.8	80769	

Additional static properties of cross section

Alfa-T	ymin ymax	zmin zmax	hymin hzmin	AK AB	MB	Tau-T Tau-B	Tau-Vy Tau-Vz
[1/°K]	[mm]	[mm]	[mm]	[cm2]		[1/m3]	[1/m2]
1.2E-05	-405.0	-1002.8		1.044E+03		3.685E+02	2.058E+01
	405.0	1002.8				1.255E+02	1.137E+01

Section values for warping

Wmin[cm2]	Wmax[cm2]	CM[cm6]	CMS[cm4]	ASwyy[cm6]	ASwzz[cm6]	ry[mm]	rz[mm]
-3970.05	3970.05	3829986105.	5837502.7	0.48	12.37	0.0	0.0

SOFiSTiK AG - www.sofistik.de

Composite bridge 38+50+38, b=14.25m, 2x2HL1100R HISTAR460 , slab 0.30m C30/37

Design values of cross section

Mat NoR	A[cm2] It[cm4]	Ay/Az/Ayz [cm2]	Iy/Iz/Iyz [cm4]	ys/zs [mm]	modules [N/mm2]	gam [kN/m]
1	1748.47	607.50	10270380.	0.0	182609	13.73
	6270.0	964.28	398580.9	1052.8	70234	

Design forces and moments
(C/E = characteristic plastic/elastic, D=plast.Design, F=elast. Design)

	N[kN]	Vy[kN]	Vz[kN]	Mt[kNm]	My[kNm]	Mz[kNm]	y[mm]	z[mm]	BUCK
C	58573.7	14099.76	19717.78	829.91	40678.35	5389.33	0.0	1053.	c c
C	0.0				0.00	0.00	0.0	0.0	COMB
E	58573.7	9399.84	17013.18	524.80	34311.14	3296.90	0.0	1053.	
D	50933.6	12260.66	17145.89	721.66	35372.48	4686.38	0.0	1053.	
D	0.0				0.00	0.00	0.0	0.0	COMB
F	50933.6	8173.78	14794.07	456.35	29835.77	2866.87	0.0	1053.	

Additional Design Data

M	periphery-O/-I [m2/m] [m2/m]	deff [mm]	t-min [mm]	t-max [mm]	SMP [o/o]	thet-p [tm2/m]	thet-y [tm2/m]	thet-z [tm2/m]	thet-yz [tm2/m]
	7.161	48.8	45.0	52.0	0.0	0.838	0.806	0.031	

Cross section No. 272.3 = CS 20 - in-situ conc:C2

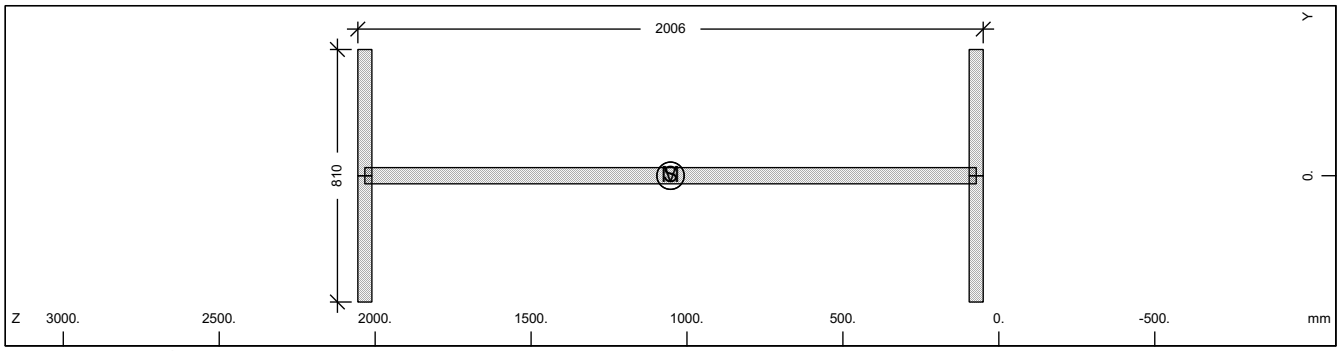

Cross section No. 272

Static properties of cross section

Mat NoR	A[cm2] It[cm4]	Ay/Az/Ayz [cm2]	Iy/Iz/Iyz [cm4]	ys/zs [mm]	modules [N/mm2]	gam [kN/m]
1	1748.47	607.50	10270380.	0.0	210000	13.73
	6270.0	964.28	398580.9	1052.8	80769	

Additional static properties of cross section

Alfa-T [1/°K]	ymin ymax [mm]	zmin zmax [mm]	hymin hzmin [mm]	AK AB [cm2]	MB	Tau-T Tau-B [1/m3]	Tau-Vy Tau-Vz [1/m2]
1.2E-05	-405.0	-1002.8		1.044E+03		3.685E+02	2.058E+01
	405.0	1002.8				1.255E+02	1.137E+01

Section values for warping

Wmin[cm2]	Wmax[cm2]	CM[cm6]	CMS[cm4]	ASwyy[cm6]	ASwzz[cm6]	ry[mm]	rz[mm]
-3970.05	3970.053829986105.		5837502.7	0.48	12.37	0.0	0.0

Design values of cross section

Mat NoR	A[cm2] It[cm4]	Ay/Az/Ayz [cm2]	Iy/Iz/Iyz [cm4]	ys/zs [mm]	modules [N/mm2]	gam [kN/m]
1	1748.47	607.50	10270380.	0.0	182609	13.73
	6270.0	964.28	398580.9	1052.8	70234	

Design forces and moments
(C/E = characteristic plastic/elastic, D=plast.Design, F=elast. Design)

	N[kN]	Vy[kN]	Vz[kN]	Mt[kNm]	My[kNm]	Mz[kNm]	y[mm]	z[mm]	BUCK
C	58573.7	14099.76	19717.78	829.91	40678.35	5389.33	0.0	1053.	c c
C	0.0				0.00	0.00	0.0	0.0	COMB
E	58573.7	9399.84	17013.18	524.80	34311.14	3296.90	0.0	1053.	

SOFiSTiK AG - www.sofistik.de

Composite bridge 38+50+38, b=14.25m, 2x2HL1100R HISTAR460 , slab 0.30m C30/37

Design forces and moments
(C/E = characteristic plastic/elastic, D=plast.Design, F=elast. Design)

	N[kN]	Vy[kN]	Vz[kN]	Mt[kNm]	My[kNm]	Mz[kNm]	y[mm]	z[mm]	BUCK
D	50933.6	12260.66	17145.89	721.66	35372.48	4686.38	0.0	1053.	
D	0.0				0.00	0.00	0.0	0.0	COMB
F	50933.6	8173.78	14794.07	456.35	29835.77	2866.87	0.0	1053.	

Additional Design Data

M	periphery-O/-I [m2/m]	[m2/m]	deff [mm]	t-min [mm]	t-max [mm]	SMP [o/o]	thet-p [tm2/m]	thet-y [tm2/m]	thet-z [tm2/m]	thet-yz [tm2/m]
	7.161		48.8	45.0	52.0	0.0	0.838	0.806	0.031	

Cross section No. 272.4 = CS 21 - reinf active:C2

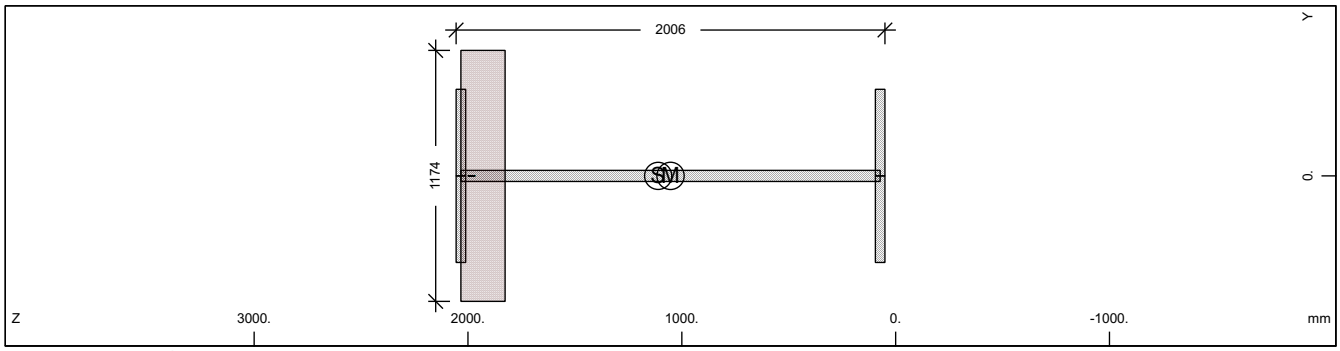

Cross section No. 272

Static properties of cross section

Mat NoR	A[cm2] It[cm4]	Ay/Az/Ayz [cm2]	Iy/Iz/Iyz [cm4]	ys/zs [mm]	modules [N/mm2]	gam [kN/m]
1	1872.23	607.50	11164271.	0.0	210000	19.79
	6270.0	954.31	398580.9	1110.7	80769	

Additional static properties of cross section

Alfa-T [1/°K]	ymin ymax [mm]	zmin zmax [mm]	hymin hzmin [mm]	AK AB [cm2]	MB	Tau-T Tau-B [1/m3]	Tau-Vy Tau-Vz [1/m2]
1.2E-05	-587.0	-1060.7		1.654E+03		1.030E+01	2.058E+01
	587.0	944.8		2.424E+03		1.255E+02	1.135E+01

Section values for warping

Wmin[cm2]	Wmax[cm2]	CM[cm6]	CMS[cm4]	ASwyy[cm6]	ASwzz[cm6]	ry[mm]	rz[mm]
-3970.05	3970.053829986105.		5837502.7	-0.34	-9.56	0.0	15.5

Partial cross sections

Mat NoR	A[cm2] It[cm4]	Ay/Az/Ayz [cm2]	Iy/Iz/Iyz [cm4]	ys/zs [mm]	modules [N/mm2]	gam [kN/m]
1	1748.47	607.50	10270380.	0.0	210000	13.73
	14109.6	953.57	398580.9	1052.8	80769	
25	2424.50		86168.4	0.0	10667	6.06
	11138760.	13.51	0.0	1929.8	4444	
210	0.64	0.00	0.0	0.0	200000	0.00
	2.2	0.00	0.0	1983.0	76923	

Design values of cross section

Mat NoR	A[cm2] It[cm4]	Ay/Az/Ayz [cm2]	Iy/Iz/Iyz [cm4]	ys/zs [mm]	modules [N/mm2]	gam [kN/m]
1	1843.50	607.50	10967499.	0.0	182609	19.79
	6270.0	954.14	398580.9	1098.0	70234	

Design forces and moments
(C/E = characteristic plastic/elastic, D=plast.Design, F=elast. Design)

	N[kN]	Vy[kN]	Vz[kN]	Mt[kNm]	My[kNm]	Mz[kNm]	y[mm]	z[mm]	BUCK
C	58605.8	14118.33	24180.08	3185.84	40708.25	6468.52	2.2	1054.	c c
C	-1988.2				40764.98	0.00	0.0	1111.	COMB

SOFiSTiK AG - www.sofistik.de

Composite bridge 38+50+38, b=14.25m, 2x2HL1100R HISTAR460 , slab 0.30m C30/37

Design forces and moments
(C/E = characteristic plastic/elastic, D=plast.Design, F=elast. Design)

	N[kN]	Vy[kN]	Vz[kN]	Mt[kNm]	My[kNm]	Mz[kNm]	y[mm]	z[mm]	BUCK
C	-3636.7				0.00	6456.98	0.0	0.0	COMB
C	-65879.3	14118.33	24180.08	3185.84	-46321.2	-6452.30	-2.2	1262.	
C	-5285.3				-46722.0	0.00	0.0	1111.	COMB
C	-3636.7				0.00	-6456.98	0.0	0.0	COMB
E	62719.7	9399.84	17046.02	1601.54	35258.41	3296.90	0.0	1111.	
E	-62719.7	9399.84	17046.02	1601.54	-35258.4	-3296.90	0.0	1111.	
D	50961.6	12276.81	20214.48	2293.84	35398.48	5405.53	2.0	1054.	
D	-1728.9				35447.81	0.00	0.0	1111.	COMB
D	-2424.5				0.00	5398.19	0.0	0.0	COMB
D	-55810.6	12276.81	20214.48	2293.84	-39258.5	-5395.74	-2.0	1214.	
D	-3120.1				-39419.2	0.00	0.0	1111.	COMB
D	-2424.5				0.00	-5398.19	0.0	0.0	COMB
F	54538.9	8173.78	14822.62	1067.69	30659.49	2866.87	0.0	1111.	
F	-54538.9	8173.78	14822.62	1067.69	-30659.5	-2866.87	0.0	1111.	

Additional Design Data

M	periphery-O/-I [m2/m]	[m2/m]	deff [mm]	t-min [mm]	t-max [mm]	SMP [o/o]	thet-p [tm2/m]	thet-y [tm2/m]	thet-z [tm2/m]	thet-yz [tm2/m]
	7.578		49.4	32.0	206.5	0.0	1.163	1.132	0.031	
1	7.161		48.8	45.0	52.0	0.0	0.838	0.806	0.031	
25	0.413		1174.0			0.0	0.002	0.002		
**	0.004		32.0			0.0	0.000		0.000	

Cross section No. 272.5 = CS 30 - in-situ conc:C3

Cross section No. 273 - VFT (253)

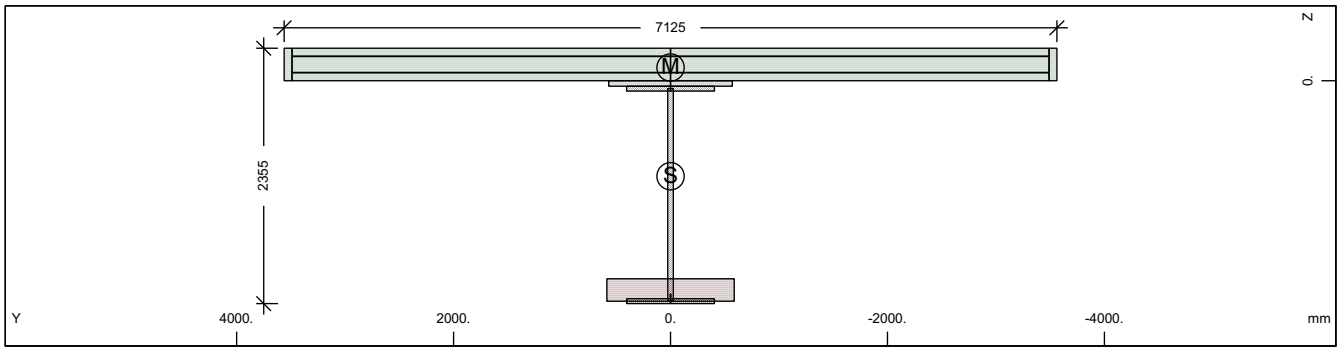

Cross section No. 273 - VFT (253)

Static properties of cross section

Mat NoR	A[cm2] It[cm4]	Ay/Az/Ayz [cm2]	Iy/Iz/Iyz [cm4]	ys/zs [mm]	y/z-sc [mm]	modules [N/mm2]	gam [kN/m]
1	2289.68	364.34	16613090.	0.0	0.0	210000	74.65
	6270.0	636.31	17349061.	880.9	-122.4	80769	

Additional static properties of cross section

Alfa-T [1/°K]	ymin ymax [mm]	zmin zmax [mm]	hymin hzmin [mm]	AK AB [cm2]	MB	Tau-T Tau-B [1/m3]	Tau-Vy Tau-Vz [1/m2]
1.2E-05	-3562.5	-1180.9		1.653E+03		1.030E+01	3.343E+01
	3562.5	1174.6		2.437E+04		1.255E+02	2.213E+01

Section values for warping

Wmin[cm2]	Wmax[cm2]	CM[cm6]	CMS[cm4]	ASwyy[cm6]	ASwzz[cm6]	ry[mm]	rz[mm]
-8729.21	8729.21	1.042E+10	1842730.3	103.40	99.02	0.0	1090.1

SOFiSTiK AG - www.sofistik.de

Composite bridge 38+50+38, b=14.25m, 2x2HL1100R HISTAR460 , slab 0.30m C30/37

Partial cross sections

Mat NoR	A[cm2] It[cm4]	Ay/Az/Ayz [cm2]	Iy/Iz/Iyz [cm4]	ys/zs [mm]	modules [N/mm2]	gam [kN/m]
1	1748.46	0.12	10270093.	0.0	210000	13.73
	14109.4	367.76	398580.9	1052.7	80769	
25	2424.22		86138.9	0.0	10667	6.06
	11137486.	4.51	0.0	1929.7	4444	
210	0.64	0.00	0.0	0.0	200000	0.00
	2.2	0.00	0.0	1983.0	76923	
31	21945.00	17250.59	170028.4	0.0	0	54.86
	6417251.4	12017.46	904880243.	-145.5	0	
300	438.35	382.43	24657.4	0.0	200000	0.00
	14.4	281.19	17798001.	-150.0	76923	

Design values of cross section

Mat NoR	A[cm2] It[cm4]	Ay/Az/Ayz [cm2]	Iy/Iz/Iyz [cm4]	ys/zs [mm]	modules [N/mm2]	gam [kN/m]
1	2260.95	364.34	16291960.	0.0	182609	74.65
	6270.0	635.75	17349061.	867.5	70234	

Design forces and moments
(C/E = characteristic plastic/elastic, D=plast.Design, F=elast. Design)

	N[kN]	Vy[kN]	Vz[kN]	Mt[kNm]	My[kNm]	Mz[kNm]	y[mm]	z[mm]	BUCK
C	80523.1	62981.73	52979.83	101772.5	73301.24	101788.0	28.5	-128.	c c
C	-81732.0				131389.3	0.00	0.0	880.9	COMB
C	-36553.8				0.00	102058.9	0.0	0.0	COMB
C	-144939.	62981.73	52979.83	101772.5	-70382.6	-101581.	-28.5	633.5	
C	8624.3				-71450.0	0.00	0.0	880.9	COMB
C	-36553.8				0.00	-102059.	0.0	0.0	COMB
E	76704.4	8634.48	13047.11	1601.40	47379.85	26097.63	0.0	880.9	
E	-76704.4	8634.48	13047.11	1601.40	-47379.9	-26097.6	0.0	880.9	
D	70020.1	47419.92	39950.48	68035.79	62534.23	76745.73	20.1	-73.5	
D	-57713.5				100542.2	0.00	0.0	880.9	COMB
D	-24369.2				0.00	76893.11	0.0	0.0	COMB
D	-112964.	47419.92	39950.48	68035.80	-59253.3	-76648.3	-20.1	584.6	
D	8975.0				-60582.7	0.00	0.0	880.9	COMB
D	-24369.2				0.00	-76893.1	0.0	0.0	COMB
F	66699.5	7508.24	11345.31	1067.60	41199.87	22693.59	0.0	880.9	
F	-66699.5	7508.24	11345.31	1067.60	-41199.9	-22693.6	0.0	880.9	

Additional Design Data

M	periphery-O/-I [m2/m]	[m2/m]	deff [mm]	t-min [mm]	t-max [mm]	SMP [o/o]	thet-p [tm2/m]	thet-y [tm2/m]	thet-z [tm2/m]	thet-yz [tm2/m]
	52.029		8.8	3.1	300.0	0.0	26.918	4.265	22.653	
1	7.161		48.8	45.0	52.0	0.0	0.837	0.806	0.031	
25	0.413		1174.0			0.0	0.002	0.002		
**	0.004		32.0			0.0	0.000	0.000	0.000	
31	16.530		265.5	50.0	300.0	0.0	22.626	0.004	22.622	
**	27.921		3.1	3.1	3.1	0.0	0.000	0.000	0.000	

SOFiSTiK AG - www.sofistik.de

Composite bridge 38+50+38, b=14.25m, 2x2HL1100R HISTAR460 , slab 0.30m C30/37

Cross section No. 273.1 = CS 1 - steel alone

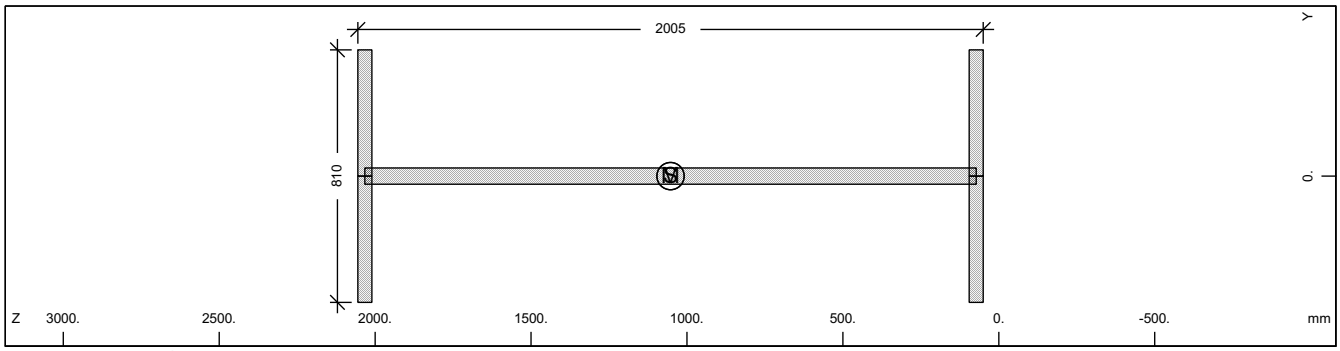

Cross section No. 273

Static properties of cross section

Mat NoR	A[cm2] It[cm4]	Ay/Az/Ayz [cm2]	Iy/Iz/Iyz [cm4]	ys/zs [mm]	modules [N/mm2]	gam [kN/m]
1	1748.46	607.50	10270093.	0.0	210000	13.73
	6270.0	964.27	398580.9	1052.7	80769	

Additional static properties of cross section

Alfa-T [1/°K]	ymin ymax [mm]	zmin zmax [mm]	hymin hzmin [mm]	AK AB [cm2]	MB	Tau-T Tau-B [1/m3]	Tau-Vy Tau-Vz [1/m2]
1.2E-05	-405.0	-1002.7		1.044E+03		3.685E+02	2.058E+01
	405.0	1002.7				1.255E+02	1.137E+01

Section values for warping

Wmin[cm2]	Wmax[cm2]	CM[cm6]	CMS[cm4]	ASwyy[cm6]	ASwzz[cm6]	ry[mm]	rz[mm]
-3970.00	3970.00	3829894137.	5837362.7	-1.23	-31.68	0.0	0.0

Design values of cross section

Mat NoR	A[cm2] It[cm4]	Ay/Az/Ayz [cm2]	Iy/Iz/Iyz [cm4]	ys/zs [mm]	modules [N/mm2]	gam [kN/m]
1	1748.46	607.50	10270093.	0.0	182609	13.73
	6270.0	964.27	398580.9	1052.7	70234	

Design forces and moments
(C/E = characteristic plastic/elastic, D=plast.Design, F=elast. Design)

	N[kN]	Vy[kN]	Vz[kN]	Mt[kNm]	My[kNm]	Mz[kNm]	y[mm]	z[mm]	BUCK
C	58573.3	14099.76	19717.54	829.90	40677.66	5389.33	0.0	1053.	c c
C	0.0				0.00	0.00	0.0	0.0	COMB
E	58573.3	9399.84	17012.99	524.80	34310.59	3296.90	0.0	1053.	
D	50933.3	12260.66	17145.69	721.65	35371.88	4686.37	0.0	1053.	
D	0.0				0.00	0.00	0.0	0.0	COMB
F	50933.3	8173.78	14793.91	456.34	29835.29	2866.87	0.0	1053.	

Additional Design Data

M	periphery-O/-I [m2/m] [m2/m]	deff [mm]	t-min [mm]	t-max [mm]	SMP [o/o]	thet-p [tm2/m]	thet-y [tm2/m]	thet-z [tm2/m]	thet-yz [tm2/m]
	7.161	48.8	45.0	52.0	0.0	0.837	0.806	0.031	

SOFiSTiK AG - www.sofistik.de

Composite bridge 38+50+38, b=14.25m, 2x2HL1100R HISTAR460 , slab 0.30m C30/37

Cross section No. 273.2 = CS 10 - prefab. slab C1

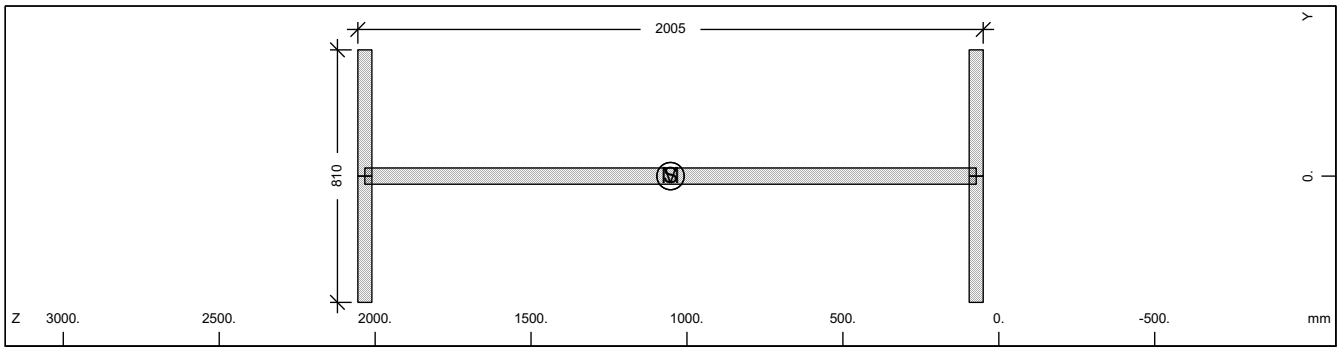

Cross section No. 273

Static properties of cross section

Mat NoR	A[cm2] It[cm4]	Ay/Az/Ayz [cm2]	Iy/Iz/Iyz [cm4]	ys/zs [mm]	modules [N/mm2]	gam [kN/m]
1	1748.46	607.50	10270093.	0.0	210000	13.73
	6270.0	964.27	398580.9	1052.7	80769	

Additional static properties of cross section

Alfa-T [1/°K]	ymin ymax [mm]	zmin zmax [mm]	hymin hzmin [mm]	AK AB [cm2]	MB	Tau-T Tau-B [1/m3]	Tau-Vy Tau-Vz [1/m2]
1.2E-05	-405.0	-1002.7		1.044E+03		3.685E+02	2.058E+01
	405.0	1002.7				1.255E+02	1.137E+01

Section values for warping

Wmin[cm2]	Wmax[cm2]	CM[cm6]	CMS[cm4]	ASwyy[cm6]	ASwzz[cm6]	ry[mm]	rz[mm]
-3970.00	3970.00	3829894137.	5837362.7	-1.23	-31.68	0.0	0.0

Design values of cross section

Mat NoR	A[cm2] It[cm4]	Ay/Az/Ayz [cm2]	Iy/Iz/Iyz [cm4]	ys/zs [mm]	modules [N/mm2]	gam [kN/m]
1	1748.46	607.50	10270093.	0.0	182609	13.73
	6270.0	964.27	398580.9	1052.7	70234	

Design forces and moments
(C/E = characteristic plastic/elastic, D=plast.Design, F=elast. Design)

	N[kN]	Vy[kN]	Vz[kN]	Mt[kNm]	My[kNm]	Mz[kNm]	y[mm]	z[mm]	BUCK
C	58573.3	14099.76	19717.54	829.90	40677.66	5389.33	0.0	1053.	c c
C	0.0				0.00	0.00	0.0	0.0	COMB
E	58573.3	9399.84	17012.99	524.80	34310.59	3296.90	0.0	1053.	
D	50933.3	12260.66	17145.69	721.65	35371.88	4686.37	0.0	1053.	
D	0.0				0.00	0.00	0.0	0.0	COMB
F	50933.3	8173.78	14793.91	456.34	29835.29	2866.87	0.0	1053.	

Additional Design Data

M	periphery-O/-I [m2/m] [m2/m]	deff [mm]	t-min [mm]	t-max [mm]	SMP [o/o]	thet-p [tm2/m]	thet-y [tm2/m]	thet-z [tm2/m]	thet-yz [tm2/m]
	7.161	48.8	45.0	52.0	0.0	0.837	0.806	0.031	

SOFiSTiK AG - www.sofistik.de

Composite bridge 38+50+38, b=14.25m, 2x2HL1100R HISTAR460 , slab 0.30m C30/37

Cross section No. 273.3 = CS 20 - in-situ conc:C2

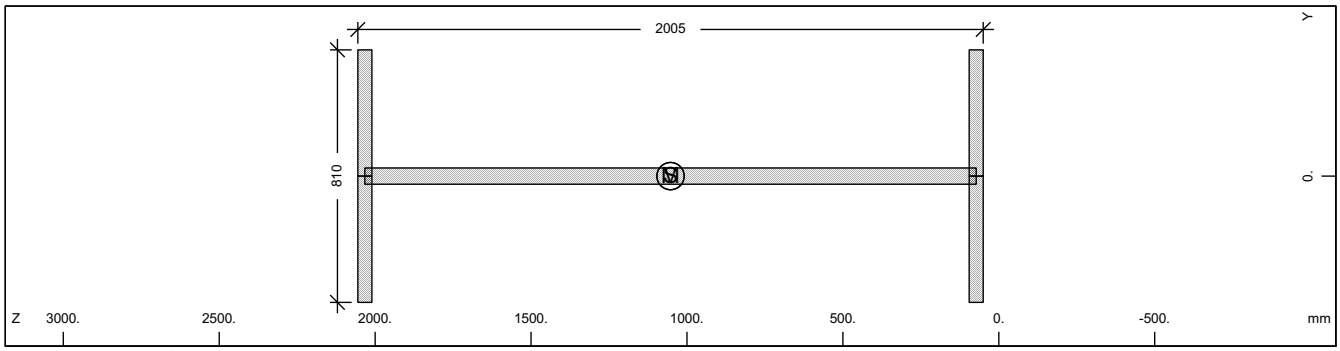

Cross section No. 273

Static properties of cross section

Mat NoR	A[cm2] It[cm4]	Ay/Az/Ayz [cm2]	Iy/Iz/Iyz [cm4]	ys/zs [mm]	modules [N/mm2]	gam [kN/m]
1	1748.46	607.50	10270093.	0.0	210000	13.73
	6270.0	964.27	398580.9	1052.7	80769	

Additional static properties of cross section

Alfa-T [1/°K]	ymin ymax [mm]	zmin zmax [mm]	hymin hzmin [mm]	AK AB [cm2]	MB	Tau-T Tau-B [1/m3]	Tau-Vy Tau-Vz [1/m2]
1.2E-05	-405.0	-1002.7		1.044E+03		3.685E+02	2.058E+01
	405.0	1002.7				1.255E+02	1.137E+01

Section values for warping

Wmin[cm2]	Wmax[cm2]	CM[cm6]	CMS[cm4]	ASwyy[cm6]	ASwzz[cm6]	ry[mm]	rz[mm]
-3970.00	3970.00	3829894137.	5837362.7	-1.23	-31.68	0.0	0.0

Design values of cross section

Mat NoR	A[cm2] It[cm4]	Ay/Az/Ayz [cm2]	Iy/Iz/Iyz [cm4]	ys/zs [mm]	modules [N/mm2]	gam [kN/m]
1	1748.46	607.50	10270093.	0.0	182609	13.73
	6270.0	964.27	398580.9	1052.7	70234	

Design forces and moments
(C/E = characteristic plastic/elastic, D=plast.Design, F=elast. Design)

	N[kN]	Vy[kN]	Vz[kN]	Mt[kNm]	My[kNm]	Mz[kNm]	y[mm]	z[mm]	BUCK
C	58573.3	14099.76	19717.54	829.90	40677.66	5389.33	0.0	1053.	c c
C	0.0				0.00	0.00	0.0	0.0	COMB
E	58573.3	9399.84	17012.99	524.80	34310.59	3296.90	0.0	1053.	
D	50933.3	12260.66	17145.69	721.65	35371.88	4686.37	0.0	1053.	
D	0.0				0.00	0.00	0.0	0.0	COMB
F	50933.3	8173.78	14793.91	456.34	29835.29	2866.87	0.0	1053.	

Additional Design Data

M	periphery-O/-I [m2/m] [m2/m]	deff [mm]	t-min [mm]	t-max [mm]	SMP [o/o]	thet-p [tm2/m]	thet-y [tm2/m]	thet-z [tm2/m]	thet-yz [tm2/m]
	7.161	48.8	45.0	52.0	0.0	0.837	0.806	0.031	

SOFiSTiK AG - www.sofistik.de

Composite bridge 38+50+38, b=14.25m, 2x2HL1100R HISTAR460 , slab 0.30m C30/37

Cross section No. 273.4 = CS 21 - reinf active:C2

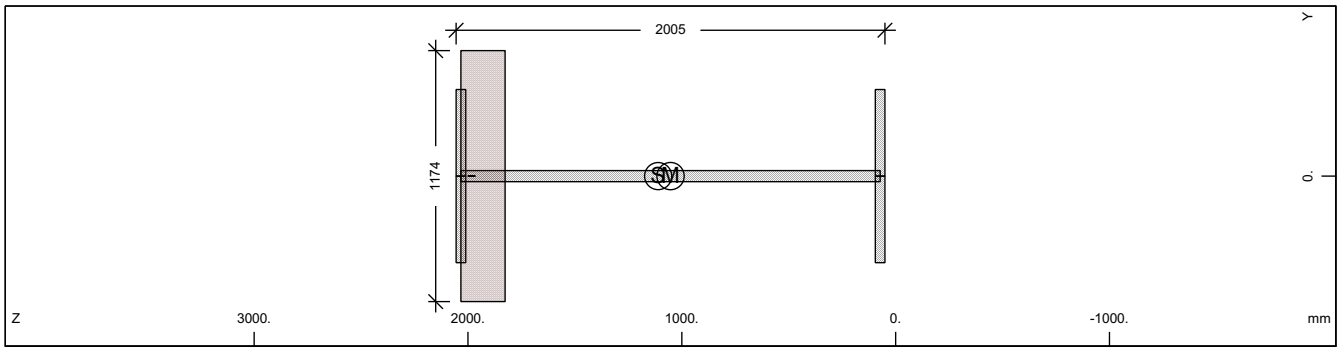

Cross section No. 273

Static properties of cross section

Mat NoR	A[cm2] It[cm4]	Ay/Az/Ayz [cm2]	Iy/Iz/Iyz [cm4]	ys/zs [mm]	modules [N/mm2]	gam [kN/m]
1	1872.20	607.50	11163888.	0.0	210000	19.79
	6270.0	954.30	398580.9	1110.7	80769	

Additional static properties of cross section

Alfa-T [1/°K]	ymin ymax [mm]	zmin zmax [mm]	hymin hzmin [mm]	AK AB [cm2]	MB	Tau-T Tau-B [1/m3]	Tau-Vy Tau-Vz [1/m2]
1.2E-05	-587.0	-1060.7		1.653E+03		1.030E+01	2.058E+01
	587.0	944.8		2.424E+03		1.255E+02	1.135E+01

Section values for warping

Wmin[cm2]	Wmax[cm2]	CM[cm6]	CMS[cm4]	ASwyy[cm6]	ASwzz[cm6]	ry[mm]	rz[mm]
-3970.00	3970.00	3829894137.	5837362.7	-2.40	-67.29	0.0	15.5

Partial cross sections

Mat NoR	A[cm2] It[cm4]	Ay/Az/Ayz [cm2]	Iy/Iz/Iyz [cm4]	ys/zs [mm]	modules [N/mm2]	gam [kN/m]
1	1748.46	607.50	10270093.	0.0	210000	13.73
	14109.4	953.56	398580.9	1052.7	80769	
25	2424.22		86138.9	0.0	10667	6.06
	11137486.	13.51	0.0	1929.7	4444	
210	0.64	0.00	0.0	0.0	200000	0.00
	2.2	0.00	0.0	1983.0	76923	

Design values of cross section

Mat NoR	A[cm2] It[cm4]	Ay/Az/Ayz [cm2]	Iy/Iz/Iyz [cm4]	ys/zs [mm]	modules [N/mm2]	gam [kN/m]
1	1843.47	607.50	10967136.	0.0	182609	19.79
	6270.0	954.13	398580.9	1098.0	70234	

Design forces and moments
(C/E = characteristic plastic/elastic, D=plast.Design, F=elast. Design)

	N[kN]	Vy[kN]	Vz[kN]	Mt[kNm]	My[kNm]	Mz[kNm]	y[mm]	z[mm]	BUCK
C	58605.4	14118.33	24179.38	3185.57	40707.56	6468.39	2.2	1054.	c c
C	-1988.0				40764.28	0.00	0.0	1111.	COMB
C	-3636.3				0.00	6456.85	0.0	0.0	COMB
C	-65878.1	14118.33	24179.38	3185.57	-46319.9	-6452.18	-2.2	1262.	
C	-5284.6				-46720.7	0.00	0.0	1111.	COMB
C	-3636.3				0.00	-6456.85	0.0	0.0	COMB
E	62718.8	9399.84	17045.84	1601.36	35257.78	3296.90	0.0	1111.	
E	-62718.8	9399.84	17045.84	1601.36	-35257.8	-3296.90	0.0	1111.	
D	50961.2	12276.81	20213.96	2293.66	35397.88	5405.44	2.0	1054.	
D	-1728.7				35447.20	0.00	0.0	1111.	COMB
D	-2424.2				0.00	5398.10	0.0	0.0	COMB
D	-55809.7	12276.81	20213.96	2293.66	-39257.5	-5395.66	-2.0	1214.	
D	-3119.7				-39418.1	0.00	0.0	1111.	COMB
D	-2424.2				0.00	-5398.10	0.0	0.0	COMB

SOFiSTiK AG - www.sofistik.de

Composite bridge 38+50+38, b=14.25m, 2x2HL1100R HISTAR460 , slab 0.30m C30/37

Design forces and moments
(C/E = characteristic plastic/elastic, D=plast.Design, F=elast. Design)

	N[kN]	Vy[kN]	Vz[kN]	Mt[kNm]	My[kNm]	Mz[kNm]	y[mm]	z[mm]	BUCK
F	54538.1	8173.78	14822.47	1067.57	30658.94	2866.87	0.0	1111.	
F	-54538.1	8173.78	14822.47	1067.57	-30658.9	-2866.87	0.0	1111.	

Additional Design Data

M	periphery-O/-I [m2/m]	[m2/m]	deff [mm]	t-min [mm]	t-max [mm]	SMP [o/o]	thet-p [tm2/m]	thet-y [tm2/m]	thet-z [tm2/m]	thet-yz [tm2/m]
	7.578		49.4	32.0	206.5	0.0	1.163	1.132	0.031	
1	7.161		48.8	45.0	52.0	0.0	0.837	0.806	0.031	
25	0.413		1174.0			0.0	0.002	0.002		
**	0.004		32.0			0.0	0.000	0.000	0.000	

Cross section No. 273.5 = CS 30 - in-situ conc:C3

Cross section No. 274 - VFT (253)

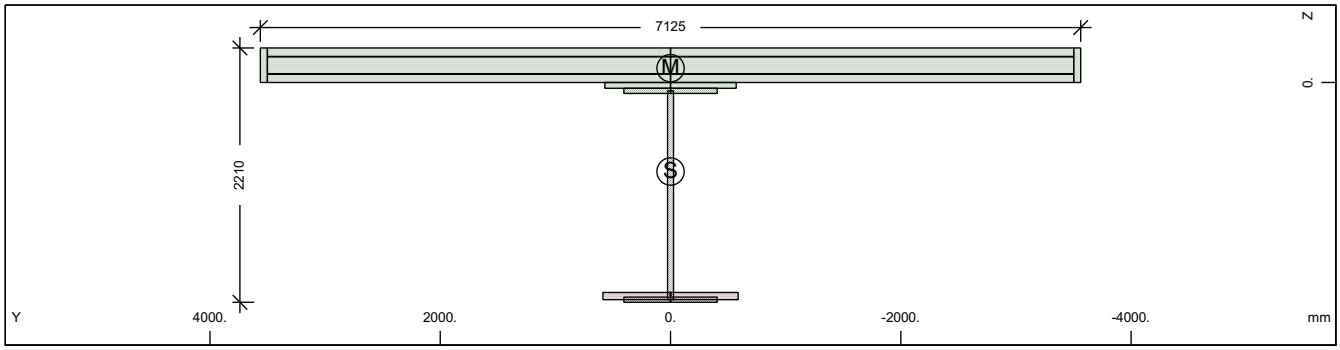

Cross section No. 274 - VFT (253)

Static properties of cross section

Mat NoR	A[cm2] It[cm4]	Ay/Az/Ayz [cm2]	Iy/Iz/Iyz [cm4]	ys/zs [mm]	y/z-sc [mm]	modules [N/mm2]	gam [kN/m]
1	2129.82	365.34	13347159.	0.0	0.0	210000	69.85
	6270.0	557.95	17511070.	773.4	-124.3	80769	

Additional static properties of cross section

Alfa-T [1/°K]	ymin ymax [mm]	zmin zmax [mm]	hymin hzmin [mm]	AK AB [cm2]	MB	Tau-T Tau-B [1/m3]	Tau-Vy Tau-Vz [1/m2]
1.2E-05	-3562.5	-1073.4		5.316E+02		3.204E+01	3.333E+01
	3562.5	1136.2		2.269E+04		1.255E+02	2.494E+01

Section values for warping

Wmin[cm2]	Wmax[cm2]	CM[cm6]	CMS[cm4]	ASwyy[cm6]	ASwzz[cm6]	ry[mm]	rz[mm]
-8146.14	8146.149215609207.		1462075.6	-297.18	-226.51	0.0	811.6

Partial cross sections

Mat NoR	A[cm2] It[cm4]	Ay/Az/Ayz [cm2]	Iy/Iz/Iyz [cm4]	ys/zs [mm]	modules [N/mm2]	gam [kN/m]
1	1672.60	0.11	8590368.2	0.0	210000	13.13
	13425.7	298.71	398580.9	979.8	80769	
25	744.27		2492.7	0.0	10667	1.86
	3419359.4	0.17	0.0	1855.4	4444	
210	0.64	0.00	0.0	0.0	200000	0.00
	2.2	0.00	0.0	1837.1	76923	
31	21945.00	17025.94	170028.4	0.0	0	54.86
	6417251.4	11486.45904880243.		-145.5	0	
300	439.75	383.48	24735.7	0.0	200000	0.00
	14.5	271.69	17968109.	-150.0	76923	

SOFiSTiK AG - www.sofistik.de

Composite bridge 38+50+38, b=14.25m, 2x2HL1100R HISTAR460 , slab 0.30m C30/37

Design values of cross section

Mat NoR	A[cm2] It[cm4]	Ay/Az/Ayz [cm2]	Iy/Iz/Iyz [cm4]	ys/zs [mm]	modules [N/mm2]	gam [kN/m]
1	2121.00	365.34	13243434.	0.0	182609	69.85
	6270.0	557.47	17511070.	768.9	70234	

Design forces and moments
(C/E = characteristic plastic/elastic, D=plast.Design, F=elast. Design)

	N[kN]	Vy[kN]	Vz[kN]	Mt[kNm]	My[kNm]	Mz[kNm]	y[mm]	z[mm]	BUCK
C	78051.4	63021.92	48740.70	100107.3	66235.78	101149.8	30.3	-66.6	c c
C	-80600.0				118072.4	0.00	0.0	773.4	COMB
C	-34033.9				0.00	101529.6	0.0	0.0	COMB
C	-138758.	63021.92	48740.70	100107.3	-57739.6	-101082.	-30.3	413.8	
C	12532.2				-59993.6	0.00	0.0	773.4	COMB
C	-34033.9				0.00	-101530.	0.0	0.0	COMB
E	71348.9	8660.02	11573.34	514.91	39353.80	26257.94	0.0	773.4	
E	-71348.9	8660.02	11573.34	514.91	-39353.8	-26257.9	0.0	773.4	
D	67870.8	47454.87	36826.70	66917.93	56491.59	76383.60	19.7	-73.9	
D	-56729.1				90397.39	0.00	0.0	773.4	COMB
D	-22689.3				0.00	76582.90	0.0	0.0	COMB
D	-108342.	47454.87	36826.69	66917.91	-49551.8	-76354.1	-20.2	398.8	
D	11350.6				-51678.1	0.00	0.0	773.4	COMB
D	-22689.3				0.00	-76582.9	0.0	0.0	COMB
F	62042.5	7530.45	10063.78	343.27	34220.70	22832.99	0.0	773.4	
F	-62042.5	7530.45	10063.78	343.27	-34220.7	-22833.0	0.0	773.4	

Additional Design Data

M	periphery-O/-I [m2/m]	[m2/m]	deff [mm]	t-min [mm]	t-max [mm]	SMP [o/o]	thet-p [tm2/m]	thet-y [tm2/m]	thet-z [tm2/m]	thet-yz [tm2/m]
	51.539		8.3	3.1	300.0	0.0	25.250	2.596	22.653	
1	6.869		48.7	45.0	52.0	0.0	0.706	0.674	0.031	
25	0.127		1174.0			0.0	0.000	0.000		
**	0.004		32.0			0.0	0.000		0.000	
31	16.530		265.5	50.0	300.0	0.0	22.626	0.004	22.622	
**	28.009		3.1	3.1	3.1	0.0	0.000	0.000	0.000	

Cross section No. 274.1 = CS 1 - steel alone

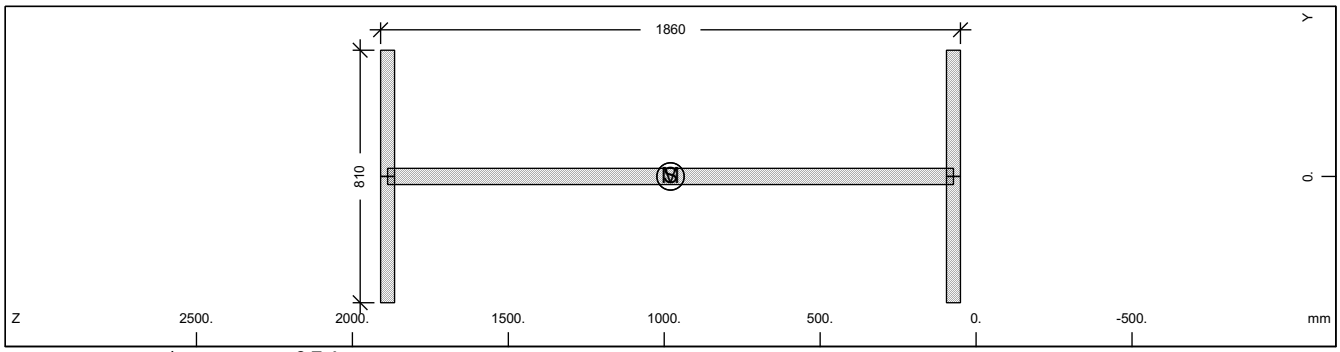

Cross section No. 274

Static properties of cross section

Mat NoR	A[cm2] It[cm4]	Ay/Az/Ayz [cm2]	Iy/Iz/Iyz [cm4]	ys/zs [mm]	modules [N/mm2]	gam [kN/m]
1	1672.60	607.50	8590368.2	0.0	210000	13.13
	6270.0	890.08	398580.9	979.8	80769	

Additional static properties of cross section

Alfa-T [1/°K]	ymin ymax [mm]	zmin zmax [mm]	hymin hzmin [mm]	AK AB [cm2]	MB	Tau-T Tau-B [1/m3]	Tau-Vy Tau-Vz [1/m2]
1.2E-05	-405.0	-929.8		9.930E+02		3.873E+02	2.058E+01
	405.0	929.8				1.255E+02	1.219E+01

SOFiSTiK AG - www.sofistik.de

Composite bridge 38+50+38, b=14.25m, 2x2HL1100R HISTAR460 , slab 0.30m C30/37

Section values for warping

Wmin[cm2]	Wmax[cm2]	CM[cm6]	CMS[cm4]	ASwyy[cm6]	ASwzz[cm6]	ry[mm]	rz[mm]
-3674.58	3674.583281121621.	5000946.7		-1.25	-26.96	0.0	0.0

Design values of cross section

Mat NoR	A[cm2] It[cm4]	Ay/Az/Ayz [cm2]	Iy/Iz/Iyz [cm4]	ys/zs [mm]	modules [N/mm2]	gam [kN/m]
1	1672.60	607.50	8590368.2	0.0	182609	13.13
	6270.0	890.08	398580.9	979.8	70234	

Design forces and moments
(C/E = characteristic plastic/elastic, D=plast.Design, F=elast. Design)

	N[kN]	Vy[kN]	Vz[kN]	Mt[kNm]	My[kNm]	Mz[kNm]	y[mm]	z[mm]	BUCK
C	56032.0	14099.76	18250.32	791.75	36497.90	5356.29	0.0	979.8	c c
C	0.0				0.00	0.00	0.0	0.0	COMB
E	56032.0	9399.84	15860.11	499.36	30950.31	3296.90	0.0	979.8	
D	48723.5	12260.66	15869.85	688.48	31737.30	4657.64	0.0	979.8	
D	0.0				0.00	0.00	0.0	0.0	COMB
F	48723.5	8173.78	13791.40	434.23	26913.31	2866.87	0.0	979.8	

Additional Design Data

M	periphery-O/-I [m2/m]	[m2/m]	deff [mm]	t-min [mm]	t-max [mm]	SMP [o/o]	thet-p [tm2/m]	thet-y [tm2/m]	thet-z [tm2/m]	thet-yz [tm2/m]
	6.869		48.7	45.0	52.0	0.0	0.706	0.674	0.031	

Cross section No. 274.2 = CS 10 - prefab. slab C1

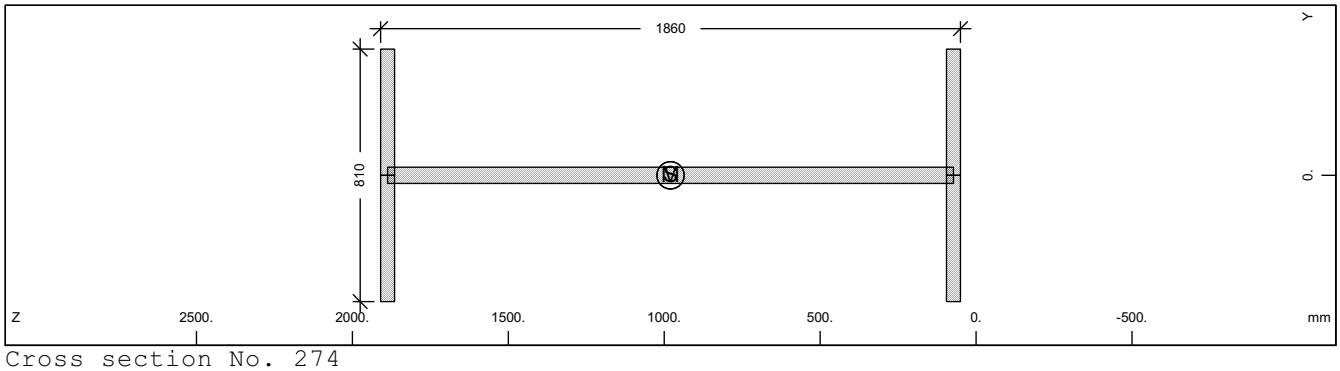

Cross section No. 274

Static properties of cross section

Mat NoR	A[cm2] It[cm4]	Ay/Az/Ayz [cm2]	Iy/Iz/Iyz [cm4]	ys/zs [mm]	modules [N/mm2]	gam [kN/m]
1	1672.60	607.50	8590368.2	0.0	210000	13.13
	6270.0	890.08	398580.9	979.8	80769	

Additional static properties of cross section

Alfa-T [1/°K]	ymin ymax [mm]	zmin zmax [mm]	hymin hzmin [mm]	AK AB [cm2]	MB	Tau-T Tau-B [1/m3]	Tau-Vy Tau-Vz [1/m2]
1.2E-05	-405.0	-929.8		9.930E+02		3.873E+02	2.058E+01
	405.0	929.8				1.255E+02	1.219E+01

Section values for warping

Wmin[cm2]	Wmax[cm2]	CM[cm6]	CMS[cm4]	ASwyy[cm6]	ASwzz[cm6]	ry[mm]	rz[mm]
-3674.58	3674.583281121621.	5000946.7		-1.25	-26.96	0.0	0.0

Design values of cross section

Mat NoR	A[cm2] It[cm4]	Ay/Az/Ayz [cm2]	Iy/Iz/Iyz [cm4]	ys/zs [mm]	modules [N/mm2]	gam [kN/m]
1	1672.60	607.50	8590368.2	0.0	182609	13.13
	6270.0	890.08	398580.9	979.8	70234	

SOFiSTiK AG - www.sofistik.de

Composite bridge 38+50+38, b=14.25m, 2x2HL1100R HISTAR460 , slab 0.30m C30/37

Design forces and moments
(C/E = characteristic plastic/elastic, D=plast.Design, F=elast. Design)

	N[kN]	Vy[kN]	Vz[kN]	Mt[kNm]	My[kNm]	Mz[kNm]	y[mm]	z[mm]	BUCK
C	56032.0	14099.76	18250.32	791.75	36497.90	5356.29	0.0	979.8	c c
C	0.0				0.00	0.00	0.0	0.0	COMB
E	56032.0	9399.84	15860.11	499.36	30950.31	3296.90	0.0	979.8	
D	48723.5	12260.66	15869.85	688.48	31737.30	4657.64	0.0	979.8	
D	0.0				0.00	0.00	0.0	0.0	COMB
F	48723.5	8173.78	13791.40	434.23	26913.31	2866.87	0.0	979.8	

Additional Design Data

M	periphery-O/-I [m2/m]	[m2/m]	deff [mm]	t-min [mm]	t-max [mm]	SMP [o/o]	thet-p [tm2/m]	thet-y [tm2/m]	thet-z [tm2/m]	thet-yz [tm2/m]
	6.869		48.7	45.0	52.0	0.0	0.706	0.674	0.031	

Cross section No. 274.3 = CS 20 - in-situ conc:C2

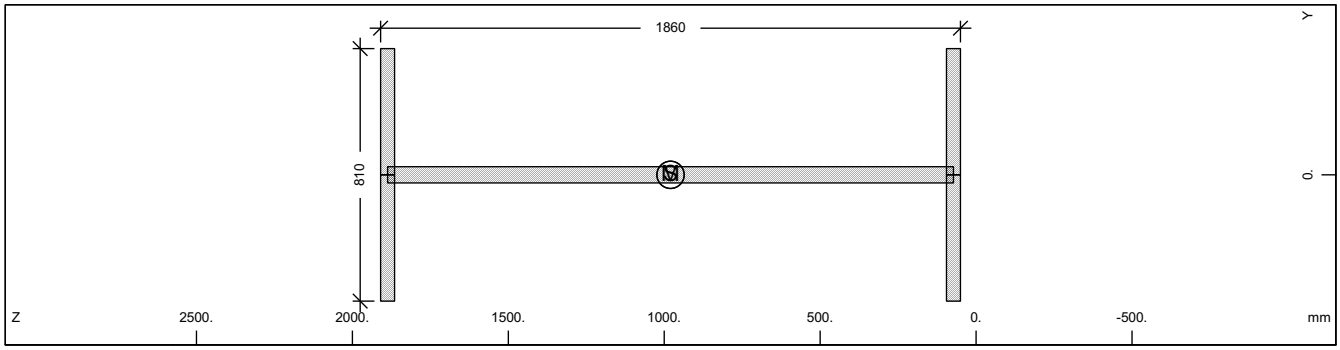

Cross section No. 274

Static properties of cross section

Mat NoR	A[cm2] It[cm4]	Ay/Az/Ayz [cm2]	Iy/Iz/Iyz [cm4]	ys/zs [mm]	modules [N/mm2]	gam [kN/m]
1	1672.60	607.50	8590368.2	0.0	210000	13.13
	6270.0	890.08	398580.9	979.8	80769	

Additional static properties of cross section

Alfa-T [1/°K]	ymin ymax [mm]	zmin zmax [mm]	hymin hzmin [mm]	AK AB [cm2]	MB	Tau-T Tau-B [1/m3]	Tau-Vy Tau-Vz [1/m2]
1.2E-05	-405.0	-929.8		9.930E+02		3.873E+02	2.058E+01
	405.0	929.8				1.255E+02	1.219E+01

Section values for warping

Wmin[cm2]	Wmax[cm2]	CM[cm6]	CMS[cm4]	ASwyy[cm6]	ASwzz[cm6]	ry[mm]	rz[mm]
-3674.58	3674.583281121621.	5000946.7		-1.25	-26.96	0.0	0.0

Design values of cross section

Mat NoR	A[cm2] It[cm4]	Ay/Az/Ayz [cm2]	Iy/Iz/Iyz [cm4]	ys/zs [mm]	modules [N/mm2]	gam [kN/m]
1	1672.60	607.50	8590368.2	0.0	182609	13.13
	6270.0	890.08	398580.9	979.8	70234	

Design forces and moments
(C/E = characteristic plastic/elastic, D=plast.Design, F=elast. Design)

	N[kN]	Vy[kN]	Vz[kN]	Mt[kNm]	My[kNm]	Mz[kNm]	y[mm]	z[mm]	BUCK
C	56032.0	14099.76	18250.32	791.75	36497.90	5356.29	0.0	979.8	c c
C	0.0				0.00	0.00	0.0	0.0	COMB
E	56032.0	9399.84	15860.11	499.36	30950.31	3296.90	0.0	979.8	
D	48723.5	12260.66	15869.85	688.48	31737.30	4657.64	0.0	979.8	
D	0.0				0.00	0.00	0.0	0.0	COMB
F	48723.5	8173.78	13791.40	434.23	26913.31	2866.87	0.0	979.8	

SOFiSTiK AG - www.sofistik.de

Composite bridge 38+50+38, b=14.25m, 2x2HL1100R HISTAR460 , slab 0.30m C30/37

Additional Design Data

M	periphery-O/-I [m2/m]	[m2/m]	deff [mm]	t-min [mm]	t-max [mm]	SMP [o/o]	thet-p [tm2/m]	thet-y [tm2/m]	thet-z [tm2/m]	thet-yz [tm2/m]
	6.869		48.7	45.0	52.0	0.0	0.706	0.674	0.031	

Cross section No. 274.4 = CS 21 - reinf active:C2

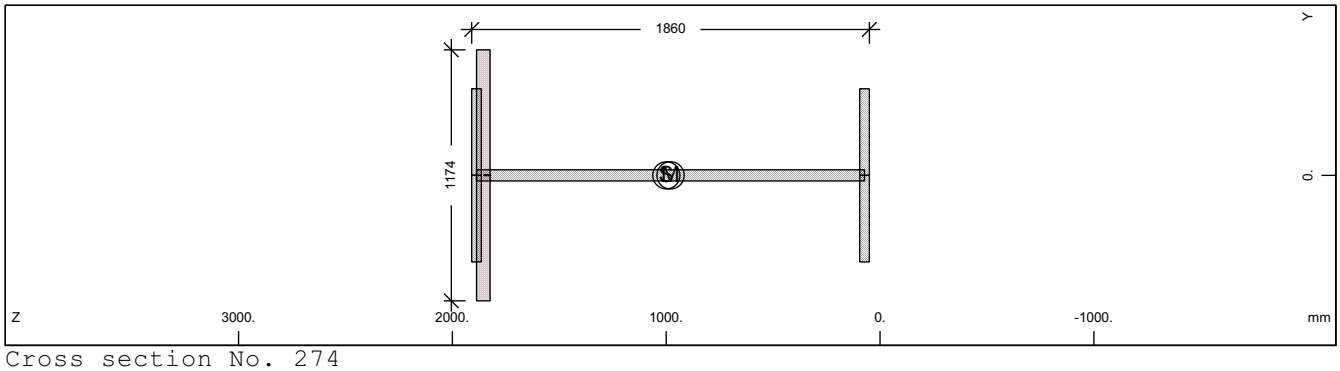

Cross section No. 274

Static properties of cross section

Mat NoR	A[cm2] It[cm4]	Ay/Az/Ayz [cm2]	Iy/Iz/Iyz [cm4]	ys/zs [mm]	modules [N/mm2]	gam [kN/m]
1	1711.01	607.50	8878226.6	0.0	210000	14.99
	6270.0	891.19	398580.9	999.5	80769	

Additional static properties of cross section

Alfa-T [1/°K]	ymin ymax [mm]	zmin zmax [mm]	hymin hzmin [mm]	AK AB [cm2]	MB	Tau-T Tau-B [1/m3]	Tau-Vy Tau-Vz [1/m2]
1.2E-05	-587.0	-949.5		5.316E+02		3.205E+01	2.058E+01
	587.0	910.2		7.443E+02		1.255E+02	1.216E+01

Section values for warping

Wmin[cm2]	Wmax[cm2]	CM[cm6]	CMS[cm4]	ASwyy[cm6]	ASwzz[cm6]	ry[mm]	rz[mm]
-3674.58	3674.583281121854.		5000947.1	3.69	82.10	0.0	8.5

Partial cross sections

Mat NoR	A[cm2] It[cm4]	Ay/Az/Ayz [cm2]	Iy/Iz/Iyz [cm4]	ys/zs [mm]	modules [N/mm2]	gam [kN/m]
1	1672.60	607.50	8590368.2	0.0	210000	13.13
	13425.7	891.15	398580.9	979.8	80769	
25	744.27		2492.7	0.0	10667	1.86
	3419359.4	0.62	0.0	1855.4	4444	
210	0.64	0.00	0.0	0.0	200000	0.00
	2.2	0.00	0.0	1837.1	76923	

Design values of cross section

Mat NoR	A[cm2] It[cm4]	Ay/Az/Ayz [cm2]	Iy/Iz/Iyz [cm4]	ys/zs [mm]	modules [N/mm2]	gam [kN/m]
1	1702.19	607.50	8813235.2	0.0	182609	14.99
	6270.0	891.18	398580.9	995.0	70234	

Design forces and moments
(C/E = characteristic plastic/elastic, D=plast.Design, F=elast. Design)

	N[kN]	Vy[kN]	Vz[kN]	Mt[kNm]	My[kNm]	Mz[kNm]	y[mm]	z[mm]	BUCK
C	56064.1	14118.33	19940.24	1520.30	36525.45	5685.70	0.9	980.7	c c
C	-652.6				36531.56	0.00	0.0	999.5	COMB
C	-1116.4				0.00	5684.21	0.0	0.0	COMB
C	-58296.9	14118.33	19940.24	1520.30	-38406.9	-5683.61	-0.9	1045.	
C	-1580.2				-38442.7	0.00	0.0	999.5	COMB
C	-1116.4				0.00	-5684.21	0.0	0.0	COMB
E	57318.9	9399.84	15908.66	514.87	31325.33	3296.90	0.0	999.5	
E	-57318.9	9399.84	15908.66	514.87	-31325.3	-3296.90	0.0	999.5	
D	48751.4	12276.81	17090.18	1175.74	31761.26	4876.99	0.7	980.7	

SOFiSTiK AG - www.sofistik.de

Composite bridge 38+50+38, b=14.25m, 2x2HL1100R HISTAR460 , slab 0.30m C30/37

Design forces and moments
(C/E = characteristic plastic/elastic, D=plast.Design, F=elast. Design)

	N[kN]	Vy[kN]	Vz[kN]	Mt[kNm]	My[kNm]	Mz[kNm]	y[mm]	z[mm]	BUCK
D	-567.4				31766.57	0.00	0.0	999.5	COMB
D	-744.3				0.00	4876.31	0.0	0.0	COMB
D	-50240.0	12276.81	17090.18	1175.74	-33026.7	-4875.96	-0.7	1030.	
D	-921.1				-33040.7	0.00	0.0	999.5	COMB
D	-744.3				0.00	-4876.31	0.0	0.0	COMB
F	49842.6	8173.78	13833.62	343.25	27239.42	2866.87	0.0	999.5	
F	-49842.6	8173.78	13833.62	343.25	-27239.4	-2866.87	0.0	999.5	

Additional Design Data

M	periphery-O/-I [m2/m]	[m2/m]	deff [mm]	t-min [mm]	t-max [mm]	SMP [o/o]	thet-p [tm2/m]	thet-y [tm2/m]	thet-z [tm2/m]	thet-yz [tm2/m]
	7.000		48.9	32.0	63.4	0.0	0.831	0.799	0.031	
1	6.869		48.7	45.0	52.0	0.0	0.706	0.674	0.031	
25	0.127		1174.0			0.0	0.000	0.000		
**	0.004		32.0			0.0	0.000		0.000	

Cross section No. 274.5 = CS 30 - in-situ conc:C3

Cross section No. 275 - VFT (253)

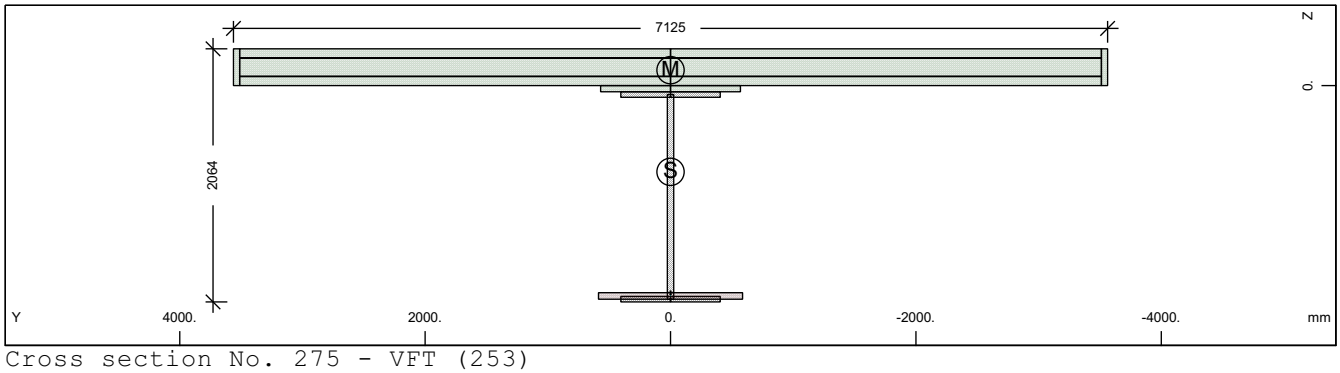

Cross section No. 275 - VFT (253)

Static properties of cross section

Mat NoR	A[cm2] It[cm4]	Ay/Az/Ayz [cm2]	Iy/Iz/Iyz [cm4]	ys/zs [mm]	y/z-sc [mm]	modules [N/mm2]	gam [kN/m]
1	2049.01	366.34	11161376.	0.0	0.0	210000	68.95
	6270.0	486.58	17674132.	702.8	-126.2	80769	

Additional static properties of cross section

Alfa-T [1/°K]	ymin ymax [mm]	zmin zmax [mm]	hymin hzmin [mm]	AK AB [cm2]	MB	Tau-T Tau-B [1/m3]	Tau-Vy Tau-Vz [1/m2]
1.2E-05	-3562.5	-1002.8		4.476E+02		3.806E+01	3.324E+01
	3562.5	1060.9		2.257E+04		1.255E+02	2.781E+01

Section values for warping

Wmin[cm2]	Wmax[cm2]	CM[cm6]	CMS[cm4]	ASwyy[cm6]	ASwzz[cm6]	ry[mm]	rz[mm]
-7562.84	7562.848097922462.		1142391.1	105.88	66.86	0.0	537.1

Partial cross sections

Mat NoR	A[cm2] It[cm4]	Ay/Az/Ayz [cm2]	Iy/Iz/Iyz [cm4]	ys/zs [mm]	modules [N/mm2]	gam [kN/m]
1	1596.73	0.11	7088401.2	0.0	210000	12.53
	12741.8	243.55	398580.9	906.9	80769	
25	620.94		1447.5	0.0	10667	1.55
	2852745.4	0.09	0.0	1714.8	4444	
210	0.64	0.00	0.0	0.0	200000	0.00
	2.2	0.00	0.0	1691.2	76923	
31	21945.00	16804.94	170028.4	0.0	0	54.86
	6417251.4	10655.03904880243.		-145.5	0	

SOFiSTiK AG - www.sofistik.de

Composite bridge 38+50+38, b=14.25m, 2x2HL1100R HISTAR460 , slab 0.30m C30/37

300	441.14	384.54	24814.0	0.0	200000	0.00
	14.5	254.71	18139325.	-150.0	76923	

Design values of cross section

Mat	A[cm2]	Ay/Az/Ayz	Iy/Iz/Iyz	ys/zs	modules	gam
NoR	It[cm4]	[cm2]	[cm4]	[mm]	[N/mm2]	[kN/m]
1	2041.65	366.34	11085727.	0.0	182609	68.95
	6270.0	486.13	17674132.	699.2	70234	

Design forces and moments
(C/E = characteristic plastic/elastic, D=plast.Design, F=elast. Design)

	N[kN]	Vy[kN]	Vz[kN]	Mt[kNm]	My[kNm]	Mz[kNm]	y[mm]	z[mm]	BUCK
C	75579.3	63062.11	47069.75	99949.73	59647.57	101277.4	60.4	-75.8	c c
C	-80751.4				107916.8	0.00	0.0	702.8	COMB
C	-33848.9				0.00	101686.4	0.0	0.0	COMB
C	-137246.	63062.11	47069.75	99949.73	-51510.1	-101165.	-60.4	328.3	
C	13053.6				-53955.5	0.00	0.0	702.8	COMB
C	-33848.9				0.00	-101686.	0.0	0.0	COMB
E	68641.8	8685.57	10381.66	433.52	35244.95	26418.80	0.0	702.8	
E	-68641.8	8685.57	10381.66	433.52	-35245.0	-26418.8	0.0	702.8	
D	65721.1	47489.82	35414.98	66805.17	50769.64	76512.34	21.7	-74.2	
D	-56860.8				82509.54	0.00	0.0	702.8	COMB
D	-22565.9				0.00	76730.24	0.0	0.0	COMB
D	-106832.	47489.82	35414.98	66805.17	-44264.9	-76485.4	-21.7	315.8	
D	11728.9				-46535.3	0.00	0.0	702.8	COMB
D	-22565.9				0.00	-76730.2	0.0	0.0	COMB
F	59688.5	7552.67	9027.53	289.02	30647.79	22972.88	0.0	702.8	
F	-59688.5	7552.67	9027.53	289.02	-30647.8	-22972.9	0.0	702.8	

Additional Design Data

M	periphery-O/-I		deff	t-min	t-max	SMP	thet-p	thet-y	thet-z	thet-yz
	[m2/m]	[m2/m]	[mm]	[mm]	[mm]	[o/o]	[tm2/m]	[tm2/m]	[tm2/m]	[tm2/m]
	51.315		8.0	3.1	300.0	0.0	24.764	2.111	22.653	
1	6.577		48.6	45.0	52.0	0.0	0.588	0.556	0.031	
25	0.106		1174.0			0.0	0.000	0.000		
**	0.004		32.0			0.0	0.000		0.000	
31	16.530		265.5	50.0	300.0	0.0	22.626	0.004	22.622	
**	28.098		3.1	3.1	3.1	0.0	0.000	0.000	0.000	

Cross section No. 275.1 = CS 1 - steel alone

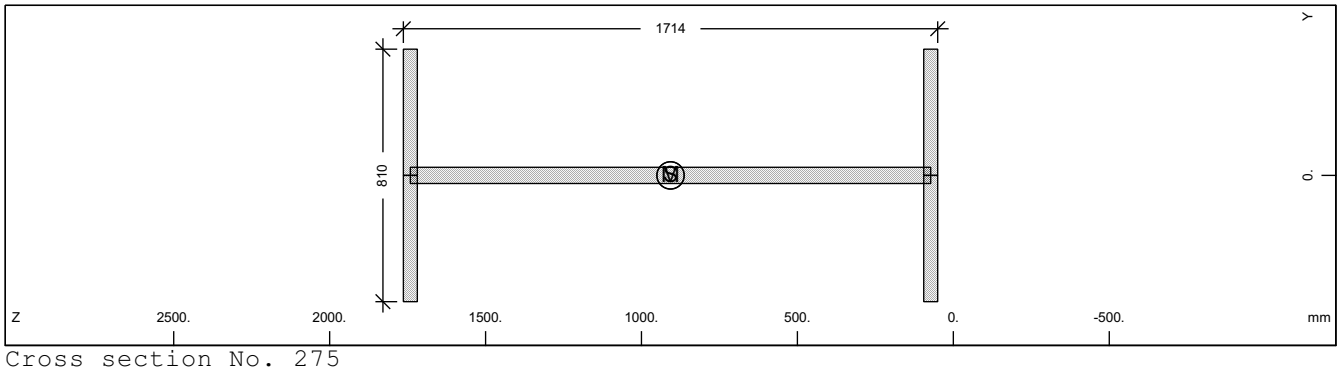

Cross section No. 275

Static properties of cross section

Mat	A[cm2]	Ay/Az/Ayz	Iy/Iz/Iyz	ys/zs	modules	gam
NoR	It[cm4]	[cm2]	[cm4]	[mm]	[N/mm2]	[kN/m]
1	1596.73	607.50	7088401.2	0.0	210000	12.53
	6270.0	815.49	398580.9	906.9	80769	

SOFiSTiK AG - www.sofistik.de

Composite bridge 38+50+38, b=14.25m, 2x2HL1100R HISTAR460 , slab 0.30m C30/37

Additional static properties of cross section

Alfa-T	ymin ymax	zmin zmax	hymin hzmin	AK AB	MB	Tau-T Tau-B	Tau-Vy Tau-Vz
[1/°K]	[mm]	[mm]	[mm]	[cm2]		[1/m3]	[1/m2]
1.2E-05	-405.0	-856.9		9.424E+02		4.081E+02	2.058E+01
	405.0	856.9				1.255E+02	1.316E+01

Section values for warping

Wmin[cm2]	Wmax[cm2]	CM[cm6]	CMS[cm4]	ASwyy[cm6]	ASwzz[cm6]	ry[mm]	rz[mm]
-3379.12	3379.122774685865.		4229058.7	-1.20	-21.27	0.0	0.0

Design values of cross section

Mat NoR	A[cm2] It[cm4]	Ay/Az/Ayz [cm2]	Iy/Iz/Iyz [cm4]	ys/zs [mm]	modules [N/mm2]	gam [kN/m]
1	1596.73	607.50	7088401.2	0.0	182609	12.53
	6270.0	815.49	398580.9	906.9	70234	

Design forces and moments
(C/E = characteristic plastic/elastic, D=plast.Design, F=elast. Design)

	N[kN]	Vy[kN]	Vz[kN]	Mt[kNm]	My[kNm]	Mz[kNm]	y[mm]	z[mm]	BUCK
C	53490.3	14099.76	16782.87	753.60	32502.88	5323.25	0.0	906.9	c c
C	0.0				0.00	0.00	0.0	0.0	COMB
E	53490.3	9399.84	14695.65	473.93	27713.28	3296.90	0.0	906.9	
D	46513.3	12260.66	14593.80	655.30	28263.38	4628.91	0.0	906.9	
D	0.0				0.00	0.00	0.0	0.0	COMB
F	46513.3	8173.78	12778.83	412.11	24098.51	2866.87	0.0	906.9	

Additional Design Data

M	periphery-O/-I [m2/m]	[m2/m]	deff [mm]	t-min [mm]	t-max [mm]	SMP [o/o]	thet-p [tm2/m]	thet-y [tm2/m]	thet-z [tm2/m]	thet-yz [tm2/m]
	6.577		48.6	45.0	52.0	0.0	0.588	0.556	0.031	

Cross section No. 275.2 = CS 10 - prefab. slab C1

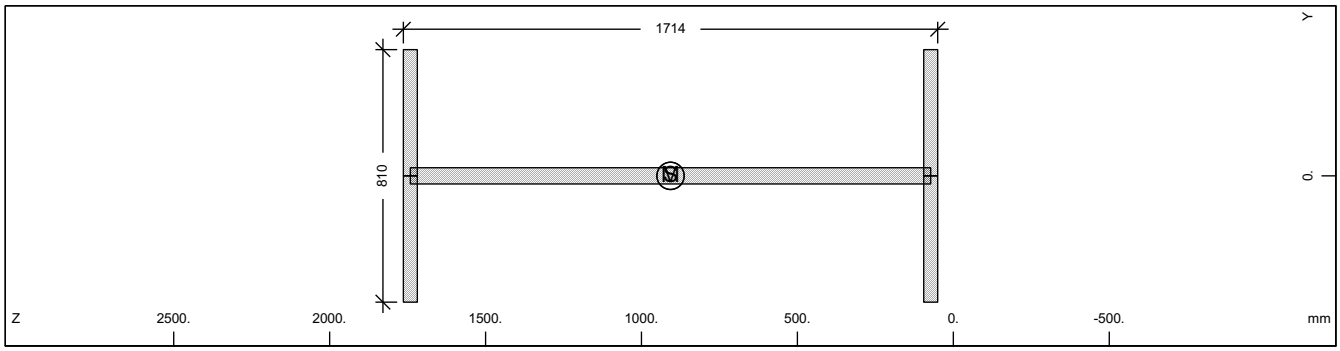

Cross section No. 275

Static properties of cross section

Mat NoR	A[cm2] It[cm4]	Ay/Az/Ayz [cm2]	Iy/Iz/Iyz [cm4]	ys/zs [mm]	modules [N/mm2]	gam [kN/m]
1	1596.73	607.50	7088401.2	0.0	210000	12.53
	6270.0	815.49	398580.9	906.9	80769	

Additional static properties of cross section

Alfa-T	ymin ymax	zmin zmax	hymin hzmin	AK AB	MB	Tau-T Tau-B	Tau-Vy Tau-Vz
[1/°K]	[mm]	[mm]	[mm]	[cm2]		[1/m3]	[1/m2]
1.2E-05	-405.0	-856.9		9.424E+02		4.081E+02	2.058E+01
	405.0	856.9				1.255E+02	1.316E+01

Section values for warping

Wmin[cm2]	Wmax[cm2]	CM[cm6]	CMS[cm4]	ASwyy[cm6]	ASwzz[cm6]	ry[mm]	rz[mm]
-3379.12	3379.122774685865.		4229058.7	-1.20	-21.27	0.0	0.0

SOFiSTiK AG - www.sofistik.de

Composite bridge 38+50+38, b=14.25m, 2x2HL1100R HISTAR460 , slab 0.30m C30/37

Design values of cross section

Mat NoR	A[cm2] It[cm4]	Ay/Az/Ayz [cm2]	Iy/Iz/Iyz [cm4]	ys/zs [mm]	modules [N/mm2]	gam [kN/m]
1	1596.73	607.50	7088401.2	0.0	182609	12.53
	6270.0	815.49	398580.9	906.9	70234	

Design forces and moments
(C/E = characteristic plastic/elastic, D=plast.Design, F=elast. Design)

	N[kN]	Vy[kN]	Vz[kN]	Mt[kNm]	My[kNm]	Mz[kNm]	y[mm]	z[mm]	BUCK
C	53490.3	14099.76	16782.87	753.60	32502.88	5323.25	0.0	906.9	c c
C	0.0				0.00	0.00	0.0	0.0	COMB
E	53490.3	9399.84	14695.65	473.93	27713.28	3296.90	0.0	906.9	
D	46513.3	12260.66	14593.80	655.30	28263.38	4628.91	0.0	906.9	
D	0.0				0.00	0.00	0.0	0.0	COMB
F	46513.3	8173.78	12778.83	412.11	24098.51	2866.87	0.0	906.9	

Additional Design Data

M	periphery-O/-I [m2/m] [m2/m]	deff [mm]	t-min [mm]	t-max [mm]	SMP [o/o]	thet-p [tm2/m]	thet-y [tm2/m]	thet-z [tm2/m]	thet-yz [tm2/m]
	6.577	48.6	45.0	52.0	0.0	0.588	0.556	0.031	

Cross section No. 275.3 = CS 20 - in-situ conc:C2

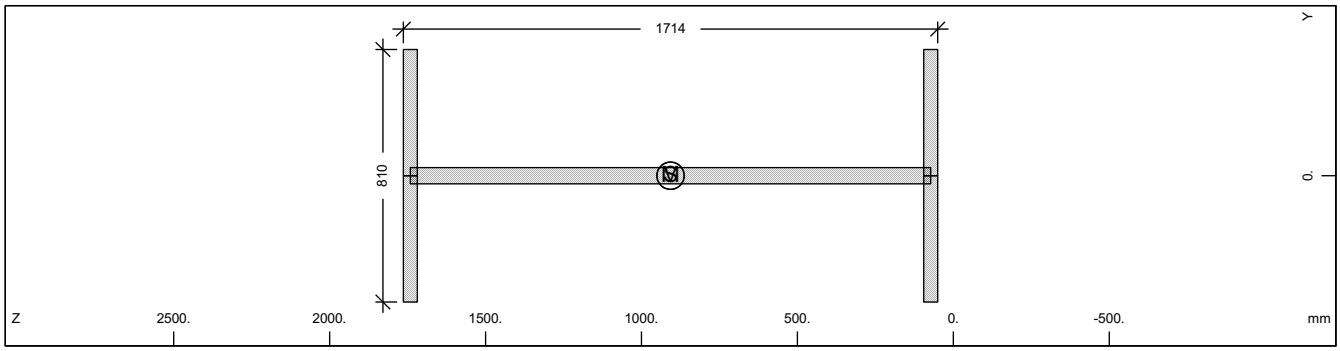

Cross section No. 275

Static properties of cross section

Mat NoR	A[cm2] It[cm4]	Ay/Az/Ayz [cm2]	Iy/Iz/Iyz [cm4]	ys/zs [mm]	modules [N/mm2]	gam [kN/m]
1	1596.73	607.50	7088401.2	0.0	210000	12.53
	6270.0	815.49	398580.9	906.9	80769	

Additional static properties of cross section

Alfa-T [1/°K]	ymin ymax [mm]	zmin zmax [mm]	hymin hzmin [mm]	AK AB [cm2]	MB	Tau-T Tau-B [1/m3]	Tau-Vy Tau-Vz [1/m2]
1.2E-05	-405.0	-856.9		9.424E+02		4.081E+02	2.058E+01
	405.0	856.9				1.255E+02	1.316E+01

Section values for warping

Wmin[cm2]	Wmax[cm2]	CM[cm6]	CMS[cm4]	ASwyy[cm6]	ASwzz[cm6]	ry[mm]	rz[mm]
-3379.12	3379.122774685865.		4229058.7	-1.20	-21.27	0.0	0.0

Design values of cross section

Mat NoR	A[cm2] It[cm4]	Ay/Az/Ayz [cm2]	Iy/Iz/Iyz [cm4]	ys/zs [mm]	modules [N/mm2]	gam [kN/m]
1	1596.73	607.50	7088401.2	0.0	182609	12.53
	6270.0	815.49	398580.9	906.9	70234	

Design forces and moments
(C/E = characteristic plastic/elastic, D=plast.Design, F=elast. Design)

	N[kN]	Vy[kN]	Vz[kN]	Mt[kNm]	My[kNm]	Mz[kNm]	y[mm]	z[mm]	BUCK
C	53490.3	14099.76	16782.87	753.60	32502.88	5323.25	0.0	906.9	c c
C	0.0				0.00	0.00	0.0	0.0	COMB
E	53490.3	9399.84	14695.65	473.93	27713.28	3296.90	0.0	906.9	

SOFiSTiK AG - www.sofistik.de

Composite bridge 38+50+38, b=14.25m, 2x2HL1100R HISTAR460 , slab 0.30m C30/37

Design forces and moments
(C/E = characteristic plastic/elastic, D=plast.Design, F=elast. Design)

	N[kN]	Vy[kN]	Vz[kN]	Mt[kNm]	My[kNm]	Mz[kNm]	y[mm]	z[mm]	BUCK
D	46513.3	12260.66	14593.80	655.30	28263.38	4628.91	0.0	906.9	
D	0.0				0.00	0.00	0.0	0.0	COMB
F	46513.3	8173.78	12778.83	412.11	24098.51	2866.87	0.0	906.9	

Additional Design Data

M	periphery-O/-I [m2/m]	[m2/m]	deff [mm]	t-min [mm]	t-max [mm]	SMP [o/o]	thet-p [tm2/m]	thet-y [tm2/m]	thet-z [tm2/m]	thet-yz [tm2/m]
	6.577		48.6	45.0	52.0	0.0	0.588	0.556	0.031	

Cross section No. 275.4 = CS 21 - reinf active:C2

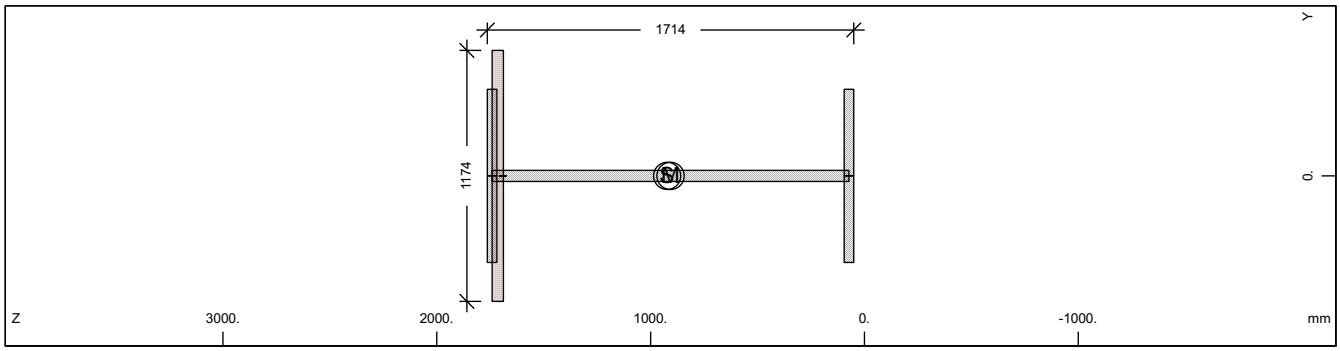

Cross section No. 275

Static properties of cross section

Mat NoR	A[cm2] It[cm4]	Ay/Az/Ayz [cm2]	Iy/Iz/Iyz [cm4]	ys/zs [mm]	modules [N/mm2]	gam [kN/m]
1	1628.88	607.50	7293967.9	0.0	210000	14.09
	6270.0	816.70	398580.9	922.8	80769	

Additional static properties of cross section

Alfa-T [1/°K]	ymin ymax [mm]	zmin zmax [mm]	hymin hzmin [mm]	AK AB [cm2]	MB	Tau-T Tau-B [1/m3]	Tau-Vy Tau-Vz [1/m2]
1.2E-05	-587.0	-872.8		4.476E+02		3.806E+01	2.058E+01
	587.0	840.9		6.209E+02		1.255E+02	1.313E+01

Section values for warping

Wmin[cm2]	Wmax[cm2]	CM[cm6]	CMS[cm4]	ASwyy[cm6]	ASwzz[cm6]	ry[mm]	rz[mm]
-3379.12	3379.122774685865.		4229058.7	-1.80	-32.93	0.0	6.4

Partial cross sections

Mat NoR	A[cm2] It[cm4]	Ay/Az/Ayz [cm2]	Iy/Iz/Iyz [cm4]	ys/zs [mm]	modules [N/mm2]	gam [kN/m]
1	1596.73	607.50	7088401.2	0.0	210000	12.53
	12741.8	816.68	398580.9	906.9	80769	
25	620.94		1447.5	0.0	10667	1.55
	2852745.4	0.38	0.0	1714.8	4444	
210	0.64	0.00	0.0	0.0	200000	0.00
	2.2	0.00	0.0	1691.2	76923	

Design values of cross section

Mat NoR	A[cm2] It[cm4]	Ay/Az/Ayz [cm2]	Iy/Iz/Iyz [cm4]	ys/zs [mm]	modules [N/mm2]	gam [kN/m]
1	1621.52	607.50	7247582.9	0.0	182609	14.09
	6270.0	816.69	398580.9	919.2	70234	

Design forces and moments
(C/E = characteristic plastic/elastic, D=plast.Design, F=elast. Design)

	N[kN]	Vy[kN]	Vz[kN]	Mt[kNm]	My[kNm]	Mz[kNm]	y[mm]	z[mm]	BUCK
C	53522.4	14118.33	18269.30	1362.70	32528.09	5597.96	0.8	907.8	c c
C	-523.1				32532.02	0.00	0.0	922.8	COMB

SOFiSTiK AG - www.sofistik.de

Composite bridge 38+50+38, b=14.25m, 2x2HL1100R HISTAR460 , slab 0.30m C30/37

Design forces and moments
(C/E = characteristic plastic/elastic, D=plast.Design, F=elast. Design)

	N[kN]	Vy[kN]	Vz[kN]	Mt[kNm]	My[kNm]	Mz[kNm]	y[mm]	z[mm]	BUCK
C	-931.4				0.00	5596.87	0.0	0.0	COMB
C	-55385.3	14118.33	18269.30	1362.70	-33981.5	-5596.39	-0.8	961.2	
C	-1339.7				-34007.3	0.00	0.0	922.8	COMB
C	-931.4				0.00	-5596.87	0.0	0.0	COMB
E	54567.4	9399.84	14733.37	433.49	27996.23	3296.90	0.0	922.8	
E	-54567.4	9399.84	14733.37	433.49	-27996.2	-3296.90	0.0	922.8	
D	46541.3	12276.81	15678.47	1062.93	28285.29	4811.86	0.6	907.8	
D	-454.9				28288.71	0.00	0.0	922.8	COMB
D	-620.9				0.00	4811.38	0.0	0.0	COMB
D	-47783.1	12276.81	15678.47	1062.93	-29262.0	-4811.09	-0.6	948.8	
D	-787.0				-29272.2	0.00	0.0	922.8	COMB
D	-620.9				0.00	-4811.38	0.0	0.0	COMB
F	47449.9	8173.78	12811.63	288.99	24344.55	2866.87	0.0	922.8	
F	-47449.9	8173.78	12811.63	288.99	-24344.5	-2866.87	0.0	922.8	

Additional Design Data

M	periphery-O/-I [m2/m]	[m2/m]	deff [mm]	t-min [mm]	t-max [mm]	SMP [o/o]	thet-p [tm2/m]	thet-y [tm2/m]	thet-z [tm2/m]	thet-yz [tm2/m]
	6.687		48.7	32.0	52.9	0.0	0.678	0.647	0.031	
1	6.577		48.6	45.0	52.0	0.0	0.588	0.556	0.031	
25	0.106		1174.0			0.0	0.000	0.000		
**	0.004		32.0			0.0	0.000		0.000	

Cross section No. 275.5 = CS 30 - in-situ conc:C3

Cross section No. 276 - VFT (253)

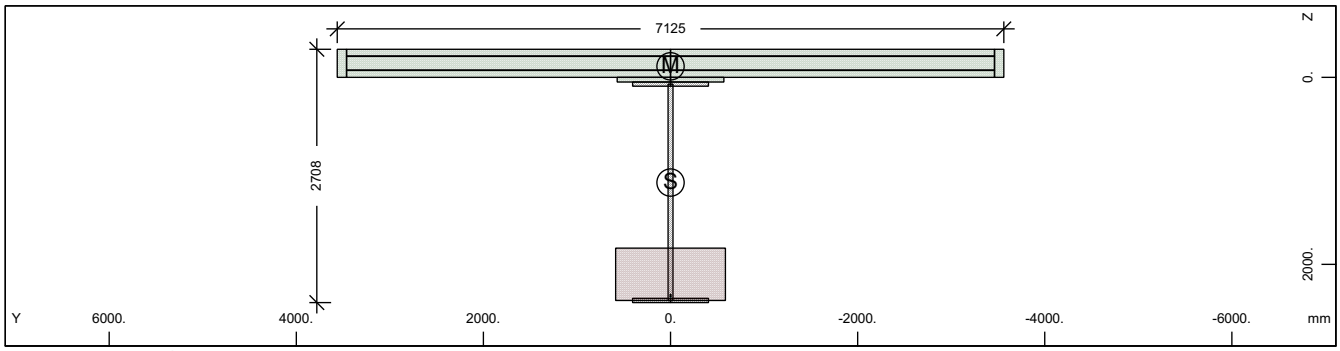

Cross section No. 276 - VFT (253)

Static properties of cross section

Mat NoR	A[cm2] It[cm4]	Ay/Az/Ayz [cm2]	Iy/Iz/Iyz [cm4]	ys/zs [mm]	y/z-sc [mm]	modules [N/mm2]	gam [kN/m]
1	2680.54	361.92	25396383.	0.0	0.0	210000	86.45
	6270.0	799.09	16961283.	1125.5	-117.6	80769	

Additional static properties of cross section

Alfa-T [1/°K]	ymin ymax [mm]	zmin zmax [mm]	hymin hzmin [mm]	AK AB [cm2]	MB	Tau-T Tau-B [1/m3]	Tau-Vy Tau-Vz [1/m2]
1.2E-05	-3562.5	-1425.5		4.421E+03		3.854E+00	3.367E+01
	3562.5	1283.0		2.851E+04		1.255E+02	1.754E+01

Section values for warping

Wmin[cm2]	Wmax[cm2]	CM[cm6]	CMS[cm4]	ASwyy[cm6]	ASwzz[cm6]	ry[mm]	rz[mm]
-10139.51	10139.51	1.367E+10	3048614.8	62.57	93.69	0.0	1634.6

SOFiSTiK AG - www.sofistik.de

Composite bridge 38+50+38, b=14.25m, 2x2HL1100R HISTAR460 , slab 0.30m C30/37

Partial cross sections

Mat NoR	A[cm2] It[cm4]	Ay/Az/Ayz [cm2]	Iy/Iz/Iyz [cm4]	ys/zs [mm]	modules [N/mm2]	gam [kN/m]
1	1932.02	0.12	15120210.	0.0	210000	15.17
	15763.9	526.05	398580.9	1229.2	80769	
25	6568.47		1713465.7	0.0	10667	16.42
	30177221.	48.13	0.0	2106.2	4444	
210	0.64	0.00	0.0	0.0	200000	0.00
	2.2	0.00	0.0	2336.0	76923	
31	21945.00	17809.89	170028.4	0.0	0	54.86
	6417251.4	12416.48	904880243.	-145.5	0	
300	434.98	379.89	24467.9	0.0	200000	0.00
	14.3	283.37	17390832.	-150.0	76923	

Design values of cross section

Mat NoR	A[cm2] It[cm4]	Ay/Az/Ayz [cm2]	Iy/Iz/Iyz [cm4]	ys/zs [mm]	modules [N/mm2]	gam [kN/m]
1	2602.69	361.92	24604876.	0.0	182609	86.45
	6270.0	797.96	16961281.	1096.2	70234	

Design forces and moments
(C/E = characteristic plastic/elastic, D=plast.Design, F=elast. Design)

	N[kN]	Vy[kN]	Vz[kN]	Mt[kNm]	My[kNm]	Mz[kNm]	y[mm]	z[mm]	BUCK
C	86504.0	62884.49	63368.14	105878.5	91544.47	103334.2	26.0	-98.8	c c
C	-83937.4				163199.2	0.00	0.0	1125.	COMB
C	-42770.2				0.00	103377.8	0.0	0.0	COMB
C	-160134.	62884.49	63368.14	105878.5	-98815.3	-102822.	-26.0	1171.	
C	-1603.0				-98852.2	0.00	0.0	1125.	COMB
C	-42770.2				0.00	-103378.	0.0	0.0	COMB
E	89798.0	8572.73	16458.59	4281.56	66311.82	25711.89	0.0	1125.	
E	-89798.0	8572.73	16458.59	4281.56	-66311.8	-25711.9	0.0	1125.	
D	75220.8	47335.36	47596.38	70791.87	78396.77	77647.48	20.0	-37.6	
D	-59631.2				124935.2	0.00	0.0	1125.	COMB
D	-28513.5				0.00	77669.77	0.0	0.0	COMB
D	-124308.	47335.36	47596.38	70791.85	-81925.3	-77384.6	-20.0	1040.	
D	2604.3				-82037.2	0.00	0.0	1125.	COMB
D	-28513.5				0.00	-77669.8	0.0	0.0	COMB
F	78085.2	7454.55	14311.82	2854.38	57662.45	22358.17	0.0	1125.	
F	-78085.2	7454.55	14311.82	2854.38	-57662.4	-22358.2	0.0	1125.	

Additional Design Data

M	periphery-O/-I [m2/m]	[m2/m]	deff [mm]	t-min [mm]	t-max [mm]	SMP [o/o]	thet-p [tm2/m]	thet-y [tm2/m]	thet-z [tm2/m]	thet-yz [tm2/m]
	53.226		10.1	3.1	559.5	0.0	31.211	8.558	22.653	
1	7.867		49.1	45.0	52.0	0.0	1.218	1.187	0.031	
25	1.119		1174.0			0.0	0.043	0.043		
**	0.004		32.0			0.0	0.000		0.000	
31	16.530		265.5	50.0	300.0	0.0	22.626	0.004	22.622	
**	27.706		3.1	3.1	3.1	0.0	0.000	0.000	0.000	

SOFiSTiK AG - www.sofistik.de

Composite bridge 38+50+38, b=14.25m, 2x2HL1100R HISTAR460 , slab 0.30m C30/37

Cross section No. 276.1 = CS 1 - steel alone

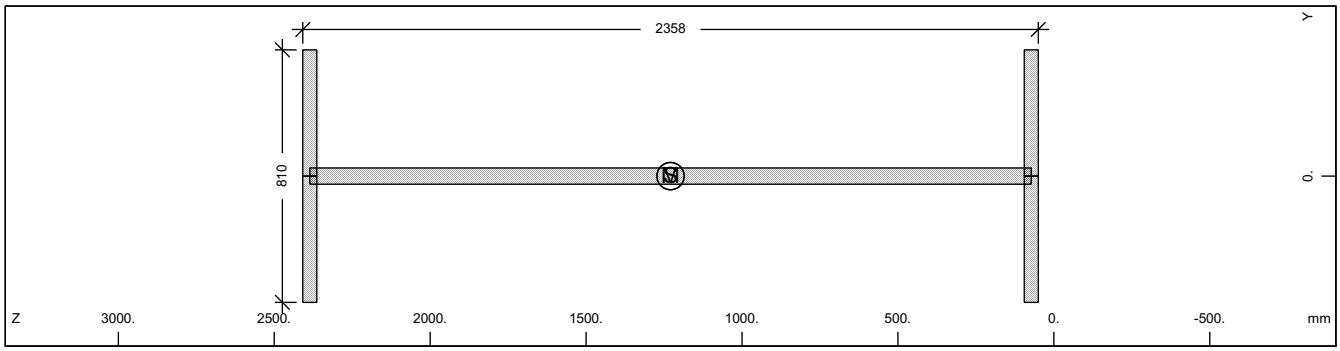

Cross section No. 276

Static properties of cross section

Mat / NoR	A[cm2] / It[cm4]	Ay/Az/Ayz [cm2]	Iy/Iz/Iyz [cm4]	ys/zs [mm]	modules [N/mm2]	gam [kN/m]
1	1932.02	607.50	15120210.	0.0	210000	15.17
	6270.0	1142.19	398580.9	1229.2	80769	

Additional static properties of cross section

Alfa-T [1/°K]	ymin / ymax [mm]	zmin / zmax [mm]	hymin / hzmin [mm]	AK / AB [cm2]	MB	Tau-T / Tau-B [1/m3]	Tau-Vy / Tau-Vz [1/m2]
1.2E-05	-405.0	-1179.2		1.166E+03		3.299E+02	2.058E+01
	405.0	1179.2				1.255E+02	9.787E+00

Section values for warping

Wmin[cm2]	Wmax[cm2]	CM[cm6]	CMS[cm4]	ASwyy[cm6]	ASwzz[cm6]	ry[mm]	rz[mm]
-4684.83	4684.835333269968.		8128743.7	-0.80	-30.27	0.0	0.0

Design values of cross section

Mat / NoR	A[cm2] / It[cm4]	Ay/Az/Ayz [cm2]	Iy/Iz/Iyz [cm4]	ys/zs [mm]	modules [N/mm2]	gam [kN/m]
1	1932.02	607.50	15120210.	0.0	182609	15.17
	6270.0	1142.19	398580.9	1229.2	70234	

Design forces and moments
(C/E = characteristic plastic/elastic, D=plast.Design, F=elast. Design)

	N[kN]	Vy[kN]	Vz[kN]	Mt[kNm]	My[kNm]	Mz[kNm]	y[mm]	z[mm]	BUCK
C	64722.6	14099.76	23267.84	922.21	51558.60	5469.27	0.0	1229.	c c
C	0.0				0.00	0.00	0.0	0.0	COMB
E	64722.6	9399.84	19761.46	586.34	42953.41	3296.90	0.0	1229.	
D	56280.5	12260.66	20232.91	801.92	44833.57	4755.89	0.0	1229.	
D	0.0				0.00	0.00	0.0	0.0	COMB
F	56280.5	8173.78	17183.88	509.86	37350.79	2866.87	0.0	1229.	

Additional Design Data

M	periphery-O/-I [m2/m]	[m2/m]	deff [mm]	t-min [mm]	t-max [mm]	SMP [o/o]	thet-p [tm2/m]	thet-y [tm2/m]	thet-z [tm2/m]	thet-yz [tm2/m]
	7.867		49.1	45.0	52.0	0.0	1.218	1.187	0.031	

SOFiSTiK AG - www.sofistik.de

Composite bridge 38+50+38, b=14.25m, 2x2HL1100R HISTAR460 , slab 0.30m C30/37

Cross section No. 276.2 = CS 10 - prefab. slab C1

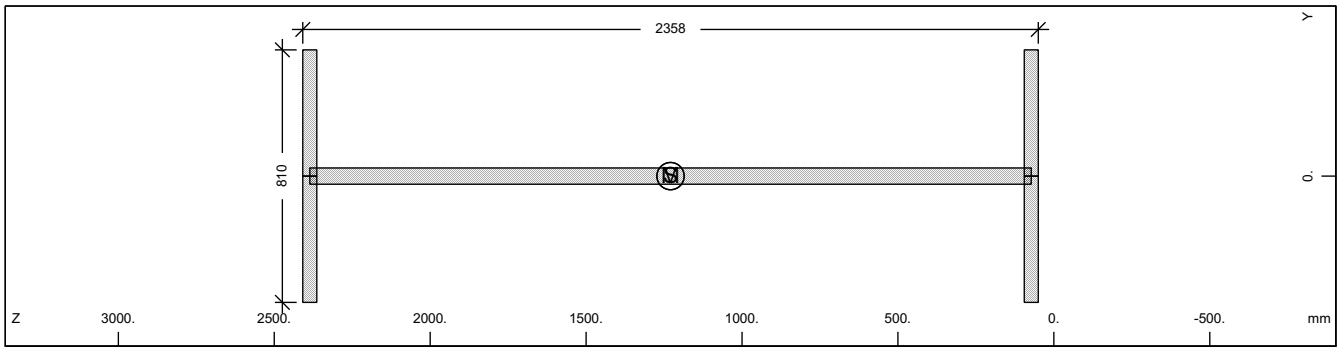

Cross section No. 276

Static properties of cross section

Mat NoR	A[cm2] It[cm4]	Ay/Az/Ayz [cm2]	Iy/Iz/Iyz [cm4]	ys/zs [mm]	modules [N/mm2]	gam [kN/m]
1	1932.02	607.50	15120210.	0.0	210000	15.17
	6270.0	1142.19	398580.9	1229.2	80769	

Additional static properties of cross section

Alfa-T [1/°K]	ymin ymax [mm]	zmin zmax [mm]	hymin hzmin [mm]	AK AB [cm2]	MB	Tau-T Tau-B [1/m3]	Tau-Vy Tau-Vz [1/m2]
1.2E-05	-405.0	-1179.2		1.166E+03		3.299E+02	2.058E+01
	405.0	1179.2				1.255E+02	9.787E+00

Section values for warping

Wmin[cm2]	Wmax[cm2]	CM[cm6]	CMS[cm4]	ASwyy[cm6]	ASwzz[cm6]	ry[mm]	rz[mm]
-4684.83	4684.835333269968.		8128743.7	-0.80	-30.27	0.0	0.0

Design values of cross section

Mat NoR	A[cm2] It[cm4]	Ay/Az/Ayz [cm2]	Iy/Iz/Iyz [cm4]	ys/zs [mm]	modules [N/mm2]	gam [kN/m]
1	1932.02	607.50	15120210.	0.0	182609	15.17
	6270.0	1142.19	398580.9	1229.2	70234	

Design forces and moments
(C/E = characteristic plastic/elastic, D=plast.Design, F=elast. Design)

	N[kN]	Vy[kN]	Vz[kN]	Mt[kNm]	My[kNm]	Mz[kNm]	y[mm]	z[mm]	BUCK
C	64722.6	14099.76	23267.84	922.21	51558.60	5469.27	0.0	1229.	c c
C	0.0				0.00	0.00	0.0	0.0	COMB
E	64722.6	9399.84	19761.46	586.34	42953.41	3296.90	0.0	1229.	
D	56280.5	12260.66	20232.91	801.92	44833.57	4755.89	0.0	1229.	
D	0.0				0.00	0.00	0.0	0.0	COMB
F	56280.5	8173.78	17183.88	509.86	37350.79	2866.87	0.0	1229.	

Additional Design Data

M	periphery-O/-I [m2/m] [m2/m]	deff [mm]	t-min [mm]	t-max [mm]	SMP [o/o]	thet-p [tm2/m]	thet-y [tm2/m]	thet-z [tm2/m]	thet-yz [tm2/m]
	7.867	49.1	45.0	52.0	0.0	1.218	1.187	0.031	

SOFiSTiK AG - www.sofistik.de

Composite bridge 38+50+38, b=14.25m, 2x2HL1100R HISTAR460 , slab 0.30m C30/37

Cross section No. 276.3 = CS 20 - in-situ conc:C2

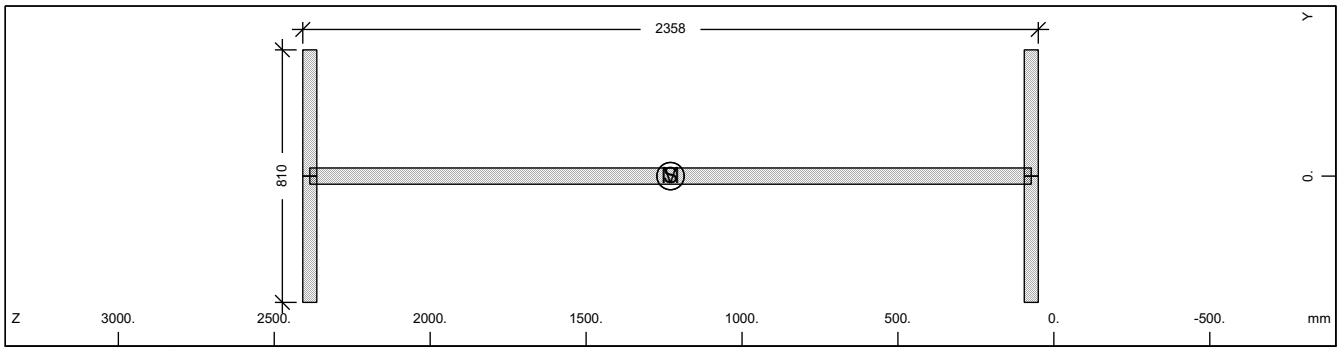

Cross section No. 276

Static properties of cross section

Mat NoR	A[cm2] It[cm4]	Ay/Az/Ayz [cm2]	Iy/Iz/Iyz [cm4]	ys/zs [mm]	modules [N/mm2]	gam [kN/m]
1	1932.02	607.50	15120210.	0.0	210000	15.17
	6270.0	1142.19	398580.9	1229.2	80769	

Additional static properties of cross section

Alfa-T [1/°K]	ymin ymax [mm]	zmin zmax [mm]	hymin hzmin [mm]	AK AB [cm2]	MB	Tau-T Tau-B [1/m3]	Tau-Vy Tau-Vz [1/m2]
1.2E-05	-405.0	-1179.2		1.166E+03		3.299E+02	2.058E+01
	405.0	1179.2				1.255E+02	9.787E+00

Section values for warping

Wmin[cm2]	Wmax[cm2]	CM[cm6]	CMS[cm4]	ASwyy[cm6]	ASwzz[cm6]	ry[mm]	rz[mm]
-4684.83	4684.835333269968.		8128743.7	-0.80	-30.27	0.0	0.0

Design values of cross section

Mat NoR	A[cm2] It[cm4]	Ay/Az/Ayz [cm2]	Iy/Iz/Iyz [cm4]	ys/zs [mm]	modules [N/mm2]	gam [kN/m]
1	1932.02	607.50	15120210.	0.0	182609	15.17
	6270.0	1142.19	398580.9	1229.2	70234	

Design forces and moments
(C/E = characteristic plastic/elastic, D=plast.Design, F=elast. Design)

	N[kN]	Vy[kN]	Vz[kN]	Mt[kNm]	My[kNm]	Mz[kNm]	y[mm]	z[mm]	BUCK
C	64722.6	14099.76	23267.84	922.21	51558.60	5469.27	0.0	1229.	c c
C	0.0				0.00	0.00	0.0	0.0	COMB
E	64722.6	9399.84	19761.46	586.34	42953.41	3296.90	0.0	1229.	
D	56280.5	12260.66	20232.91	801.92	44833.57	4755.89	0.0	1229.	
D	0.0				0.00	0.00	0.0	0.0	COMB
F	56280.5	8173.78	17183.88	509.86	37350.79	2866.87	0.0	1229.	

Additional Design Data

M	periphery-O/-I [m2/m] [m2/m]	deff [mm]	t-min [mm]	t-max [mm]	SMP [o/o]	thet-p [tm2/m]	thet-y [tm2/m]	thet-z [tm2/m]	thet-yz [tm2/m]
	7.867	49.1	45.0	52.0	0.0	1.218	1.187	0.031	

SOFiSTiK AG - www.sofistik.de

Composite bridge 38+50+38, b=14.25m, 2x2HL1100R HISTAR460 , slab 0.30m C30/37

Cross section No. 276.4 = CS 21 - reinf active:C2

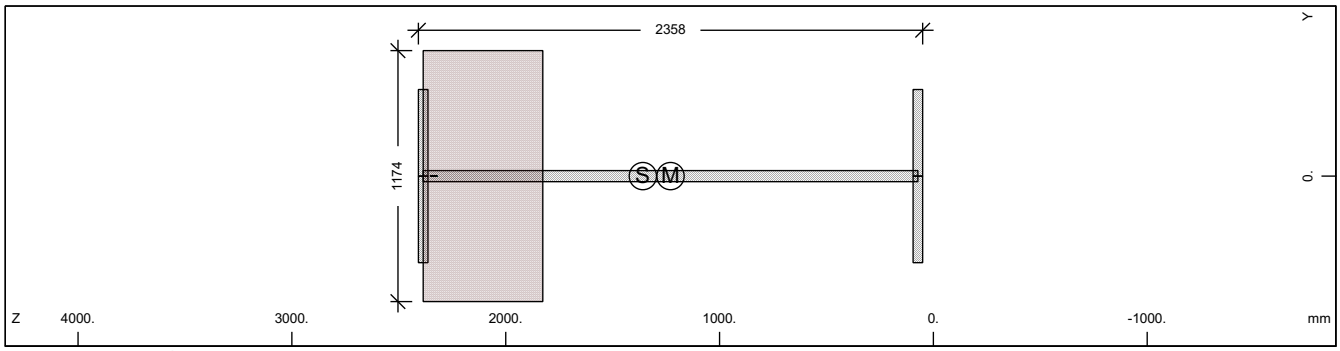

Cross section No. 276

Static properties of cross section

Mat NoR	A[cm2] It[cm4]	Ay/Az/Ayz [cm2]	Iy/Iz/Iyz [cm4]	ys/zs [mm]	modules [N/mm2]	gam [kN/m]
1	2266.27	607.50	17401311.	0.0	210000	31.59
	6270.0	1072.78	398580.9	1358.7	80769	

Additional static properties of cross section

Alfa-T [1/°K]	ymin ymax [mm]	zmin zmax [mm]	hymin hzmin [mm]	AK AB [cm2]	MB	Tau-T Tau-B [1/m3]	Tau-Vy Tau-Vz [1/m2]
1.2E-05	-587.0	-1308.7		4.421E+03		3.854E+00	2.058E+01
	587.0	1049.8		6.568E+03		1.255E+02	9.934E+00

Section values for warping

Wmin[cm2]	Wmax[cm2]	CM[cm6]	CMS[cm4]	ASwyy[cm6]	ASwzz[cm6]	ry[mm]	rz[mm]
-4684.83	4684.835333269968.		8128744.4	5.31	231.76	0.0	7.8

Partial cross sections

Mat NoR	A[cm2] It[cm4]	Ay/Az/Ayz [cm2]	Iy/Iz/Iyz [cm4]	ys/zs [mm]	modules [N/mm2]	gam [kN/m]
1	1932.02	607.50	15120210.	0.0	210000	15.17
	15763.9	1067.14	398580.9	1229.2	80769	
25	6568.47		1713465.7	0.0	10667	16.42
	30177221.	102.58	0.0	2106.2	4444	
210	0.64	0.00	0.0	0.0	200000	0.00
	2.2	0.00	0.0	2336.0	76923	

Design values of cross section

Mat NoR	A[cm2] It[cm4]	Ay/Az/Ayz [cm2]	Iy/Iz/Iyz [cm4]	ys/zs [mm]	modules [N/mm2]	gam [kN/m]
1	2188.42	607.50	16930437.	0.0	182609	31.59
	6270.0	1071.46	398580.9	1332.1	70234	

Design forces and moments
(C/E = characteristic plastic/elastic, D=plast.Design, F=elast. Design)

	N[kN]	Vy[kN]	Vz[kN]	Mt[kNm]	My[kNm]	Mz[kNm]	y[mm]	z[mm]	BUCK
C	64754.7	14118.33	34567.70	7291.79	51594.17	8450.68	6.0	1230.	c c
C	-4476.5				51881.75	0.00	0.0	1359.	COMB
C	-9852.7				0.00	8361.30	0.0	0.0	COMB
C	-84460.2	14118.33	34567.70	7291.79	-55827.3	-8331.50	-6.0	1706.	
C	-15228.9				-66613.3	0.00	0.0	1359.	COMB
C	-9852.7				0.00	-8361.30	0.0	0.0	COMB
E	75919.9	9399.84	19469.72	4281.53	44545.20	3296.90	0.0	1359.	
E	-75919.9	9399.84	19469.72	4281.53	-44545.2	-3296.90	0.0	1359.	
D	56308.5	12276.81	27859.86	5049.87	44864.50	6729.75	4.6	1230.	
D	-3892.6				45114.57	0.00	0.0	1359.	COMB
D	-6568.5				0.00	6683.96	0.0	0.0	COMB
D	-69445.4	12276.81	27859.86	5049.87	-47285.3	-6668.69	-4.6	1625.	
D	-9244.3				-54935.6	0.00	0.0	1359.	COMB
D	-6568.5				0.00	-6683.96	0.0	0.0	COMB

SOFiSTiK AG - www.sofistik.de

Composite bridge 38+50+38, b=14.25m, 2x2HL1100R HISTAR460 , slab 0.30m C30/37

Design forces and moments
(C/E = characteristic plastic/elastic, D=plast.Design, F=elast. Design)

	N[kN]	Vy[kN]	Vz[kN]	Mt[kNm]	My[kNm]	Mz[kNm]	y[mm]	z[mm]	BUCK
F	66017.3	8173.78	16930.20	2854.35	38734.95	2866.87	0.0	1359.	
F	-66017.3	8173.78	16930.20	2854.35	-38735.0	-2866.87	0.0	1359.	

Additional Design Data

M	periphery-O/-I [m2/m]	[m2/m]	deff [mm]	t-min [mm]	t-max [mm]	SMP [o/o]	thet-p [tm2/m]	thet-y [tm2/m]	thet-z [tm2/m]	thet-yz [tm2/m]
	8.990		50.4	32.0	559.5	0.0	1.867	1.836	0.031	
1	7.867		49.1	45.0	52.0	0.0	1.218	1.187	0.031	
25	1.119		1174.0			0.0	0.043	0.043		
**	0.004		32.0			0.0	0.000		0.000	

Cross section No. 276.5 = CS 30 - in-situ conc:C3

Cross section No. 277 - VFT (253)

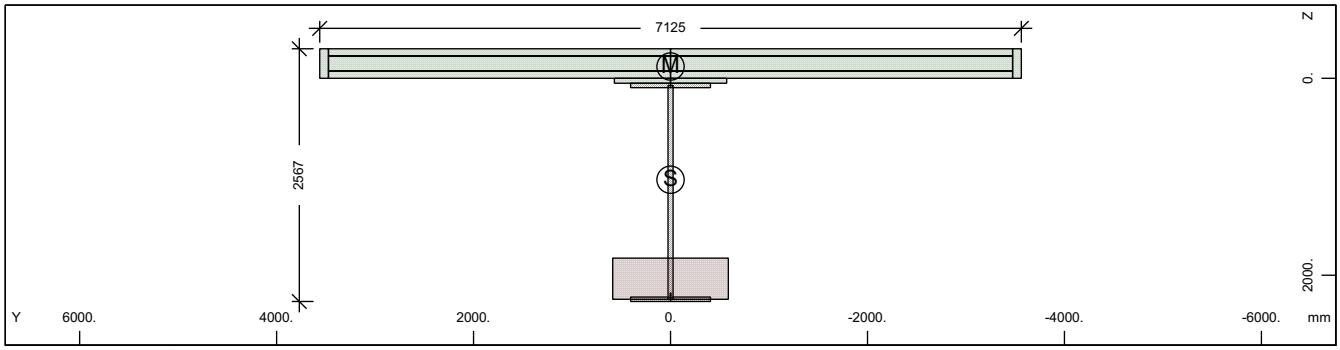

Cross section No. 277 - VFT (253)

Static properties of cross section

Mat NoR	A[cm2] It[cm4]	Ay/Az/Ayz [cm2]	Iy/Iz/Iyz [cm4]	ys/zs [mm]	y/z-sc [mm]	modules [N/mm2]	gam [kN/m]
1	2523.85	362.89	21718598.	0.0	0.0	210000	81.72
	6270.0	736.88	17116022.	1029.9	-119.5	80769	

Additional static properties of cross section

Alfa-T [1/°K]	ymin ymax [mm]	zmin zmax [mm]	hymin hzmin [mm]	AK AB [cm2]	MB	Tau-T Tau-B [1/m3]	Tau-Vy Tau-Vz [1/m2]
1.2E-05	-3562.5	-1329.9		3.311E+03		5.145E+00	3.358E+01
	3562.5	1237.1		2.685E+04		1.255E+02	1.912E+01

Section values for warping

Wmin[cm2]	Wmax[cm2]	CM[cm6]	CMS[cm4]	ASwyy[cm6]	ASwzz[cm6]	ry[mm]	rz[mm]
-9574.23	9574.23	1.231E+10	2513931.5	157.02	199.24	0.0	1430.5

Partial cross sections

Mat NoR	A[cm2] It[cm4]	Ay/Az/Ayz [cm2]	Iy/Iz/Iyz [cm4]	ys/zs [mm]	modules [N/mm2]	gam [kN/m]
1	1858.43	0.12	13037682.	0.0	210000	14.59
	15100.7	463.78	398580.9	1158.5	80769	
25	4907.07		714410.8	0.0	10667	12.27
	22544302.	25.52	0.0	2035.5	4444	
210	0.64	0.00	0.0	0.0	200000	0.00
	2.2	0.00	0.0	2194.5	76923	
31	21945.00	17582.95	170028.4	0.0	0	54.86
	6417251.4	12354.00	904880243.	-145.5	0	
300	436.33	380.91	24543.8	0.0	200000	0.00
	14.3	284.74	17553309.	-150.0	76923	

SOFiSTiK AG - www.sofistik.de

Composite bridge 38+50+38, b=14.25m, 2x2HL1100R HISTAR460 , slab 0.30m C30/37

Design values of cross section

Mat NoR	A[cm2] It[cm4]	Ay/Az/Ayz [cm2]	Iy/Iz/Iyz [cm4]	ys/zs [mm]	modules [N/mm2]	gam [kN/m]
1	2465.69	362.89	21108167.	0.0	182609	81.72
	6270.0	736.04	17116022.	1006.2	70234	

Design forces and moments
(C/E = characteristic plastic/elastic, D=plast.Design, F=elast. Design)

	N[kN]	Vy[kN]	Vz[kN]	Mt[kNm]	My[kNm]	Mz[kNm]	y[mm]	z[mm]	BUCK
C	84106.3	62923.47	59203.53	104232.4	84891.08	102719.9	26.9	-50.6	c c
C	-83139.7				150513.1	0.00	0.0	1030.	COMB
C	-40278.1				0.00	102848.5	0.0	0.0	COMB
C	-154043.	62923.47	59203.54	104232.4	-87840.9	-102324.	-26.9	955.9	
C	2583.5				-87936.7	0.00	0.0	1030.	COMB
C	-40278.1				0.00	-102849.	0.0	0.0	COMB
E	84548.8	8597.48	15100.44	3207.10	58814.04	25866.16	0.0	1030.	
E	-84548.8	8597.48	15100.44	3207.10	-58814.0	-25866.2	0.0	1030.	
D	73135.9	47369.26	44531.18	69686.97	71836.11	77285.61	20.0	-53.0	
D	-58937.6				115180.7	0.00	0.0	1030.	COMB
D	-26852.1				0.00	77357.93	0.0	0.0	COMB
D	-119760.	47369.26	44531.18	69686.96	-73011.1	-77089.0	-20.0	857.3	
D	5233.4				-73463.1	0.00	0.0	1030.	COMB
D	-26852.1				0.00	-77357.9	0.0	0.0	COMB
F	73520.7	7476.07	13130.81	2138.07	51142.64	22492.31	0.0	1030.	
F	-73520.7	7476.07	13130.81	2138.07	-51142.6	-22492.3	0.0	1030.	

Additional Design Data

M	periphery-O/-I [m2/m]	[m2/m]	deff [mm]	t-min [mm]	t-max [mm]	SMP [o/o]	thet-p [tm2/m]	thet-y [tm2/m]	thet-z [tm2/m]	thet-yz [tm2/m]
	52.746		9.6	3.1	418.0	0.0	29.450	6.797	22.653	
1	7.584		49.0	45.0	52.0	0.0	1.055	1.023	0.031	
25	0.836		1174.0			0.0	0.018	0.018		
**	0.004		32.0			0.0	0.000		0.000	
31	16.530		265.5	50.0	300.0	0.0	22.626	0.004	22.622	
**	27.792		3.1	3.1	3.1	0.0	0.000	0.000	0.000	

Cross section No. 277.1 = CS 1 - steel alone

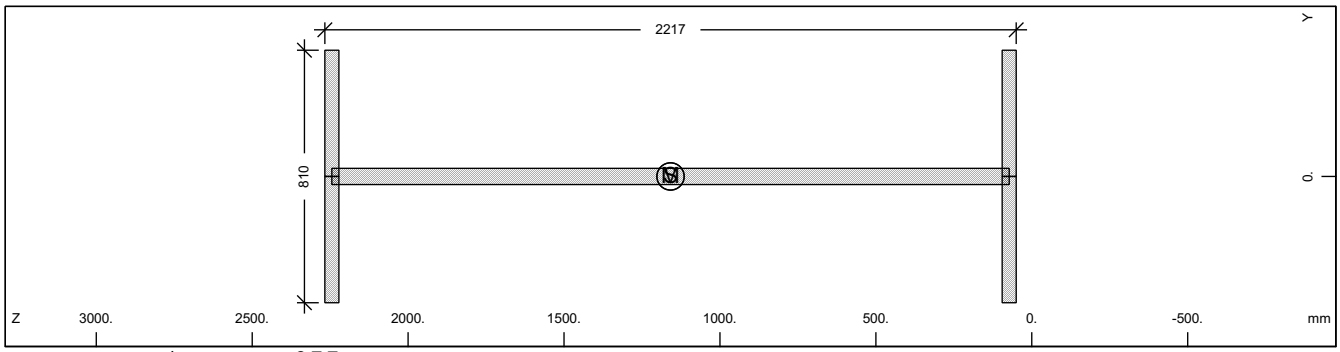

Cross section No. 277

Static properties of cross section

Mat NoR	A[cm2] It[cm4]	Ay/Az/Ayz [cm2]	Iy/Iz/Iyz [cm4]	ys/zs [mm]	modules [N/mm2]	gam [kN/m]
1	1858.43	607.50	13037682.	0.0	210000	14.59
	6270.0	1071.13	398580.9	1158.5	80769	

Additional static properties of cross section

Alfa-T [1/°K]	ymin ymax [mm]	zmin zmax [mm]	hymin hzmin [mm]	AK AB [cm2]	MB	Tau-T Tau-B [1/m3]	Tau-Vy Tau-Vz [1/m2]
1.2E-05	-405.0	-1108.5		1.117E+03		3.444E+02	2.058E+01
	405.0	1108.5				1.255E+02	1.036E+01

SOFiSTiK AG - www.sofistik.de

Composite bridge 38+50+38, b=14.25m, 2x2HL1100R HISTAR460 , slab 0.30m C30/37

Section values for warping

Wmin[cm2]	Wmax[cm2]	CM[cm6]	CMS[cm4]	ASwyy[cm6]	ASwzz[cm6]	ry[mm]	rz[mm]
-4398.26	4398.264	700752460.	7164687.7	-4.99	-163.29	0.0	0.0

Design values of cross section

Mat NoR	A[cm2] It[cm4]	Ay/Az/Ayz [cm2]	Iy/Iz/Iyz [cm4]	ys/zs [mm]	modules [N/mm2]	gam [kN/m]
1	1858.43	607.50	13037682.	0.0	182609	14.59
	6270.0	1071.13	398580.9	1158.5	70234	

Design forces and moments
(C/E = characteristic plastic/elastic, D=plast.Design, F=elast. Design)

	N[kN]	Vy[kN]	Vz[kN]	Mt[kNm]	My[kNm]	Mz[kNm]	y[mm]	z[mm]	BUCK
C	62257.4	14099.76	21844.55	885.20	47066.15	5437.22	0.0	1158.	c c
C	0.0				0.00	0.00	0.0	0.0	COMB
E	62257.4	9399.84	18666.12	561.66	39401.59	3296.90	0.0	1158.	
D	54136.8	12260.66	18995.26	769.74	40927.09	4728.02	0.0	1158.	
D	0.0				0.00	0.00	0.0	0.0	COMB
F	54136.8	8173.78	16231.41	488.40	34262.25	2866.87	0.0	1158.	

Additional Design Data

M	periphery-O/-I [m2/m]	[m2/m]	deff [mm]	t-min [mm]	t-max [mm]	SMP [o/o]	thet-p [tm2/m]	thet-y [tm2/m]	thet-z [tm2/m]	thet-yz [tm2/m]
	7.584		49.0	45.0	52.0	0.0	1.055	1.023	0.031	

Cross section No. 277.2 = CS 10 - prefab. slab C1

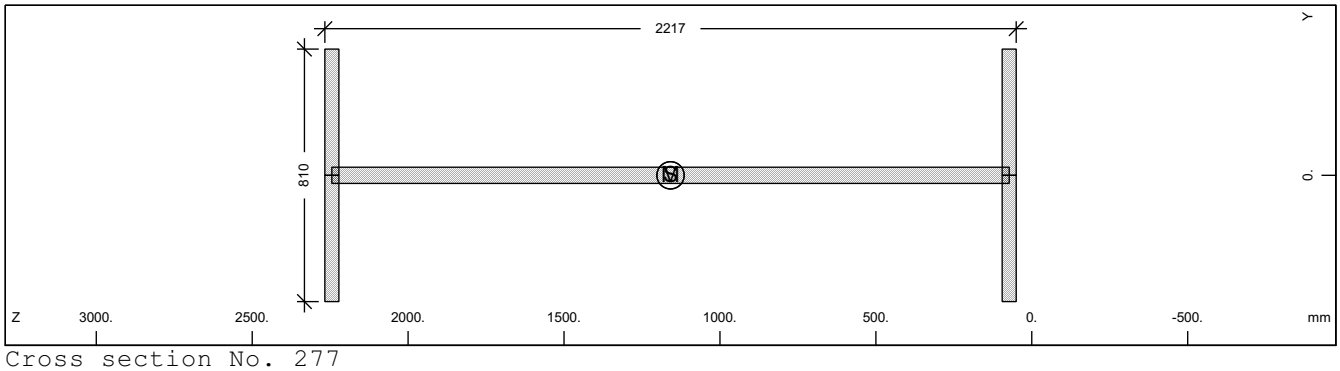

Cross section No. 277

Static properties of cross section

Mat NoR	A[cm2] It[cm4]	Ay/Az/Ayz [cm2]	Iy/Iz/Iyz [cm4]	ys/zs [mm]	modules [N/mm2]	gam [kN/m]
1	1858.43	607.50	13037682.	0.0	210000	14.59
	6270.0	1071.13	398580.9	1158.5	80769	

Additional static properties of cross section

Alfa-T [1/°K]	ymin ymax [mm]	zmin zmax [mm]	hymin hzmin [mm]	AK AB [cm2]	MB	Tau-T Tau-B [1/m3]	Tau-Vy Tau-Vz [1/m2]
1.2E-05	-405.0	-1108.5		1.117E+03		3.444E+02	2.058E+01
	405.0	1108.5				1.255E+02	1.036E+01

Section values for warping

Wmin[cm2]	Wmax[cm2]	CM[cm6]	CMS[cm4]	ASwyy[cm6]	ASwzz[cm6]	ry[mm]	rz[mm]
-4398.26	4398.264	700752460.	7164687.7	-4.99	-163.29	0.0	0.0

Design values of cross section

Mat NoR	A[cm2] It[cm4]	Ay/Az/Ayz [cm2]	Iy/Iz/Iyz [cm4]	ys/zs [mm]	modules [N/mm2]	gam [kN/m]
1	1858.43	607.50	13037682.	0.0	182609	14.59
	6270.0	1071.13	398580.9	1158.5	70234	

SOFiSTiK AG - www.sofistik.de

Composite bridge 38+50+38, b=14.25m, 2x2HL1100R HISTAR460 , slab 0.30m C30/37

Design forces and moments
(C/E = characteristic plastic/elastic, D=plast.Design, F=elast. Design)

	N[kN]	Vy[kN]	Vz[kN]	Mt[kNm]	My[kNm]	Mz[kNm]	y[mm]	z[mm]	BUCK
C	62257.4	14099.76	21844.55	885.20	47066.15	5437.22	0.0	1158.	c c
C	0.0				0.00	0.00	0.0	0.0	COMB
E	62257.4	9399.84	18666.12	561.66	39401.59	3296.90	0.0	1158.	
D	54136.8	12260.66	18995.26	769.74	40927.09	4728.02	0.0	1158.	
D	0.0				0.00	0.00	0.0	0.0	COMB
F	54136.8	8173.78	16231.41	488.40	34262.25	2866.87	0.0	1158.	

Additional Design Data

M	periphery-O/-I [m2/m]	[m2/m]	deff [mm]	t-min [mm]	t-max [mm]	SMP [o/o]	thet-p [tm2/m]	thet-y [tm2/m]	thet-z [tm2/m]	thet-yz [tm2/m]
	7.584		49.0	45.0	52.0	0.0	1.055	1.023	0.031	

Cross section No. 277.3 = CS 20 - in-situ conc:C2

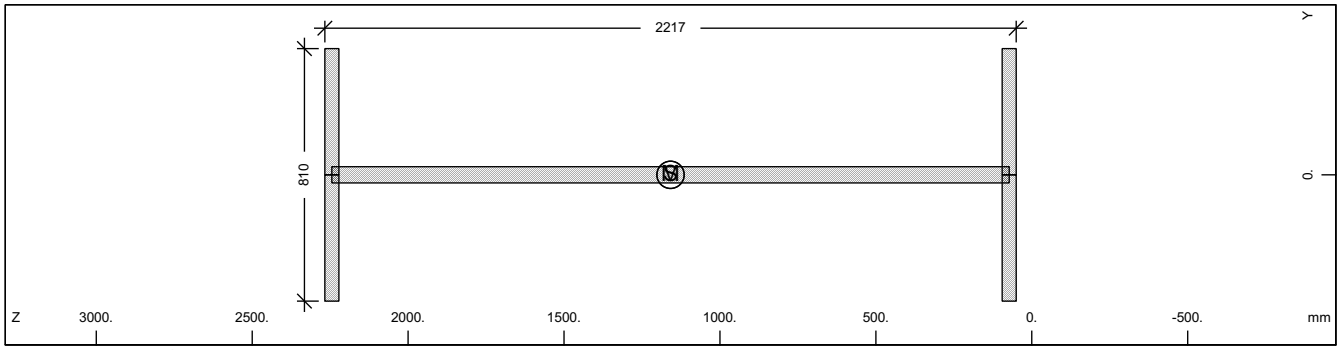

Cross section No. 277

Static properties of cross section

Mat NoR	A[cm2] It[cm4]	Ay/Az/Ayz [cm2]	Iy/Iz/Iyz [cm4]	ys/zs [mm]	modules [N/mm2]	gam [kN/m]
1	1858.43	607.50	13037682.	0.0	210000	14.59
	6270.0	1071.13	398580.9	1158.5	80769	

Additional static properties of cross section

Alfa-T [1/°K]	ymin ymax [mm]	zmin zmax [mm]	hymin hzmin [mm]	AK AB [cm2]	MB	Tau-T Tau-B [1/m3]	Tau-Vy Tau-Vz [1/m2]
1.2E-05	-405.0	-1108.5		1.117E+03		3.444E+02	2.058E+01
	405.0	1108.5				1.255E+02	1.036E+01

Section values for warping

Wmin[cm2]	Wmax[cm2]	CM[cm6]	CMS[cm4]	ASwyy[cm6]	ASwzz[cm6]	ry[mm]	rz[mm]
-4398.26	4398.264700752460.		7164687.7	-4.99	-163.29	0.0	0.0

Design values of cross section

Mat NoR	A[cm2] It[cm4]	Ay/Az/Ayz [cm2]	Iy/Iz/Iyz [cm4]	ys/zs [mm]	modules [N/mm2]	gam [kN/m]
1	1858.43	607.50	13037682.	0.0	182609	14.59
	6270.0	1071.13	398580.9	1158.5	70234	

Design forces and moments
(C/E = characteristic plastic/elastic, D=plast.Design, F=elast. Design)

	N[kN]	Vy[kN]	Vz[kN]	Mt[kNm]	My[kNm]	Mz[kNm]	y[mm]	z[mm]	BUCK
C	62257.4	14099.76	21844.55	885.20	47066.15	5437.22	0.0	1158.	c c
C	0.0				0.00	0.00	0.0	0.0	COMB
E	62257.4	9399.84	18666.12	561.66	39401.59	3296.90	0.0	1158.	
D	54136.8	12260.66	18995.26	769.74	40927.09	4728.02	0.0	1158.	
D	0.0				0.00	0.00	0.0	0.0	COMB
F	54136.8	8173.78	16231.41	488.40	34262.25	2866.87	0.0	1158.	

SOFiSTiK AG - www.sofistik.de

Composite bridge 38+50+38, b=14.25m, 2x2HL1100R HISTAR460 , slab 0.30m C30/37

Additional Design Data

M	periphery-O/-I [m2/m]	[m2/m]	deff [mm]	t-min [mm]	t-max [mm]	SMP [o/o]	thet-p [tm2/m]	thet-y [tm2/m]	thet-z [tm2/m]	thet-yz [tm2/m]
	7.584		49.0	45.0	52.0	0.0	1.055	1.023	0.031	

Cross section No. 277.4 = CS 21 - reinf active:C2

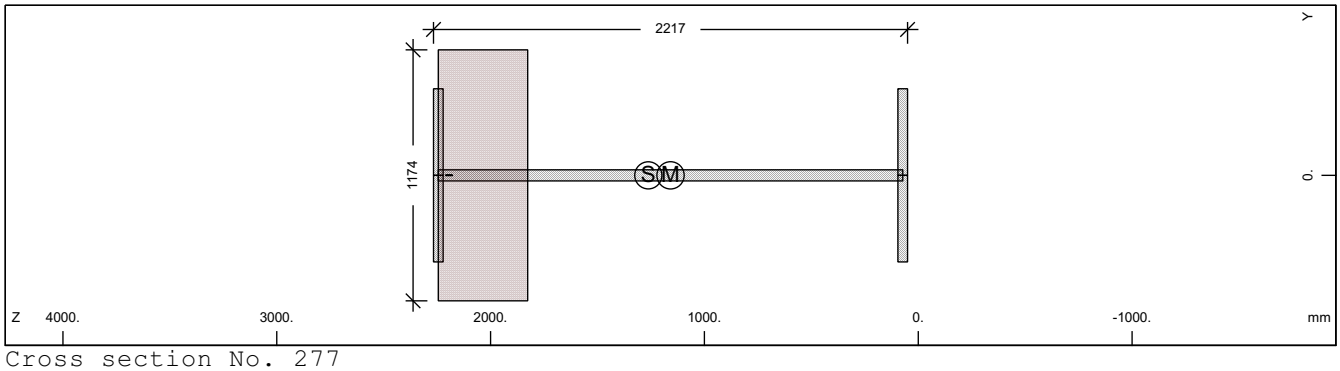

Cross section No. 277

Static properties of cross section

Mat NoR	A[cm2] It[cm4]	Ay/Az/Ayz [cm2]	Iy/Iz/Iyz [cm4]	ys/zs [mm]	modules [N/mm2]	gam [kN/m]
1	2108.29	607.50	14769624.	0.0	210000	26.86
	6270.0	1027.68	398580.9	1262.5	80769	

Additional static properties of cross section

Alfa-T [1/°K]	ymin ymax [mm]	zmin zmax [mm]	hymin hzmin [mm]	AK AB [cm2]	MB	Tau-T Tau-B [1/m3]	Tau-Vy Tau-Vz [1/m2]
1.2E-05	-587.0	-1212.5		3.311E+03		5.145E+00	2.058E+01
	587.0	1004.5		4.907E+03		1.255E+02	1.044E+01

Section values for warping

Wmin[cm2]	Wmax[cm2]	CM[cm6]	CMS[cm4]	ASwyy[cm6]	ASwzz[cm6]	ry[mm]	rz[mm]
-4398.26	4398.264	700752460.	7164687.7	-2.05	-76.01	0.0	12.4

Partial cross sections

Mat NoR	A[cm2] It[cm4]	Ay/Az/Ayz [cm2]	Iy/Iz/Iyz [cm4]	ys/zs [mm]	modules [N/mm2]	gam [kN/m]
1	1858.43	607.50	13037682.	0.0	210000	14.59
	15100.7	1024.30	398580.9	1158.5	80769	
25	4907.07		714410.8	0.0	10667	12.27
	22544302.	61.44	0.0	2035.5	4444	
210	0.64	0.00	0.0	0.0	200000	0.00
	2.2	0.00	0.0	2194.5	76923	

Design values of cross section

Mat NoR	A[cm2] It[cm4]	Ay/Az/Ayz [cm2]	Iy/Iz/Iyz [cm4]	ys/zs [mm]	modules [N/mm2]	gam [kN/m]
1	2050.13	607.50	14403774.	0.0	182609	26.86
	6270.0	1026.89	398580.9	1240.5	70234	

Design forces and moments
(C/E = characteristic plastic/elastic, D=plast.Design, F=elast. Design)

	N[kN]	Vy[kN]	Vz[kN]	Mt[kNm]	My[kNm]	Mz[kNm]	y[mm]	z[mm]	BUCK
C	62289.5	14118.33	30403.08	5645.63	47099.45	7650.93	4.8	1160.	c c
C	-3590.6				47284.47	0.00	0.0	1262.	COMB
C	-7360.6				0.00	7597.81	0.0	0.0	COMB
C	-77010.7	14118.33	30403.08	5645.63	-49771.0	-7580.11	-4.8	1547.	
C	-11130.6				-58664.2	0.00	0.0	1262.	COMB
C	-7360.6				0.00	-7597.81	0.0	0.0	COMB
E	70627.7	9399.84	18523.78	3207.07	40807.76	3296.90	0.0	1262.	
E	-70627.7	9399.84	18523.78	3207.07	-40807.8	-3296.90	0.0	1262.	
D	54164.8	12276.81	24794.66	3944.92	40956.04	6195.67	3.7	1160.	

SOFiSTiK AG - www.sofistik.de

Composite bridge 38+50+38, b=14.25m, 2x2HL1100R HISTAR460 , slab 0.30m C30/37

Design forces and moments
(C/E = characteristic plastic/elastic, D=plast.Design, F=elast. Design)

	N[kN]	Vy[kN]	Vz[kN]	Mt[kNm]	My[kNm]	Mz[kNm]	y[mm]	z[mm]	BUCK
D	-3122.3				41116.93	0.00	0.0	1262.	COMB
D	-4907.1				0.00	6168.47	0.0	0.0	COMB
D	-63978.9	12276.81	24794.66	3944.92	-42475.2	-6159.40	-3.7	1476.	
D	-6691.9				-48703.4	0.00	0.0	1262.	COMB
D	-4907.1				0.00	-6168.47	0.0	0.0	COMB
F	61415.4	8173.78	16107.64	2138.04	35485.01	2866.87	0.0	1262.	
F	-61415.4	8173.78	16107.64	2138.04	-35485.0	-2866.87	0.0	1262.	

Additional Design Data

M	periphery-O/-I [m2/m]	[m2/m]	deff [mm]	t-min [mm]	t-max [mm]	SMP [o/o]	thet-p [tm2/m]	thet-y [tm2/m]	thet-z [tm2/m]	thet-yz [tm2/m]
	8.424		50.1	32.0	418.0	0.0	1.585	1.554	0.031	
1	7.584		49.0	45.0	52.0	0.0	1.055	1.023	0.031	
25	0.836		1174.0			0.0	0.018	0.018		
**	0.004		32.0			0.0	0.000		0.000	

Cross section No. 277.5 = CS 30 - in-situ conc:C3

Cross section No. 278 - VFT (253)

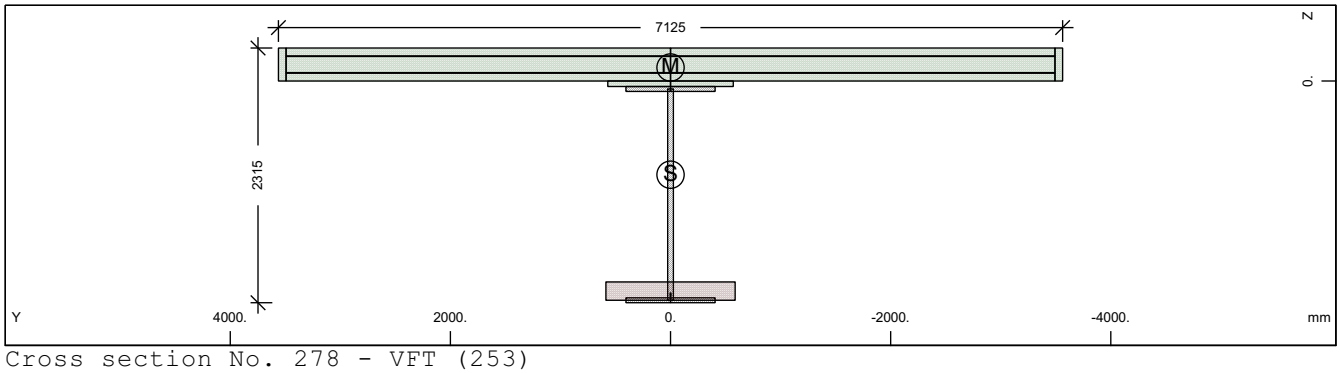

Cross section No. 278 - VFT (253)

Static properties of cross section

Mat NoR	A[cm2] It[cm4]	Ay/Az/Ayz [cm2]	Iy/Iz/Iyz [cm4]	ys/zs [mm]	y/z-sc [mm]	modules [N/mm2]	gam [kN/m]
1	2245.22	364.61	15691331.	0.0	0.0	210000	73.31
	6270.0	615.63	17393552.	851.6	-122.9	80769	

Additional static properties of cross section

Alfa-T [1/°K]	ymin ymax [mm]	zmin zmax [mm]	hymin hzmin [mm]	AK AB [cm2]	MB	Tau-T Tau-B [1/m3]	Tau-Vy Tau-Vz [1/m2]
1.2E-05	-3562.5	-1151.6		1.339E+03		1.273E+01	3.341E+01
	3562.5	1163.8		2.390E+04		1.255E+02	2.282E+01

Section values for warping

Wmin[cm2]	Wmax[cm2]	CM[cm6]	CMS[cm4]	ASwyy[cm6]	ASwzz[cm6]	ry[mm]	rz[mm]
-8568.74	8568.74	1.008E+10	1731554.8	-94.25	-85.02	0.0	1018.1

Partial cross sections

Mat NoR	A[cm2] It[cm4]	Ay/Az/Ayz [cm2]	Iy/Iz/Iyz [cm4]	ys/zs [mm]	modules [N/mm2]	gam [kN/m]
1	1727.58	0.11	9789557.1	0.0	210000	13.56
	13921.3	348.97	398580.9	1032.7	80769	
25	1952.83		45027.3	0.0	10667	4.88
	8971797.0	2.54	0.0	1909.7	4444	
210	0.64	0.00	0.0	0.0	200000	0.00
	2.2	0.00	0.0	1942.8	76923	
31	21945.00	17188.38	170028.4	0.0	0	54.86
	6417251.4	11903.01	904880243.	-145.5	0	

SOFiSTiK AG - www.sofistik.de

Composite bridge 38+50+38, b=14.25m, 2x2HL1100R HISTAR460 , slab 0.30m C30/37

300	438.74	382.72	24678.9	0.0	200000	0.00
	14.4	279.33	17844716.	-150.0	76923	

Design values of cross section

Mat	A[cm2]	Ay/Az/Ayz	Iy/Iz/Iyz	ys/zs	modules	gam
NoR	It[cm4]	[cm2]	[cm4]	[mm]	[N/mm2]	[kN/m]
1	2222.08	364.61	15428974.	0.0	182609	73.31
	6270.0	615.11	17393550.	840.5	70234	

Design forces and moments
(C/E = characteristic plastic/elastic, D=plast.Design, F=elast. Design)

	N[kN]	Vy[kN]	Vz[kN]	Mt[kNm]	My[kNm]	Mz[kNm]	y[mm]	z[mm]	BUCK
C	79842.8	62992.79	51798.20	101305.4	71430.53	101608.7	28.8	-29.1	c c
C	-81429.9				127725.0	0.00	0.0	851.6	COMB
C	-35846.7				0.00	101909.2	0.0	0.0	COMB
C	-143211.	62992.79	51798.21	101305.4	-66924.7	-101440.	-28.8	572.3	
C	9736.4				-68285.2	0.00	0.0	851.6	COMB
C	-35846.7				0.00	-101909.	0.0	0.0	COMB
E	75215.0	8641.51	12647.50	1296.54	45168.45	26141.70	0.0	851.6	
E	-75215.0	8641.51	12647.50	1296.54	-45168.5	-26141.7	0.0	851.6	
D	69428.5	47429.54	39080.79	67722.30	60838.99	76643.33	20.1	-73.6	
D	-57450.8				97747.25	0.00	0.0	851.6	COMB
D	-23897.8				0.00	76805.02	0.0	0.0	COMB
D	-111674.	47429.54	39080.80	67722.30	-56582.2	-76564.8	-20.1	533.0	
D	9655.1				-58120.7	0.00	0.0	851.6	COMB
D	-23897.8				0.00	-76805.0	0.0	0.0	COMB
F	65404.4	7514.35	10997.83	864.36	39276.91	22731.92	0.0	851.6	
F	-65404.4	7514.35	10997.83	864.36	-39276.9	-22731.9	0.0	851.6	

Additional Design Data

M	periphery-O/-I		deff	t-min	t-max	SMP	thet-p	thet-y	thet-z	thet-yz
	[m2/m]	[m2/m]	[mm]	[mm]	[mm]	[o/o]	[tm2/m]	[tm2/m]	[tm2/m]	[tm2/m]
	51.892		8.7	3.1	300.0	0.0	26.449	3.795	22.653	
1	7.081		48.8	45.0	52.0	0.0	0.800	0.768	0.031	
25	0.333		1174.0			0.0	0.001	0.001		
**	0.004		32.0			0.0	0.000	0.000	0.000	
31	16.530		265.5	50.0	300.0	0.0	22.626	0.004	22.622	
**	27.945		3.1	3.1	3.1	0.0	0.000	0.000	0.000	

Cross section No. 278.1 = CS 1 - steel alone

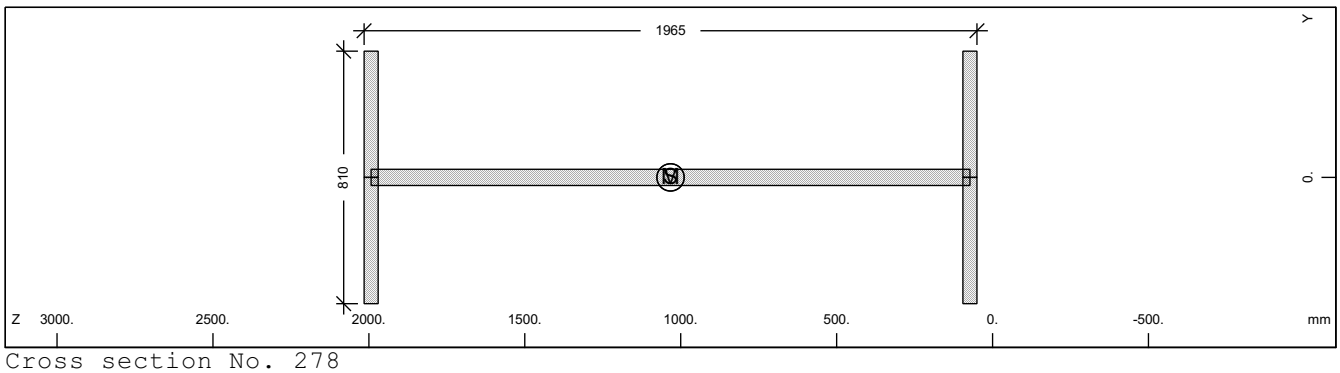

Cross section No. 278

Static properties of cross section

Mat	A[cm2]	Ay/Az/Ayz	Iy/Iz/Iyz	ys/zs	modules	gam
NoR	It[cm4]	[cm2]	[cm4]	[mm]	[N/mm2]	[kN/m]
1	1727.58	607.50	9789557.1	0.0	210000	13.56
	6270.0	943.89	398580.9	1032.7	80769	

SOFiSTiK AG - www.sofistik.de

Composite bridge 38+50+38, b=14.25m, 2x2HL1100R HISTAR460 , slab 0.30m C30/37

Additional static properties of cross section

Alfa-T	ymin ymax	zmin zmax	hymin hzmin	AK AB	MB	Tau-T Tau-B	Tau-Vy Tau-Vz
[1/°K]	[mm]	[mm]	[mm]	[cm2]		[1/m3]	[1/m2]
1.2E-05	-405.0	-982.7		1.030E+03		3.735E+02	2.058E+01
	405.0	982.7				1.255E+02	1.158E+01

Section values for warping

Wmin[cm2]	Wmax[cm2]	CM[cm6]	CMS[cm4]	ASwyy[cm6]	ASwzz[cm6]	ry[mm]	rz[mm]
-3888.69	3888.693674621476.	5600702.4		-0.10	-2.58	0.0	0.0

Design values of cross section

Mat NoR	A[cm2] It[cm4]	Ay/Az/Ayz [cm2]	Iy/Iz/Iyz [cm4]	ys/zs [mm]	modules [N/mm2]	gam [kN/m]
1	1727.58	607.50	9789557.1	0.0	182609	13.56
	6270.0	943.89	398580.9	1032.7	70234	

Design forces and moments
(C/E = characteristic plastic/elastic, D=plast.Design, F=elast. Design)

	N[kN]	Vy[kN]	Vz[kN]	Mt[kNm]	My[kNm]	Mz[kNm]	y[mm]	z[mm]	BUCK
C	57873.8	14099.76	19313.71	819.40	39508.75	5380.24	0.0	1033.	c c
C	0.0				0.00	0.00	0.0	0.0	COMB
E	57873.8	9399.84	16696.76	517.80	33373.38	3296.90	0.0	1033.	
D	50325.1	12260.66	16794.53	712.52	34355.43	4678.47	0.0	1033.	
D	0.0				0.00	0.00	0.0	0.0	COMB
F	50325.1	8173.78	14518.92	450.26	29020.33	2866.87	0.0	1033.	

Additional Design Data

M	periphery-O/-I [m2/m]	[m2/m]	deff [mm]	t-min [mm]	t-max [mm]	SMP [o/o]	thet-p [tm2/m]	thet-y [tm2/m]	thet-z [tm2/m]	thet-yz [tm2/m]
	7.081		48.8	45.0	52.0	0.0	0.800	0.768	0.031	

Cross section No. 278.2 = CS 10 - prefab. slab C1

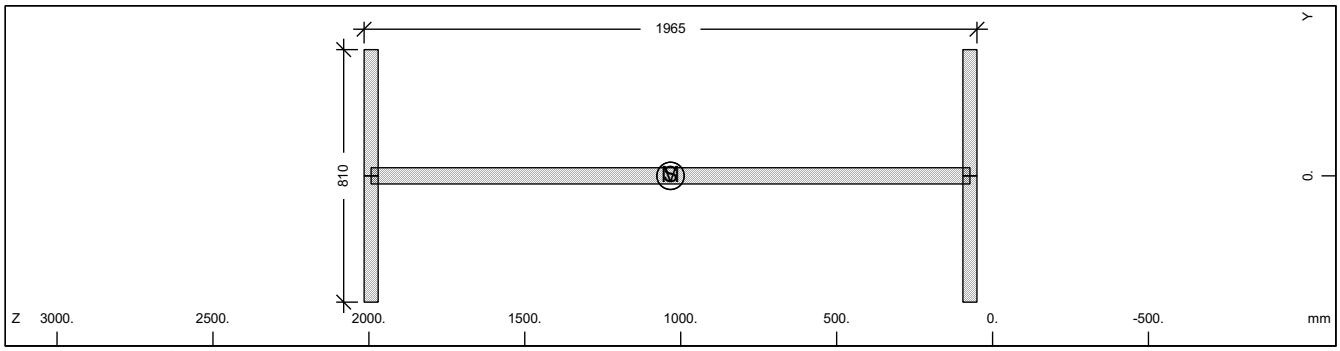

Cross section No. 278

Static properties of cross section

Mat NoR	A[cm2] It[cm4]	Ay/Az/Ayz [cm2]	Iy/Iz/Iyz [cm4]	ys/zs [mm]	modules [N/mm2]	gam [kN/m]
1	1727.58	607.50	9789557.1	0.0	210000	13.56
	6270.0	943.89	398580.9	1032.7	80769	

Additional static properties of cross section

Alfa-T	ymin ymax	zmin zmax	hymin hzmin	AK AB	MB	Tau-T Tau-B	Tau-Vy Tau-Vz
[1/°K]	[mm]	[mm]	[mm]	[cm2]		[1/m3]	[1/m2]
1.2E-05	-405.0	-982.7		1.030E+03		3.735E+02	2.058E+01
	405.0	982.7				1.255E+02	1.158E+01

Section values for warping

Wmin[cm2]	Wmax[cm2]	CM[cm6]	CMS[cm4]	ASwyy[cm6]	ASwzz[cm6]	ry[mm]	rz[mm]
-3888.69	3888.693674621476.	5600702.4		-0.10	-2.58	0.0	0.0

SOFiSTiK AG - www.sofistik.de

Composite bridge 38+50+38, b=14.25m, 2x2HL1100R HISTAR460 , slab 0.30m C30/37

Design values of cross section

Mat NoR	A[cm2] It[cm4]	Ay/Az/Ayz [cm2]	Iy/Iz/Iyz [cm4]	ys/zs [mm]	modules [N/mm2]	gam [kN/m]
1	1727.58	607.50	9789557.1	0.0	182609	13.56
	6270.0	943.89	398580.9	1032.7	70234	

Design forces and moments
(C/E = characteristic plastic/elastic, D=plast.Design, F=elast. Design)

	N[kN]	Vy[kN]	Vz[kN]	Mt[kNm]	My[kNm]	Mz[kNm]	y[mm]	z[mm]	BUCK
C	57873.8	14099.76	19313.71	819.40	39508.75	5380.24	0.0	1033.	c c
C	0.0				0.00	0.00	0.0	0.0	COMB
E	57873.8	9399.84	16696.76	517.80	33373.38	3296.90	0.0	1033.	
D	50325.1	12260.66	16794.53	712.52	34355.43	4678.47	0.0	1033.	
D	0.0				0.00	0.00	0.0	0.0	COMB
F	50325.1	8173.78	14518.92	450.26	29020.33	2866.87	0.0	1033.	

Additional Design Data

M	periphery-O/-I [m2/m] [m2/m]	deff [mm]	t-min [mm]	t-max [mm]	SMP [o/o]	thet-p [tm2/m]	thet-y [tm2/m]	thet-z [tm2/m]	thet-yz [tm2/m]
	7.081	48.8	45.0	52.0	0.0	0.800	0.768	0.031	

Cross section No. 278.3 = CS 20 - in-situ conc:C2

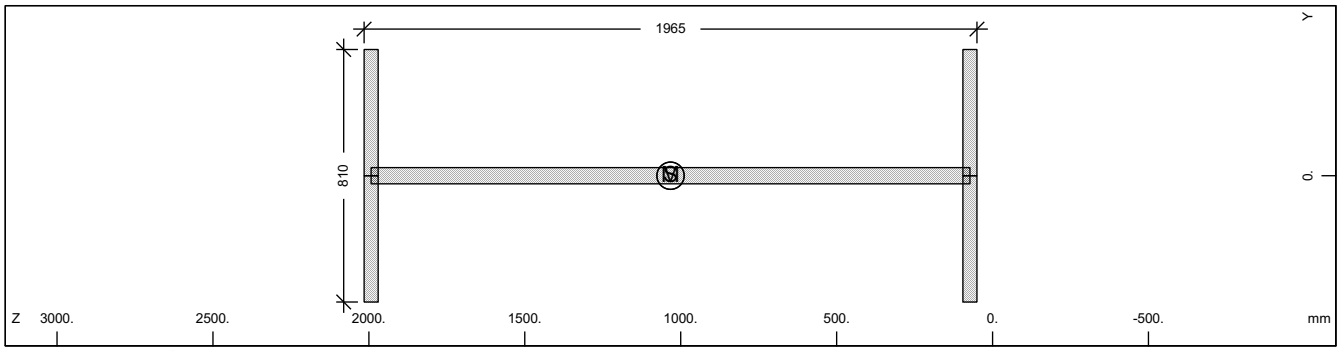

Cross section No. 278

Static properties of cross section

Mat NoR	A[cm2] It[cm4]	Ay/Az/Ayz [cm2]	Iy/Iz/Iyz [cm4]	ys/zs [mm]	modules [N/mm2]	gam [kN/m]
1	1727.58	607.50	9789557.1	0.0	210000	13.56
	6270.0	943.89	398580.9	1032.7	80769	

Additional static properties of cross section

Alfa-T [1/°K]	ymin ymax [mm]	zmin zmax [mm]	hymin hzmin [mm]	AK AB [cm2]	MB	Tau-T Tau-B [1/m3]	Tau-Vy Tau-Vz [1/m2]
1.2E-05	-405.0	-982.7		1.030E+03		3.735E+02	2.058E+01
	405.0	982.7				1.255E+02	1.158E+01

Section values for warping

Wmin[cm2]	Wmax[cm2]	CM[cm6]	CMS[cm4]	ASwyy[cm6]	ASwzz[cm6]	ry[mm]	rz[mm]
-3888.69	3888.693674621476.	5600702.4		-0.10	-2.58	0.0	0.0

Design values of cross section

Mat NoR	A[cm2] It[cm4]	Ay/Az/Ayz [cm2]	Iy/Iz/Iyz [cm4]	ys/zs [mm]	modules [N/mm2]	gam [kN/m]
1	1727.58	607.50	9789557.1	0.0	182609	13.56
	6270.0	943.89	398580.9	1032.7	70234	

Design forces and moments
(C/E = characteristic plastic/elastic, D=plast.Design, F=elast. Design)

	N[kN]	Vy[kN]	Vz[kN]	Mt[kNm]	My[kNm]	Mz[kNm]	y[mm]	z[mm]	BUCK
C	57873.8	14099.76	19313.71	819.40	39508.75	5380.24	0.0	1033.	c c
C	0.0				0.00	0.00	0.0	0.0	COMB
E	57873.8	9399.84	16696.76	517.80	33373.38	3296.90	0.0	1033.	

SOFiSTiK AG - www.sofistik.de

Composite bridge 38+50+38, b=14.25m, 2x2HL1100R HISTAR460 , slab 0.30m C30/37

Design forces and moments
(C/E = characteristic plastic/elastic, D=plast.Design, F=elast. Design)

	N[kN]	Vy[kN]	Vz[kN]	Mt[kNm]	My[kNm]	Mz[kNm]	y[mm]	z[mm]	BUCK
D	50325.1	12260.66	16794.53	712.52	34355.43	4678.47	0.0	1033.	
D	0.0				0.00	0.00	0.0	0.0	COMB
F	50325.1	8173.78	14518.92	450.26	29020.33	2866.87	0.0	1033.	

Additional Design Data

M	periphery-O/-I [m2/m]	[m2/m]	deff [mm]	t-min [mm]	t-max [mm]	SMP [o/o]	thet-p [tm2/m]	thet-y [tm2/m]	thet-z [tm2/m]	thet-yz [tm2/m]
	7.081		48.8	45.0	52.0	0.0	0.800	0.768	0.031	

Cross section No. 278.4 = CS 21 - reinf active:C2

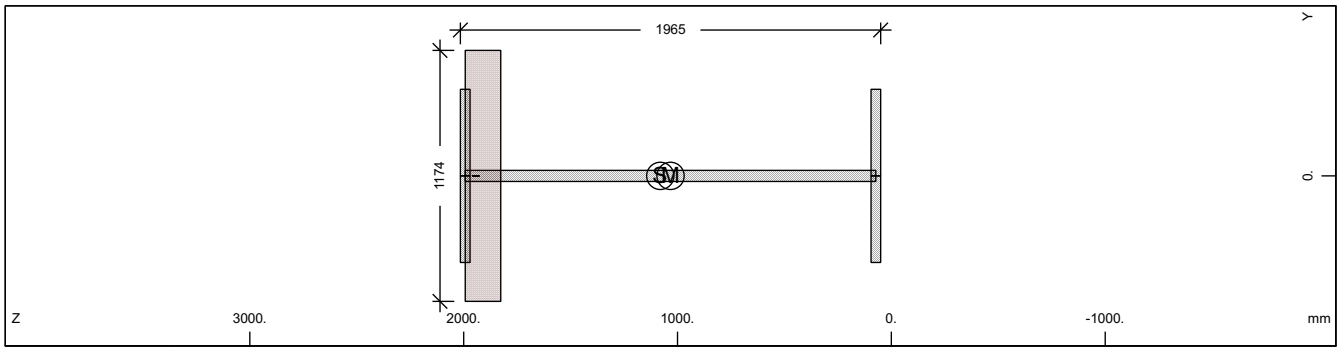

Cross section No. 278

Static properties of cross section

Mat NoR	A[cm2] It[cm4]	Ay/Az/Ayz [cm2]	Iy/Iz/Iyz [cm4]	ys/zs [mm]	modules [N/mm2]	gam [kN/m]
1	1827.38	607.50	10517883.	0.0	210000	18.44
	6270.0	938.45	398580.9	1080.6	80769	

Additional static properties of cross section

Alfa-T [1/°K]	ymin ymax [mm]	zmin zmax [mm]	hymin hzmin [mm]	AK AB [cm2]	MB	Tau-T Tau-B [1/m3]	Tau-Vy Tau-Vz [1/m2]
1.2E-05	-587.0	-1030.6		1.339E+03		1.273E+01	2.058E+01
	587.0	934.8		1.953E+03		1.255E+02	1.155E+01

Section values for warping

Wmin[cm2]	Wmax[cm2]	CM[cm6]	CMS[cm4]	ASwyy[cm6]	ASwzz[cm6]	ry[mm]	rz[mm]
-3888.69	3888.693674621708.		5600702.8	-0.58	-15.23	0.0	14.7

Partial cross sections

Mat NoR	A[cm2] It[cm4]	Ay/Az/Ayz [cm2]	Iy/Iz/Iyz [cm4]	ys/zs [mm]	modules [N/mm2]	gam [kN/m]
1	1727.58	607.50	9789557.1	0.0	210000	13.56
	13921.3	938.01	398580.9	1032.7	80769	
25	1952.83		45027.3	0.0	10667	4.88
	8971797.0	7.99	0.0	1909.7	4444	
210	0.64	0.00	0.0	0.0	200000	0.00
	2.2	0.00	0.0	1942.8	76923	

Design values of cross section

Mat NoR	A[cm2] It[cm4]	Ay/Az/Ayz [cm2]	Iy/Iz/Iyz [cm4]	ys/zs [mm]	modules [N/mm2]	gam [kN/m]
1	1804.24	607.50	10356215.	0.0	182609	18.44
	6270.0	938.35	398580.9	1069.9	70234	

Design forces and moments
(C/E = characteristic plastic/elastic, D=plast.Design, F=elast. Design)

	N[kN]	Vy[kN]	Vz[kN]	Mt[kNm]	My[kNm]	Mz[kNm]	y[mm]	z[mm]	BUCK
C	57906.0	14118.33	22997.76	2718.50	39538.00	6248.67	2.0	1034.	c c
C	-1637.0				39576.46	0.00	0.0	1081.	COMB

SOFiSTiK AG - www.sofistik.de

Composite bridge 38+50+38, b=14.25m, 2x2HL1100R HISTAR460 , slab 0.30m C30/37

Design forces and moments
(C/E = characteristic plastic/elastic, D=plast.Design, F=elast. Design)

	N[kN]	Vy[kN]	Vz[kN]	Mt[kNm]	My[kNm]	Mz[kNm]	y[mm]	z[mm]	BUCK
C	-2929.2				0.00	6240.23	0.0	0.0	COMB
C	-63764.5	14118.33	22997.76	2718.50	-44177.9	-6237.08	-2.0	1202.	
C	-4221.5				-44433.7	0.00	0.0	1081.	COMB
C	-2929.2				0.00	-6240.23	0.0	0.0	COMB
E	61217.2	9399.84	16746.75	1296.50	34189.43	3296.90	0.0	1081.	
E	-61217.2	9399.84	16746.75	1296.50	-34189.4	-3296.90	0.0	1081.	
D	50353.0	12276.81	19344.28	1980.15	34380.87	5256.71	1.7	1034.	
D	-1423.5				34414.31	0.00	0.0	1081.	COMB
D	-1952.8				0.00	5251.84	0.0	0.0	COMB
D	-54258.7	12276.81	19344.28	1980.15	-37550.8	-5250.22	-1.7	1162.	
D	-2482.2				-37652.5	0.00	0.0	1081.	COMB
D	-1952.8				0.00	-5251.84	0.0	0.0	COMB
F	53232.4	8173.78	14562.39	864.34	29729.94	2866.87	0.0	1081.	
F	-53232.4	8173.78	14562.39	864.34	-29729.9	-2866.87	0.0	1081.	

Additional Design Data

M	periphery-O/-I [m2/m]	[m2/m]	deff [mm]	t-min [mm]	t-max [mm]	SMP [o/o]	thet-p [tm2/m]	thet-y [tm2/m]	thet-z [tm2/m]	thet-yz [tm2/m]
	7.417		49.3	32.0	166.3	0.0	1.077	1.046	0.031	
1	7.081		48.8	45.0	52.0	0.0	0.800	0.768	0.031	
25	0.333		1174.0			0.0	0.001	0.001		
**	0.004		32.0			0.0	0.000	0.000	0.000	

Cross section No. 278.5 = CS 30 - in-situ conc:C3

Cross section No. 279 - VFT (253)

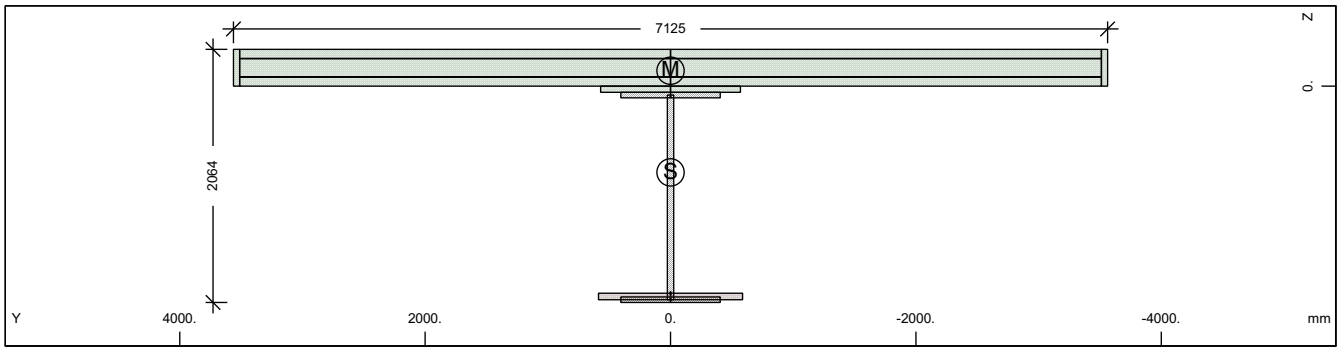

Cross section No. 279 - VFT (253)

Static properties of cross section

Mat NoR	A[cm2] It[cm4]	Ay/Az/Ayz [cm2]	Iy/Iz/Iyz [cm4]	ys/zs [mm]	y/z-sc [mm]	modules [N/mm2]	gam [kN/m]
1	2049.01	366.34	11161376.	0.0	0.0	210000	68.95
	6270.0	486.58	17674132.	702.8	-126.2	80769	

Additional static properties of cross section

Alfa-T [1/°K]	ymin ymax [mm]	zmin zmax [mm]	hymin hzmin [mm]	AK AB [cm2]	MB	Tau-T Tau-B [1/m3]	Tau-Vy Tau-Vz [1/m2]
1.2E-05	-3562.5	-1002.8		4.476E+02		3.806E+01	3.324E+01
	3562.5	1060.9		2.257E+04		1.255E+02	2.781E+01

Section values for warping

Wmin[cm2]	Wmax[cm2]	CM[cm6]	CMS[cm4]	ASwyy[cm6]	ASwzz[cm6]	ry[mm]	rz[mm]
-7562.84	7562.848097922462.		1142391.1	105.88	66.86	0.0	537.1

SOFiSTiK AG - www.sofistik.de

Composite bridge 38+50+38, b=14.25m, 2x2HL1100R HISTAR460 , slab 0.30m C30/37

Partial cross sections

Mat NoR	A[cm2] It[cm4]	Ay/Az/Ayz [cm2]	Iy/Iz/Iyz [cm4]	ys/zs [mm]	modules [N/mm2]	gam [kN/m]
1	1596.73	0.11	7088401.2	0.0	210000	12.53
	12741.8	243.55	398580.9	906.9	80769	
25	620.94		1447.5	0.0	10667	1.55
	2852745.4	0.09	0.0	1714.8	4444	
210	0.64	0.00	0.0	0.0	200000	0.00
	2.2	0.00	0.0	1691.2	76923	
31	21945.00	16804.94	170028.4	0.0	0	54.86
	6417251.4	10655.03	904880243.	-145.5	0	
300	441.14	384.54	24814.0	0.0	200000	0.00
	14.5	254.71	18139325.	-150.0	76923	

Design values of cross section

Mat NoR	A[cm2] It[cm4]	Ay/Az/Ayz [cm2]	Iy/Iz/Iyz [cm4]	ys/zs [mm]	modules [N/mm2]	gam [kN/m]
1	2041.65	366.34	11085727.	0.0	182609	68.95
	6270.0	486.13	17674132.	699.2	70234	

Design forces and moments
(C/E = characteristic plastic/elastic, D=plast.Design, F=elast. Design)

	N[kN]	Vy[kN]	Vz[kN]	Mt[kNm]	My[kNm]	Mz[kNm]	y[mm]	z[mm]	BUCK
C	75579.3	63062.11	47069.75	99949.73	59647.57	101277.4	60.4	-75.8	c c
C	-80751.4				107916.8	0.00	0.0	702.8	COMB
C	-33848.9				0.00	101686.4	0.0	0.0	COMB
C	-137246.	63062.11	47069.75	99949.73	-51510.1	-101165.	-60.4	328.3	
C	13053.6				-53955.5	0.00	0.0	702.8	COMB
C	-33848.9				0.00	-101686.	0.0	0.0	COMB
E	68641.8	8685.57	10381.66	433.52	35244.95	26418.80	0.0	702.8	
E	-68641.8	8685.57	10381.66	433.52	-35245.0	-26418.8	0.0	702.8	
D	65721.1	47489.82	35414.98	66805.17	50769.64	76512.34	21.7	-74.2	
D	-56860.8				82509.54	0.00	0.0	702.8	COMB
D	-22565.9				0.00	76730.24	0.0	0.0	COMB
D	-106832.	47489.82	35414.98	66805.17	-44264.9	-76485.4	-21.7	315.8	
D	11728.9				-46535.3	0.00	0.0	702.8	COMB
D	-22565.9				0.00	-76730.2	0.0	0.0	COMB
F	59688.5	7552.67	9027.53	289.02	30647.79	22972.88	0.0	702.8	
F	-59688.5	7552.67	9027.53	289.02	-30647.8	-22972.9	0.0	702.8	

Additional Design Data

M	periphery-O/-I [m2/m]	[m2/m]	deff [mm]	t-min [mm]	t-max [mm]	SMP [o/o]	thet-p [tm2/m]	thet-y [tm2/m]	thet-z [tm2/m]	thet-yz [tm2/m]
	51.315		8.0	3.1	300.0	0.0	24.764	2.111	22.653	
1	6.577		48.6	45.0	52.0	0.0	0.588	0.556	0.031	
25	0.106		1174.0			0.0	0.000	0.000		
**	0.004		32.0			0.0	0.000		0.000	
31	16.530		265.5	50.0	300.0	0.0	22.626	0.004	22.622	
**	28.098		3.1	3.1	3.1	0.0	0.000	0.000	0.000	

SOFiSTiK AG - www.sofistik.de

Composite bridge 38+50+38, b=14.25m, 2x2HL1100R HISTAR460 , slab 0.30m C30/37

Cross section No. 279.1 = CS 1 - steel alone

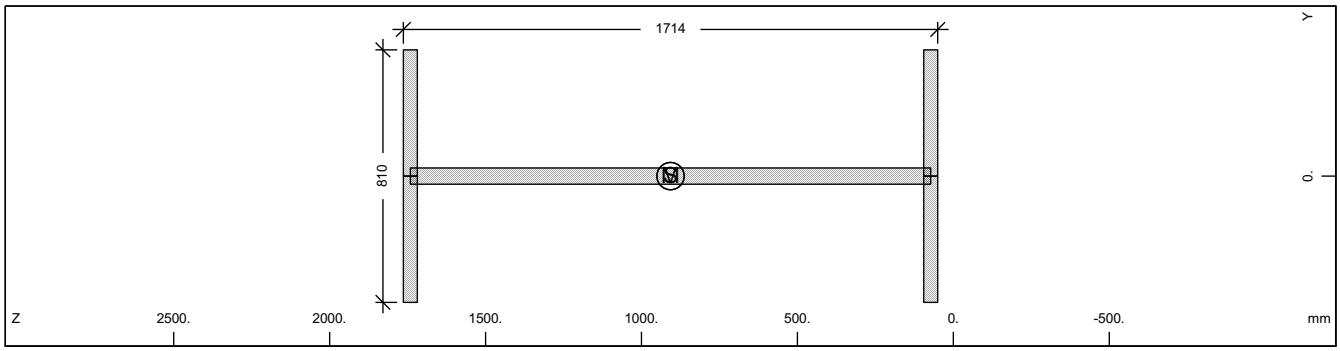

Cross section No. 279

Static properties of cross section

Mat NoR	A[cm2] It[cm4]	Ay/Az/Ayz [cm2]	Iy/Iz/Iyz [cm4]	ys/zs [mm]	modules [N/mm2]	gam [kN/m]
1	1596.73	607.50	7088401.2	0.0	210000	12.53
	6270.0	815.49	398580.9	906.9	80769	

Additional static properties of cross section

Alfa-T [1/°K]	ymin ymax [mm]	zmin zmax [mm]	hymin hzmin [mm]	AK AB [cm2]	MB	Tau-T Tau-B [1/m3]	Tau-Vy Tau-Vz [1/m2]
1.2E-05	-405.0	-856.9		9.424E+02		4.081E+02	2.058E+01
	405.0	856.9				1.255E+02	1.316E+01

Section values for warping

Wmin[cm2]	Wmax[cm2]	CM[cm6]	CMS[cm4]	ASwyy[cm6]	ASwzz[cm6]	ry[mm]	rz[mm]
-3379.12	3379.122774685865.		4229058.7	-1.20	-21.27	0.0	0.0

Design values of cross section

Mat NoR	A[cm2] It[cm4]	Ay/Az/Ayz [cm2]	Iy/Iz/Iyz [cm4]	ys/zs [mm]	modules [N/mm2]	gam [kN/m]
1	1596.73	607.50	7088401.2	0.0	182609	12.53
	6270.0	815.49	398580.9	906.9	70234	

Design forces and moments
(C/E = characteristic plastic/elastic, D=plast.Design, F=elast. Design)

	N[kN]	Vy[kN]	Vz[kN]	Mt[kNm]	My[kNm]	Mz[kNm]	y[mm]	z[mm]	BUCK
C	53490.3	14099.76	16782.87	753.60	32502.88	5323.25	0.0	906.9	c c
C	0.0				0.00	0.00	0.0	0.0	COMB
E	53490.3	9399.84	14695.65	473.93	27713.28	3296.90	0.0	906.9	
D	46513.3	12260.66	14593.80	655.30	28263.38	4628.91	0.0	906.9	
D	0.0				0.00	0.00	0.0	0.0	COMB
F	46513.3	8173.78	12778.83	412.11	24098.51	2866.87	0.0	906.9	

Additional Design Data

M	periphery-O/-I [m2/m] [m2/m]	deff [mm]	t-min [mm]	t-max [mm]	SMP [o/o]	thet-p [tm2/m]	thet-y [tm2/m]	thet-z [tm2/m]	thet-yz [tm2/m]
	6.577	48.6	45.0	52.0	0.0	0.588	0.556	0.031	

SOFiSTiK AG - www.sofistik.de

Composite bridge 38+50+38, b=14.25m, 2x2HL1100R HISTAR460 , slab 0.30m C30/37

Cross section No. 279.2 = CS 10 - prefab. slab C1

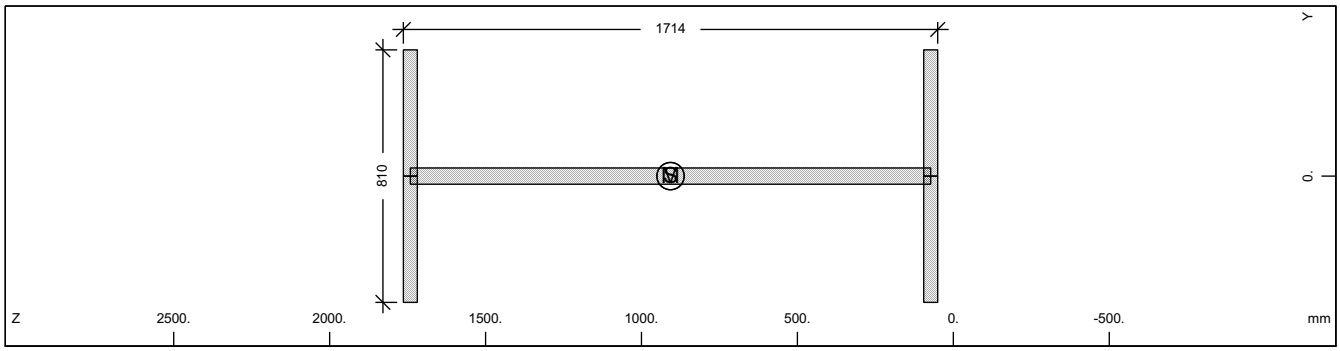

Cross section No. 279

Static properties of cross section

Mat NoR	A[cm2] It[cm4]	Ay/Az/Ayz [cm2]	Iy/Iz/Iyz [cm4]	ys/zs [mm]	modules [N/mm2]	gam [kN/m]
1	1596.73	607.50	7088401.2	0.0	210000	12.53
	6270.0	815.49	398580.9	906.9	80769	

Additional static properties of cross section

Alfa-T [1/°K]	ymin ymax [mm]	zmin zmax [mm]	hymin hzmin [mm]	AK AB [cm2]	MB	Tau-T Tau-B [1/m3]	Tau-Vy Tau-Vz [1/m2]
1.2E-05	-405.0	-856.9		9.424E+02		4.081E+02	2.058E+01
	405.0	856.9				1.255E+02	1.316E+01

Section values for warping

Wmin[cm2]	Wmax[cm2]	CM[cm6]	CMS[cm4]	ASwyy[cm6]	ASwzz[cm6]	ry[mm]	rz[mm]
-3379.12	3379.122774685865.		4229058.7	-1.20	-21.27	0.0	0.0

Design values of cross section

Mat NoR	A[cm2] It[cm4]	Ay/Az/Ayz [cm2]	Iy/Iz/Iyz [cm4]	ys/zs [mm]	modules [N/mm2]	gam [kN/m]
1	1596.73	607.50	7088401.2	0.0	182609	12.53
	6270.0	815.49	398580.9	906.9	70234	

Design forces and moments
(C/E = characteristic plastic/elastic, D=plast.Design, F=elast. Design)

	N[kN]	Vy[kN]	Vz[kN]	Mt[kNm]	My[kNm]	Mz[kNm]	y[mm]	z[mm]	BUCK
C	53490.3	14099.76	16782.87	753.60	32502.88	5323.25	0.0	906.9	c c
C	0.0				0.00	0.00	0.0	0.0	COMB
E	53490.3	9399.84	14695.65	473.93	27713.28	3296.90	0.0	906.9	
D	46513.3	12260.66	14593.80	655.30	28263.38	4628.91	0.0	906.9	
D	0.0				0.00	0.00	0.0	0.0	COMB
F	46513.3	8173.78	12778.83	412.11	24098.51	2866.87	0.0	906.9	

Additional Design Data

M	periphery-O/-I [m2/m] [m2/m]	deff [mm]	t-min [mm]	t-max [mm]	SMP [o/o]	thet-p [tm2/m]	thet-y [tm2/m]	thet-z [tm2/m]	thet-yz [tm2/m]
	6.577	48.6	45.0	52.0	0.0	0.588	0.556	0.031	

SOFiSTiK AG - www.sofistik.de

Composite bridge 38+50+38, b=14.25m, 2x2HL1100R HISTAR460 , slab 0.30m C30/37

Cross section No. 279.3 = CS 20 - in-situ conc:C2

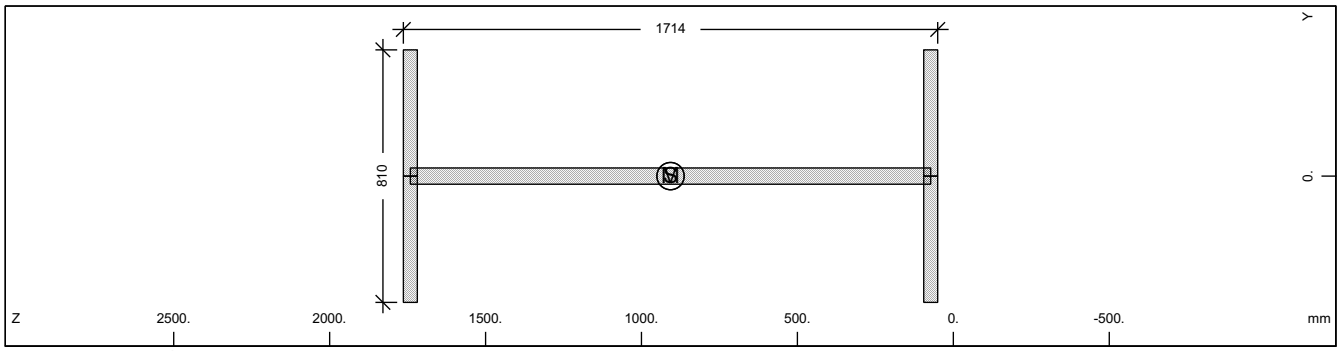

Cross section No. 279

Static properties of cross section

Mat NoR	A[cm2] It[cm4]	Ay/Az/Ayz [cm2]	Iy/Iz/Iyz [cm4]	ys/zs [mm]	modules [N/mm2]	gam [kN/m]
1	1596.73	607.50	7088401.2	0.0	210000	12.53
	6270.0	815.49	398580.9	906.9	80769	

Additional static properties of cross section

Alfa-T [1/°K]	ymin ymax [mm]	zmin zmax [mm]	hymin hzmin [mm]	AK AB [cm2]	MB	Tau-T Tau-B [1/m3]	Tau-Vy Tau-Vz [1/m2]
1.2E-05	-405.0	-856.9		9.424E+02		4.081E+02	2.058E+01
	405.0	856.9				1.255E+02	1.316E+01

Section values for warping

Wmin[cm2]	Wmax[cm2]	CM[cm6]	CMS[cm4]	ASwyy[cm6]	ASwzz[cm6]	ry[mm]	rz[mm]
-3379.12	3379.122774685865.		4229058.7	-1.20	-21.27	0.0	0.0

Design values of cross section

Mat NoR	A[cm2] It[cm4]	Ay/Az/Ayz [cm2]	Iy/Iz/Iyz [cm4]	ys/zs [mm]	modules [N/mm2]	gam [kN/m]
1	1596.73	607.50	7088401.2	0.0	182609	12.53
	6270.0	815.49	398580.9	906.9	70234	

Design forces and moments
(C/E = characteristic plastic/elastic, D=plast.Design, F=elast. Design)

	N[kN]	Vy[kN]	Vz[kN]	Mt[kNm]	My[kNm]	Mz[kNm]	y[mm]	z[mm]	BUCK
C	53490.3	14099.76	16782.87	753.60	32502.88	5323.25	0.0	906.9	c c
C	0.0				0.00	0.00	0.0	0.0	COMB
E	53490.3	9399.84	14695.65	473.93	27713.28	3296.90	0.0	906.9	
D	46513.3	12260.66	14593.80	655.30	28263.38	4628.91	0.0	906.9	
D	0.0				0.00	0.00	0.0	0.0	COMB
F	46513.3	8173.78	12778.83	412.11	24098.51	2866.87	0.0	906.9	

Additional Design Data

M	periphery-O/-I [m2/m] [m2/m]	deff [mm]	t-min [mm]	t-max [mm]	SMP [o/o]	thet-p [tm2/m]	thet-y [tm2/m]	thet-z [tm2/m]	thet-yz [tm2/m]
	6.577	48.6	45.0	52.0	0.0	0.588	0.556	0.031	

SOFiSTiK AG - www.sofistik.de

Composite bridge 38+50+38, b=14.25m, 2x2HL1100R HISTAR460 , slab 0.30m C30/37

Cross section No. 279.4 = CS 21 - reinf active:C2

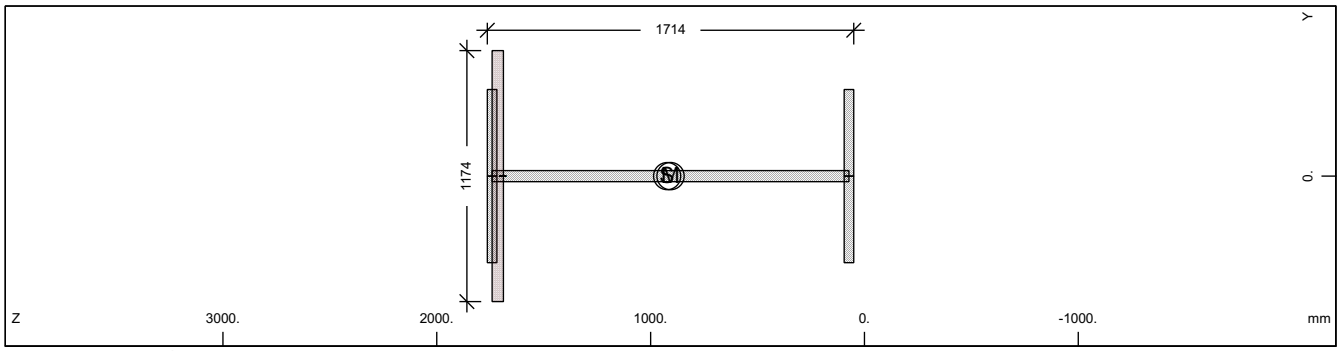

Cross section No. 279

Static properties of cross section

Mat NoR	A[cm2] It[cm4]	Ay/Az/Ayz [cm2]	Iy/Iz/Iyz [cm4]	ys/zs [mm]	modules [N/mm2]	gam [kN/m]
1	1628.88	607.50	7293967.9	0.0	210000	14.09
	6270.0	816.70	398580.9	922.8	80769	

Additional static properties of cross section

Alfa-T [1/°K]	ymin ymax [mm]	zmin zmax [mm]	hymin hzmin [mm]	AK AB [cm2]	MB	Tau-T Tau-B [1/m3]	Tau-Vy Tau-Vz [1/m2]
1.2E-05	-587.0	-872.8		4.476E+02		3.806E+01	2.058E+01
	587.0	840.9		6.209E+02		1.255E+02	1.313E+01

Section values for warping

Wmin[cm2]	Wmax[cm2]	CM[cm6]	CMS[cm4]	ASwyy[cm6]	ASwzz[cm6]	ry[mm]	rz[mm]
-3379.12	3379.122774685865.		4229058.7	-1.80	-32.93	0.0	6.4

Partial cross sections

Mat NoR	A[cm2] It[cm4]	Ay/Az/Ayz [cm2]	Iy/Iz/Iyz [cm4]	ys/zs [mm]	modules [N/mm2]	gam [kN/m]
1	1596.73	607.50	7088401.2	0.0	210000	12.53
	12741.8	816.68	398580.9	906.9	80769	
25	620.94		1447.5	0.0	10667	1.55
	2852745.4	0.38	0.0	1714.8	4444	
210	0.64	0.00	0.0	0.0	200000	0.00
	2.2	0.00	0.0	1691.2	76923	

Design values of cross section

Mat NoR	A[cm2] It[cm4]	Ay/Az/Ayz [cm2]	Iy/Iz/Iyz [cm4]	ys/zs [mm]	modules [N/mm2]	gam [kN/m]
1	1621.52	607.50	7247582.9	0.0	182609	14.09
	6270.0	816.69	398580.9	919.2	70234	

Design forces and moments
(C/E = characteristic plastic/elastic, D=plast.Design, F=elast. Design)

	N[kN]	Vy[kN]	Vz[kN]	Mt[kNm]	My[kNm]	Mz[kNm]	y[mm]	z[mm]	BUCK
C	53522.4	14118.33	18269.30	1362.70	32528.09	5597.96	0.8	907.8	c c
C	-523.1				32532.02	0.00	0.0	922.8	COMB
C	-931.4				0.00	5596.87	0.0	0.0	COMB
C	-55385.3	14118.33	18269.30	1362.70	-33981.5	-5596.39	-0.8	961.2	
C	-1339.7				-34007.3	0.00	0.0	922.8	COMB
C	-931.4				0.00	-5596.87	0.0	0.0	COMB
E	54567.4	9399.84	14733.37	433.49	27996.23	3296.90	0.0	922.8	
E	-54567.4	9399.84	14733.37	433.49	-27996.2	-3296.90	0.0	922.8	
D	46541.3	12276.81	15678.47	1062.93	28285.29	4811.86	0.6	907.8	
D	-454.9				28288.71	0.00	0.0	922.8	COMB
D	-620.9				0.00	4811.38	0.0	0.0	COMB
D	-47783.1	12276.81	15678.47	1062.93	-29262.0	-4811.09	-0.6	948.8	
D	-787.0				-29272.2	0.00	0.0	922.8	COMB
D	-620.9				0.00	-4811.38	0.0	0.0	COMB

SOFiSTiK AG - www.sofistik.de

Composite bridge 38+50+38, b=14.25m, 2x2HL1100R HISTAR460 , slab 0.30m C30/37

Design forces and moments
(C/E = characteristic plastic/elastic, D=plast.Design, F=elast. Design)

	N[kN]	Vy[kN]	Vz[kN]	Mt[kNm]	My[kNm]	Mz[kNm]	y[mm]	z[mm]	BUCK
F	47449.9	8173.78	12811.63	288.99	24344.55	2866.87	0.0	922.8	
F	-47449.9	8173.78	12811.63	288.99	-24344.5	-2866.87	0.0	922.8	

Additional Design Data

M	periphery-O/-I [m2/m]	[m2/m]	deff [mm]	t-min [mm]	t-max [mm]	SMP [o/o]	thet-p [tm2/m]	thet-y [tm2/m]	thet-z [tm2/m]	thet-yz [tm2/m]
	6.687		48.7	32.0	52.9	0.0	0.678	0.647	0.031	
1	6.577		48.6	45.0	52.0	0.0	0.588	0.556	0.031	
25	0.106		1174.0			0.0	0.000	0.000		
**	0.004		32.0			0.0	0.000		0.000	

Cross section No. 279.5 = CS 30 - in-situ conc:C3

Cross section No. 280 - VFT (253)

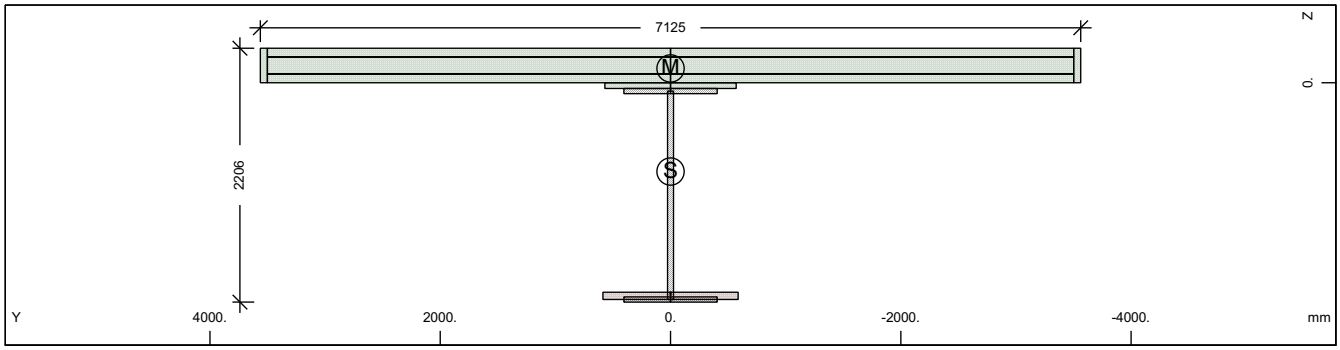

Cross section No. 280 - VFT (253)

Static properties of cross section

Mat NoR	A[cm2] It[cm4]	Ay/Az/Ayz [cm2]	Iy/Iz/Iyz [cm4]	ys/zs [mm]	y/z-sc [mm]	modules [N/mm2]	gam [kN/m]
1	2127.55	365.37	13282624.	0.0	0.0	210000	69.83
	6270.0	555.92	17515630.	771.4	-124.3	80769	

Additional static properties of cross section

Alfa-T [1/°K]	ymin ymax [mm]	zmin zmax [mm]	hymin hzmin [mm]	AK AB [cm2]	MB	Tau-T Tau-B [1/m3]	Tau-Vy Tau-Vz [1/m2]
1.2E-05	-3562.5	-1071.4		5.293E+02		3.219E+01	3.333E+01
	3562.5	1134.1		2.269E+04		1.255E+02	2.502E+01

Section values for warping

Wmin[cm2]	Wmax[cm2]	CM[cm6]	CMS[cm4]	ASwyy[cm6]	ASwzz[cm6]	ry[mm]	rz[mm]
-8129.78	8129.789183127470.		1452303.7	149.96	113.72	0.0	804.2

Partial cross sections

Mat NoR	A[cm2] It[cm4]	Ay/Az/Ayz [cm2]	Iy/Iz/Iyz [cm4]	ys/zs [mm]	modules [N/mm2]	gam [kN/m]
1	1670.47	0.11	8545859.2	0.0	210000	13.11
	13406.5	297.10	398580.9	977.8	80769	
25	740.81		2458.1	0.0	10667	1.85
	3403465.1	0.17	0.0	1851.5	4444	
210	0.64	0.00	0.0	0.0	200000	0.00
	2.2	0.00	0.0	1833.0	76923	
31	21945.00	17019.69	170028.4	0.0	0	54.86
	6417251.4	11464.44904880243.		-145.5	0	
300	439.78	383.51	24737.9	0.0	200000	0.00
	14.5	271.25	17972897.	-150.0	76923	

SOFiSTiK AG - www.sofistik.de

Composite bridge 38+50+38, b=14.25m, 2x2HL1100R HISTAR460 , slab 0.30m C30/37

Design values of cross section

Mat NoR	A[cm2] It[cm4]	Ay/Az/Ayz [cm2]	Iy/Iz/Iyz [cm4]	ys/zs [mm]	modules [N/mm2]	gam [kN/m]
1	2118.77	365.37	13179757.	0.0	182609	69.83
	6270.0	555.43	17515628.	767.0	70234	

Design forces and moments
(C/E = characteristic plastic/elastic, D=plast.Design, F=elast. Design)

	N[kN]	Vy[kN]	Vz[kN]	Mt[kNm]	My[kNm]	Mz[kNm]	y[mm]	z[mm]	BUCK
C	77982.1	63023.05	48693.83	100102.8	66048.22	101154.6	31.1	-66.2	c c
C	-80603.9				117784.5	0.00	0.0	771.4	COMB
C	-34028.7				0.00	101534.0	0.0	0.0	COMB
C	-138715.	63023.05	48693.83	100102.8	-57561.9	-101086.	-31.1	411.4	
C	12546.5				-59821.0	0.00	0.0	771.4	COMB
C	-34028.7				0.00	-101534.	0.0	0.0	COMB
E	71273.0	8660.73	11539.35	512.62	39236.15	26262.45	0.0	771.4	
E	-71273.0	8660.73	11539.35	512.62	-39236.1	-26262.4	0.0	771.4	
D	67810.5	47455.85	36787.11	66914.77	56326.74	76387.75	20.2	-73.9	
D	-56732.6				90173.59	0.00	0.0	771.4	COMB
D	-22685.8				0.00	76587.02	0.0	0.0	COMB
D	-108299.	47455.85	36787.10	66914.75	-49401.1	-76357.8	-20.2	396.5	
D	11360.9				-51531.3	0.00	0.0	771.4	COMB
D	-22685.8				0.00	-76587.0	0.0	0.0	COMB
F	61976.5	7531.07	10034.22	341.75	34118.39	22836.91	0.0	771.4	
F	-61976.5	7531.07	10034.22	341.75	-34118.4	-22836.9	0.0	771.4	

Additional Design Data

M	periphery-O/-I [m2/m]	[m2/m]	deff [mm]	t-min [mm]	t-max [mm]	SMP [o/o]	thet-p [tm2/m]	thet-y [tm2/m]	thet-z [tm2/m]	thet-yz [tm2/m]
	51.533		8.3	3.1	300.0	0.0	25.235	2.582	22.653	
1	6.861		48.7	45.0	52.0	0.0	0.702	0.671	0.031	
25	0.126		1174.0			0.0	0.000	0.000		
**	0.004		32.0			0.0	0.000		0.000	
31	16.530		265.5	50.0	300.0	0.0	22.626	0.004	22.622	
**	28.012		3.1	3.1	3.1	0.0	0.000	0.000	0.000	

Cross section No. 280.1 = CS 1 - steel alone

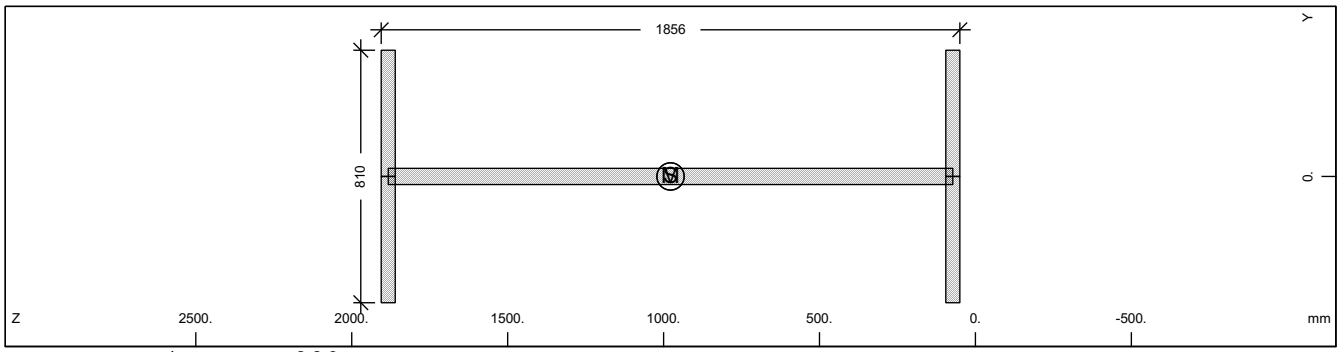

Cross section No. 280

Static properties of cross section

Mat NoR	A[cm2] It[cm4]	Ay/Az/Ayz [cm2]	Iy/Iz/Iyz [cm4]	ys/zs [mm]	modules [N/mm2]	gam [kN/m]
1	1670.47	607.50	8545859.2	0.0	210000	13.11
	6270.0	887.99	398580.9	977.8	80769	

Additional static properties of cross section

Alfa-T [1/°K]	ymin ymax [mm]	zmin zmax [mm]	hymin hzmin [mm]	AK AB [cm2]	MB	Tau-T Tau-B [1/m3]	Tau-Vy Tau-Vz [1/m2]
1.2E-05	-405.0	-927.8		9.916E+02		3.879E+02	2.058E+01
	405.0	927.8				1.255E+02	1.222E+01

SOFiSTiK AG - www.sofistik.de

Composite bridge 38+50+38, b=14.25m, 2x2HL1100R HISTAR460 , slab 0.30m C30/37

Section values for warping

Wmin[cm2]	Wmax[cm2]	CM[cm6]	CMS[cm4]	ASwyy[cm6]	ASwzz[cm6]	ry[mm]	rz[mm]
-3666.30	3666.303266341532.	4978419.1	1.54	32.93	0.0	0.0	

Design values of cross section

Mat NoR	A[cm2] It[cm4]	Ay/Az/Ayz [cm2]	Iy/Iz/Iyz [cm4]	ys/zs [mm]	modules [N/mm2]	gam [kN/m]
1	1670.47	607.50	8545859.2	0.0	182609	13.11
	6270.0	887.99	398580.9	977.8	70234	

Design forces and moments
(C/E = characteristic plastic/elastic, D=plast.Design, F=elast. Design)

	N[kN]	Vy[kN]	Vz[kN]	Mt[kNm]	My[kNm]	Mz[kNm]	y[mm]	z[mm]	BUCK
C	55960.7	14099.76	18209.17	790.68	36383.34	5355.36	0.0	977.8	c c
C	0.0				0.00	0.00	0.0	0.0	COMB
E	55960.7	9399.84	15827.62	498.65	30857.85	3296.90	0.0	977.8	
D	48661.5	12260.66	15834.06	687.55	31637.68	4656.84	0.0	977.8	
D	0.0				0.00	0.00	0.0	0.0	COMB
F	48661.5	8173.78	13763.15	433.61	26832.91	2866.87	0.0	977.8	

Additional Design Data

M	periphery-O/-I [m2/m]	[m2/m]	deff [mm]	t-min [mm]	t-max [mm]	SMP [o/o]	thet-p [tm2/m]	thet-y [tm2/m]	thet-z [tm2/m]	thet-yz [tm2/m]
	6.861		48.7	45.0	52.0	0.0	0.702	0.671	0.031	

Cross section No. 280.2 = CS 10 - prefab. slab C1

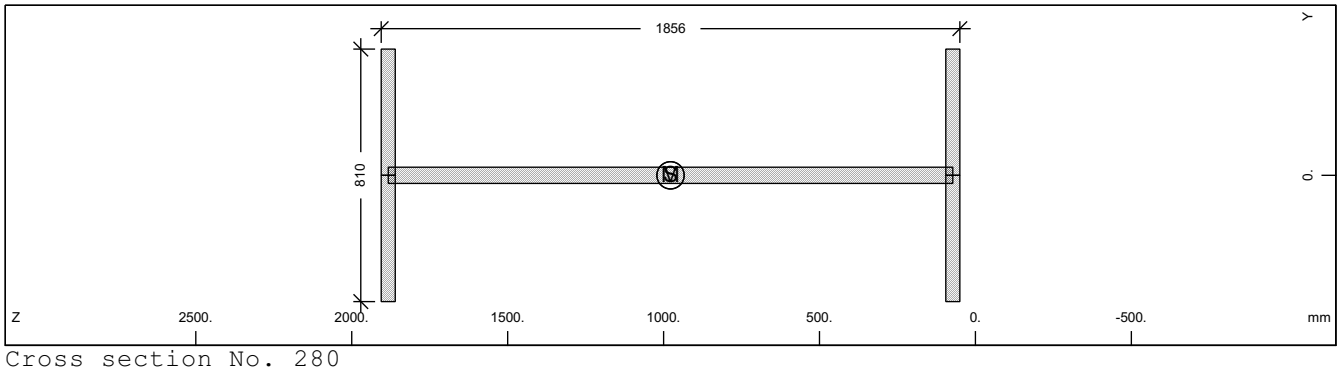

Cross section No. 280

Static properties of cross section

Mat NoR	A[cm2] It[cm4]	Ay/Az/Ayz [cm2]	Iy/Iz/Iyz [cm4]	ys/zs [mm]	modules [N/mm2]	gam [kN/m]
1	1670.47	607.50	8545859.2	0.0	210000	13.11
	6270.0	887.99	398580.9	977.8	80769	

Additional static properties of cross section

Alfa-T [1/°K]	ymin ymax [mm]	zmin zmax [mm]	hymin hzmin [mm]	AK AB [cm2]	MB	Tau-T Tau-B [1/m3]	Tau-Vy Tau-Vz [1/m2]
1.2E-05	-405.0	-927.8		9.916E+02		3.879E+02	2.058E+01
	405.0	927.8				1.255E+02	1.222E+01

Section values for warping

Wmin[cm2]	Wmax[cm2]	CM[cm6]	CMS[cm4]	ASwyy[cm6]	ASwzz[cm6]	ry[mm]	rz[mm]
-3666.30	3666.303266341532.	4978419.1	1.54	32.93	0.0	0.0	

Design values of cross section

Mat NoR	A[cm2] It[cm4]	Ay/Az/Ayz [cm2]	Iy/Iz/Iyz [cm4]	ys/zs [mm]	modules [N/mm2]	gam [kN/m]
1	1670.47	607.50	8545859.2	0.0	182609	13.11
	6270.0	887.99	398580.9	977.8	70234	

SOFiSTiK AG - www.sofistik.de

Composite bridge 38+50+38, b=14.25m, 2x2HL1100R HISTAR460 , slab 0.30m C30/37

Design forces and moments
(C/E = characteristic plastic/elastic, D=plast.Design, F=elast. Design)

	N[kN]	Vy[kN]	Vz[kN]	Mt[kNm]	My[kNm]	Mz[kNm]	y[mm]	z[mm]	BUCK
C	55960.7	14099.76	18209.17	790.68	36383.34	5355.36	0.0	977.8	c c
C	0.0				0.00	0.00	0.0	0.0	COMB
E	55960.7	9399.84	15827.62	498.65	30857.85	3296.90	0.0	977.8	
D	48661.5	12260.66	15834.06	687.55	31637.68	4656.84	0.0	977.8	
D	0.0				0.00	0.00	0.0	0.0	COMB
F	48661.5	8173.78	13763.15	433.61	26832.91	2866.87	0.0	977.8	

Additional Design Data

M	periphery-O/-I [m2/m]	[m2/m]	deff [mm]	t-min [mm]	t-max [mm]	SMP [o/o]	thet-p [tm2/m]	thet-y [tm2/m]	thet-z [tm2/m]	thet-yz [tm2/m]
	6.861		48.7	45.0	52.0	0.0	0.702	0.671	0.031	

Cross section No. 280.3 = CS 20 - in-situ conc:C2

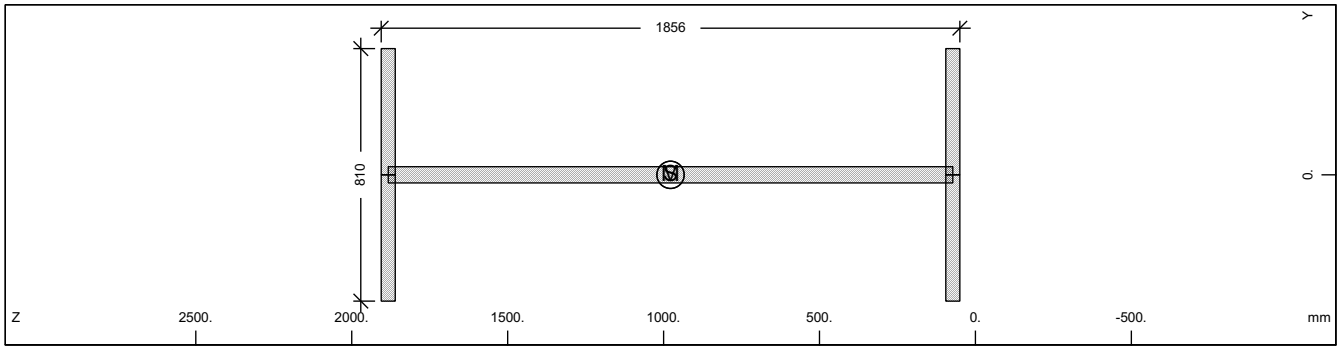

Cross section No. 280

Static properties of cross section

Mat NoR	A[cm2] It[cm4]	Ay/Az/Ayz [cm2]	Iy/Iz/Iyz [cm4]	ys/zs [mm]	modules [N/mm2]	gam [kN/m]
1	1670.47	607.50	8545859.2	0.0	210000	13.11
	6270.0	887.99	398580.9	977.8	80769	

Additional static properties of cross section

Alfa-T [1/°K]	ymin ymax [mm]	zmin zmax [mm]	hymin hzmin [mm]	AK AB [cm2]	MB	Tau-T Tau-B [1/m3]	Tau-Vy Tau-Vz [1/m2]
1.2E-05	-405.0	-927.8		9.916E+02		3.879E+02	2.058E+01
	405.0	927.8				1.255E+02	1.222E+01

Section values for warping

Wmin[cm2]	Wmax[cm2]	CM[cm6]	CMS[cm4]	ASwyy[cm6]	ASwzz[cm6]	ry[mm]	rz[mm]
-3666.30	3666.303266341532.		4978419.1	1.54	32.93	0.0	0.0

Design values of cross section

Mat NoR	A[cm2] It[cm4]	Ay/Az/Ayz [cm2]	Iy/Iz/Iyz [cm4]	ys/zs [mm]	modules [N/mm2]	gam [kN/m]
1	1670.47	607.50	8545859.2	0.0	182609	13.11
	6270.0	887.99	398580.9	977.8	70234	

Design forces and moments
(C/E = characteristic plastic/elastic, D=plast.Design, F=elast. Design)

	N[kN]	Vy[kN]	Vz[kN]	Mt[kNm]	My[kNm]	Mz[kNm]	y[mm]	z[mm]	BUCK
C	55960.7	14099.76	18209.17	790.68	36383.34	5355.36	0.0	977.8	c c
C	0.0				0.00	0.00	0.0	0.0	COMB
E	55960.7	9399.84	15827.62	498.65	30857.85	3296.90	0.0	977.8	
D	48661.5	12260.66	15834.06	687.55	31637.68	4656.84	0.0	977.8	
D	0.0				0.00	0.00	0.0	0.0	COMB
F	48661.5	8173.78	13763.15	433.61	26832.91	2866.87	0.0	977.8	

SOFiSTiK AG - www.sofistik.de

Composite bridge 38+50+38, b=14.25m, 2x2HL1100R HISTAR460 , slab 0.30m C30/37

Additional Design Data

M	periphery-O/-I [m2/m]	[m2/m]	deff [mm]	t-min [mm]	t-max [mm]	SMP [o/o]	thet-p [tm2/m]	thet-y [tm2/m]	thet-z [tm2/m]	thet-yz [tm2/m]
	6.861		48.7	45.0	52.0	0.0	0.702	0.671	0.031	

Cross section No. 280.4 = CS 21 - reinf active:C2

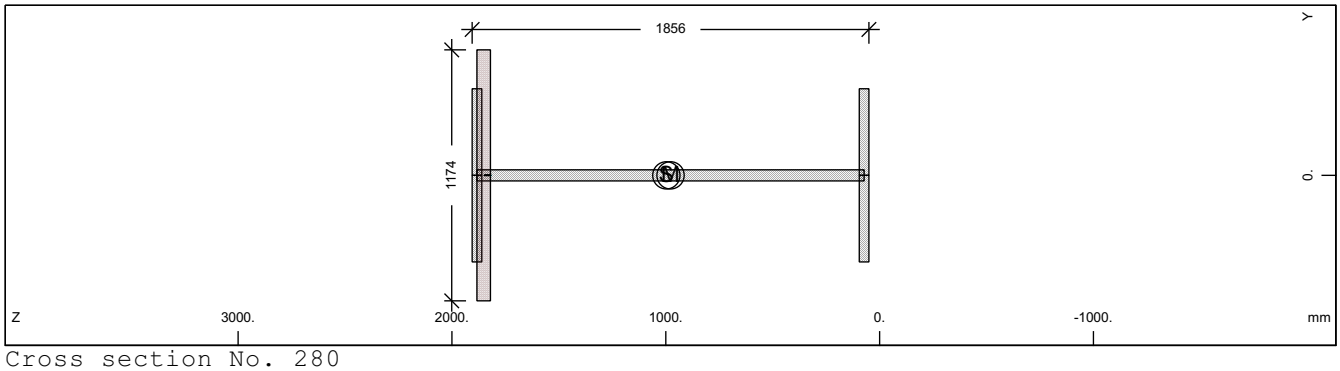

Cross section No. 280

Static properties of cross section

Mat NoR	A[cm2] It[cm4]	Ay/Az/Ayz [cm2]	Iy/Iz/Iyz [cm4]	ys/zs [mm]	modules [N/mm2]	gam [kN/m]
1	1708.71	607.50	8831177.7	0.0	210000	14.97
	6270.0	889.10	398580.9	997.3	80769	

Additional static properties of cross section

Alfa-T [1/°K]	ymin ymax [mm]	zmin zmax [mm]	hymin hzmin [mm]	AK AB [cm2]	MB	Tau-T Tau-B [1/m3]	Tau-Vy Tau-Vz [1/m2]
1.2E-05	-587.0	-947.3		5.292E+02		3.219E+01	2.058E+01
	587.0	908.2		7.408E+02		1.255E+02	1.218E+01

Section values for warping

Wmin[cm2]	Wmax[cm2]	CM[cm6]	CMS[cm4]	ASwyy[cm6]	ASwzz[cm6]	ry[mm]	rz[mm]
-3666.30	3666.30	3266341532.	4978419.5	-1.82	-40.23	0.0	8.4

Partial cross sections

Mat NoR	A[cm2] It[cm4]	Ay/Az/Ayz [cm2]	Iy/Iz/Iyz [cm4]	ys/zs [mm]	modules [N/mm2]	gam [kN/m]
1	1670.47	607.50	8545859.2	0.0	210000	13.11
	13406.5	889.07	398580.9	977.8	80769	
25	740.81		2458.1	0.0	10667	1.85
	3403465.1	0.61	0.0	1851.5	4444	
210	0.64	0.00	0.0	0.0	200000	0.00
	2.2	0.00	0.0	1833.0	76923	

Design values of cross section

Mat NoR	A[cm2] It[cm4]	Ay/Az/Ayz [cm2]	Iy/Iz/Iyz [cm4]	ys/zs [mm]	modules [N/mm2]	gam [kN/m]
1	1699.93	607.50	8766760.0	0.0	182609	14.97
	6270.0	889.10	398580.9	992.9	70234	

Design forces and moments
(C/E = characteristic plastic/elastic, D=plast.Design, F=elast. Design)

	N[kN]	Vy[kN]	Vz[kN]	Mt[kNm]	My[kNm]	Mz[kNm]	y[mm]	z[mm]	BUCK
C	55992.9	14118.33	19893.38	1515.88	36410.82	5683.24	0.9	978.7	c c
C	-648.9				36416.86	0.00	0.0	997.3	COMB
C	-1111.2				0.00	5681.76	0.0	0.0	COMB
C	-58215.3	14118.33	19893.38	1515.88	-38279.6	-5681.16	-0.9	1042.	
C	-1573.6				-38315.2	0.00	0.0	997.3	COMB
C	-1111.2				0.00	-5681.76	0.0	0.0	COMB
E	57241.8	9399.84	15875.84	512.59	31230.11	3296.90	0.0	997.3	
E	-57241.8	9399.84	15875.84	512.59	-31230.1	-3296.90	0.0	997.3	
D	48689.4	12276.81	17050.59	1172.58	31661.58	4875.16	0.7	978.7	

SOFiSTiK AG - www.sofistik.de

Composite bridge 38+50+38, b=14.25m, 2x2HL1100R HISTAR460 , slab 0.30m C30/37

Design forces and moments
(C/E = characteristic plastic/elastic, D=plast.Design, F=elast. Design)

	N[kN]	Vy[kN]	Vz[kN]	Mt[kNm]	My[kNm]	Mz[kNm]	y[mm]	z[mm]	BUCK
D	-564.2				31666.84	0.00	0.0	997.3	COMB
D	-740.8				0.00	4874.49	0.0	0.0	COMB
D	-50171.1	12276.81	17050.59	1172.58	-32918.5	-4874.14	-0.7	1028.	
D	-917.4				-32932.4	0.00	0.0	997.3	COMB
D	-740.8				0.00	-4874.49	0.0	0.0	COMB
F	49775.5	8173.78	13805.08	341.73	27156.62	2866.87	0.0	997.3	
F	-49775.5	8173.78	13805.08	341.73	-27156.6	-2866.87	0.0	997.3	

Additional Design Data

M	periphery-O/-I [m2/m]	[m2/m]	deff [mm]	t-min [mm]	t-max [mm]	SMP [o/o]	thet-p [tm2/m]	thet-y [tm2/m]	thet-z [tm2/m]	thet-yz [tm2/m]
	6.991		48.9	32.0	63.1	0.0	0.826	0.795	0.031	
1	6.861		48.7	45.0	52.0	0.0	0.702	0.671	0.031	
25	0.126		1174.0			0.0	0.000	0.000		
**	0.004		32.0			0.0	0.000		0.000	

Cross section No. 280.5 = CS 30 - in-situ conc:C3

Cross section No. 281 - VFT (253)

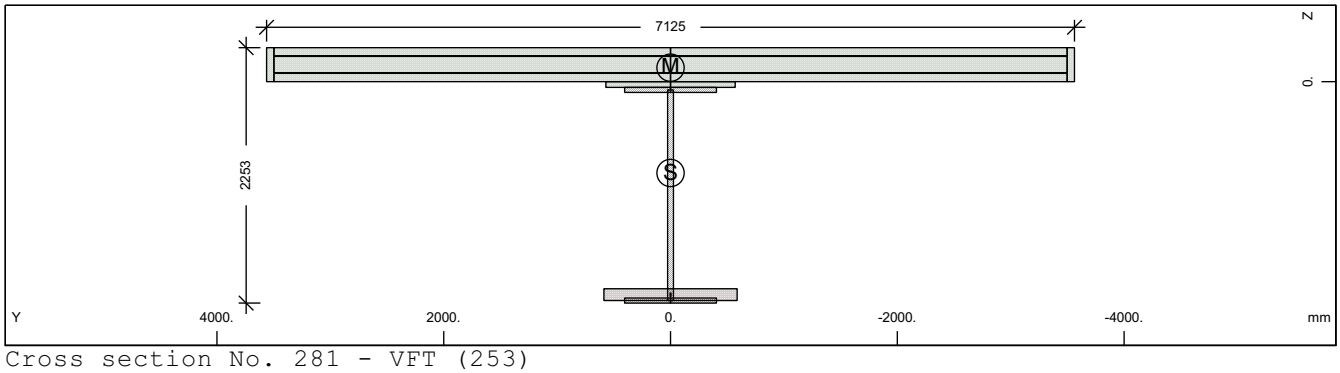

Cross section No. 281 - VFT (253)

Static properties of cross section

Mat NoR	A[cm2] It[cm4]	Ay/Az/Ayz [cm2]	Iy/Iz/Iyz [cm4]	ys/zs [mm]	y/z-sc [mm]	modules [N/mm2]	gam [kN/m]
1	2176.05	365.04	14284445.	0.0	0.0	210000	71.22
	6270.0	582.09	17462924.	805.2	-123.7	80769	

Additional static properties of cross section

Alfa-T [1/°K]	ymin ymax [mm]	zmin zmax [mm]	hymin hzmin [mm]	AK AB [cm2]	MB	Tau-T Tau-B [1/m3]	Tau-Vy Tau-Vz [1/m2]
1.2E-05	-3562.5	-1105.2		8.489E+02		2.007E+01	3.336E+01
	3562.5	1147.6		2.316E+04		1.255E+02	2.403E+01

Section values for warping

Wmin[cm2]	Wmax[cm2]	CM[cm6]	CMS[cm4]	ASwyy[cm6]	ASwzz[cm6]	ry[mm]	rz[mm]
-8319.05	8319.059	563053065.	1568330.5	-406.49	-332.50	0.0	899.1

Partial cross sections

Mat NoR	A[cm2] It[cm4]	Ay/Az/Ayz [cm2]	Iy/Iz/Iyz [cm4]	ys/zs [mm]	modules [N/mm2]	gam [kN/m]
1	1695.09	0.11	9069510.6	0.0	210000	13.31
	13628.4	319.30	398580.9	1001.4	80769	
25	1219.39		10962.4	0.0	10667	3.05
	5602165.0	0.70	0.0	1878.4	4444	
210	0.64	0.00	0.0	0.0	200000	0.00
	2.2	0.00	0.0	1880.4	76923	
31	21945.00	17092.16	170028.4	0.0	0	54.86
	6417251.4	11680.08	904880243.	-145.5	0	

SOFiSTiK AG - www.sofistik.de

Composite bridge 38+50+38, b=14.25m, 2x2HL1100R HISTAR460 , slab 0.30m C30/37

300	439.33	383.17	24712.4	0.0	200000	0.00
	14.4	275.37	17917556.	-150.0	76923	

Design values of cross section

Mat	A[cm2]	Ay/Az/Ayz	Iy/Iz/Iyz	ys/zs	modules	gam
NoR	It[cm4]	[cm2]	[cm4]	[mm]	[N/mm2]	[kN/m]
1	2161.60	365.04	14116754.	0.0	182609	71.22
	6270.0	581.59	17462923.	798.1	70234	

Design forces and moments
(C/E = characteristic plastic/elastic, D=plast.Design, F=elast. Design)

	N[kN]	Vy[kN]	Vz[kN]	Mt[kNm]	My[kNm]	Mz[kNm]	y[mm]	z[mm]	BUCK
C	78784.3	63010.00	49959.69	100578.7	68499.69	101328.1	29.3	-34.2	c c
C	-80934.3				121995.8	0.00	0.0	805.2	COMB
C	-34746.6				0.00	101676.4	0.0	0.0	COMB
C	-140522.	63010.00	49959.69	100578.7	-61453.8	-101221.	-29.3	477.0	
C	11441.1				-63332.4	0.00	0.0	805.2	COMB
C	-34746.6				0.00	-101676.	0.0	0.0	COMB
E	72897.7	8652.44	12014.85	822.21	41697.45	26210.35	0.0	805.2	
E	-72897.7	8652.44	12014.85	822.21	-41697.4	-26210.3	0.0	805.2	
D	68508.1	47444.51	37727.63	67234.53	58249.80	76484.05	20.1	-73.7	
D	-57019.8				93384.01	0.00	0.0	805.2	COMB
D	-23164.4				0.00	76668.05	0.0	0.0	COMB
D	-109666.	47444.51	37727.63	67234.54	-52388.7	-76435.0	-20.1	452.4	
D	10691.0				-54275.1	0.00	0.0	805.2	COMB
D	-23164.4				0.00	-76668.0	0.0	0.0	COMB
F	63389.3	7523.86	10447.69	548.14	36258.65	22791.61	0.0	805.2	
F	-63389.3	7523.86	10447.69	548.14	-36258.7	-22791.6	0.0	805.2	

Additional Design Data

M	periphery-O/-I		deff	t-min	t-max	SMP	thet-p	thet-y	thet-z	thet-yz
	[m2/m]	[m2/m]	[mm]	[mm]	[mm]	[o/o]	[tm2/m]	[tm2/m]	[tm2/m]	[tm2/m]
	51.680		8.4	3.1	300.0	0.0	25.724	3.071	22.653	
1	6.956		48.7	45.0	52.0	0.0	0.743	0.712	0.031	
25	0.208		1174.0			0.0	0.000	0.000		
**	0.004		32.0			0.0	0.000		0.000	
31	16.530		265.5	50.0	300.0	0.0	22.626	0.004	22.622	
**	27.983		3.1	3.1	3.1	0.0	0.000	0.000	0.000	

Cross section No. 281.1 = CS 1 - steel alone

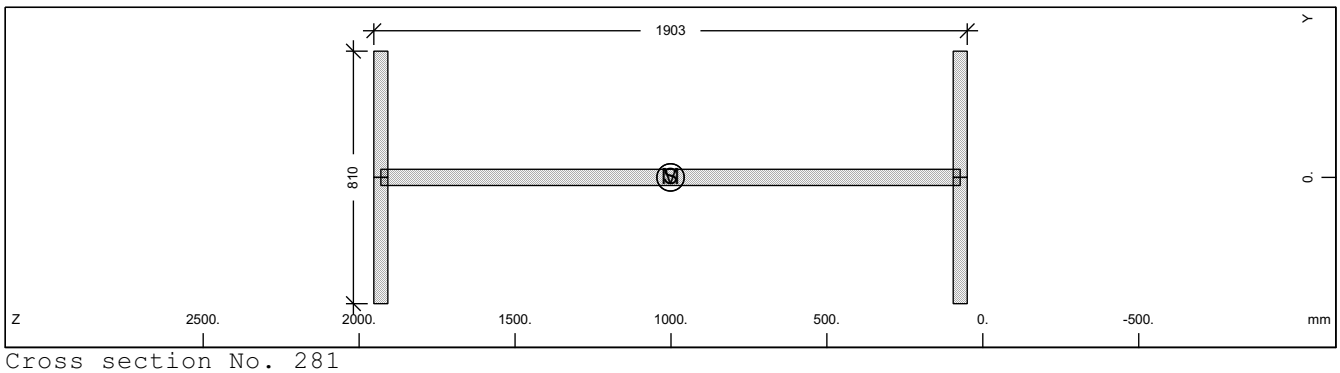

Cross section No. 281

Static properties of cross section

Mat	A[cm2]	Ay/Az/Ayz	Iy/Iz/Iyz	ys/zs	modules	gam
NoR	It[cm4]	[cm2]	[cm4]	[mm]	[N/mm2]	[kN/m]
1	1695.09	607.50	9069510.6	0.0	210000	13.31
	6270.0	912.12	398580.9	1001.4	80769	

SOFiSTiK AG - www.sofistik.de

Composite bridge 38+50+38, b=14.25m, 2x2HL1100R HISTAR460 , slab 0.30m C30/37

Additional static properties of cross section

Alfa-T	ymin ymax	zmin zmax	hymin hzmin	AK AB	MB	Tau-T Tau-B	Tau-Vy Tau-Vz
[1/°K]	[mm]	[mm]	[mm]	[cm2]		[1/m3]	[1/m2]
1.2E-05	-405.0	-951.4		1.008E+03		3.816E+02	2.058E+01
	405.0	951.4				1.255E+02	1.194E+01

Section values for warping

Wmin[cm2]	Wmax[cm2]	CM[cm6]	CMS[cm4]	ASwyy[cm6]	ASwzz[cm6]	ry[mm]	rz[mm]
-3762.18	3762.183439418985.		5242217.0	-3.63	-82.51	0.0	0.0

Design values of cross section

Mat NoR	A[cm2] It[cm4]	Ay/Az/Ayz [cm2]	Iy/Iz/Iyz [cm4]	ys/zs [mm]	modules [N/mm2]	gam [kN/m]
1	1695.09	607.50	9069510.6	0.0	182609	13.31
	6270.0	912.12	398580.9	1001.4	70234	

Design forces and moments
(C/E = characteristic plastic/elastic, D=plast.Design, F=elast. Design)

	N[kN]	Vy[kN]	Vz[kN]	Mt[kNm]	My[kNm]	Mz[kNm]	y[mm]	z[mm]	BUCK
C	56785.5	14099.76	18685.38	803.06	37717.94	5366.09	0.0	1001.	c c
C	0.0				0.00	0.00	0.0	0.0	COMB
E	56785.5	9399.84	16203.11	506.91	31933.79	3296.90	0.0	1001.	
D	49378.7	12260.66	16248.16	698.32	32798.21	4666.16	0.0	1001.	
D	0.0				0.00	0.00	0.0	0.0	COMB
F	49378.7	8173.78	14089.66	440.79	27768.51	2866.87	0.0	1001.	

Additional Design Data

M	periphery-O/-I [m2/m]	[m2/m]	deff [mm]	t-min [mm]	t-max [mm]	SMP [o/o]	thet-p [tm2/m]	thet-y [tm2/m]	thet-z [tm2/m]	thet-yz [tm2/m]
	6.956		48.7	45.0	52.0	0.0	0.743	0.712	0.031	

Cross section No. 281.2 = CS 10 - prefab. slab C1

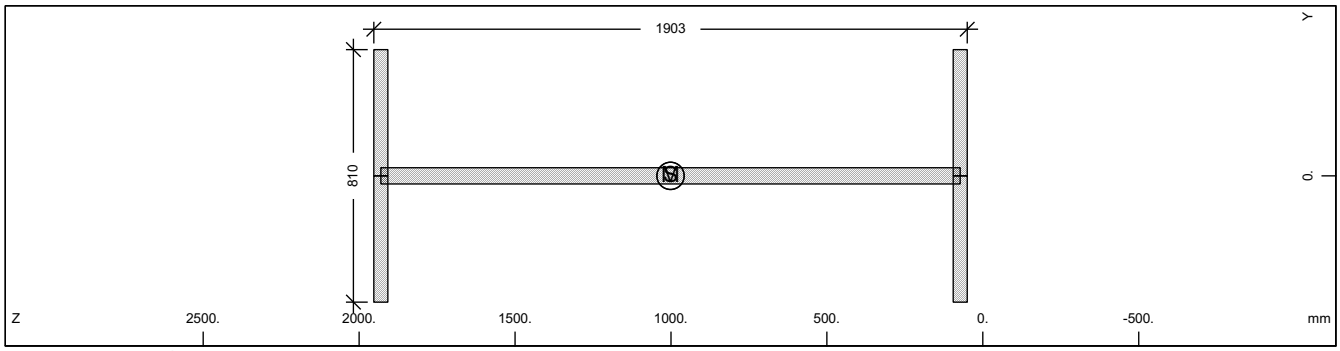

Cross section No. 281

Static properties of cross section

Mat NoR	A[cm2] It[cm4]	Ay/Az/Ayz [cm2]	Iy/Iz/Iyz [cm4]	ys/zs [mm]	modules [N/mm2]	gam [kN/m]
1	1695.09	607.50	9069510.6	0.0	210000	13.31
	6270.0	912.12	398580.9	1001.4	80769	

Additional static properties of cross section

Alfa-T	ymin ymax	zmin zmax	hymin hzmin	AK AB	MB	Tau-T Tau-B	Tau-Vy Tau-Vz
[1/°K]	[mm]	[mm]	[mm]	[cm2]		[1/m3]	[1/m2]
1.2E-05	-405.0	-951.4		1.008E+03		3.816E+02	2.058E+01
	405.0	951.4				1.255E+02	1.194E+01

Section values for warping

Wmin[cm2]	Wmax[cm2]	CM[cm6]	CMS[cm4]	ASwyy[cm6]	ASwzz[cm6]	ry[mm]	rz[mm]
-3762.18	3762.183439418985.		5242217.0	-3.63	-82.51	0.0	0.0

SOFiSTiK AG - www.sofistik.de

Composite bridge 38+50+38, b=14.25m, 2x2HL1100R HISTAR460 , slab 0.30m C30/37

Design values of cross section

Mat NoR	A[cm2] It[cm4]	Ay/Az/Ayz [cm2]	Iy/Iz/Iyz [cm4]	ys/zs [mm]	modules [N/mm2]	gam [kN/m]
1	1695.09	607.50	9069510.6	0.0	182609	13.31
	6270.0	912.12	398580.9	1001.4	70234	

Design forces and moments
(C/E = characteristic plastic/elastic, D=plast.Design, F=elast. Design)

	N[kN]	Vy[kN]	Vz[kN]	Mt[kNm]	My[kNm]	Mz[kNm]	y[mm]	z[mm]	BUCK
C	56785.5	14099.76	18685.38	803.06	37717.94	5366.09	0.0	1001.	c c
C	0.0				0.00	0.00	0.0	0.0	COMB
E	56785.5	9399.84	16203.11	506.91	31933.79	3296.90	0.0	1001.	
D	49378.7	12260.66	16248.16	698.32	32798.21	4666.16	0.0	1001.	
D	0.0				0.00	0.00	0.0	0.0	COMB
F	49378.7	8173.78	14089.66	440.79	27768.51	2866.87	0.0	1001.	

Additional Design Data

M	periphery-O/-I [m2/m] [m2/m]	deff [mm]	t-min [mm]	t-max [mm]	SMP [o/o]	thet-p [tm2/m]	thet-y [tm2/m]	thet-z [tm2/m]	thet-yz [tm2/m]
	6.956	48.7	45.0	52.0	0.0	0.743	0.712	0.031	

Cross section No. 281.3 = CS 20 - in-situ conc:C2

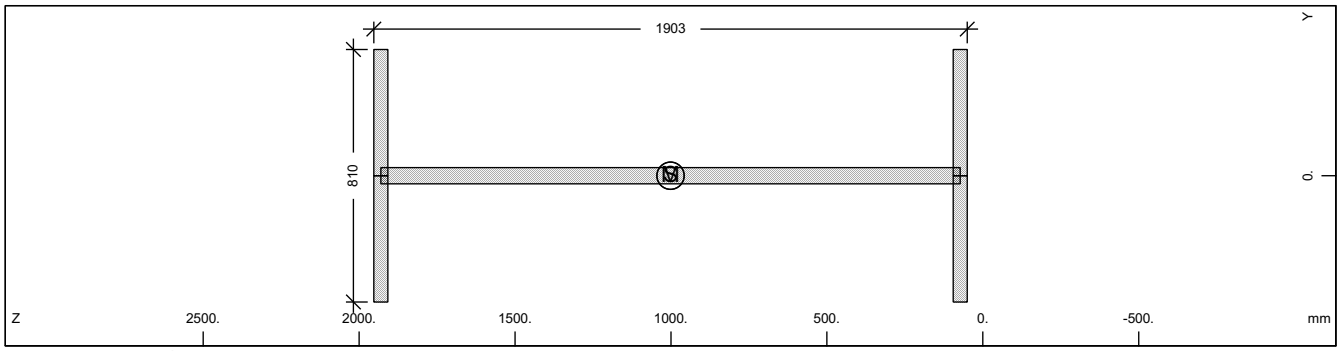

Cross section No. 281

Static properties of cross section

Mat NoR	A[cm2] It[cm4]	Ay/Az/Ayz [cm2]	Iy/Iz/Iyz [cm4]	ys/zs [mm]	modules [N/mm2]	gam [kN/m]
1	1695.09	607.50	9069510.6	0.0	210000	13.31
	6270.0	912.12	398580.9	1001.4	80769	

Additional static properties of cross section

Alfa-T [1/°K]	ymin ymax [mm]	zmin zmax [mm]	hymin hzmin [mm]	AK AB [cm2]	MB	Tau-T Tau-B [1/m3]	Tau-Vy Tau-Vz [1/m2]
1.2E-05	-405.0	-951.4		1.008E+03		3.816E+02	2.058E+01
	405.0	951.4				1.255E+02	1.194E+01

Section values for warping

Wmin[cm2]	Wmax[cm2]	CM[cm6]	CMS[cm4]	ASwyy[cm6]	ASwzz[cm6]	ry[mm]	rz[mm]
-3762.18	3762.183439418985.	5242217.0		-3.63	-82.51	0.0	0.0

Design values of cross section

Mat NoR	A[cm2] It[cm4]	Ay/Az/Ayz [cm2]	Iy/Iz/Iyz [cm4]	ys/zs [mm]	modules [N/mm2]	gam [kN/m]
1	1695.09	607.50	9069510.6	0.0	182609	13.31
	6270.0	912.12	398580.9	1001.4	70234	

Design forces and moments
(C/E = characteristic plastic/elastic, D=plast.Design, F=elast. Design)

	N[kN]	Vy[kN]	Vz[kN]	Mt[kNm]	My[kNm]	Mz[kNm]	y[mm]	z[mm]	BUCK
C	56785.5	14099.76	18685.38	803.06	37717.94	5366.09	0.0	1001.	c c
C	0.0				0.00	0.00	0.0	0.0	COMB
E	56785.5	9399.84	16203.11	506.91	31933.79	3296.90	0.0	1001.	

SOFiSTiK AG - www.sofistik.de

Composite bridge 38+50+38, b=14.25m, 2x2HL1100R HISTAR460 , slab 0.30m C30/37

Design forces and moments
(C/E = characteristic plastic/elastic, D=plast.Design, F=elast. Design)

	N[kN]	Vy[kN]	Vz[kN]	Mt[kNm]	My[kNm]	Mz[kNm]	y[mm]	z[mm]	BUCK
D	49378.7	12260.66	16248.16	698.32	32798.21	4666.16	0.0	1001.	
D	0.0				0.00	0.00	0.0	0.0	COMB
F	49378.7	8173.78	14089.66	440.79	27768.51	2866.87	0.0	1001.	

Additional Design Data

M	periphery-O/-I [m2/m]	[m2/m]	deff [mm]	t-min [mm]	t-max [mm]	SMP [o/o]	thet-p [tm2/m]	thet-y [tm2/m]	thet-z [tm2/m]	thet-yz [tm2/m]
	6.956		48.7	45.0	52.0	0.0	0.743	0.712	0.031	

Cross section No. 281.4 = CS 21 - reinf active:C2

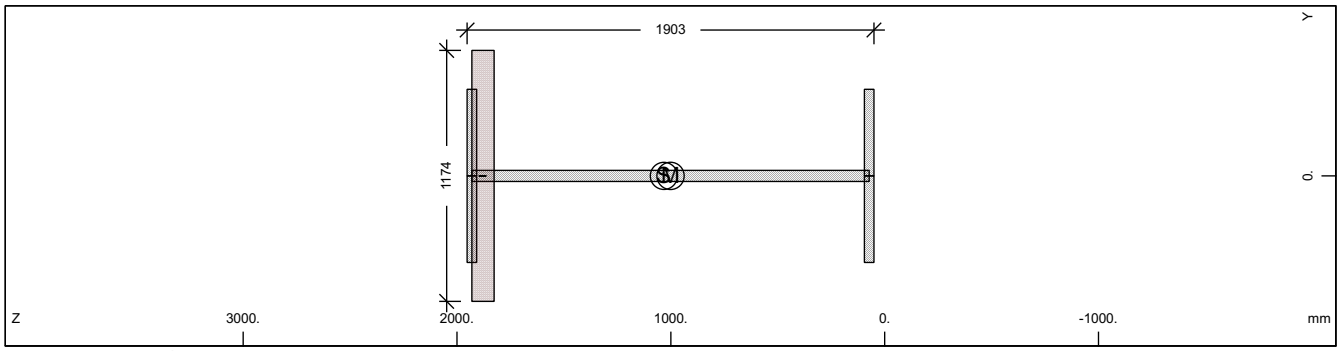

Cross section No. 281

Static properties of cross section

Mat NoR	A[cm2] It[cm4]	Ay/Az/Ayz [cm2]	Iy/Iz/Iyz [cm4]	ys/zs [mm]	modules [N/mm2]	gam [kN/m]
1	1757.64	607.50	9534053.6	0.0	210000	16.35
	6270.0	911.68	398580.9	1032.6	80769	

Additional static properties of cross section

Alfa-T [1/°K]	ymin ymax [mm]	zmin zmax [mm]	hymin hzmin [mm]	AK AB [cm2]	MB	Tau-T Tau-B [1/m3]	Tau-Vy Tau-Vz [1/m2]
1.2E-05	-587.0	-982.6		8.489E+02		2.007E+01	2.058E+01
	587.0	920.2		1.219E+03		1.255E+02	1.189E+01

Section values for warping

Wmin[cm2]	Wmax[cm2]	CM[cm6]	CMS[cm4]	ASwyy[cm6]	ASwzz[cm6]	ry[mm]	rz[mm]
-3762.18	3762.183439419451.		5242217.4	2.71	64.86	0.0	11.8

Partial cross sections

Mat NoR	A[cm2] It[cm4]	Ay/Az/Ayz [cm2]	Iy/Iz/Iyz [cm4]	ys/zs [mm]	modules [N/mm2]	gam [kN/m]
1	1695.09	607.50	9069510.6	0.0	210000	13.31
	13628.4	911.55	398580.9	1001.4	80769	
25	1219.39		10962.4	0.0	10667	3.05
	5602165.0	2.37	0.0	1878.4	4444	
210	0.64	0.00	0.0	0.0	200000	0.00
	2.2	0.00	0.0	1880.4	76923	

Design values of cross section

Mat NoR	A[cm2] It[cm4]	Ay/Az/Ayz [cm2]	Iy/Iz/Iyz [cm4]	ys/zs [mm]	modules [N/mm2]	gam [kN/m]
1	1743.19	607.50	9429682.8	0.0	182609	16.35
	6270.0	911.65	398580.9	1025.6	70234	

Design forces and moments
(C/E = characteristic plastic/elastic, D=plast.Design, F=elast. Design)

	N[kN]	Vy[kN]	Vz[kN]	Mt[kNm]	My[kNm]	Mz[kNm]	y[mm]	z[mm]	BUCK
C	56817.7	14118.33	21159.24	1991.79	37746.19	5907.01	1.4	1002.	c c
C	-1055.2				37762.17	0.00	0.0	1033.	COMB

SOFiSTiK AG - www.sofistik.de

Composite bridge 38+50+38, b=14.25m, 2x2HL1100R HISTAR460 , slab 0.30m C30/37

Design forces and moments
(C/E = characteristic plastic/elastic, D=plast.Design, F=elast. Design)

	N[kN]	Vy[kN]	Vz[kN]	Mt[kNm]	My[kNm]	Mz[kNm]	y[mm]	z[mm]	BUCK
C	-1829.1				0.00	5903.18	0.0	0.0	COMB
C	-60475.8	14118.33	21159.24	1991.79	-40759.0	-5901.90	-1.4	1107.	
C	-2602.9				-40856.2	0.00	0.0	1033.	COMB
C	-1829.1				0.00	-5903.18	0.0	0.0	COMB
E	58880.9	9399.84	16261.60	822.17	32503.23	3296.90	0.0	1033.	
E	-58880.9	9399.84	16261.60	822.17	-32503.2	-3296.90	0.0	1033.	
D	49406.7	12276.81	17991.11	1492.36	32822.77	5026.23	1.1	1002.	
D	-917.6				32836.67	0.00	0.0	1033.	COMB
D	-1219.4				0.00	5024.28	0.0	0.0	COMB
D	-51845.4	12276.81	17991.11	1492.36	-34861.2	-5023.62	-1.1	1083.	
D	-1521.2				-34899.4	0.00	0.0	1033.	COMB
D	-1219.4				0.00	-5024.28	0.0	0.0	COMB
F	51200.8	8173.78	14140.53	548.11	28263.67	2866.87	0.0	1033.	
F	-51200.8	8173.78	14140.53	548.11	-28263.7	-2866.87	0.0	1033.	

Additional Design Data

M	periphery-O/-I [m2/m]	[m2/m]	deff [mm]	t-min [mm]	t-max [mm]	SMP [o/o]	thet-p [tm2/m]	thet-y [tm2/m]	thet-z [tm2/m]	thet-yz [tm2/m]
	7.167		49.0	32.0	103.9	0.0	0.934	0.903	0.031	
1	6.956		48.7	45.0	52.0	0.0	0.743	0.712	0.031	
25	0.208		1174.0			0.0	0.000	0.000		
**	0.004		32.0			0.0	0.000		0.000	

Cross section No. 281.5 = CS 30 - in-situ conc:C3

Cross section No. 282 - VFT (253)

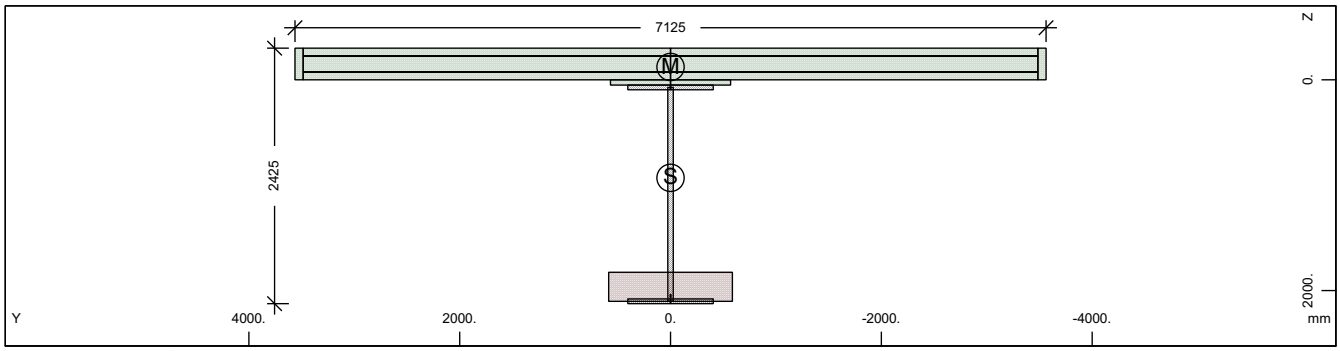

Cross section No. 282 - VFT (253)

Static properties of cross section

Mat NoR	A[cm2] It[cm4]	Ay/Az/Ayz [cm2]	Iy/Iz/Iyz [cm4]	ys/zs [mm]	y/z-sc [mm]	modules [N/mm2]	gam [kN/m]
1	2366.37	363.86	18237159.	0.0	0.0	210000	76.96
	6270.0	670.61	17272510.	930.6	-121.4	80769	

Additional static properties of cross section

Alfa-T [1/°K]	ymin ymax [mm]	zmin zmax [mm]	hymin hzmin [mm]	AK AB [cm2]	MB	Tau-T Tau-B [1/m3]	Tau-Vy Tau-Vz [1/m2]
1.2E-05	-3562.5	-1230.6		2.196E+03		7.757E+00	3.348E+01
	3562.5	1194.2		2.518E+04		1.255E+02	2.103E+01

Section values for warping

Wmin[cm2]	Wmax[cm2]	CM[cm6]	CMS[cm4]	ASwyy[cm6]	ASwzz[cm6]	ry[mm]	rz[mm]
-9005.97	9005.97	1.102E+10	2046388.2	30.80	32.52	0.0	1207.8

SOFiSTiK AG - www.sofistik.de

Composite bridge 38+50+38, b=14.25m, 2x2HL1100R HISTAR460 , slab 0.30m C30/37

Partial cross sections

Mat NoR	A[cm2] It[cm4]	Ay/Az/Ayz [cm2]	Iy/Iz/Iyz [cm4]	ys/zs [mm]	modules [N/mm2]	gam [kN/m]
1	1784.47	0.12	11132163.	0.0	210000	14.01
	14434.1	399.71	398580.9	1087.4	80769	
25	3237.30		205130.8	0.0	10667	8.09
	14872970.	9.45	0.0	1964.4	4444	
210	0.64	0.00	0.0	0.0	200000	0.00
	2.2	0.00	0.0	2052.2	76923	
31	21945.00	17358.55	170028.4	0.0	0	54.86
	6417251.4	12171.03	904880243.	-145.5	0	
300	437.69	381.93	24620.2	0.0	200000	0.00
	14.4	283.37	17717621.	-150.0	76923	

Design values of cross section

Mat NoR	A[cm2] It[cm4]	Ay/Az/Ayz [cm2]	Iy/Iz/Iyz [cm4]	ys/zs [mm]	modules [N/mm2]	gam [kN/m]
1	2328.00	363.86	17817929.	0.0	182609	76.96
	6270.0	669.98	17272508.	913.6	70234	

Design forces and moments
(C/E = characteristic plastic/elastic, D=plast.Design, F=elast. Design)

	N[kN]	Vy[kN]	Vz[kN]	Mt[kNm]	My[kNm]	Mz[kNm]	y[mm]	z[mm]	BUCK
C	81696.5	62962.66	55017.96	102578.0	76792.91	102095.3	27.9	-123.	c c
C	-82225.2				137681.2	0.00	0.0	930.6	COMB
C	-37773.5				0.00	102317.3	0.0	0.0	COMB
C	-147920.	62962.66	55017.96	102578.1	-76239.4	-101824.	-27.9	739.1	
C	6678.3				-76879.5	0.00	0.0	930.6	COMB
C	-37773.5				0.00	-102317.	0.0	0.0	COMB
E	79273.3	8622.36	13726.86	2127.23	51161.27	26021.71	0.0	930.6	
E	-79273.3	8622.36	13726.86	2127.23	-51161.3	-26021.7	0.0	930.6	
D	71040.4	47403.33	41450.56	68576.52	65513.82	76922.43	20.1	-68.6	
D	-58142.4				105349.1	0.00	0.0	930.6	COMB
D	-25182.3				0.00	77045.17	0.0	0.0	COMB
D	-115190.	47403.33	41450.56	68576.52	-63816.2	-76792.4	-20.1	673.9	
D	7777.8				-64814.6	0.00	0.0	930.6	COMB
D	-25182.3				0.00	-77045.2	0.0	0.0	COMB
F	68933.3	7497.70	11936.40	1418.15	44488.05	22627.57	0.0	930.6	
F	-68933.3	7497.70	11936.40	1418.15	-44488.1	-22627.6	0.0	930.6	

Additional Design Data

M	periphery-O/-I [m2/m]	[m2/m]	deff [mm]	t-min [mm]	t-max [mm]	SMP [o/o]	thet-p [tm2/m]	thet-y [tm2/m]	thet-z [tm2/m]	thet-yz [tm2/m]
	52.263		9.1	3.1	300.0	0.0	27.736	5.082	22.653	
1	7.299		48.9	45.0	52.0	0.0	0.905	0.874	0.031	
25	0.551		1174.0			0.0	0.005	0.005		
**	0.004		32.0			0.0	0.000		0.000	
31	16.530		265.5	50.0	300.0	0.0	22.626	0.004	22.622	
**	27.878		3.1	3.1	3.1	0.0	0.000	0.000	0.000	

SOFiSTiK AG - www.sofistik.de

Composite bridge 38+50+38, b=14.25m, 2x2HL1100R HISTAR460 , slab 0.30m C30/37

Cross section No. 282.1 = CS 1 - steel alone

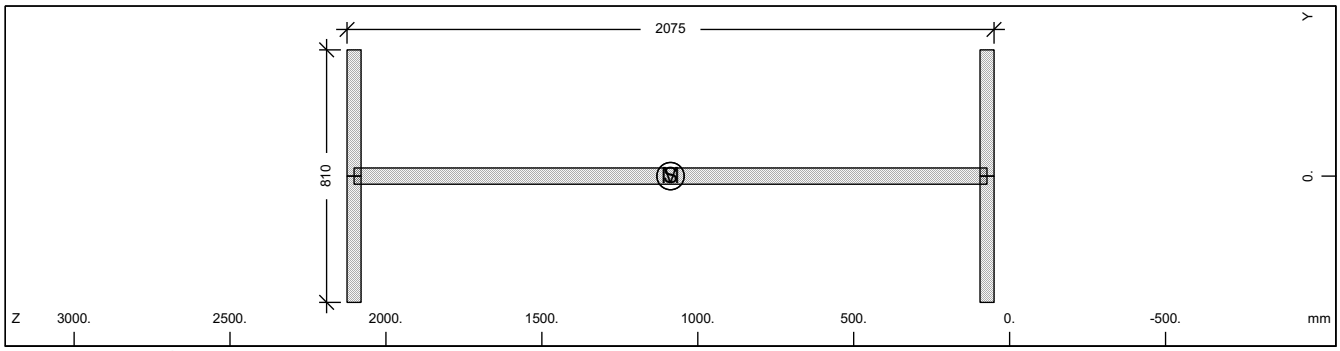

Cross section No. 282

Static properties of cross section

Mat NoR	A[cm2] It[cm4]	Ay/Az/Ayz [cm2]	Iy/Iz/Iyz [cm4]	ys/zs [mm]	modules [N/mm2]	gam [kN/m]
1	1784.47	607.50	11132163.	0.0	210000	14.01
	6270.0	999.35	398580.9	1087.4	80769	

Additional static properties of cross section

Alfa-T [1/°K]	ymin ymax [mm]	zmin zmax [mm]	hymin hzmin [mm]	AK AB [cm2]	MB	Tau-T Tau-B [1/m3]	Tau-Vy Tau-Vz [1/m2]
1.2E-05	-405.0	-1037.4		1.068E+03		3.603E+02	2.058E+01
	405.0	1037.4				1.255E+02	1.102E+01

Section values for warping

Wmin[cm2]	Wmax[cm2]	CM[cm6]	CMS[cm4]	ASwyy[cm6]	ASwzz[cm6]	ry[mm]	rz[mm]
-4110.24	4110.24	4105265734.	6257072.1	7.27	202.99	0.0	0.0

Design values of cross section

Mat NoR	A[cm2] It[cm4]	Ay/Az/Ayz [cm2]	Iy/Iz/Iyz [cm4]	ys/zs [mm]	modules [N/mm2]	gam [kN/m]
1	1784.47	607.50	11132163.	0.0	182609	14.01
	6270.0	999.35	398580.9	1087.4	70234	

Design forces and moments
(C/E = characteristic plastic/elastic, D=plast.Design, F=elast. Design)

	N[kN]	Vy[kN]	Vz[kN]	Mt[kNm]	My[kNm]	Mz[kNm]	y[mm]	z[mm]	BUCK
C	59779.7	14099.76	20414.09	848.01	42726.86	5405.01	0.0	1087.	c c
C	0.0				0.00	0.00	0.0	0.0	COMB
E	59779.7	9399.84	17556.62	536.87	35949.15	3296.90	0.0	1087.	
D	51982.4	12260.66	17751.38	737.40	37153.79	4700.01	0.0	1087.	
D	0.0				0.00	0.00	0.0	0.0	COMB
F	51982.4	8173.78	15266.63	466.84	31260.13	2866.87	0.0	1087.	

Additional Design Data

M	periphery-O/-I [m2/m] [m2/m]	deff [mm]	t-min [mm]	t-max [mm]	SMP [o/o]	thet-p [tm2/m]	thet-y [tm2/m]	thet-z [tm2/m]	thet-yz [tm2/m]
	7.299	48.9	45.0	52.0	0.0	0.905	0.874	0.031	

SOFiSTiK AG - www.sofistik.de

Composite bridge 38+50+38, b=14.25m, 2x2HL1100R HISTAR460 , slab 0.30m C30/37

Cross section No. 282.2 = CS 10 - prefab. slab C1

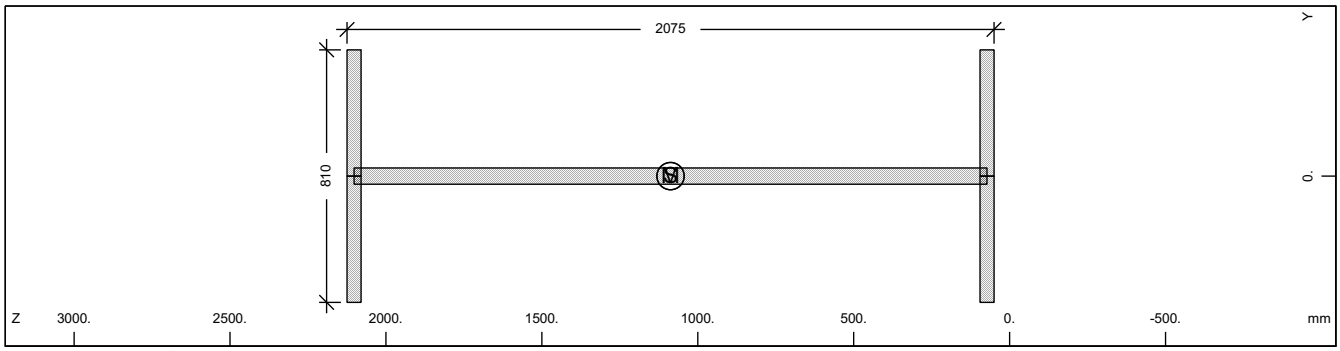

Cross section No. 282

Static properties of cross section

Mat NoR	A[cm2] It[cm4]	Ay/Az/Ayz [cm2]	Iy/Iz/Iyz [cm4]	ys/zs [mm]	modules [N/mm2]	gam [kN/m]
1	1784.47	607.50	11132163.	0.0	210000	14.01
	6270.0	999.35	398580.9	1087.4	80769	

Additional static properties of cross section

Alfa-T [1/°K]	ymin ymax [mm]	zmin zmax [mm]	hymin hzmin [mm]	AK AB [cm2]	MB	Tau-T Tau-B [1/m3]	Tau-Vy Tau-Vz [1/m2]
1.2E-05	-405.0	-1037.4		1.068E+03		3.603E+02	2.058E+01
	405.0	1037.4				1.255E+02	1.102E+01

Section values for warping

Wmin[cm2]	Wmax[cm2]	CM[cm6]	CMS[cm4]	ASwyy[cm6]	ASwzz[cm6]	ry[mm]	rz[mm]
-4110.24	4110.24	4105265734.	6257072.1	7.27	202.99	0.0	0.0

Design values of cross section

Mat NoR	A[cm2] It[cm4]	Ay/Az/Ayz [cm2]	Iy/Iz/Iyz [cm4]	ys/zs [mm]	modules [N/mm2]	gam [kN/m]
1	1784.47	607.50	11132163.	0.0	182609	14.01
	6270.0	999.35	398580.9	1087.4	70234	

Design forces and moments
(C/E = characteristic plastic/elastic, D=plast.Design, F=elast. Design)

	N[kN]	Vy[kN]	Vz[kN]	Mt[kNm]	My[kNm]	Mz[kNm]	y[mm]	z[mm]	BUCK
C	59779.7	14099.76	20414.09	848.01	42726.86	5405.01	0.0	1087.	c c
C	0.0				0.00	0.00	0.0	0.0	COMB
E	59779.7	9399.84	17556.62	536.87	35949.15	3296.90	0.0	1087.	
D	51982.4	12260.66	17751.38	737.40	37153.79	4700.01	0.0	1087.	
D	0.0				0.00	0.00	0.0	0.0	COMB
F	51982.4	8173.78	15266.63	466.84	31260.13	2866.87	0.0	1087.	

Additional Design Data

M	periphery-O/-I [m2/m] [m2/m]	deff [mm]	t-min [mm]	t-max [mm]	SMP [o/o]	thet-p [tm2/m]	thet-y [tm2/m]	thet-z [tm2/m]	thet-yz [tm2/m]
	7.299	48.9	45.0	52.0	0.0	0.905	0.874	0.031	

SOFiSTiK AG - www.sofistik.de

Composite bridge 38+50+38, b=14.25m, 2x2HL1100R HISTAR460 , slab 0.30m C30/37

Cross section No. 282.3 = CS 20 - in-situ conc:C2

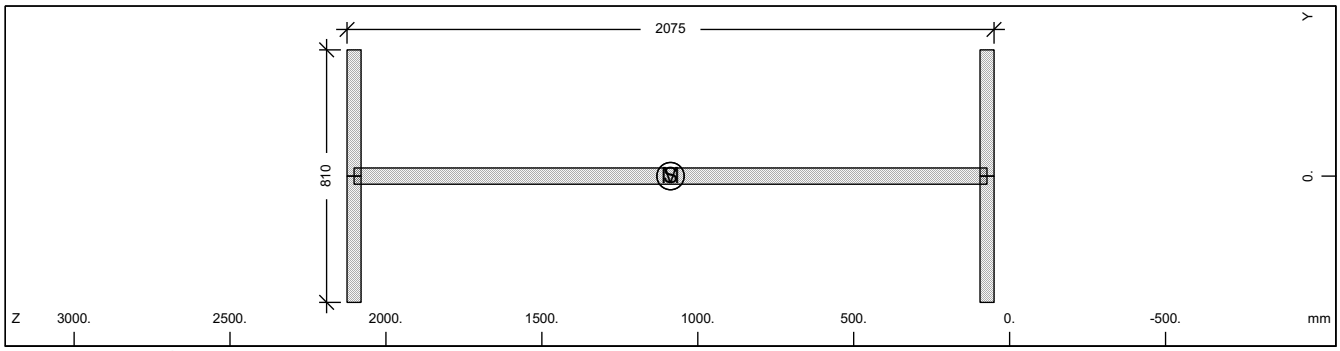

Cross section No. 282

Static properties of cross section

Mat / NoR	A[cm2] / It[cm4]	Ay/Az/Ayz [cm2]	Iy/Iz/Iyz [cm4]	ys/zs [mm]	modules [N/mm2]	gam [kN/m]
1	1784.47	607.50	11132163.	0.0	210000	14.01
	6270.0	999.35	398580.9	1087.4	80769	

Additional static properties of cross section

Alfa-T [1/°K]	ymin / ymax [mm]	zmin / zmax [mm]	hymin / hzmin [mm]	AK / AB [cm2]	MB	Tau-T / Tau-B [1/m3]	Tau-Vy / Tau-Vz [1/m2]
1.2E-05	-405.0	-1037.4		1.068E+03		3.603E+02	2.058E+01
	405.0	1037.4				1.255E+02	1.102E+01

Section values for warping

Wmin[cm2]	Wmax[cm2]	CM[cm6]	CMS[cm4]	ASwyy[cm6]	ASwzz[cm6]	ry[mm]	rz[mm]
-4110.24	4110.24	4105265734.	6257072.1	7.27	202.99	0.0	0.0

Design values of cross section

Mat / NoR	A[cm2] / It[cm4]	Ay/Az/Ayz [cm2]	Iy/Iz/Iyz [cm4]	ys/zs [mm]	modules [N/mm2]	gam [kN/m]
1	1784.47	607.50	11132163.	0.0	182609	14.01
	6270.0	999.35	398580.9	1087.4	70234	

Design forces and moments
(C/E = characteristic plastic/elastic, D=plast.Design, F=elast. Design)

	N[kN]	Vy[kN]	Vz[kN]	Mt[kNm]	My[kNm]	Mz[kNm]	y[mm]	z[mm]	BUCK
C	59779.7	14099.76	20414.09	848.01	42726.86	5405.01	0.0	1087.	c c
C	0.0				0.00	0.00	0.0	0.0	COMB
E	59779.7	9399.84	17556.62	536.87	35949.15	3296.90	0.0	1087.	
D	51982.4	12260.66	17751.38	737.40	37153.79	4700.01	0.0	1087.	
D	0.0				0.00	0.00	0.0	0.0	COMB
F	51982.4	8173.78	15266.63	466.84	31260.13	2866.87	0.0	1087.	

Additional Design Data

M	periphery-O/-I [m2/m]	[m2/m]	deff [mm]	t-min [mm]	t-max [mm]	SMP [o/o]	thet-p [tm2/m]	thet-y [tm2/m]	thet-z [tm2/m]	thet-yz [tm2/m]
	7.299		48.9	45.0	52.0	0.0	0.905	0.874	0.031	

SOFiSTiK AG - www.sofistik.de

Composite bridge 38+50+38, b=14.25m, 2x2HL1100R HISTAR460 , slab 0.30m C30/37

Cross section No. 282.4 = CS 21 - reinf active:C2

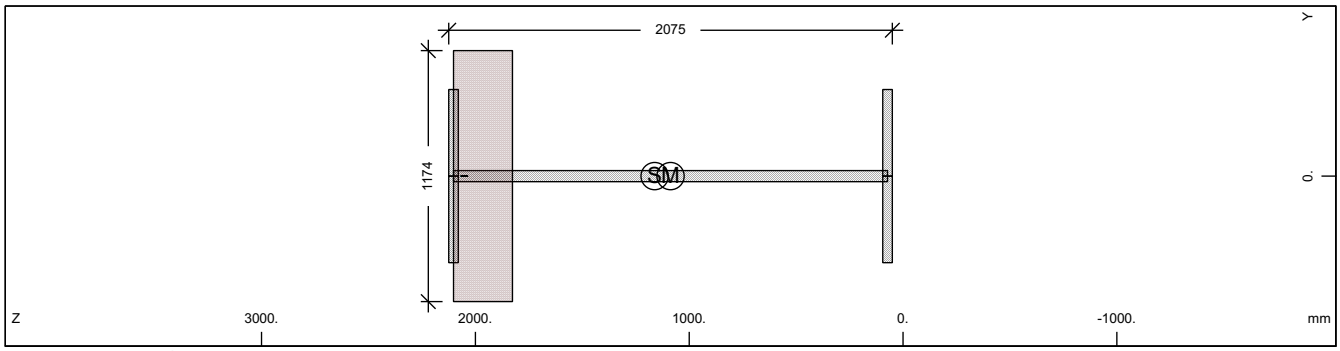

Cross section No. 282

Static properties of cross section

Mat NoR	A[cm2] It[cm4]	Ay/Az/Ayz [cm2]	Iy/Iz/Iyz [cm4]	ys/zs [mm]	modules [N/mm2]	gam [kN/m]
1	1949.52	607.50	12305445.	0.0	210000	22.10
	6270.0	979.81	398580.9	1161.6	80769	

Additional static properties of cross section

Alfa-T [1/°K]	ymin ymax [mm]	zmin zmax [mm]	hymin hzmin [mm]	AK AB [cm2]	MB	Tau-T Tau-B [1/m3]	Tau-Vy Tau-Vz [1/m2]
1.2E-05	-587.0	-1111.6		2.196E+03		7.757E+00	2.058E+01
	587.0	963.1		3.237E+03		1.255E+02	1.102E+01

Section values for warping

Wmin[cm2]	Wmax[cm2]	CM[cm6]	CMS[cm4]	ASwyy[cm6]	ASwzz[cm6]	ry[mm]	rz[mm]
-4110.24	4110.24	4105265734.	6257072.1	1.21	37.40	0.0	15.5

Partial cross sections

Mat NoR	A[cm2] It[cm4]	Ay/Az/Ayz [cm2]	Iy/Iz/Iyz [cm4]	ys/zs [mm]	modules [N/mm2]	gam [kN/m]
1	1784.47	607.50	11132163.	0.0	210000	14.01
	14434.1	978.37	398580.9	1087.4	80769	
25	3237.30		205130.8	0.0	10667	8.09
	14872970.	26.19	0.0	1964.4	4444	
210	0.64	0.00	0.0	0.0	200000	0.00
	2.2	0.00	0.0	2052.2	76923	

Design values of cross section

Mat NoR	A[cm2] It[cm4]	Ay/Az/Ayz [cm2]	Iy/Iz/Iyz [cm4]	ys/zs [mm]	modules [N/mm2]	gam [kN/m]
1	1911.15	607.50	12050820.	0.0	182609	22.10
	6270.0	979.48	398580.9	1145.5	70234	

Design forces and moments
(C/E = characteristic plastic/elastic, D=plast.Design, F=elast. Design)

	N[kN]	Vy[kN]	Vz[kN]	Mt[kNm]	My[kNm]	Mz[kNm]	y[mm]	z[mm]	BUCK
C	59811.9	14118.33	26217.51	3991.18	42757.87	6855.22	3.4	1088.	c c
C	-2555.6				42851.59	0.00	0.0	1162.	COMB
C	-4855.9				0.00	6830.49	0.0	0.0	COMB
C	-69523.8	14118.33	26217.51	3991.18	-49912.6	-6822.25	-3.4	1367.	
C	-7156.3				-50647.6	0.00	0.0	1162.	COMB
C	-4855.9				0.00	-6830.49	0.0	0.0	COMB
E	65308.8	9399.84	17544.36	2127.20	37082.95	3296.90	0.0	1162.	
E	-65308.8	9399.84	17544.36	2127.20	-37082.9	-3296.90	0.0	1162.	
D	52010.3	12276.81	21714.04	2834.41	37180.75	5661.70	2.4	1088.	
D	-2222.2				37262.25	0.00	0.0	1162.	COMB
D	-3237.3				0.00	5650.38	0.0	0.0	COMB
D	-58484.9	12276.81	21714.04	2834.41	-42161.1	-5646.19	-2.4	1302.	
D	-4252.4				-42459.6	0.00	0.0	1162.	COMB
D	-3237.3				0.00	-5650.38	0.0	0.0	COMB

SOFiSTiK AG - www.sofistik.de

Composite bridge 38+50+38, b=14.25m, 2x2HL1100R HISTAR460 , slab 0.30m C30/37

Design forces and moments
(C/E = characteristic plastic/elastic, D=plast.Design, F=elast. Design)

	N[kN]	Vy[kN]	Vz[kN]	Mt[kNm]	My[kNm]	Mz[kNm]	y[mm]	z[mm]	BUCK
F	56790.3	8173.78	15255.96	1418.13	32246.04	2866.87	0.0	1162.	
F	-56790.3	8173.78	15255.96	1418.13	-32246.0	-2866.87	0.0	1162.	

Additional Design Data

M	periphery-O/-I [m2/m]	[m2/m]	deff [mm]	t-min [mm]	t-max [mm]	SMP [o/o]	thet-p [tm2/m]	thet-y [tm2/m]	thet-z [tm2/m]	thet-yz [tm2/m]
	7.855		49.6	32.0	275.7	0.0	1.305	1.274	0.031	
1	7.299		48.9	45.0	52.0	0.0	0.905	0.874	0.031	
25	0.551		1174.0			0.0	0.005	0.005		
**	0.004		32.0			0.0	0.000		0.000	

Cross section No. 282.5 = CS 30 - in-situ conc:C3

Cross section No. 283 - VFT (253)

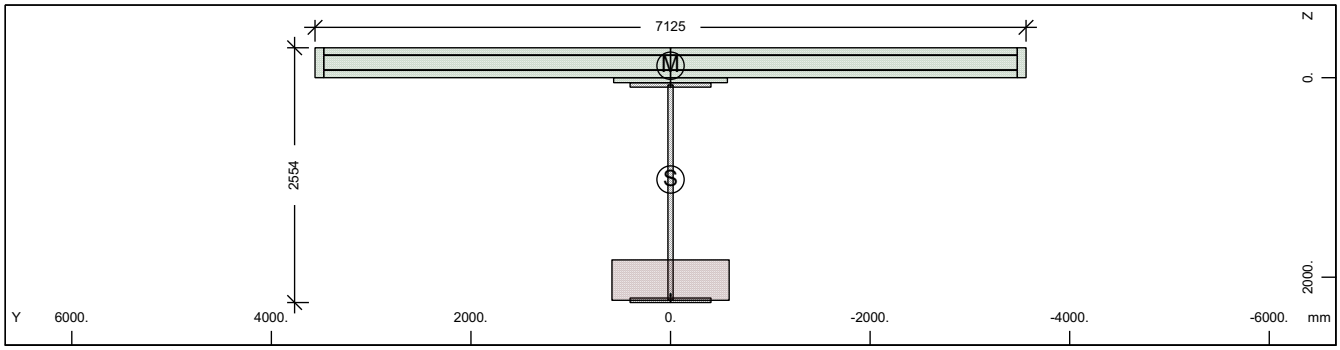

Cross section No. 283 - VFT (253)

Static properties of cross section

Mat NoR	A[cm2] It[cm4]	Ay/Az/Ayz [cm2]	Iy/Iz/Iyz [cm4]	ys/zs [mm]	y/z-sc [mm]	modules [N/mm2]	gam [kN/m]
1	2509.29	362.98	21388206.	0.0	0.0	210000	81.28
	6270.0	730.94	17130442.	1020.9	-119.7	80769	

Additional static properties of cross section

Alfa-T [1/°K]	ymin ymax [mm]	zmin zmax [mm]	hymin hzmin [mm]	AK AB [cm2]	MB	Tau-T Tau-B [1/m3]	Tau-Vy Tau-Vz [1/m2]
1.2E-05	-3562.5	-1320.9		3.208E+03		5.310E+00	3.357E+01
	3562.5	1233.0		2.670E+04		1.255E+02	1.928E+01

Section values for warping

Wmin[cm2]	Wmax[cm2]	CM[cm6]	CMS[cm4]	ASwyy[cm6]	ASwzz[cm6]	ry[mm]	rz[mm]
-9521.73	9521.73	1.218E+10	2467858.2	70.25	87.71	0.0	1410.8

Partial cross sections

Mat NoR	A[cm2] It[cm4]	Ay/Az/Ayz [cm2]	Iy/Iz/Iyz [cm4]	ys/zs [mm]	modules [N/mm2]	gam [kN/m]
1	1851.59	0.12	12853839.	0.0	210000	14.54
	15039.1	457.93	398580.9	1151.9	80769	
25	4752.77		649118.6	0.0	10667	11.88
	21835449.	23.73	0.0	2028.9	4444	
210	0.64	0.00	0.0	0.0	200000	0.00
	2.2	0.00	0.0	2181.3	76923	
31	21945.00	17562.07	170028.4	0.0	0	54.86
	6417251.4	12343.04	904880243.	-145.5	0	
300	436.46	381.01	24550.9	0.0	200000	0.00
	14.3	284.75	17568450.	-150.0	76923	

SOFiSTiK AG - www.sofistik.de

Composite bridge 38+50+38, b=14.25m, 2x2HL1100R HISTAR460 , slab 0.30m C30/37

Design values of cross section

Mat NoR	A[cm2] It[cm4]	Ay/Az/Ayz [cm2]	Iy/Iz/Iyz [cm4]	ys/zs [mm]	modules [N/mm2]	gam [kN/m]
1	2452.97	362.98	20794977.	0.0	182609	81.28
	6270.0	730.13	17130441.	997.7	70234	

Design forces and moments
(C/E = characteristic plastic/elastic, D=plast.Design, F=elast. Design)

	N[kN]	Vy[kN]	Vz[kN]	Mt[kNm]	My[kNm]	Mz[kNm]	y[mm]	z[mm]	BUCK
C	83883.6	62927.09	58816.77	104079.6	83231.52	102662.5	27.0	-74.6	c c
C	-83060.3				149331.5	0.00	0.0	1021.	COMB
C	-40046.7				0.00	102799.4	0.0	0.0	COMB
C	-153477.	62927.09	58816.78	104079.6	-86792.9	-102278.	-27.0	935.9	
C	2967.0				-86919.3	0.00	0.0	1021.	COMB
C	-40046.7				0.00	-102799.	0.0	0.0	COMB
E	84061.4	8599.78	14974.21	3107.32	58112.47	25880.51	0.0	1021.	
E	-84061.4	8599.78	14974.21	3107.32	-58112.5	-25880.5	0.0	1021.	
D	72942.2	47372.41	44246.52	69584.36	71240.51	77252.04	20.0	-54.5	
D	-58868.5				114273.8	0.00	0.0	1021.	COMB
D	-26697.8				0.00	77329.01	0.0	0.0	COMB
D	-119338.	47372.41	44246.52	69584.37	-72171.4	-77061.5	-20.0	840.4	
D	5472.9				-72665.7	0.00	0.0	1021.	COMB
D	-26697.8				0.00	-77329.0	0.0	0.0	COMB
F	73096.8	7478.07	13021.05	2071.55	50532.59	22504.79	0.0	1021.	
F	-73096.8	7478.07	13021.05	2071.55	-50532.6	-22504.8	0.0	1021.	

Additional Design Data

M	periphery-O/-I [m2/m]	[m2/m]	deff [mm]	t-min [mm]	t-max [mm]	SMP [o/o]	thet-p [tm2/m]	thet-y [tm2/m]	thet-z [tm2/m]	thet-yz [tm2/m]
	52.701		9.5	3.1	404.8	0.0	29.289	6.636	22.653	
1	7.558		49.0	45.0	52.0	0.0	1.040	1.009	0.031	
25	0.810		1174.0			0.0	0.016	0.016		
**	0.004		32.0			0.0	0.000		0.000	
31	16.530		265.5	50.0	300.0	0.0	22.626	0.004	22.622	
**	27.800		3.1	3.1	3.1	0.0	0.000	0.000	0.000	

Cross section No. 283.1 = CS 1 - steel alone

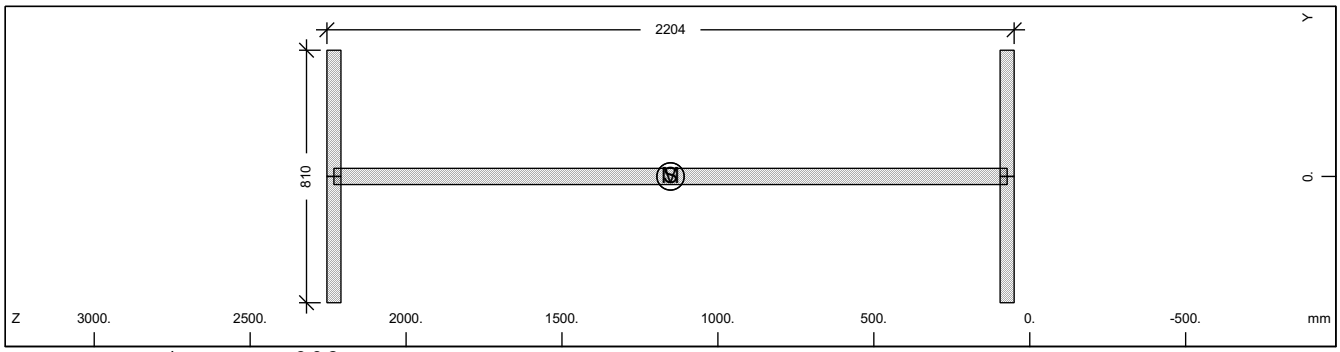

Cross section No. 283

Static properties of cross section

Mat NoR	A[cm2] It[cm4]	Ay/Az/Ayz [cm2]	Iy/Iz/Iyz [cm4]	ys/zs [mm]	modules [N/mm2]	gam [kN/m]
1	1851.59	607.50	12853839.	0.0	210000	14.54
	6270.0	1064.51	398580.9	1151.9	80769	

Additional static properties of cross section

Alfa-T [1/°K]	ymin ymax [mm]	zmin zmax [mm]	hymin hzmin [mm]	AK AB [cm2]	MB	Tau-T Tau-B [1/m3]	Tau-Vy Tau-Vz [1/m2]
1.2E-05	-405.0	-1101.9		1.112E+03		3.458E+02	2.058E+01
	405.0	1101.9				1.255E+02	1.042E+01

SOFiSTiK AG - www.sofistik.de

Composite bridge 38+50+38, b=14.25m, 2x2HL1100R HISTAR460 , slab 0.30m C30/37

Section values for warping

Wmin[cm2]	Wmax[cm2]	CM[cm6]	CMS[cm4]	ASwyy[cm6]	ASwzz[cm6]	ry[mm]	rz[mm]
-4371.64	4371.644644037243.	7078245.3		-6.74	-217.40	0.0	0.0

Design values of cross section

Mat NoR	A[cm2] It[cm4]	Ay/Az/Ayz [cm2]	Iy/Iz/Iyz [cm4]	ys/zs [mm]	modules [N/mm2]	gam [kN/m]
1	1851.59	607.50	12853839.	0.0	182609	14.54
	6270.0	1064.51	398580.9	1151.9	70234	

Design forces and moments
(C/E = characteristic plastic/elastic, D=plast.Design, F=elast. Design)

	N[kN]	Vy[kN]	Vz[kN]	Mt[kNm]	My[kNm]	Mz[kNm]	y[mm]	z[mm]	BUCK
C	62028.4	14099.76	21712.37	881.77	46657.80	5434.25	0.0	1152.	c c
C	0.0				0.00	0.00	0.0	0.0	COMB
E	62028.4	9399.84	18563.97	559.37	39077.64	3296.90	0.0	1152.	
D	53937.8	12260.66	18880.32	766.75	40572.00	4725.43	0.0	1152.	
D	0.0				0.00	0.00	0.0	0.0	COMB
F	53937.8	8173.78	16142.59	486.41	33980.56	2866.87	0.0	1152.	

Additional Design Data

M	periphery-O/-I [m2/m]	[m2/m]	deff [mm]	t-min [mm]	t-max [mm]	SMP [o/o]	thet-p [tm2/m]	thet-y [tm2/m]	thet-z [tm2/m]	thet-yz [tm2/m]
	7.558		49.0	45.0	52.0	0.0	1.040	1.009	0.031	

Cross section No. 283.2 = CS 10 - prefab. slab C1

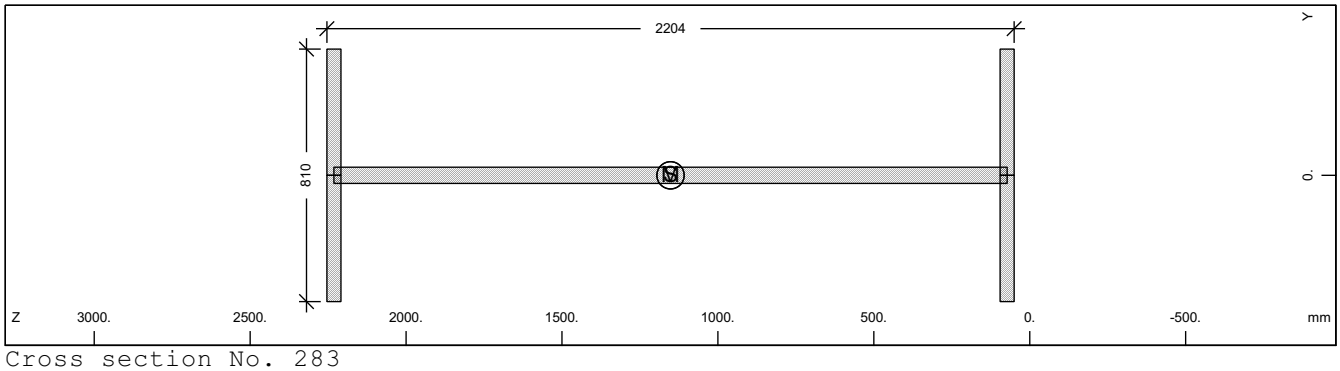

Cross section No. 283

Static properties of cross section

Mat NoR	A[cm2] It[cm4]	Ay/Az/Ayz [cm2]	Iy/Iz/Iyz [cm4]	ys/zs [mm]	modules [N/mm2]	gam [kN/m]
1	1851.59	607.50	12853839.	0.0	210000	14.54
	6270.0	1064.51	398580.9	1151.9	80769	

Additional static properties of cross section

Alfa-T [1/°K]	ymin ymax [mm]	zmin zmax [mm]	hymin hzmin [mm]	AK AB [cm2]	MB	Tau-T Tau-B [1/m3]	Tau-Vy Tau-Vz [1/m2]
1.2E-05	-405.0	-1101.9		1.112E+03		3.458E+02	2.058E+01
	405.0	1101.9				1.255E+02	1.042E+01

Section values for warping

Wmin[cm2]	Wmax[cm2]	CM[cm6]	CMS[cm4]	ASwyy[cm6]	ASwzz[cm6]	ry[mm]	rz[mm]
-4371.64	4371.644644037243.	7078245.3		-6.74	-217.40	0.0	0.0

Design values of cross section

Mat NoR	A[cm2] It[cm4]	Ay/Az/Ayz [cm2]	Iy/Iz/Iyz [cm4]	ys/zs [mm]	modules [N/mm2]	gam [kN/m]
1	1851.59	607.50	12853839.	0.0	182609	14.54
	6270.0	1064.51	398580.9	1151.9	70234	

SOFiSTiK AG - www.sofistik.de

Composite bridge 38+50+38, b=14.25m, 2x2HL1100R HISTAR460 , slab 0.30m C30/37

Design forces and moments
(C/E = characteristic plastic/elastic, D=plast.Design, F=elast. Design)

	N[kN]	Vy[kN]	Vz[kN]	Mt[kNm]	My[kNm]	Mz[kNm]	y[mm]	z[mm]	BUCK
C	62028.4	14099.76	21712.37	881.77	46657.80	5434.25	0.0	1152.	c c
C	0.0				0.00	0.00	0.0	0.0	COMB
E	62028.4	9399.84	18563.97	559.37	39077.64	3296.90	0.0	1152.	
D	53937.8	12260.66	18880.32	766.75	40572.00	4725.43	0.0	1152.	
D	0.0				0.00	0.00	0.0	0.0	COMB
F	53937.8	8173.78	16142.59	486.41	33980.56	2866.87	0.0	1152.	

Additional Design Data

M	periphery-O/-I [m2/m]	[m2/m]	deff [mm]	t-min [mm]	t-max [mm]	SMP [o/o]	thet-p [tm2/m]	thet-y [tm2/m]	thet-z [tm2/m]	thet-yz [tm2/m]
	7.558		49.0	45.0	52.0	0.0	1.040	1.009	0.031	

Cross section No. 283.3 = CS 20 - in-situ conc:C2

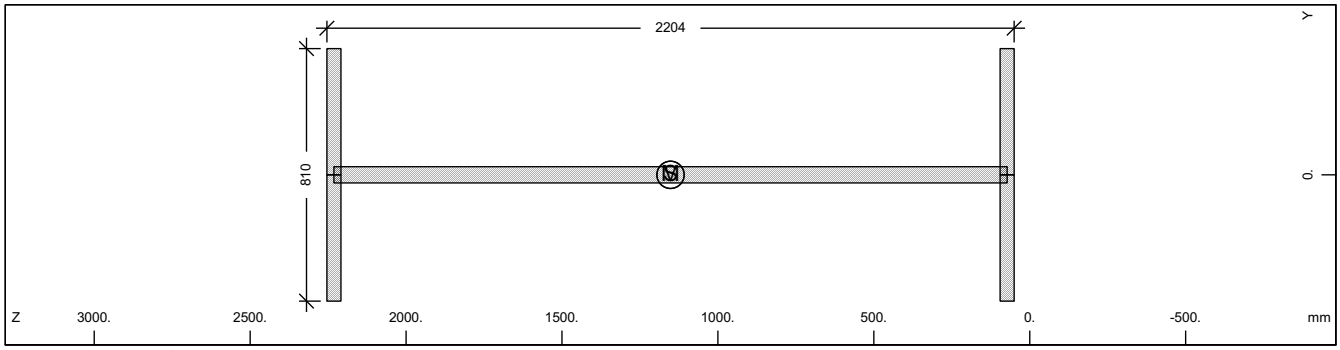

Cross section No. 283

Static properties of cross section

Mat NoR	A[cm2] It[cm4]	Ay/Az/Ayz [cm2]	Iy/Iz/Iyz [cm4]	ys/zs [mm]	modules [N/mm2]	gam [kN/m]
1	1851.59	607.50	12853839.	0.0	210000	14.54
	6270.0	1064.51	398580.9	1151.9	80769	

Additional static properties of cross section

Alfa-T [1/°K]	ymin ymax [mm]	zmin zmax [mm]	hymin hzmin [mm]	AK AB [cm2]	MB	Tau-T Tau-B [1/m3]	Tau-Vy Tau-Vz [1/m2]
1.2E-05	-405.0	-1101.9		1.112E+03		3.458E+02	2.058E+01
	405.0	1101.9				1.255E+02	1.042E+01

Section values for warping

Wmin[cm2]	Wmax[cm2]	CM[cm6]	CMS[cm4]	ASwyy[cm6]	ASwzz[cm6]	ry[mm]	rz[mm]
-4371.64	4371.644644037243.	7078245.3		-6.74	-217.40	0.0	0.0

Design values of cross section

Mat NoR	A[cm2] It[cm4]	Ay/Az/Ayz [cm2]	Iy/Iz/Iyz [cm4]	ys/zs [mm]	modules [N/mm2]	gam [kN/m]
1	1851.59	607.50	12853839.	0.0	182609	14.54
	6270.0	1064.51	398580.9	1151.9	70234	

Design forces and moments
(C/E = characteristic plastic/elastic, D=plast.Design, F=elast. Design)

	N[kN]	Vy[kN]	Vz[kN]	Mt[kNm]	My[kNm]	Mz[kNm]	y[mm]	z[mm]	BUCK
C	62028.4	14099.76	21712.37	881.77	46657.80	5434.25	0.0	1152.	c c
C	0.0				0.00	0.00	0.0	0.0	COMB
E	62028.4	9399.84	18563.97	559.37	39077.64	3296.90	0.0	1152.	
D	53937.8	12260.66	18880.32	766.75	40572.00	4725.43	0.0	1152.	
D	0.0				0.00	0.00	0.0	0.0	COMB
F	53937.8	8173.78	16142.59	486.41	33980.56	2866.87	0.0	1152.	

SOFiSTiK AG - www.sofistik.de

Composite bridge 38+50+38, b=14.25m, 2x2HL1100R HISTAR460 , slab 0.30m C30/37

Additional Design Data

M	periphery-O/-I [m2/m]	[m2/m]	deff [mm]	t-min [mm]	t-max [mm]	SMP [o/o]	thet-p [tm2/m]	thet-y [tm2/m]	thet-z [tm2/m]	thet-yz [tm2/m]
	7.558		49.0	45.0	52.0	0.0	1.040	1.009	0.031	

Cross section No. 283.4 = CS 21 - reinf active:C2

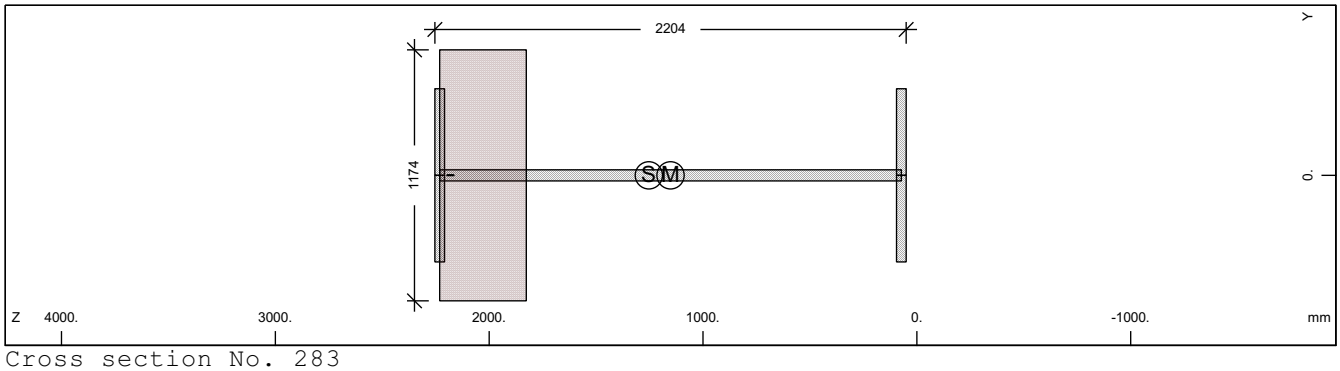

Cross section No. 283

Static properties of cross section

Mat NoR	A[cm2] It[cm4]	Ay/Az/Ayz [cm2]	Iy/Iz/Iyz [cm4]	ys/zs [mm]	modules [N/mm2]	gam [kN/m]
1	2093.62	607.50	14534684.	0.0	210000	26.42
	6270.0	1023.42	398580.9	1253.3	80769	

Additional static properties of cross section

Alfa-T [1/°K]	ymin ymax [mm]	zmin zmax [mm]	hymin hzmin [mm]	AK AB [cm2]	MB	Tau-T Tau-B [1/m3]	Tau-Vy Tau-Vz [1/m2]
1.2E-05	-587.0	-1203.3		3.208E+03		5.310E+00	2.058E+01
	587.0	1000.5		4.753E+03		1.255E+02	1.049E+01

Section values for warping

Wmin[cm2]	Wmax[cm2]	CM[cm6]	CMS[cm4]	ASwyy[cm6]	ASwzz[cm6]	ry[mm]	rz[mm]
-4371.64	4371.64	4644037243.	7078245.3	-3.62	-131.94	0.0	12.8

Partial cross sections

Mat NoR	A[cm2] It[cm4]	Ay/Az/Ayz [cm2]	Iy/Iz/Iyz [cm4]	ys/zs [mm]	modules [N/mm2]	gam [kN/m]
1	1851.59	607.50	12853839.	0.0	210000	14.54
	15039.1	1020.24	398580.9	1151.9	80769	
25	4752.77		649118.6	0.0	10667	11.88
	21835449.	57.82	0.0	2028.9	4444	
210	0.64	0.00	0.0	0.0	200000	0.00
	2.2	0.00	0.0	2181.3	76923	

Design values of cross section

Mat NoR	A[cm2] It[cm4]	Ay/Az/Ayz [cm2]	Iy/Iz/Iyz [cm4]	ys/zs [mm]	modules [N/mm2]	gam [kN/m]
1	2037.29	607.50	14178795.	0.0	182609	26.42
	6270.0	1022.68	398580.9	1231.9	70234	

Design forces and moments
(C/E = characteristic plastic/elastic, D=plast.Design, F=elast. Design)

	N[kN]	Vy[kN]	Vz[kN]	Mt[kNm]	My[kNm]	Mz[kNm]	y[mm]	z[mm]	BUCK
C	62060.6	14118.33	30016.32	5492.75	46690.89	7577.04	4.7	1153.	c c
C	-3501.5				46866.85	0.00	0.0	1253.	COMB
C	-7129.2				0.00	7526.91	0.0	0.0	COMB
C	-76318.9	14118.33	30016.32	5492.75	-49229.8	-7510.20	-4.7	1531.	
C	-10756.8				-57925.2	0.00	0.0	1253.	COMB
C	-7129.2				0.00	-7526.91	0.0	0.0	COMB
E	70136.2	9399.84	18434.95	3107.28	40463.22	3296.90	0.0	1253.	
E	-70136.2	9399.84	18434.95	3107.28	-40463.2	-3296.90	0.0	1253.	
D	53965.7	12276.81	24510.01	3842.30	40600.77	6146.26	3.6	1153.	

SOFiSTiK AG - www.sofistik.de

Composite bridge 38+50+38, b=14.25m, 2x2HL1100R HISTAR460 , slab 0.30m C30/37

Design forces and moments
(C/E = characteristic plastic/elastic, D=plast.Design, F=elast. Design)

	N[kN]	Vy[kN]	Vz[kN]	Mt[kNm]	My[kNm]	Mz[kNm]	y[mm]	z[mm]	BUCK
D	-3044.8				40753.78	0.00	0.0	1253.	COMB
D	-4752.8				0.00	6120.59	0.0	0.0	COMB
D	-63471.3	12276.81	24510.01	3842.30	-42043.9	-6112.04	-3.6	1461.	
D	-6460.7				-48126.0	0.00	0.0	1253.	COMB
D	-4752.8				0.00	-6120.59	0.0	0.0	COMB
F	60988.0	8173.78	16030.39	2071.52	35185.41	2866.87	0.0	1253.	
F	-60988.0	8173.78	16030.39	2071.52	-35185.4	-2866.87	0.0	1253.	

Additional Design Data

M	periphery-O/-I [m2/m]	[m2/m]	deff [mm]	t-min [mm]	t-max [mm]	SMP [o/o]	thet-p [tm2/m]	thet-y [tm2/m]	thet-z [tm2/m]	thet-yz [tm2/m]
	8.371		50.0	32.0	404.8	0.0	1.559	1.528	0.031	
1	7.558		49.0	45.0	52.0	0.0	1.040	1.009	0.031	
25	0.810		1174.0			0.0	0.016	0.016		
**	0.004		32.0			0.0	0.000		0.000	

Cross section No. 283.5 = CS 30 - in-situ conc:C3

Cross section No. 284 - VFT (253)

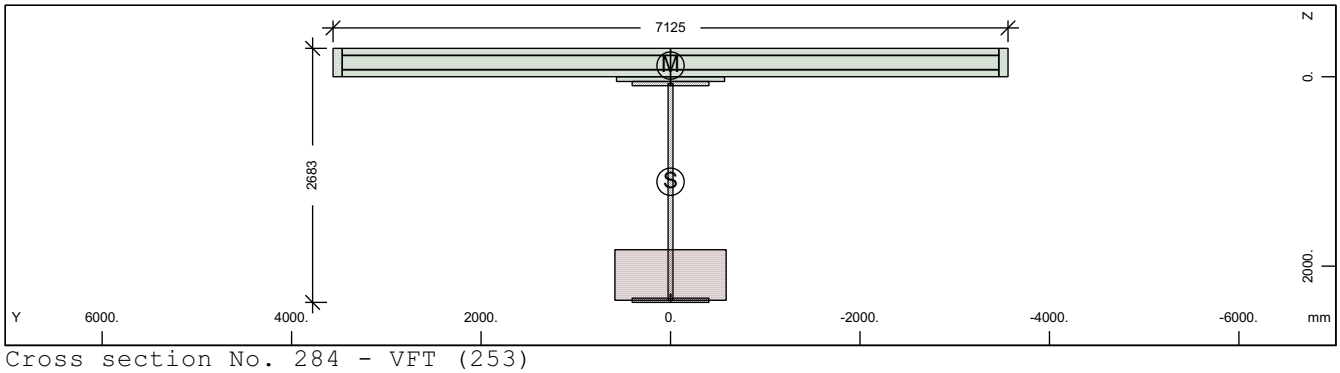

Cross section No. 284 - VFT (253)

Static properties of cross section

Mat NoR	A[cm2] It[cm4]	Ay/Az/Ayz [cm2]	Iy/Iz/Iyz [cm4]	ys/zs [mm]	y/z-sc [mm]	modules [N/mm2]	gam [kN/m]
1	2652.22	362.10	24715015.	0.0	0.0	210000	85.60
	6270.0	788.04	16989176.	1108.4	-117.9	80769	

Additional static properties of cross section

Alfa-T [1/°K]	ymin ymax [mm]	zmin zmax [mm]	hymin hzmin [mm]	AK AB [cm2]	MB	Tau-T Tau-B [1/m3]	Tau-Vy Tau-Vz [1/m2]
1.2E-05	-3562.5	-1408.4		4.220E+03		4.037E+00	3.366E+01
	3562.5	1274.5		2.821E+04		1.255E+02	1.781E+01

Section values for warping

Wmin[cm2]	Wmax[cm2]	CM[cm6]	CMS[cm4]	ASwyy[cm6]	ASwzz[cm6]	ry[mm]	rz[mm]
-10037.37	10037.37	1.342E+10	2946674.5	73.75	107.29	0.0	1598.7

Partial cross sections

Mat NoR	A[cm2] It[cm4]	Ay/Az/Ayz [cm2]	Iy/Iz/Iyz [cm4]	ys/zs [mm]	modules [N/mm2]	gam [kN/m]
1	1918.72	0.12	14729765.	0.0	210000	15.06
	15644.1	514.88	398580.9	1216.5	80769	
25	6268.24		1489081.4	0.0	10667	15.67
	28797862.	43.65	0.0	2093.5	4444	
210	0.64	0.00	0.0	0.0	200000	0.00
	2.2	0.00	0.0	2310.4	76923	
31	21945.00	17768.61	170028.4	0.0	0	54.86
	6417251.4	12411.65	904880243.	-145.5	0	

SOFiSTiK AG - www.sofistik.de

Composite bridge 38+50+38, b=14.25m, 2x2HL1100R HISTAR460 , slab 0.30m C30/37

300	435.23	380.08	24481.6	0.0	200000	0.00
	14.3	283.76	17420121.	-150.0	76923	

Design values of cross section

Mat	A[cm2]	Ay/Az/Ayz	Iy/Iz/Iyz	ys/zs	modules	gam
NoR	It[cm4]	[cm2]	[cm4]	[mm]	[N/mm2]	[kN/m]
1	2577.93	362.10	23955776.	0.0	182609	85.60
	6270.0	786.97	16989175.	1080.0	70234	

Design forces and moments
(C/E = characteristic plastic/elastic, D=plast.Design, F=elast. Design)

	N[kN]	Vy[kN]	Vz[kN]	Mt[kNm]	My[kNm]	Mz[kNm]	y[mm]	z[mm]	BUCK
C	86070.7	62891.54	62615.55	105581.1	90137.23	103223.2	26.1	-74.3	c c
C	-83800.7				160911.0	0.00	0.0	1108.	COMB
C	-42319.9				0.00	103282.1	0.0	0.0	COMB
C	-159034.	62891.54	62615.55	105581.0	-96874.1	-102732.	-26.1	1132.	
C	-839.0				-96884.2	0.00	0.0	1108.	COMB
C	-42319.9				0.00	-103282.	0.0	0.0	COMB
E	88849.4	8577.21	16212.88	4087.40	64963.68	25739.73	0.0	1108.	
E	-88849.4	8577.21	16212.88	4087.40	-64963.7	-25739.7	0.0	1108.	
D	74844.1	47341.49	47042.46	70592.20	77191.25	77582.01	20.0	-40.4	
D	-59512.3				123173.3	0.00	0.0	1108.	COMB
D	-28213.2				0.00	77613.37	0.0	0.0	COMB
D	-123486.	47341.49	47042.46	70592.19	-80331.7	-77331.1	-20.0	1007.	
D	3085.8				-80488.8	0.00	0.0	1108.	COMB
D	-28213.2				0.00	-77613.4	0.0	0.0	COMB
F	77260.4	7458.44	14098.15	2724.93	56490.15	22382.38	0.0	1108.	
F	-77260.4	7458.44	14098.15	2724.93	-56490.2	-22382.4	0.0	1108.	

Additional Design Data

M	periphery-O/-I		deff	t-min	t-max	SMP	thet-p	thet-y	thet-z	thet-yz
	[m2/m]	[m2/m]	[mm]	[mm]	[mm]	[o/o]	[tm2/m]	[tm2/m]	[tm2/m]	[tm2/m]
	53.139		10.0	3.1	533.9	0.0	30.889	8.235	22.653	
1	7.816		49.1	45.0	52.0	0.0	1.188	1.156	0.031	
25	1.068		1174.0			0.0	0.037	0.037		
**	0.004		32.0			0.0	0.000		0.000	
31	16.530		265.5	50.0	300.0	0.0	22.626	0.004	22.622	
**	27.722		3.1	3.1	3.1	0.0	0.000	0.000	0.000	

Cross section No. 284.1 = CS 1 - steel alone

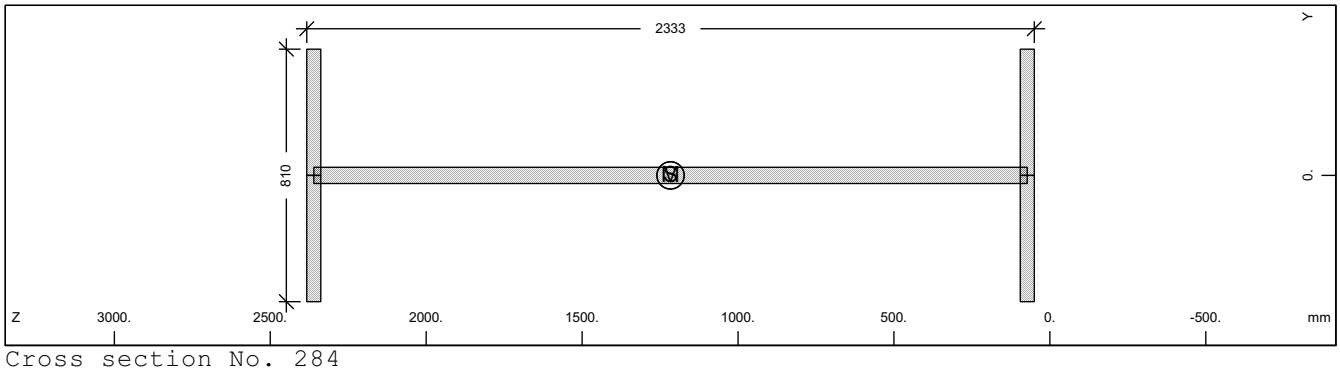

Cross section No. 284

Static properties of cross section

Mat	A[cm2]	Ay/Az/Ayz	Iy/Iz/Iyz	ys/zs	modules	gam
NoR	It[cm4]	[cm2]	[cm4]	[mm]	[N/mm2]	[kN/m]
1	1918.72	607.50	14729765.	0.0	210000	15.06
	6270.0	1129.38	398580.9	1216.5	80769	

SOFiSTiK AG - www.sofistik.de

Composite bridge 38+50+38, b=14.25m, 2x2HL1100R HISTAR460 , slab 0.30m C30/37

Additional static properties of cross section

Alfa-T	ymin ymax	zmin zmax	hymin hzmin	AK AB	MB	Tau-T Tau-B	Tau-Vy Tau-Vz
[1/°K]	[mm]	[mm]	[mm]	[cm2]		[1/m3]	[1/m2]
1.2E-05	-405.0	-1166.5		1.157E+03		3.324E+02	2.058E+01
	405.0	1166.5				1.255E+02	9.886E+00

Section values for warping

Wmin[cm2]	Wmax[cm2]	CM[cm6]	CMS[cm4]	ASwyy[cm6]	ASwzz[cm6]	ry[mm]	rz[mm]
-4633.04	4633.045216011798.	7950024.4		-6.09	-225.13	0.0	0.0

Design values of cross section

Mat NoR	A[cm2] It[cm4]	Ay/Az/Ayz [cm2]	Iy/Iz/Iyz [cm4]	ys/zs [mm]	modules [N/mm2]	gam [kN/m]
1	1918.72	607.50	14729765.	0.0	182609	15.06
	6270.0	1129.38	398580.9	1216.5	70234	

Design forces and moments
(C/E = characteristic plastic/elastic, D=plast.Design, F=elast. Design)

	N[kN]	Vy[kN]	Vz[kN]	Mt[kNm]	My[kNm]	Mz[kNm]	y[mm]	z[mm]	BUCK
C	64277.1	14099.76	23010.63	915.52	50733.85	5463.48	0.0	1216.	c c
C	0.0				0.00	0.00	0.0	0.0	COMB
E	64277.1	9399.84	19564.12	581.88	42302.94	3296.90	0.0	1216.	
D	55893.1	12260.66	20009.25	796.11	44116.39	4750.85	0.0	1216.	
D	0.0				0.00	0.00	0.0	0.0	COMB
F	55893.1	8173.78	17012.28	505.98	36785.16	2866.87	0.0	1216.	

Additional Design Data

M	periphery-O/-I [m2/m]	[m2/m]	deff [mm]	t-min [mm]	t-max [mm]	SMP [o/o]	thet-p [tm2/m]	thet-y [tm2/m]	thet-z [tm2/m]	thet-yz [tm2/m]
	7.816		49.1	45.0	52.0	0.0	1.188	1.156	0.031	

Cross section No. 284.2 = CS 10 - prefab. slab C1

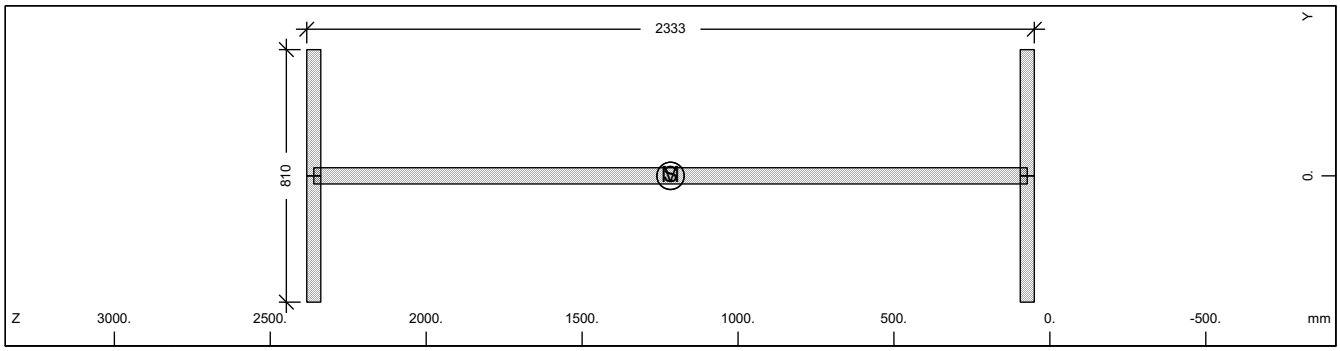

Cross section No. 284

Static properties of cross section

Mat NoR	A[cm2] It[cm4]	Ay/Az/Ayz [cm2]	Iy/Iz/Iyz [cm4]	ys/zs [mm]	modules [N/mm2]	gam [kN/m]
1	1918.72	607.50	14729765.	0.0	210000	15.06
	6270.0	1129.38	398580.9	1216.5	80769	

Additional static properties of cross section

Alfa-T	ymin ymax	zmin zmax	hymin hzmin	AK AB	MB	Tau-T Tau-B	Tau-Vy Tau-Vz
[1/°K]	[mm]	[mm]	[mm]	[cm2]		[1/m3]	[1/m2]
1.2E-05	-405.0	-1166.5		1.157E+03		3.324E+02	2.058E+01
	405.0	1166.5				1.255E+02	9.886E+00

Section values for warping

Wmin[cm2]	Wmax[cm2]	CM[cm6]	CMS[cm4]	ASwyy[cm6]	ASwzz[cm6]	ry[mm]	rz[mm]
-4633.04	4633.045216011798.	7950024.4		-6.09	-225.13	0.0	0.0

SOFiSTiK AG - www.sofistik.de

Composite bridge 38+50+38, b=14.25m, 2x2HL1100R HISTAR460 , slab 0.30m C30/37

Design values of cross section

Mat NoR	A[cm2] It[cm4]	Ay/Az/Ayz [cm2]	Iy/Iz/Iyz [cm4]	ys/zs [mm]	modules [N/mm2]	gam [kN/m]
1	1918.72	607.50	14729765.	0.0	182609	15.06
	6270.0	1129.38	398580.9	1216.5	70234	

Design forces and moments
(C/E = characteristic plastic/elastic, D=plast.Design, F=elast. Design)

	N[kN]	Vy[kN]	Vz[kN]	Mt[kNm]	My[kNm]	Mz[kNm]	y[mm]	z[mm]	BUCK
C	64277.1	14099.76	23010.63	915.52	50733.85	5463.48	0.0	1216.	c c
C	0.0				0.00	0.00	0.0	0.0	COMB
E	64277.1	9399.84	19564.12	581.88	42302.94	3296.90	0.0	1216.	
D	55893.1	12260.66	20009.25	796.11	44116.39	4750.85	0.0	1216.	
D	0.0				0.00	0.00	0.0	0.0	COMB
F	55893.1	8173.78	17012.28	505.98	36785.16	2866.87	0.0	1216.	

Additional Design Data

M	periphery-O/-I [m2/m] [m2/m]	deff [mm]	t-min [mm]	t-max [mm]	SMP [o/o]	thet-p [tm2/m]	thet-y [tm2/m]	thet-z [tm2/m]	thet-yz [tm2/m]
	7.816	49.1	45.0	52.0	0.0	1.188	1.156	0.031	

Cross section No. 284.3 = CS 20 - in-situ conc:C2

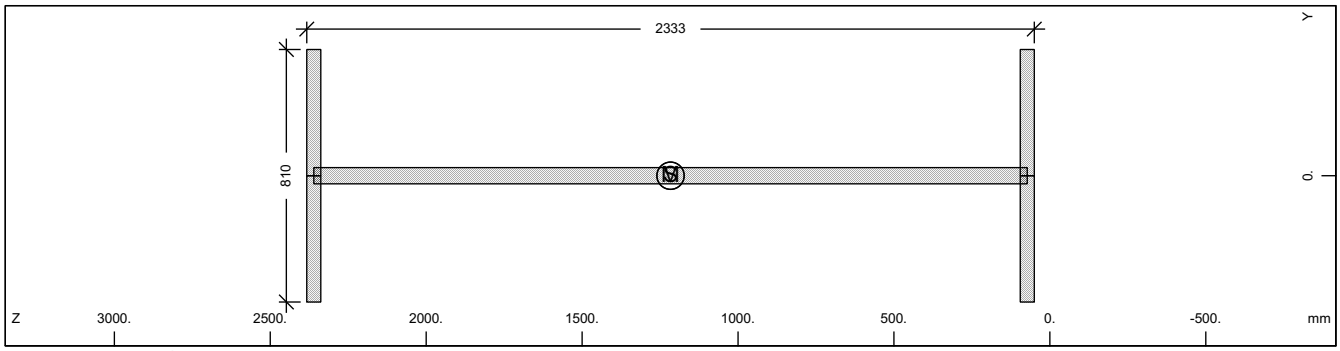

Cross section No. 284

Static properties of cross section

Mat NoR	A[cm2] It[cm4]	Ay/Az/Ayz [cm2]	Iy/Iz/Iyz [cm4]	ys/zs [mm]	modules [N/mm2]	gam [kN/m]
1	1918.72	607.50	14729765.	0.0	210000	15.06
	6270.0	1129.38	398580.9	1216.5	80769	

Additional static properties of cross section

Alfa-T [1/°K]	ymin ymax [mm]	zmin zmax [mm]	hymin hzmin [mm]	AK AB [cm2]	MB	Tau-T Tau-B [1/m3]	Tau-Vy Tau-Vz [1/m2]
1.2E-05	-405.0	-1166.5		1.157E+03		3.324E+02	2.058E+01
	405.0	1166.5				1.255E+02	9.886E+00

Section values for warping

Wmin[cm2]	Wmax[cm2]	CM[cm6]	CMS[cm4]	ASwyy[cm6]	ASwzz[cm6]	ry[mm]	rz[mm]
-4633.04	4633.045216011798.	7950024.4		-6.09	-225.13	0.0	0.0

Design values of cross section

Mat NoR	A[cm2] It[cm4]	Ay/Az/Ayz [cm2]	Iy/Iz/Iyz [cm4]	ys/zs [mm]	modules [N/mm2]	gam [kN/m]
1	1918.72	607.50	14729765.	0.0	182609	15.06
	6270.0	1129.38	398580.9	1216.5	70234	

Design forces and moments
(C/E = characteristic plastic/elastic, D=plast.Design, F=elast. Design)

	N[kN]	Vy[kN]	Vz[kN]	Mt[kNm]	My[kNm]	Mz[kNm]	y[mm]	z[mm]	BUCK
C	64277.1	14099.76	23010.63	915.52	50733.85	5463.48	0.0	1216.	c c
C	0.0				0.00	0.00	0.0	0.0	COMB
E	64277.1	9399.84	19564.12	581.88	42302.94	3296.90	0.0	1216.	

SOFiSTiK AG - www.sofistik.de

Composite bridge 38+50+38, b=14.25m, 2x2HL1100R HISTAR460 , slab 0.30m C30/37

Design forces and moments
(C/E = characteristic plastic/elastic, D=plast.Design, F=elast. Design)

	N[kN]	Vy[kN]	Vz[kN]	Mt[kNm]	My[kNm]	Mz[kNm]	y[mm]	z[mm]	BUCK
D	55893.1	12260.66	20009.25	796.11	44116.39	4750.85	0.0	1216.	
D	0.0				0.00	0.00	0.0	0.0	COMB
F	55893.1	8173.78	17012.28	505.98	36785.16	2866.87	0.0	1216.	

Additional Design Data

M	periphery-O/-I [m2/m]	[m2/m]	deff [mm]	t-min [mm]	t-max [mm]	SMP [o/o]	thet-p [tm2/m]	thet-y [tm2/m]	thet-z [tm2/m]	thet-yz [tm2/m]
	7.816		49.1	45.0	52.0	0.0	1.188	1.156	0.031	

Cross section No. 284.4 = CS 21 - reinf active:C2

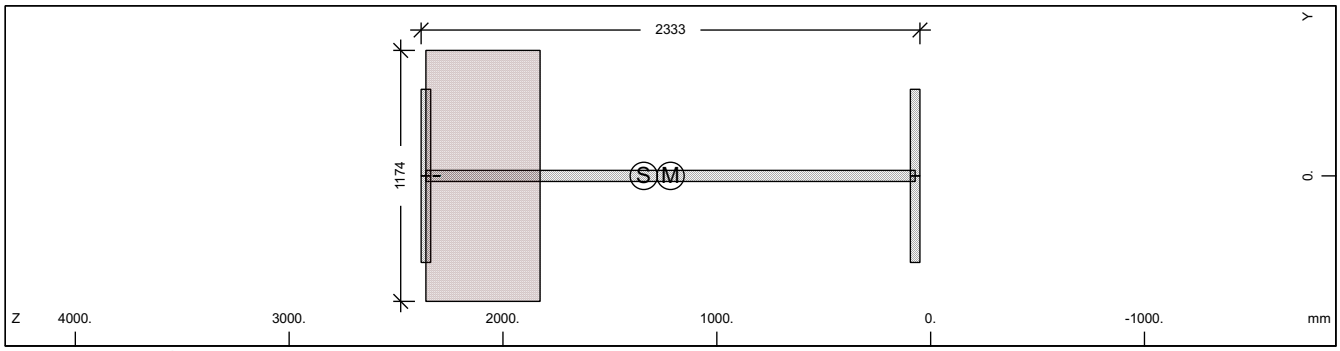

Cross section No. 284

Static properties of cross section

Mat NoR	A[cm2] It[cm4]	Ay/Az/Ayz [cm2]	Iy/Iz/Iyz [cm4]	ys/zs [mm]	modules [N/mm2]	gam [kN/m]
1	2237.72	607.50	16911440.	0.0	210000	30.73
	6270.0	1064.68	398580.9	1341.5	80769	

Additional static properties of cross section

Alfa-T [1/°K]	ymin ymax [mm]	zmin zmax [mm]	hymin hzmin [mm]	AK AB [cm2]	MB	Tau-T Tau-B [1/m3]	Tau-Vy Tau-Vz [1/m2]
1.2E-05	-587.0	-1291.5		4.220E+03		4.037E+00	2.058E+01
	587.0	1041.4		6.268E+03		1.255E+02	1.002E+01

Section values for warping

Wmin[cm2]	Wmax[cm2]	CM[cm6]	CMS[cm4]	ASwyy[cm6]	ASwzz[cm6]	ry[mm]	rz[mm]
-4633.04	4633.045216011798.		7950024.4	0.72	30.35	0.0	8.6

Partial cross sections

Mat NoR	A[cm2] It[cm4]	Ay/Az/Ayz [cm2]	Iy/Iz/Iyz [cm4]	ys/zs [mm]	modules [N/mm2]	gam [kN/m]
1	1918.72	607.50	14729765.	0.0	210000	15.06
	15644.1	1059.46	398580.9	1216.5	80769	
25	6268.24		1489081.4	0.0	10667	15.67
	28797862.	94.97	0.0	2093.5	4444	
210	0.64	0.00	0.0	0.0	200000	0.00
	2.2	0.00	0.0	2310.4	76923	

Design values of cross section

Mat NoR	A[cm2] It[cm4]	Ay/Az/Ayz [cm2]	Iy/Iz/Iyz [cm4]	ys/zs [mm]	modules [N/mm2]	gam [kN/m]
1	2163.43	607.50	16459344.	0.0	182609	30.73
	6270.0	1063.46	398580.9	1315.7	70234	

Design forces and moments
(C/E = characteristic plastic/elastic, D=plast.Design, F=elast. Design)

	N[kN]	Vy[kN]	Vz[kN]	Mt[kNm]	My[kNm]	Mz[kNm]	y[mm]	z[mm]	BUCK
C	64309.2	14118.33	33815.10	6994.31	50769.01	8305.63	5.8	1217.	c c
C	-4325.7				51037.54	0.00	0.0	1342.	COMB

SOFiSTiK AG - www.sofistik.de

Composite bridge 38+50+38, b=14.25m, 2x2HL1100R HISTAR460 , slab 0.30m C30/37

Design forces and moments
(C/E = characteristic plastic/elastic, D=plast.Design, F=elast. Design)

	N[kN]	Vy[kN]	Vz[kN]	Mt[kNm]	My[kNm]	Mz[kNm]	y[mm]	z[mm]	BUCK
C	-9402.4				0.00	8223.33	0.0	0.0	COMB
C	-83114.0	14118.33	33815.10	6994.31	-54702.8	-8195.89	-5.8	1678.	
C	-14479.1				-65177.2	0.00	0.0	1342.	COMB
C	-9402.4				0.00	-8223.33	0.0	0.0	COMB
E	74963.6	9399.84	19299.72	4087.36	43864.90	3296.90	0.0	1342.	
E	-74963.6	9399.84	19299.72	4087.36	-43864.9	-3296.90	0.0	1342.	
D	55921.1	12276.81	27305.94	4850.19	44146.96	6632.96	4.5	1217.	
D	-3761.4				44380.47	0.00	0.0	1342.	COMB
D	-6268.2				0.00	6590.80	0.0	0.0	COMB
D	-68457.6	12276.81	27305.94	4850.19	-46394.0	-6576.75	-4.5	1599.	
D	-8775.0				-53806.9	0.00	0.0	1342.	COMB
D	-6268.2				0.00	-6590.80	0.0	0.0	COMB
F	65185.7	8173.78	16782.36	2724.91	38143.39	2866.87	0.0	1342.	
F	-65185.7	8173.78	16782.36	2724.91	-38143.4	-2866.87	0.0	1342.	

Additional Design Data

M	periphery-O/-I [m2/m]	[m2/m]	deff [mm]	t-min [mm]	t-max [mm]	SMP [o/o]	thet-p [tm2/m]	thet-y [tm2/m]	thet-z [tm2/m]	thet-yz [tm2/m]
	8.888		50.4	32.0	533.9	0.0	1.816	1.784	0.031	
1	7.816		49.1	45.0	52.0	0.0	1.188	1.156	0.031	
25	1.068		1174.0			0.0	0.037	0.037		
**	0.004		32.0			0.0	0.000		0.000	

Cross section No. 284.5 = CS 30 - in-situ conc:C3

Cross section No. 285 - VFT (253)

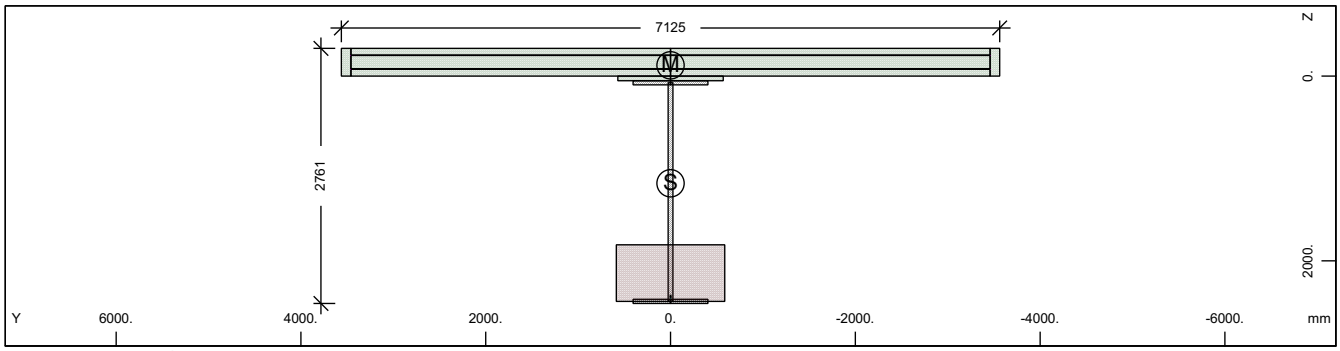

Cross section No. 285 - VFT (253)

Static properties of cross section

Mat NoR	A[cm2] It[cm4]	Ay/Az/Ayz [cm2]	Iy/Iz/Iyz [cm4]	ys/zs [mm]	y/z-sc [mm]	modules [N/mm2]	gam [kN/m]
1	2739.19	361.56	26832318.	0.0	0.0	210000	88.22
	6270.0	821.77	16903602.	1160.6	-116.9	80769	

Additional static properties of cross section

Alfa-T [1/°K]	ymin ymax [mm]	zmin zmax [mm]	hymin hzmin [mm]	AK AB [cm2]	MB	Tau-T Tau-B [1/m3]	Tau-Vy Tau-Vz [1/m2]
1.2E-05	-3562.5	-1460.6		4.836E+03		3.523E+00	3.371E+01
	3562.5	1300.9		2.914E+04		1.255E+02	1.701E+01

Section values for warping

Wmin[cm2]	Wmax[cm2]	CM[cm6]	CMS[cm4]	ASwyy[cm6]	ASwzz[cm6]	ry[mm]	rz[mm]
-10351.09	10351.09	1.420E+10	3267431.7	-95.99	-152.38	0.0	1707.8

SOFiSTiK AG - www.sofistik.de

Composite bridge 38+50+38, b=14.25m, 2x2HL1100R HISTAR460 , slab 0.30m C30/37

Partial cross sections

Mat NoR	A[cm2] It[cm4]	Ay/Az/Ayz [cm2]	Iy/Iz/Iyz [cm4]	ys/zs [mm]	modules [N/mm2]	gam [kN/m]
1	1959.57	0.12	15949161.	0.0	210000	15.38
	16012.2	549.13	398580.9	1255.7	80769	
25	7190.41		2247724.9	0.0	10667	17.98
	33034557.	57.89	0.0	2132.7	4444	
210	0.64	0.00	0.0	0.0	200000	0.00
	2.2	0.00	0.0	2389.0	76923	
31	21945.00	17895.80	170028.4	0.0	0	54.86
	6417251.4	12419.31	904880243.	-145.5	0	
300	434.48	379.51	24439.4	0.0	200000	0.00
	14.3	282.40	17330268.	-150.0	76923	

Design values of cross section

Mat NoR	A[cm2] It[cm4]	Ay/Az/Ayz [cm2]	Iy/Iz/Iyz [cm4]	ys/zs [mm]	modules [N/mm2]	gam [kN/m]
1	2653.97	361.56	25974399.	0.0	182609	88.22
	6270.0	820.52	16903600.	1129.4	70234	

Design forces and moments
(C/E = characteristic plastic/elastic, D=plast.Design, F=elast. Design)

	N[kN]	Vy[kN]	Vz[kN]	Mt[kNm]	My[kNm]	Mz[kNm]	y[mm]	z[mm]	BUCK
C	87401.5	62869.90	64927.14	106494.7	94481.12	103553.5	25.2	-74.1	c c
C	-84211.2				167935.2	0.00	0.0	1161.	COMB
C	-43703.1				0.00	103576.1	0.0	0.0	COMB
C	-162415.	62869.90	64927.14	106494.7	-102777.	-103009.	-25.2	1252.	
C	-3195.0				-102924.	0.00	0.0	1161.	COMB
C	-43703.1				0.00	-103576.	0.0	0.0	COMB
E	91763.0	8563.47	16968.75	4683.78	69096.86	25654.27	0.0	1161.	
E	-91763.0	8563.47	16968.75	4683.78	-69096.9	-25654.3	0.0	1161.	
D	76001.3	47322.67	48743.82	71205.48	80921.99	77782.98	20.0	-31.8	
D	-59869.3				128585.0	0.00	0.0	1161.	COMB
D	-29135.4				0.00	77786.66	0.0	0.0	COMB
D	-126010.	47322.67	48743.81	71205.47	-85202.0	-77495.5	-20.0	1108.	
D	1598.5				-85244.2	0.00	0.0	1161.	COMB
D	-29135.4				0.00	-77786.7	0.0	0.0	COMB
F	79793.9	7446.50	14755.44	3122.52	60084.23	22308.06	0.0	1161.	
F	-79793.9	7446.50	14755.44	3122.52	-60084.2	-22308.1	0.0	1161.	

Additional Design Data

M	periphery-O/-I [m2/m]	[m2/m]	deff [mm]	t-min [mm]	t-max [mm]	SMP [o/o]	thet-p [tm2/m]	thet-y [tm2/m]	thet-z [tm2/m]	thet-yz [tm2/m]
	53.406		10.3	3.1	612.5	0.0	31.887	9.234	22.653	
1	7.973		49.2	45.0	52.0	0.0	1.283	1.252	0.031	
25	1.225		1174.0			0.0	0.056	0.056		
**	0.004		32.0			0.0	0.000		0.000	
31	16.530		265.5	50.0	300.0	0.0	22.626	0.004	22.622	
**	27.674		3.1	3.1	3.1	0.0	0.000	0.000	0.000	

SOFiSTiK AG - www.sofistik.de

Composite bridge 38+50+38, b=14.25m, 2x2HL1100R HISTAR460 , slab 0.30m C30/37

Cross section No. 285.1 = CS 1 - steel alone

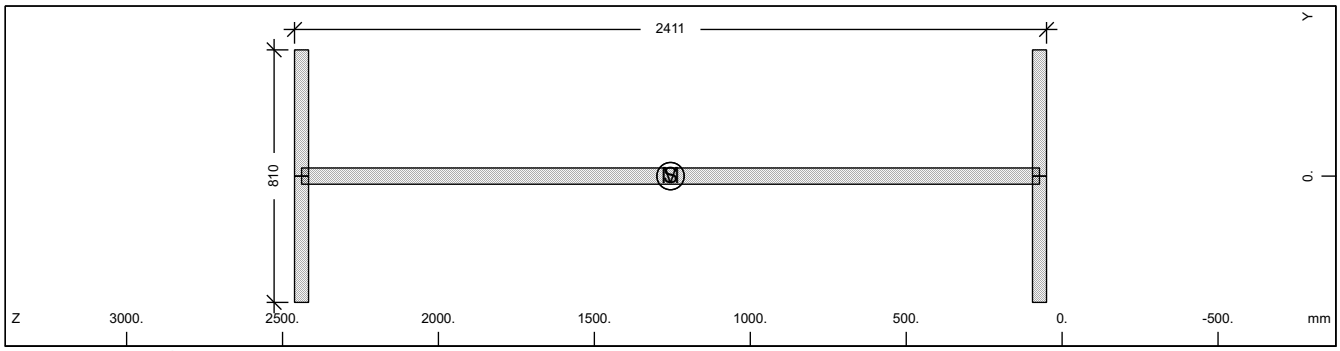

Cross section No. 285

Static properties of cross section

Mat NoR	A[cm2] It[cm4]	Ay/Az/Ayz [cm2]	Iy/Iz/Iyz [cm4]	ys/zs [mm]	modules [N/mm2]	gam [kN/m]
1	1959.57	607.50	15949161.	0.0	210000	15.38
	6270.0	1168.71	398580.9	1255.7	80769	

Additional static properties of cross section

Alfa-T [1/°K]	ymin ymax [mm]	zmin zmax [mm]	hymin hzmin [mm]	AK AB [cm2]	MB	Tau-T Tau-B [1/m3]	Tau-Vy Tau-Vz [1/m2]
1.2E-05	-405.0	-1205.7		1.184E+03		3.248E+02	2.058E+01
	405.0	1205.7				1.255E+02	9.589E+00

Section values for warping

Wmin[cm2]	Wmax[cm2]	CM[cm6]	CMS[cm4]	ASwyy[cm6]	ASwzz[cm6]	ry[mm]	rz[mm]
-4792.10	4792.105580315389.		8505280.4	-1.53	-61.20	0.0	0.0

Design values of cross section

Mat NoR	A[cm2] It[cm4]	Ay/Az/Ayz [cm2]	Iy/Iz/Iyz [cm4]	ys/zs [mm]	modules [N/mm2]	gam [kN/m]
1	1959.57	607.50	15949161.	0.0	182609	15.38
	6270.0	1168.71	398580.9	1255.7	70234	

Design forces and moments
(C/E = characteristic plastic/elastic, D=plast.Design, F=elast. Design)

	N[kN]	Vy[kN]	Vz[kN]	Mt[kNm]	My[kNm]	Mz[kNm]	y[mm]	z[mm]	BUCK
C	65645.4	14099.76	23800.64	936.06	53285.19	5481.27	0.0	1256.	c c
C	0.0				0.00	0.00	0.0	0.0	COMB
E	65645.4	9399.84	20169.44	595.57	44312.95	3296.90	0.0	1256.	
D	57083.0	12260.66	20696.21	813.97	46334.95	4766.32	0.0	1256.	
D	0.0				0.00	0.00	0.0	0.0	COMB
F	57083.0	8173.78	17538.64	517.89	38533.00	2866.87	0.0	1256.	

Additional Design Data

M	periphery-O/-I [m2/m] [m2/m]	deff [mm]	t-min [mm]	t-max [mm]	SMP [o/o]	thet-p [tm2/m]	thet-y [tm2/m]	thet-z [tm2/m]	thet-yz [tm2/m]
	7.973	49.2	45.0	52.0	0.0	1.283	1.252	0.031	

SOFiSTiK AG - www.sofistik.de

Composite bridge 38+50+38, b=14.25m, 2x2HL1100R HISTAR460 , slab 0.30m C30/37

Cross section No. 285.2 = CS 10 - prefab. slab C1

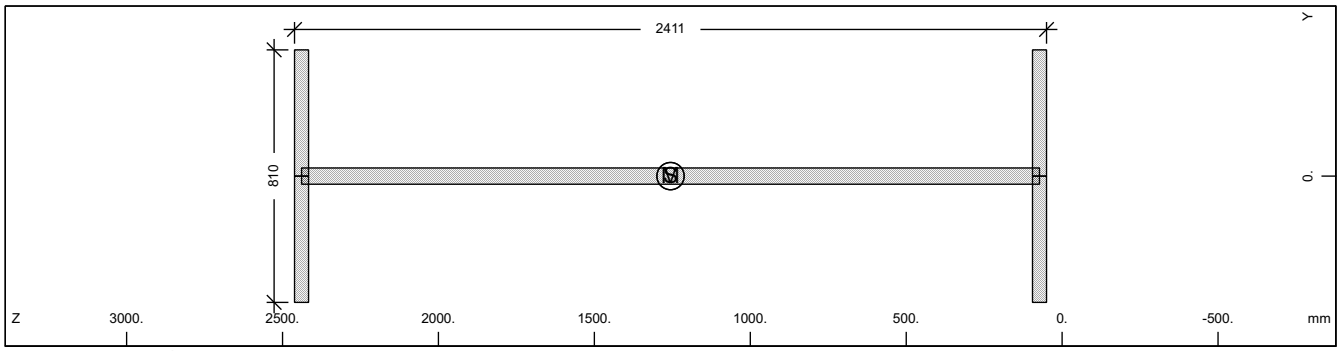

Cross section No. 285

Static properties of cross section

Mat NoR	A[cm2] It[cm4]	Ay/Az/Ayz [cm2]	Iy/Iz/Iyz [cm4]	ys/zs [mm]	modules [N/mm2]	gam [kN/m]
1	1959.57	607.50	15949161.	0.0	210000	15.38
	6270.0	1168.71	398580.9	1255.7	80769	

Additional static properties of cross section

Alfa-T [1/°K]	ymin ymax [mm]	zmin zmax [mm]	hymin hzmin [mm]	AK AB [cm2]	MB	Tau-T Tau-B [1/m3]	Tau-Vy Tau-Vz [1/m2]
1.2E-05	-405.0	-1205.7		1.184E+03		3.248E+02	2.058E+01
	405.0	1205.7				1.255E+02	9.589E+00

Section values for warping

Wmin[cm2]	Wmax[cm2]	CM[cm6]	CMS[cm4]	ASwyy[cm6]	ASwzz[cm6]	ry[mm]	rz[mm]
-4792.10	4792.105	580315389.	8505280.4	-1.53	-61.20	0.0	0.0

Design values of cross section

Mat NoR	A[cm2] It[cm4]	Ay/Az/Ayz [cm2]	Iy/Iz/Iyz [cm4]	ys/zs [mm]	modules [N/mm2]	gam [kN/m]
1	1959.57	607.50	15949161.	0.0	182609	15.38
	6270.0	1168.71	398580.9	1255.7	70234	

Design forces and moments
(C/E = characteristic plastic/elastic, D=plast.Design, F=elast. Design)

	N[kN]	Vy[kN]	Vz[kN]	Mt[kNm]	My[kNm]	Mz[kNm]	y[mm]	z[mm]	BUCK
C	65645.4	14099.76	23800.64	936.06	53285.19	5481.27	0.0	1256.	c c
C	0.0				0.00	0.00	0.0	0.0	COMB
E	65645.4	9399.84	20169.44	595.57	44312.95	3296.90	0.0	1256.	
D	57083.0	12260.66	20696.21	813.97	46334.95	4766.32	0.0	1256.	
D	0.0				0.00	0.00	0.0	0.0	COMB
F	57083.0	8173.78	17538.64	517.89	38533.00	2866.87	0.0	1256.	

Additional Design Data

M	periphery-O/-I [m2/m] [m2/m]	deff [mm]	t-min [mm]	t-max [mm]	SMP [o/o]	thet-p [tm2/m]	thet-y [tm2/m]	thet-z [tm2/m]	thet-yz [tm2/m]
	7.973	49.2	45.0	52.0	0.0	1.283	1.252	0.031	

SOFiSTiK AG - www.sofistik.de

Composite bridge 38+50+38, b=14.25m, 2x2HL1100R HISTAR460 , slab 0.30m C30/37

Cross section No. 285.3 = CS 20 - in-situ conc:C2

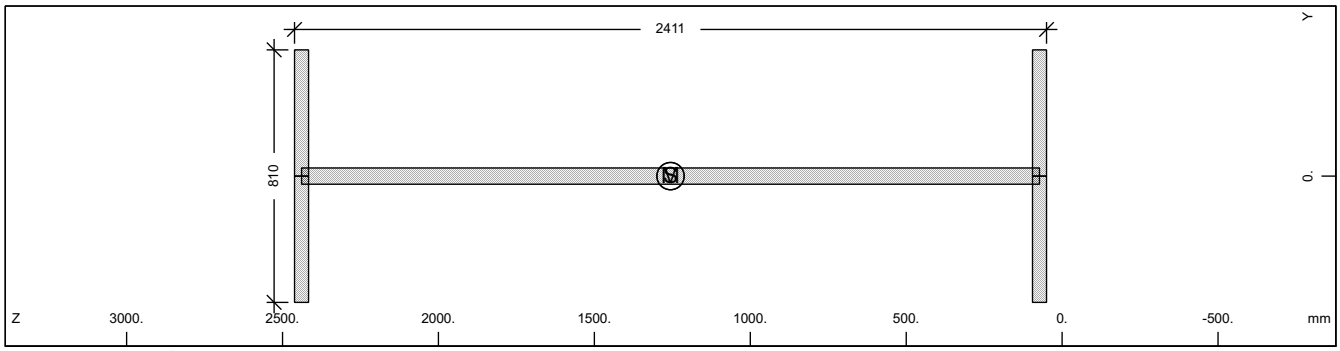

Cross section No. 285

Static properties of cross section

Mat NoR	A[cm2] It[cm4]	Ay/Az/Ayz [cm2]	Iy/Iz/Iyz [cm4]	ys/zs [mm]	modules [N/mm2]	gam [kN/m]
1	1959.57	607.50	15949161.	0.0	210000	15.38
	6270.0	1168.71	398580.9	1255.7	80769	

Additional static properties of cross section

Alfa-T [1/°K]	ymin ymax [mm]	zmin zmax [mm]	hymin hzmin [mm]	AK AB [cm2]	MB	Tau-T Tau-B [1/m3]	Tau-Vy Tau-Vz [1/m2]
1.2E-05	-405.0	-1205.7		1.184E+03		3.248E+02	2.058E+01
	405.0	1205.7				1.255E+02	9.589E+00

Section values for warping

Wmin[cm2]	Wmax[cm2]	CM[cm6]	CMS[cm4]	ASwyy[cm6]	ASwzz[cm6]	ry[mm]	rz[mm]
-4792.10	4792.105	580315389.	8505280.4	-1.53	-61.20	0.0	0.0

Design values of cross section

Mat NoR	A[cm2] It[cm4]	Ay/Az/Ayz [cm2]	Iy/Iz/Iyz [cm4]	ys/zs [mm]	modules [N/mm2]	gam [kN/m]
1	1959.57	607.50	15949161.	0.0	182609	15.38
	6270.0	1168.71	398580.9	1255.7	70234	

Design forces and moments
(C/E = characteristic plastic/elastic, D=plast.Design, F=elast. Design)

	N[kN]	Vy[kN]	Vz[kN]	Mt[kNm]	My[kNm]	Mz[kNm]	y[mm]	z[mm]	BUCK
C	65645.4	14099.76	23800.64	936.06	53285.19	5481.27	0.0	1256.	c c
C	0.0				0.00	0.00	0.0	0.0	COMB
E	65645.4	9399.84	20169.44	595.57	44312.95	3296.90	0.0	1256.	
D	57083.0	12260.66	20696.21	813.97	46334.95	4766.32	0.0	1256.	
D	0.0				0.00	0.00	0.0	0.0	COMB
F	57083.0	8173.78	17538.64	517.89	38533.00	2866.87	0.0	1256.	

Additional Design Data

M	periphery-O/-I [m2/m] [m2/m]	deff [mm]	t-min [mm]	t-max [mm]	SMP [o/o]	thet-p [tm2/m]	thet-y [tm2/m]	thet-z [tm2/m]	thet-yz [tm2/m]
	7.973	49.2	45.0	52.0	0.0	1.283	1.252	0.031	

SOFiSTiK AG - www.sofistik.de

Composite bridge 38+50+38, b=14.25m, 2x2HL1100R HISTAR460 , slab 0.30m C30/37

Cross section No. 285.4 = CS 21 - reinf active:C2

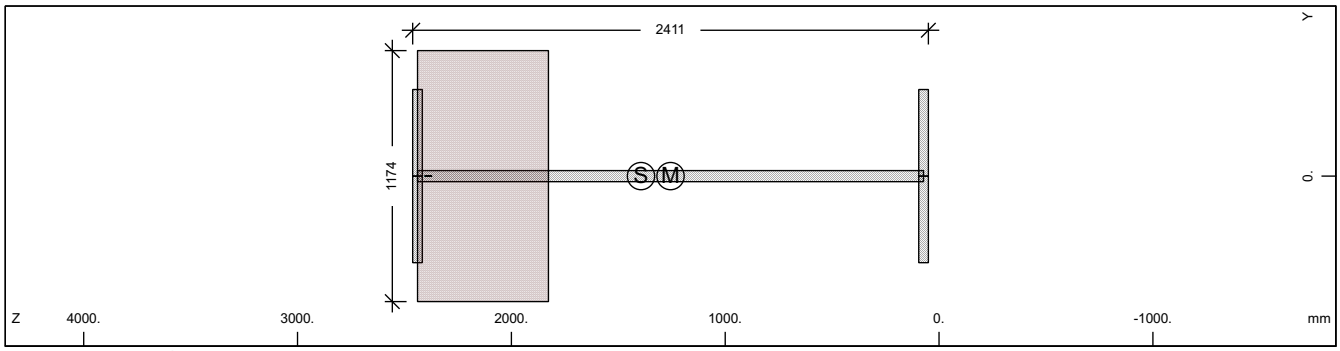

Cross section No. 285

Static properties of cross section

Mat / NoR	A[cm2] / It[cm4]	Ay/Az/Ayz [cm2]	Iy/Iz/Iyz [cm4]	ys/zs [mm]	modules [N/mm2]	gam [kN/m]
1	2325.40	607.50	18437159.	0.0	210000	33.36
	6270.0	1089.59	398580.9	1393.8	80769	

Additional static properties of cross section

Alfa-T [1/°K]	ymin / ymax [mm]	zmin / zmax [mm]	hymin / hzmin [mm]	AK / AB [cm2]	MB	Tau-T / Tau-B [1/m3]	Tau-Vy / Tau-Vz [1/m2]
1.2E-05	-587.0	-1343.8		4.836E+03		3.523E+00	2.058E+01
	587.0	1067.7		7.190E+03		1.255E+02	9.758E+00

Section values for warping

Wmin[cm2]	Wmax[cm2]	CM[cm6]	CMS[cm4]	ASwyy[cm6]	ASwzz[cm6]	ry[mm]	rz[mm]
-4792.10	4792.10	5580314923.	8505279.6	2.11	97.40	0.0	6.1

Partial cross sections

Mat / NoR	A[cm2] / It[cm4]	Ay/Az/Ayz [cm2]	Iy/Iz/Iyz [cm4]	ys/zs [mm]	modules [N/mm2]	gam [kN/m]
1	1959.57	607.50	15949161.	0.0	210000	15.38
	16012.2	1083.07	398580.9	1255.7	80769	
25	7190.41		2247724.9	0.0	10667	17.98
	33034557.	118.34	0.0	2132.7	4444	
210	0.64	0.00	0.0	0.0	200000	0.00
	2.2	0.00	0.0	2389.0	76923	

Design values of cross section

Mat / NoR	A[cm2] / It[cm4]	Ay/Az/Ayz [cm2]	Iy/Iz/Iyz [cm4]	ys/zs [mm]	modules [N/mm2]	gam [kN/m]
1	2240.18	607.50	17927465.	0.0	182609	33.36
	6270.0	1088.07	398580.9	1365.7	70234	

Design forces and moments
(C/E = characteristic plastic/elastic, D=plast.Design, F=elast. Design)

	N[kN]	Vy[kN]	Vz[kN]	Mt[kNm]	My[kNm]	Mz[kNm]	y[mm]	z[mm]	BUCK
C	65677.6	14118.33	36126.70	7908.02	53321.61	8751.83	6.5	1257.	c c
C	-4777.1				53649.13	0.00	0.0	1394.	COMB
C	-10785.6				0.00	8647.10	0.0	0.0	COMB
C	-87248.8	14118.33	36126.70	7908.02	-58195.7	-8612.19	-6.5	1762.	
C	-16794.1				-69589.4	0.00	0.0	1394.	COMB
C	-10785.6				0.00	-8647.10	0.0	0.0	COMB
E	77901.0	9399.84	19821.46	4683.75	45963.40	3296.90	0.0	1394.	
E	-77901.0	9399.84	19821.46	4683.75	-45963.4	-3296.90	0.0	1394.	
D	57110.9	12276.81	29007.30	5463.50	46366.62	6930.59	5.0	1257.	
D	-4154.0				46651.41	0.00	0.0	1394.	COMB
D	-7190.4				0.00	6876.93	0.0	0.0	COMB
D	-71491.8	12276.81	29007.30	5463.50	-49161.1	-6859.04	-5.0	1678.	
D	-10226.8				-57278.3	0.00	0.0	1394.	COMB
D	-7190.4				0.00	-6876.93	0.0	0.0	COMB

SOFiSTiK AG - www.sofistik.de

Composite bridge 38+50+38, b=14.25m, 2x2HL1100R HISTAR460 , slab 0.30m C30/37

Design forces and moments
(C/E = characteristic plastic/elastic, D=plast.Design, F=elast. Design)

	N[kN]	Vy[kN]	Vz[kN]	Mt[kNm]	My[kNm]	Mz[kNm]	y[mm]	z[mm]	BUCK
F	67740.0	8173.78	17236.05	3122.50	39968.18	2866.87	0.0	1394.	
F	-67740.0	8173.78	17236.05	3122.50	-39968.2	-2866.87	0.0	1394.	

Additional Design Data

M	periphery-O/-I [m2/m]	[m2/m]	deff [mm]	t-min [mm]	t-max [mm]	SMP [o/o]	thet-p [tm2/m]	thet-y [tm2/m]	thet-z [tm2/m]	thet-yz [tm2/m]
	9.202		50.5	32.0	612.5	0.0	1.977	1.946	0.031	
1	7.973		49.2	45.0	52.0	0.0	1.283	1.252	0.031	
25	1.225		1174.0			0.0	0.056	0.056		
**	0.004		32.0			0.0	0.000		0.000	

Cross section No. 285.5 = CS 30 - in-situ conc:C3

Cross section No. 351 - VFT

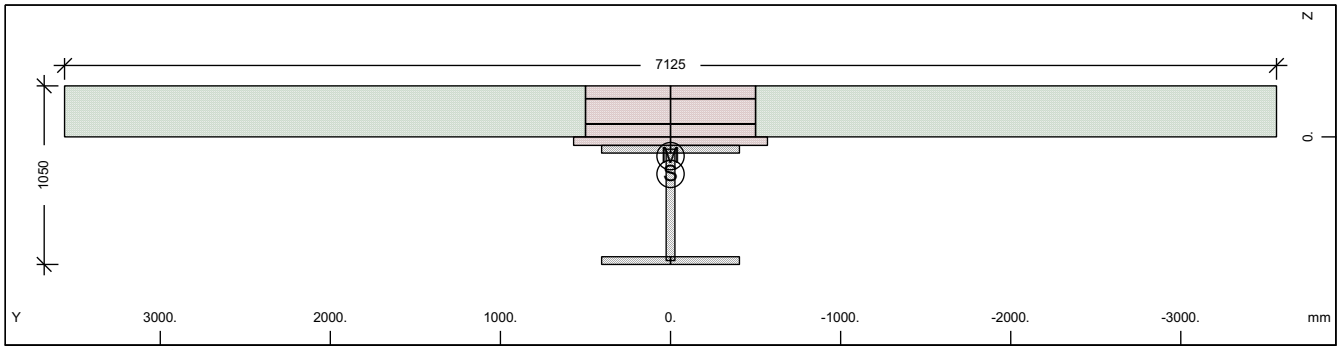

Cross section No. 351 - VFT

Static properties of cross section

Mat NoR	A[cm2] It[cm4]	Ay/Az/Ayz [cm2]	Iy/Iz/Iyz [cm4]	ys/zs [mm]	y/z-sc [mm]	modules [N/mm2]	gam [kN/m]
1	1642.18	1074.80	1946674.3	0.0	0.0	210000	63.26
	6270.0	462.67	897984.0	217.7	112.9	80769	

Additional static properties of cross section

Alfa-T [1/°K]	ymin ymax [mm]	zmin zmax [mm]	hymin hzmin [mm]	AK AB [cm2]	MB	Tau-T Tau-B [1/m3]	Tau-Vy Tau-Vz [1/m2]
1.2E-05	-3562.5	-517.7		2.115E+03		3.225E+01	1.326E+01
	3562.5	532.3		2.195E+04		1.189E+02	2.503E+01

Section values for warping

Wmin[cm2]	Wmax[cm2]	CM[cm6]	CMS[cm4]	ASwyy[cm6]	ASwzz[cm6]	ry[mm]	rz[mm]
-9367.06	9367.061042624125.		1423880.6	2.35	5.10	0.0	321.1

Partial cross sections

Mat NoR	A[cm2] It[cm4]	Ay/Az/Ayz [cm2]	Iy/Iz/Iyz [cm4]	ys/zs [mm]	modules [N/mm2]	gam [kN/m]
1	1069.60	374.63	903669.7	0.0	210000	8.40
	7990.7	428.98	398580.9	400.0	80769	
30	3570.00	4030.92	146691.2	0.0	32837	8.93
	904750.1	193.18	3117310.1	-122.1	13682	
31	18375.00	41481168.	0.0	0.0	0	45.94
	5512501.0	37388.97901762872.		-150.0	0	
300	15.07	17.99	847.8	0.0	200000	0.00
	0.0	1.01	12560.0	-150.0	76923	

SOFiSTiK AG - www.sofistik.de

Composite bridge 38+50+38, b=14.25m, 2x2HL1100R HISTAR460 , slab 0.30m C30/37

Design values of cross section

Mat NoR	A[cm2] It[cm4]	Ay/Az/Ayz [cm2]	Iy/Iz/Iyz [cm4]	ys/zs [mm]	modules [N/mm2]	gam [kN/m]
1	1511.92	915.42	1777982.7	0.0	182609	63.26
	6270.0	455.03	784247.7	247.0	70234	

Design forces and moments
(C/E = characteristic plastic/elastic, D=plast.Design, F=elast. Design)

	N[kN]	Vy[kN]	Vz[kN]	Mt[kNm]	My[kNm]	Mz[kNm]	y[mm]	z[mm]	BUCK
C	36585.2	50744.10	35388.07	99055.71	22135.36	59290.14	297.4	-132.	c d
C	-60238.3				34632.55	0.00	0.0	217.7	COMB
C	-32917.5				0.00	62637.10	0.0	0.0	COMB
C	-102420.	50744.10	35388.07	99055.72	-10272.8	-59290.1	-297.	378.2	
C	-5596.7				-10722.3	0.00	0.0	217.7	COMB
C	-32917.5				0.00	-62637.1	0.0	0.0	COMB
E	55012.9	5833.03	7727.07	523.56	7213.94	3022.57	0.0	217.7	
E	-31506.7	5833.03	7727.07	523.56	-12252.0	-3022.57	0.0	217.7	
D	31813.2	36778.50	25464.89	66149.80	18453.32	41510.95	197.9	-81.3	
D	-39023.3				25263.91	0.00	0.0	217.7	COMB
D	-21945.0				0.00	42829.79	0.0	0.0	COMB
D	-75703.2	36778.50	25464.89	66149.80	-8932.85	-41511.0	-198.	378.3	
D	-4866.7				-9323.74	0.00	0.0	217.7	COMB
D	-21945.0				0.00	-42829.8	0.0	0.0	COMB
F	47837.3	3888.69	6719.19	349.04	4809.30	2015.05	0.0	217.7	
F	-21004.4	3888.69	6719.19	349.04	-10653.9	-2015.05	0.0	217.7	

Additional Design Data

M	periphery-O/-I [m2/m]	[m2/m]	deff [mm]	t-min [mm]	t-max [mm]	SMP [o/o]	thet-p [tm2/m]	thet-y [tm2/m]	thet-z [tm2/m]	thet-yz [tm2/m]
	25.080		13.1	0.8	300.0	0.0	22.945	0.292	22.653	
1	4.550		47.0	45.0	52.0	0.0	0.102	0.071	0.031	
30	4.280		600.0	50.0	300.0	0.0	0.082	0.004	0.078	
31	12.250		300.0	300.0	300.0	0.0	22.544		22.544	
**	4.000		0.8	0.8	0.8	0.0	0.000	0.000	0.000	

Cross section No. 351.1 = CS 1 - steel alone

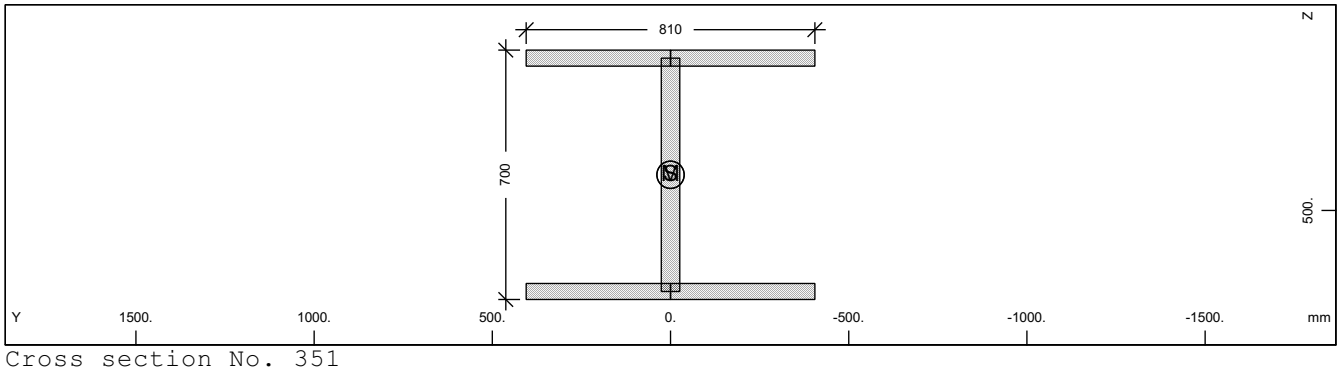

Cross section No. 351

Static properties of cross section

Mat NoR	A[cm2] It[cm4]	Ay/Az/Ayz [cm2]	Iy/Iz/Iyz [cm4]	ys/zs [mm]	modules [N/mm2]	gam [kN/m]
1	1069.60	607.50	903669.7	0.0	210000	8.40
	6270.0	288.17	398580.9	400.0	80769	

Additional static properties of cross section

Alfa-T [1/°K]	ymin ymax [mm]	zmin zmax [mm]	hymin hzmin [mm]	AK AB [cm2]	MB	Tau-T Tau-B [1/m3]	Tau-Vy Tau-Vz [1/m2]
1.2E-05	-405.0	-350.0		5.910E+02		6.508E+02	2.058E+01
	405.0	350.0				1.189E+02	3.134E+01

SOFiSTiK AG - www.sofistik.de

Composite bridge 38+50+38, b=14.25m, 2x2HL1100R HISTAR460 , slab 0.30m C30/37

Section values for warping

Wmin[cm2]	Wmax[cm2]	CM[cm6]	CMS[cm4]	ASwyy[cm6]	ASwzz[cm6]	ry[mm]	rz[mm]
-1326.38	1326.38	427502762.	651581.6	-3.01	-6.82	0.0	0.0

Design values of cross section

Mat NoR	A[cm2] It[cm4]	Ay/Az/Ayz [cm2]	Iy/Iz/Iyz [cm4]	ys/zs [mm]	modules [N/mm2]	gam [kN/m]
1	1069.60	607.50	903669.7	0.0	182609	8.40
	6270.0	288.17	398580.9	400.0	70234	

Design forces and moments
(C/E = characteristic plastic/elastic, D=plast.Design, F=elast. Design)

	N[kN]	Vy[kN]	Vz[kN]	Mt[kNm]	My[kNm]	Mz[kNm]	y[mm]	z[mm]	BUCK
C	35831.6	14099.76	6587.62	488.52	9866.45	5093.69	0.0	400.0	c d
C	0.0				0.00	0.00	0.0	0.0	COMB
E	35831.6	9399.84	6171.79	297.21	8649.41	3296.90	0.0	400.0	
D	31157.9	12260.66	5728.37	424.80	8579.52	4429.29	0.0	400.0	
D	0.0				0.00	0.00	0.0	0.0	COMB
F	31157.9	8173.78	5366.77	258.44	7521.22	2866.87	0.0	400.0	

Additional Design Data

M	periphery-O/-I [m2/m]	[m2/m]	deff [mm]	t-min [mm]	t-max [mm]	SMP [o/o]	thet-p [tm2/m]	thet-y [tm2/m]	thet-z [tm2/m]	thet-yz [tm2/m]
	4.550		47.0	45.0	52.0	0.0	0.102	0.071	0.031	

Cross section No. 351.2 = CS 10 - prefab. slab C1

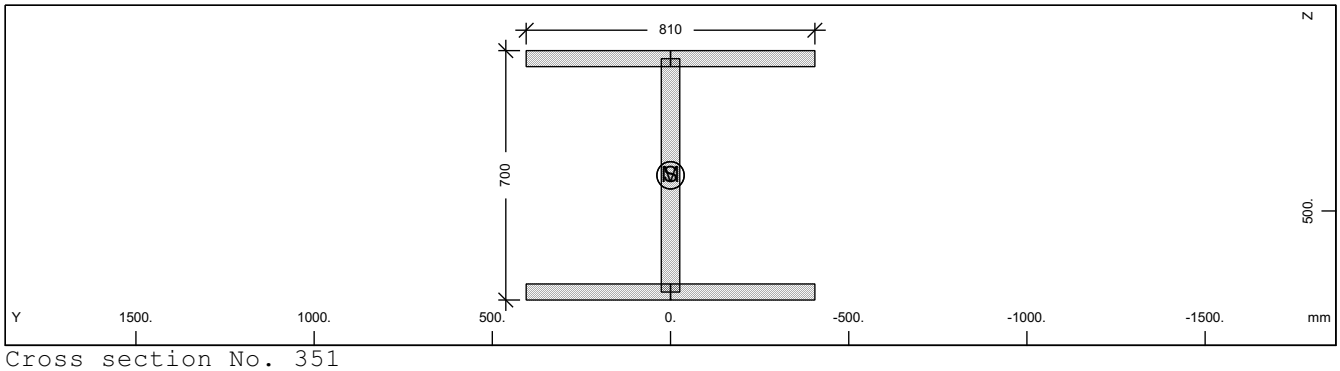

Cross section No. 351

Static properties of cross section

Mat NoR	A[cm2] It[cm4]	Ay/Az/Ayz [cm2]	Iy/Iz/Iyz [cm4]	ys/zs [mm]	modules [N/mm2]	gam [kN/m]
1	1069.60	607.50	903669.7	0.0	210000	8.40
	6270.0	288.17	398580.9	400.0	80769	

Additional static properties of cross section

Alfa-T [1/°K]	ymin ymax [mm]	zmin zmax [mm]	hymin hzmin [mm]	AK AB [cm2]	MB	Tau-T Tau-B [1/m3]	Tau-Vy Tau-Vz [1/m2]
1.2E-05	-405.0	-350.0		5.910E+02		6.508E+02	2.058E+01
	405.0	350.0				1.189E+02	3.134E+01

Section values for warping

Wmin[cm2]	Wmax[cm2]	CM[cm6]	CMS[cm4]	ASwyy[cm6]	ASwzz[cm6]	ry[mm]	rz[mm]
-1326.38	1326.38	427502762.	651581.6	-3.01	-6.82	0.0	0.0

Design values of cross section

Mat NoR	A[cm2] It[cm4]	Ay/Az/Ayz [cm2]	Iy/Iz/Iyz [cm4]	ys/zs [mm]	modules [N/mm2]	gam [kN/m]
1	1069.60	607.50	903669.7	0.0	182609	8.40
	6270.0	288.17	398580.9	400.0	70234	

SOFiSTiK AG - www.sofistik.de

Composite bridge 38+50+38, b=14.25m, 2x2HL1100R HISTAR460 , slab 0.30m C30/37

Design forces and moments
(C/E = characteristic plastic/elastic, D=plast.Design, F=elast. Design)

	N[kN]	Vy[kN]	Vz[kN]	Mt[kNm]	My[kNm]	Mz[kNm]	y[mm]	z[mm]	BUCK
C	35831.6	14099.76	6587.62	488.52	9866.45	5093.69	0.0	400.0	c d
C	0.0				0.00	0.00	0.0	0.0	COMB
E	35831.6	9399.84	6171.79	297.21	8649.41	3296.90	0.0	400.0	
D	31157.9	12260.66	5728.37	424.80	8579.52	4429.29	0.0	400.0	
D	0.0				0.00	0.00	0.0	0.0	COMB
F	31157.9	8173.78	5366.77	258.44	7521.22	2866.87	0.0	400.0	

Additional Design Data

M	periphery-O/-I [m2/m]	[m2/m]	deff [mm]	t-min [mm]	t-max [mm]	SMP [o/o]	thet-p [tm2/m]	thet-y [tm2/m]	thet-z [tm2/m]	thet-yz [tm2/m]
	4.550		47.0	45.0	52.0	0.0	0.102	0.071	0.031	

Cross section No. 351.3 = CS 20 - in-situ conc:C2

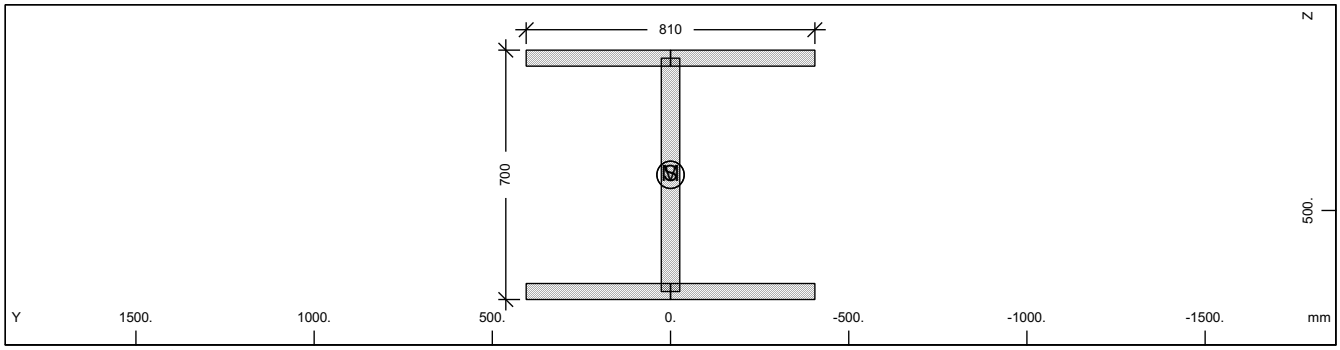

Cross section No. 351

Static properties of cross section

Mat NoR	A[cm2] It[cm4]	Ay/Az/Ayz [cm2]	Iy/Iz/Iyz [cm4]	ys/zs [mm]	modules [N/mm2]	gam [kN/m]
1	1069.60	607.50	903669.7	0.0	210000	8.40
	6270.0	288.17	398580.9	400.0	80769	

Additional static properties of cross section

Alfa-T [1/°K]	ymin ymax [mm]	zmin zmax [mm]	hymin hzmin [mm]	AK AB [cm2]	MB	Tau-T Tau-B [1/m3]	Tau-Vy Tau-Vz [1/m2]
1.2E-05	-405.0	-350.0		5.910E+02		6.508E+02	2.058E+01
	405.0	350.0				1.189E+02	3.134E+01

Section values for warping

Wmin[cm2]	Wmax[cm2]	CM[cm6]	CMS[cm4]	ASwyy[cm6]	ASwzz[cm6]	ry[mm]	rz[mm]
-1326.38	1326.38	427502762.	651581.6	-3.01	-6.82	0.0	0.0

Design values of cross section

Mat NoR	A[cm2] It[cm4]	Ay/Az/Ayz [cm2]	Iy/Iz/Iyz [cm4]	ys/zs [mm]	modules [N/mm2]	gam [kN/m]
1	1069.60	607.50	903669.7	0.0	182609	8.40
	6270.0	288.17	398580.9	400.0	70234	

Design forces and moments
(C/E = characteristic plastic/elastic, D=plast.Design, F=elast. Design)

	N[kN]	Vy[kN]	Vz[kN]	Mt[kNm]	My[kNm]	Mz[kNm]	y[mm]	z[mm]	BUCK
C	35831.6	14099.76	6587.62	488.52	9866.45	5093.69	0.0	400.0	c d
C	0.0				0.00	0.00	0.0	0.0	COMB
E	35831.6	9399.84	6171.79	297.21	8649.41	3296.90	0.0	400.0	
D	31157.9	12260.66	5728.37	424.80	8579.52	4429.29	0.0	400.0	
D	0.0				0.00	0.00	0.0	0.0	COMB
F	31157.9	8173.78	5366.77	258.44	7521.22	2866.87	0.0	400.0	

SOFiSTiK AG - www.sofistik.de

Composite bridge 38+50+38, b=14.25m, 2x2HL1100R HISTAR460 , slab 0.30m C30/37

Additional Design Data

M	periphery-O/-I [m2/m]	[m2/m]	deff [mm]	t-min [mm]	t-max [mm]	SMP [o/o]	thet-p [tm2/m]	thet-y [tm2/m]	thet-z [tm2/m]	thet-yz [tm2/m]
	4.550		47.0	45.0	52.0	0.0	0.102	0.071	0.031	

Cross section No. 351.4 = CS 21 - reinf active:C2

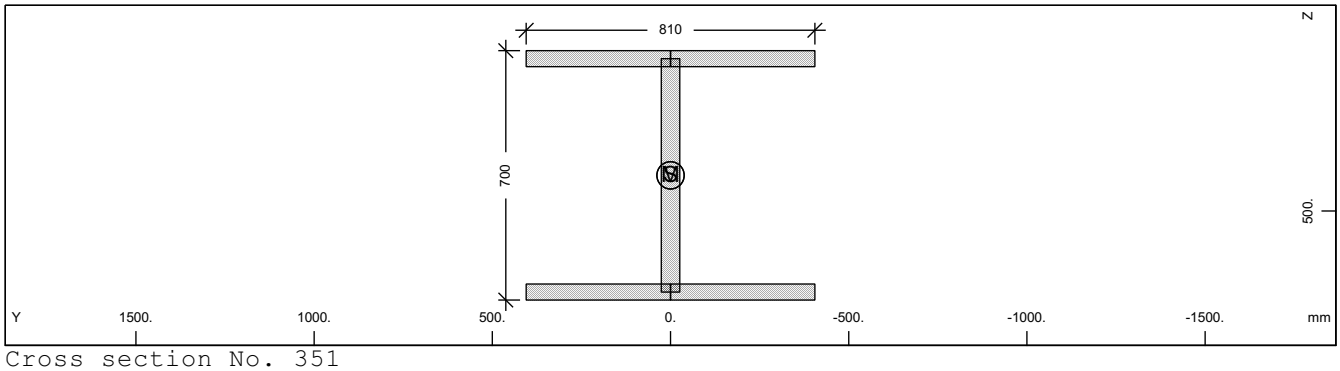

Cross section No. 351

Static properties of cross section

Mat NoR	A[cm2] It[cm4]	Ay/Az/Ayz [cm2]	Iy/Iz/Iyz [cm4]	ys/zs [mm]	modules [N/mm2]	gam [kN/m]
1	1069.60	607.50	903669.7	0.0	210000	8.40
	6270.0	288.17	398580.9	400.0	80769	

Additional static properties of cross section

Alfa-T [1/°K]	ymin ymax [mm]	zmin zmax [mm]	hymin hzmin [mm]	AK AB [cm2]	MB	Tau-T Tau-B [1/m3]	Tau-Vy Tau-Vz [1/m2]
1.2E-05	-405.0	-350.0		5.910E+02		6.508E+02	2.058E+01
	405.0	350.0				1.189E+02	3.134E+01

Section values for warping

Wmin[cm2]	Wmax[cm2]	CM[cm6]	CMS[cm4]	ASwyy[cm6]	ASwzz[cm6]	ry[mm]	rz[mm]
-1326.38	1326.38	427502762.	651581.6	-3.01	-6.82	0.0	0.0

Design values of cross section

Mat NoR	A[cm2] It[cm4]	Ay/Az/Ayz [cm2]	Iy/Iz/Iyz [cm4]	ys/zs [mm]	modules [N/mm2]	gam [kN/m]
1	1069.60	607.50	903669.7	0.0	182609	8.40
	6270.0	288.17	398580.9	400.0	70234	

Design forces and moments
(C/E = characteristic plastic/elastic, D=plast.Design, F=elast. Design)

	N[kN]	Vy[kN]	Vz[kN]	Mt[kNm]	My[kNm]	Mz[kNm]	y[mm]	z[mm]	BUCK
C	35831.6	14099.76	6587.62	488.52	9866.45	5093.69	0.0	400.0	c d
C	0.0				0.00	0.00	0.0	0.0	COMB
E	35831.6	9399.84	6171.79	297.21	8649.41	3296.90	0.0	400.0	
D	31157.9	12260.66	5728.37	424.80	8579.52	4429.29	0.0	400.0	
D	0.0				0.00	0.00	0.0	0.0	COMB
F	31157.9	8173.78	5366.77	258.44	7521.22	2866.87	0.0	400.0	

Additional Design Data

M	periphery-O/-I [m2/m]	[m2/m]	deff [mm]	t-min [mm]	t-max [mm]	SMP [o/o]	thet-p [tm2/m]	thet-y [tm2/m]	thet-z [tm2/m]	thet-yz [tm2/m]
	4.550		47.0	45.0	52.0	0.0	0.102	0.071	0.031	

SOFiSTiK AG - www.sofistik.de

Composite bridge 38+50+38, b=14.25m, 2x2HL1100R HISTAR460 , slab 0.30m C30/37

Cross section No. 351.5 = CS 30 - in-situ conc:C3

Cross section No. 352 - VFT

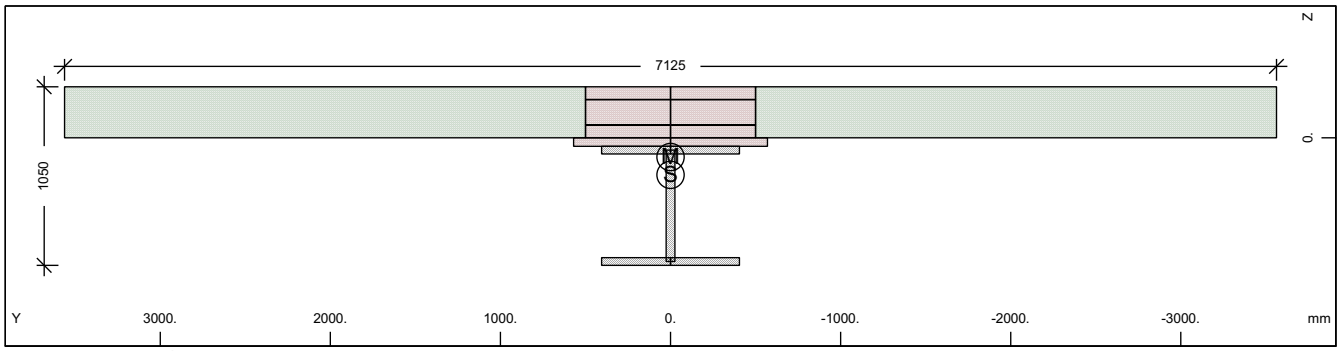

Cross section No. 352 - VFT

Static properties of cross section

Mat NoR	A[cm2] It[cm4]	Ay/Az/Ayz [cm2]	Iy/Iz/Iyz [cm4]	ys/zs [mm]	y/z-sc [mm]	modules [N/mm2]	gam [kN/m]
1	1642.18	1074.80	1946674.3	0.0	0.0	210000	63.26
	6270.0	462.67	897984.0	217.7	112.9	80769	

Additional static properties of cross section

Alfa-T [1/°K]	ymin ymax [mm]	zmin zmax [mm]	hymin hzmin [mm]	AK AB [cm2]	MB	Tau-T Tau-B [1/m3]	Tau-Vy Tau-Vz [1/m2]
1.2E-05	-3562.5	-517.7		2.115E+03		3.225E+01	1.326E+01
	3562.5	532.3		2.195E+04		1.189E+02	2.503E+01

Section values for warping

Wmin[cm2]	Wmax[cm2]	CM[cm6]	CMS[cm4]	ASwyy[cm6]	ASwzz[cm6]	ry[mm]	rz[mm]
-9367.06	9367.061	042624125.	1423880.6	2.35	5.10	0.0	321.1

Partial cross sections

Mat NoR	A[cm2] It[cm4]	Ay/Az/Ayz [cm2]	Iy/Iz/Iyz [cm4]	ys/zs [mm]	modules [N/mm2]	gam [kN/m]
1	1069.60	374.63	903669.7	0.0	210000	8.40
	7990.7	428.98	398580.9	400.0	80769	
30	3570.00	4030.92	146691.2	0.0	32837	8.93
	904750.1	193.18	3117310.1	-122.1	13682	
31	18375.00	41481168.	0.0	0.0	0	45.94
	5512501.0	37388.97901762872.		-150.0	0	
300	15.07	17.99	847.8	0.0	200000	0.00
	0.0	1.01	12560.0	-150.0	76923	

Design values of cross section

Mat NoR	A[cm2] It[cm4]	Ay/Az/Ayz [cm2]	Iy/Iz/Iyz [cm4]	ys/zs [mm]	modules [N/mm2]	gam [kN/m]
1	1511.92	915.42	1777982.7	0.0	182609	63.26
	6270.0	455.03	784247.7	247.0	70234	

Design forces and moments
(C/E = characteristic plastic/elastic, D=plast.Design, F=elast. Design)

	N[kN]	Vy[kN]	Vz[kN]	Mt[kNm]	My[kNm]	Mz[kNm]	y[mm]	z[mm]	BUCK
C	36585.2	50744.10	35388.07	99055.71	22135.36	59290.14	297.4	-132.	c c
C	-60238.3				34632.55	0.00	0.0	217.7	COMB
C	-32917.5				0.00	62637.10	0.0	0.0	COMB
C	-102420.	50744.10	35388.07	99055.72	-10272.8	-59290.1	-297.	378.2	
C	-5596.7				-10722.3	0.00	0.0	217.7	COMB
C	-32917.5				0.00	-62637.1	0.0	0.0	COMB
E	55012.9	5833.03	7727.07	523.56	7213.94	3022.57	0.0	217.7	
E	-31506.7	5833.03	7727.07	523.56	-12252.0	-3022.57	0.0	217.7	
D	31813.2	36778.50	25464.89	66149.80	18453.32	41510.95	197.9	-81.3	

SOFiSTiK AG - www.sofistik.de

Composite bridge 38+50+38, b=14.25m, 2x2HL1100R HISTAR460 , slab 0.30m C30/37

Design forces and moments
(C/E = characteristic plastic/elastic, D=plast.Design, F=elast. Design)

	N[kN]	Vy[kN]	Vz[kN]	Mt[kNm]	My[kNm]	Mz[kNm]	y[mm]	z[mm]	BUCK
D	-39023.3				25263.91	0.00	0.0	217.7	COMB
D	-21945.0				0.00	42829.79	0.0	0.0	COMB
D	-75703.2	36778.50	25464.89	66149.80	-8932.85	-41511.0	-198.	378.3	
D	-4866.7				-9323.74	0.00	0.0	217.7	COMB
D	-21945.0				0.00	-42829.8	0.0	0.0	COMB
F	47837.3	3888.69	6719.19	349.04	4809.30	2015.05	0.0	217.7	
F	-21004.4	3888.69	6719.19	349.04	-10653.9	-2015.05	0.0	217.7	

Additional Design Data

M	periphery-O/-I [m2/m]	[m2/m]	deff [mm]	t-min [mm]	t-max [mm]	SMP [o/o]	thet-p [tm2/m]	thet-y [tm2/m]	thet-z [tm2/m]	thet-yz [tm2/m]
	25.080		13.1	0.8	300.0	0.0	22.945	0.292	22.653	
1	4.550		47.0	45.0	52.0	0.0	0.102	0.071	0.031	
30	4.280		600.0	50.0	300.0	0.0	0.082	0.004	0.078	
31	12.250		300.0	300.0	300.0	0.0	22.544		22.544	
**	4.000		0.8	0.8	0.8	0.0	0.000	0.000	0.000	

Cross section No. 352.1 = CS 1 - steel alone

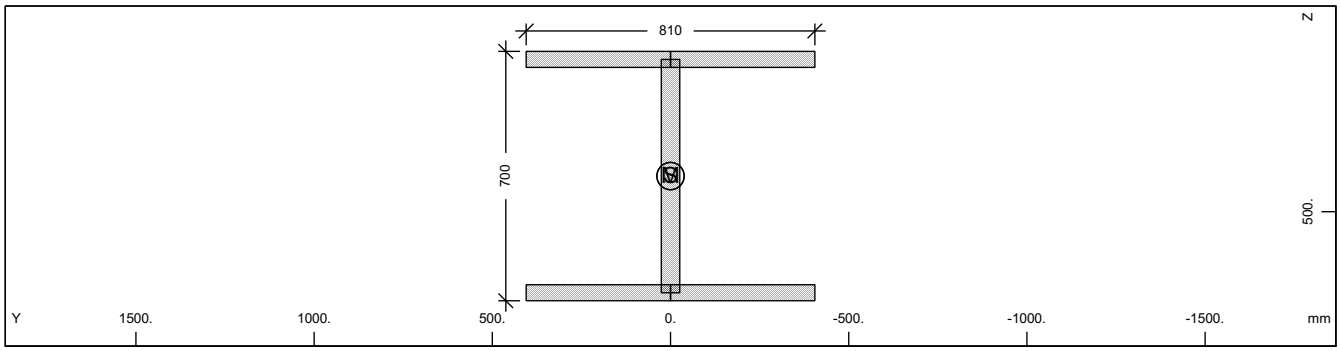

Cross section No. 352

Static properties of cross section

Mat NoR	A[cm2] It[cm4]	Ay/Az/Ayz [cm2]	Iy/Iz/Iyz [cm4]	ys/zs [mm]	modules [N/mm2]	gam [kN/m]
1	1069.60	607.50	903669.7	0.0	210000	8.40
	6270.0	288.17	398580.9	400.0	80769	

Additional static properties of cross section

Alfa-T [1/°K]	ymin ymax [mm]	zmin zmax [mm]	hymin hzmin [mm]	AK AB [cm2]	MB	Tau-T Tau-B [1/m3]	Tau-Vy Tau-Vz [1/m2]
1.2E-05	-405.0	-350.0		5.910E+02		6.508E+02	2.058E+01
	405.0	350.0				1.189E+02	3.134E+01

Section values for warping

Wmin[cm2]	Wmax[cm2]	CM[cm6]	CMS[cm4]	ASwyy[cm6]	ASwzz[cm6]	ry[mm]	rz[mm]
-1326.38	1326.38	427502762.	651581.6	-3.01	-6.82	0.0	0.0

Design values of cross section

Mat NoR	A[cm2] It[cm4]	Ay/Az/Ayz [cm2]	Iy/Iz/Iyz [cm4]	ys/zs [mm]	modules [N/mm2]	gam [kN/m]
1	1069.60	607.50	903669.7	0.0	182609	8.40
	6270.0	288.17	398580.9	400.0	70234	

Design forces and moments
(C/E = characteristic plastic/elastic, D=plast.Design, F=elast. Design)

	N[kN]	Vy[kN]	Vz[kN]	Mt[kNm]	My[kNm]	Mz[kNm]	y[mm]	z[mm]	BUCK
C	35831.6	14099.76	6587.62	488.52	9866.45	5093.69	0.0	400.0	c d
C	0.0				0.00	0.00	0.0	0.0	COMB
E	35831.6	9399.84	6171.79	297.21	8649.41	3296.90	0.0	400.0	
D	31157.9	12260.66	5728.37	424.80	8579.52	4429.29	0.0	400.0	

SOFiSTiK AG - www.sofistik.de

Composite bridge 38+50+38, b=14.25m, 2x2HL1100R HISTAR460 , slab 0.30m C30/37

Design forces and moments
(C/E = characteristic plastic/elastic, D=plast.Design, F=elast. Design)

	N[kN]	Vy[kN]	Vz[kN]	Mt[kNm]	My[kNm]	Mz[kNm]	y[mm]	z[mm]	BUCK
D	0.0				0.00	0.00	0.0	0.0	COMB
F	31157.9	8173.78	5366.77	258.44	7521.22	2866.87	0.0	400.0	

Additional Design Data

M	periphery-O/-I [m2/m]	[m2/m]	deff [mm]	t-min [mm]	t-max [mm]	SMP [o/o]	thet-p [tm2/m]	thet-y [tm2/m]	thet-z [tm2/m]	thet-yz [tm2/m]
	4.550		47.0	45.0	52.0	0.0	0.102	0.071	0.031	

Cross section No. 352.2 = CS 10 - prefab. slab C1

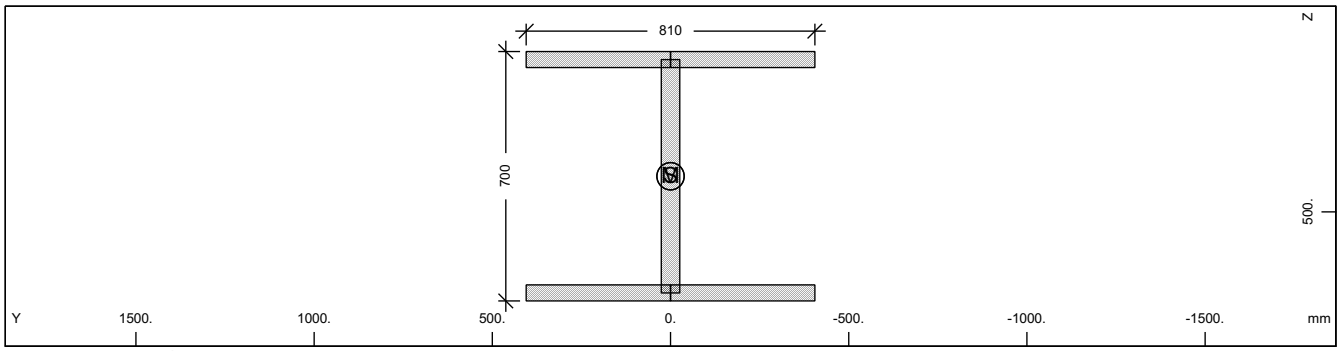

Cross section No. 352

Static properties of cross section

Mat NoR	A[cm2] It[cm4]	Ay/Az/Ayz [cm2]	Iy/Iz/Iyz [cm4]	ys/zs [mm]	modules [N/mm2]	gam [kN/m]
1	1069.60	607.50	903669.7	0.0	210000	8.40
	6270.0	288.17	398580.9	400.0	80769	

Additional static properties of cross section

Alfa-T [1/°K]	ymin ymax [mm]	zmin zmax [mm]	hymin hzmin [mm]	AK AB [cm2]	MB	Tau-T Tau-B [1/m3]	Tau-Vy Tau-Vz [1/m2]
1.2E-05	-405.0	-350.0		5.910E+02		6.508E+02	2.058E+01
	405.0	350.0				1.189E+02	3.134E+01

Section values for warping

Wmin[cm2]	Wmax[cm2]	CM[cm6]	CMS[cm4]	ASwyy[cm6]	ASwzz[cm6]	ry[mm]	rz[mm]
-1326.38	1326.38	427502762.	651581.6	-3.01	-6.82	0.0	0.0

Design values of cross section

Mat NoR	A[cm2] It[cm4]	Ay/Az/Ayz [cm2]	Iy/Iz/Iyz [cm4]	ys/zs [mm]	modules [N/mm2]	gam [kN/m]
1	1069.60	607.50	903669.7	0.0	182609	8.40
	6270.0	288.17	398580.9	400.0	70234	

Design forces and moments
(C/E = characteristic plastic/elastic, D=plast.Design, F=elast. Design)

	N[kN]	Vy[kN]	Vz[kN]	Mt[kNm]	My[kNm]	Mz[kNm]	y[mm]	z[mm]	BUCK
C	35831.6	14099.76	6587.62	488.52	9866.45	5093.69	0.0	400.0	c d
C	0.0				0.00	0.00	0.0	0.0	COMB
E	35831.6	9399.84	6171.79	297.21	8649.41	3296.90	0.0	400.0	
D	31157.9	12260.66	5728.37	424.80	8579.52	4429.29	0.0	400.0	
D	0.0				0.00	0.00	0.0	0.0	COMB
F	31157.9	8173.78	5366.77	258.44	7521.22	2866.87	0.0	400.0	

Additional Design Data

M	periphery-O/-I [m2/m]	[m2/m]	deff [mm]	t-min [mm]	t-max [mm]	SMP [o/o]	thet-p [tm2/m]	thet-y [tm2/m]	thet-z [tm2/m]	thet-yz [tm2/m]
	4.550		47.0	45.0	52.0	0.0	0.102	0.071	0.031	

SOFiSTiK AG - www.sofistik.de

Composite bridge 38+50+38, b=14.25m, 2x2HL1100R HISTAR460 , slab 0.30m C30/37

Cross section No. 352.3 = CS 20 - in-situ conc:C2

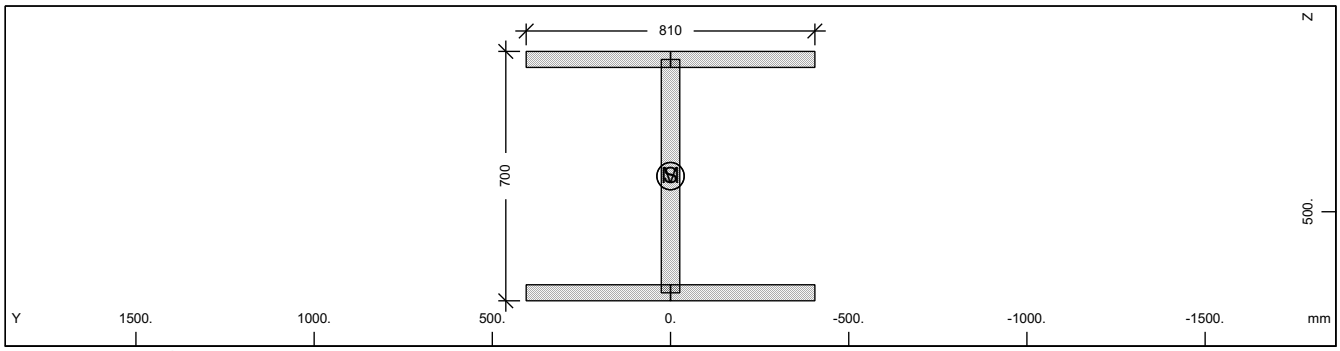

Cross section No. 352

Static properties of cross section

Mat NoR	A[cm2] It[cm4]	Ay/Az/Ayz [cm2]	Iy/Iz/Iyz [cm4]	ys/zs [mm]	modules [N/mm2]	gam [kN/m]
1	1069.60	607.50	903669.7	0.0	210000	8.40
	6270.0	288.17	398580.9	400.0	80769	

Additional static properties of cross section

Alfa-T [1/°K]	ymin ymax [mm]	zmin zmax [mm]	hymin hzmin [mm]	AK AB [cm2]	MB	Tau-T Tau-B [1/m3]	Tau-Vy Tau-Vz [1/m2]
1.2E-05	-405.0	-350.0		5.910E+02		6.508E+02	2.058E+01
	405.0	350.0				1.189E+02	3.134E+01

Section values for warping

Wmin[cm2]	Wmax[cm2]	CM[cm6]	CMS[cm4]	ASwyy[cm6]	ASwzz[cm6]	ry[mm]	rz[mm]
-1326.38	1326.38	427502762.	651581.6	-3.01	-6.82	0.0	0.0

Design values of cross section

Mat NoR	A[cm2] It[cm4]	Ay/Az/Ayz [cm2]	Iy/Iz/Iyz [cm4]	ys/zs [mm]	modules [N/mm2]	gam [kN/m]
1	1069.60	607.50	903669.7	0.0	182609	8.40
	6270.0	288.17	398580.9	400.0	70234	

Design forces and moments
(C/E = characteristic plastic/elastic, D=plast.Design, F=elast. Design)

	N[kN]	Vy[kN]	Vz[kN]	Mt[kNm]	My[kNm]	Mz[kNm]	y[mm]	z[mm]	BUCK
C	35831.6	14099.76	6587.62	488.52	9866.45	5093.69	0.0	400.0	c d
C	0.0				0.00	0.00	0.0	0.0	COMB
E	35831.6	9399.84	6171.79	297.21	8649.41	3296.90	0.0	400.0	
D	31157.9	12260.66	5728.37	424.80	8579.52	4429.29	0.0	400.0	
D	0.0				0.00	0.00	0.0	0.0	COMB
F	31157.9	8173.78	5366.77	258.44	7521.22	2866.87	0.0	400.0	

Additional Design Data

M	periphery-O/-I [m2/m] [m2/m]	deff [mm]	t-min [mm]	t-max [mm]	SMP [o/o]	thet-p [tm2/m]	thet-y [tm2/m]	thet-z [tm2/m]	thet-yz [tm2/m]
	4.550	47.0	45.0	52.0	0.0	0.102	0.071	0.031	

SOFiSTiK AG - www.sofistik.de

Composite bridge 38+50+38, b=14.25m, 2x2HL1100R HISTAR460 , slab 0.30m C30/37

Cross section No. 352.4 = CS 21 - reinf active:C2

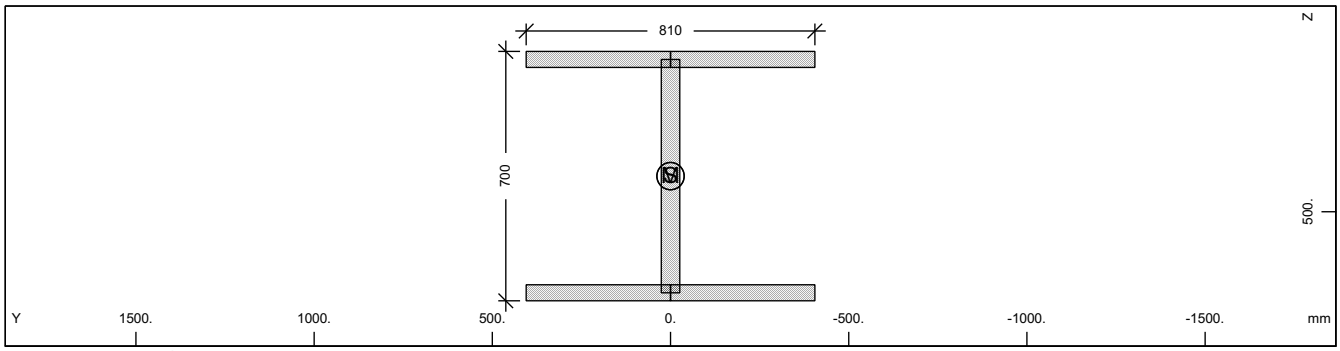

Cross section No. 352

Static properties of cross section

Mat NoR	A[cm2] It[cm4]	Ay/Az/Ayz [cm2]	Iy/Iz/Iyz [cm4]	ys/zs [mm]	modules [N/mm2]	gam [kN/m]
1	1069.60	607.50	903669.7	0.0	210000	8.40
	6270.0	288.17	398580.9	400.0	80769	

Additional static properties of cross section

Alfa-T [1/°K]	ymin ymax [mm]	zmin zmax [mm]	hymin hzmin [mm]	AK AB [cm2]	MB	Tau-T Tau-B [1/m3]	Tau-Vy Tau-Vz [1/m2]
1.2E-05	-405.0	-350.0		5.910E+02		6.508E+02	2.058E+01
	405.0	350.0				1.189E+02	3.134E+01

Section values for warping

Wmin[cm2]	Wmax[cm2]	CM[cm6]	CMS[cm4]	ASwyy[cm6]	ASwzz[cm6]	ry[mm]	rz[mm]
-1326.38	1326.38	427502762.	651581.6	-3.01	-6.82	0.0	0.0

Design values of cross section

Mat NoR	A[cm2] It[cm4]	Ay/Az/Ayz [cm2]	Iy/Iz/Iyz [cm4]	ys/zs [mm]	modules [N/mm2]	gam [kN/m]
1	1069.60	607.50	903669.7	0.0	182609	8.40
	6270.0	288.17	398580.9	400.0	70234	

Design forces and moments
(C/E = characteristic plastic/elastic, D=plast.Design, F=elast. Design)

	N[kN]	Vy[kN]	Vz[kN]	Mt[kNm]	My[kNm]	Mz[kNm]	y[mm]	z[mm]	BUCK
C	35831.6	14099.76	6587.62	488.52	9866.45	5093.69	0.0	400.0	c d
C	0.0				0.00	0.00	0.0	0.0	COMB
E	35831.6	9399.84	6171.79	297.21	8649.41	3296.90	0.0	400.0	
D	31157.9	12260.66	5728.37	424.80	8579.52	4429.29	0.0	400.0	
D	0.0				0.00	0.00	0.0	0.0	COMB
F	31157.9	8173.78	5366.77	258.44	7521.22	2866.87	0.0	400.0	

Additional Design Data

M	periphery-O/-I [m2/m] [m2/m]	deff [mm]	t-min [mm]	t-max [mm]	SMP [o/o]	thet-p [tm2/m]	thet-y [tm2/m]	thet-z [tm2/m]	thet-yz [tm2/m]
	4.550	47.0	45.0	52.0	0.0	0.102	0.071	0.031	

SOFiSTiK AG - www.sofistik.de

Composite bridge 38+50+38, b=14.25m, 2x2HL1100R HISTAR460 , slab 0.30m C30/37

Cross section No. 352.5 = CS 30 - in-situ conc:C3

Cross section No. 353 - VFT

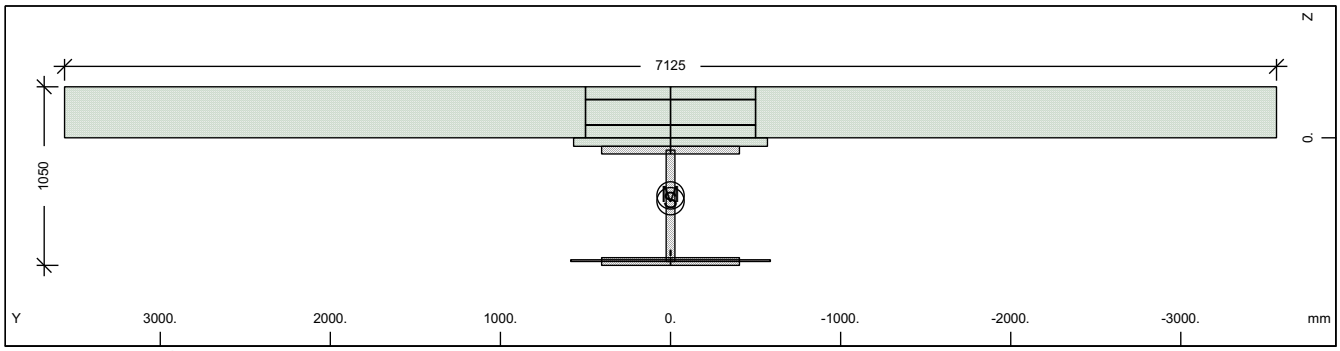

Cross section No. 353 - VFT

Static properties of cross section

Mat NoR	A[cm2] It[cm4]	Ay/Az/Ayz [cm2]	Iy/Iz/Iyz [cm4]	ys/zs [mm]	y/z-sc [mm]	modules [N/mm2]	gam [kN/m]
1	1135.99	645.43	1086280.2	0.0	0.0	210000	63.55
	6270.0	327.35	448426.4	372.9	338.9	80769	

Additional static properties of cross section

Alfa-T [1/°K]	ymin ymax [mm]	zmin zmax [mm]	hymin hzmin [mm]	AK AB [cm2]	MB	Tau-T Tau-B [1/m3]	Tau-Vy Tau-Vz [1/m2]
1.2E-05	-3562.5	-672.9		9.935E+01		1.715E+02	2.655E+01
	3562.5	377.1		2.206E+04		1.189E+02	2.907E+01

Section values for warping

Wmin[cm2]	Wmax[cm2]	CM[cm6]	CMS[cm4]	ASwyy[cm6]	ASwzz[cm6]	ry[mm]	rz[mm]
-17415.78	17415.78	564328746.	771743.0	0.60	1.46	0.0	40.8

Partial cross sections

Mat NoR	A[cm2] It[cm4]	Ay/Az/Ayz [cm2]	Iy/Iz/Iyz [cm4]	ys/zs [mm]	modules [N/mm2]	gam [kN/m]
1	1069.60	541.76	903669.7	0.0	210000	8.40
	7990.7	313.84	398580.9	400.0	80769	
25	117.40		9.8	0.0	10667	0.29
	539368.1	0.00	0.0	722.5	4444	
210	0.64	0.00	0.0	0.0	200000	0.00
	2.2	0.00	0.0	677.5	76923	
31	21945.00	81034377.	170028.4	0.0	0	54.86
	6417251.4	191356.89	904880243.	-145.5	0	
300	62.80	108.42	3532.5	0.0	200000	0.00
	2.1	14.01	52333.3	-150.0	76923	

Design values of cross section

Mat NoR	A[cm2] It[cm4]	Ay/Az/Ayz [cm2]	Iy/Iz/Iyz [cm4]	ys/zs [mm]	modules [N/mm2]	gam [kN/m]
1	1134.59	645.34	1084577.3	0.0	182609	63.55
	6270.0	327.18	448425.4	372.5	70234	

Design forces and moments
(C/E = characteristic plastic/elastic, D=plast.Design, F=elast. Design)

	N[kN]	Vy[kN]	Vz[kN]	Mt[kNm]	My[kNm]	Mz[kNm]	y[mm]	z[mm]	BUCK
C	39003.8	52140.45	36043.66	99179.80	22340.65	60206.52	279.8	-131.	c c
C	-68069.4				45787.38	0.00	0.0	372.9	COMB
C	-33093.6				0.00	63285.64	0.0	0.0	COMB
C	262309.1	52140.45	36043.66	99179.79	-11470.1	-60108.0	-280.	319.4	
C	1882.2				-11539.4	0.00	0.0	372.9	COMB
C	-33093.6				0.00	-63285.6	0.0	0.0	COMB
E	38055.5	10575.36	6652.62	96.23	9538.58	3709.21	0.0	372.9	

SOFiSTiK AG - www.sofistik.de

Composite bridge 38+50+38, b=14.25m, 2x2HL1100R HISTAR460 , slab 0.30m C30/37

Design forces and moments
(C/E = characteristic plastic/elastic, D=plast.Design, F=elast. Design)

	N[kN]	Vy[kN]	Vz[kN]	Mt[kNm]	My[kNm]	Mz[kNm]	y[mm]	z[mm]	BUCK
E	-38055.5	10575.36	6652.62	96.23	-9538.58	-3709.21	0.0	372.9	
D	33916.3	37992.72	25995.66	66234.62	18630.17	42170.82	186.1	-81.2	
D	-45818.5				32864.53	0.00	0.0	372.9	COMB
D	-22062.4				0.00	43383.25	0.0	0.0	COMB
D	166958.9	37992.72	25995.66	66234.62	-9972.46	-42127.1	-186.	317.5	
D	1693.7				-10032.5	0.00	0.0	372.9	COMB
D	-22062.4				0.00	-43383.3	0.0	0.0	COMB
F	33091.7	9195.97	5784.89	64.15	8294.41	3225.40	0.0	372.9	
F	-33091.7	9195.97	5784.89	64.15	-8294.41	-3225.40	0.0	372.9	

Additional Design Data

M	periphery-O/-I [m2/m]	[m2/m]	deff [mm]	t-min [mm]	t-max [mm]	SMP [o/o]	thet-p [tm2/m]	thet-y [tm2/m]	thet-z [tm2/m]	thet-yz [tm2/m]
	25.104		9.1	3.1	300.0	0.0	22.964	0.310	22.653	
1	4.550		47.0	45.0	52.0	0.0	0.102	0.071	0.031	
25	0.020		1174.0			0.0	0.000	0.000		
**	0.004		32.0			0.0	0.000		0.000	
31	16.530		265.5	50.0	300.0	0.0	22.626	0.004	22.622	
**	4.000		3.1	3.1	3.1	0.0	0.000	0.000	0.000	

Cross section No. 353.1 = CS 1 - steel alone

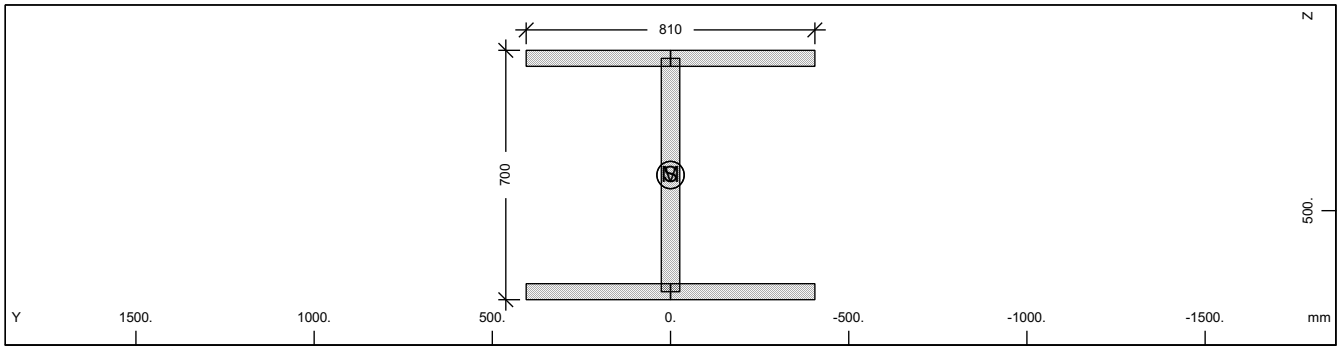

Cross section No. 353

Static properties of cross section

Mat NoR	A[cm2] It[cm4]	Ay/Az/Ayz [cm2]	Iy/Iz/Iyz [cm4]	ys/zs [mm]	modules [N/mm2]	gam [kN/m]
1	1069.60	607.50	903669.7	0.0	210000	8.40
	6270.0	288.17	398580.9	400.0	80769	

Additional static properties of cross section

Alfa-T [1/°K]	ymin ymax [mm]	zmin zmax [mm]	hymin hzmin [mm]	AK AB [cm2]	MB	Tau-T Tau-B [1/m3]	Tau-Vy Tau-Vz [1/m2]
1.2E-05	-405.0	-350.0		5.910E+02		6.508E+02	2.058E+01
	405.0	350.0				1.189E+02	3.134E+01

Section values for warping

Wmin[cm2]	Wmax[cm2]	CM[cm6]	CMS[cm4]	ASwyy[cm6]	ASwzz[cm6]	ry[mm]	rz[mm]
-1326.38	1326.38	427502762.	651581.6	-3.01	-6.82	0.0	0.0

Design values of cross section

Mat NoR	A[cm2] It[cm4]	Ay/Az/Ayz [cm2]	Iy/Iz/Iyz [cm4]	ys/zs [mm]	modules [N/mm2]	gam [kN/m]
1	1069.60	607.50	903669.7	0.0	182609	8.40
	6270.0	288.17	398580.9	400.0	70234	

SOFiSTiK AG - www.sofistik.de

Composite bridge 38+50+38, b=14.25m, 2x2HL1100R HISTAR460 , slab 0.30m C30/37

Design forces and moments
(C/E = characteristic plastic/elastic, D=plast.Design, F=elast. Design)

	N[kN]	Vy[kN]	Vz[kN]	Mt[kNm]	My[kNm]	Mz[kNm]	y[mm]	z[mm]	BUCK
C	35831.6	14099.76	6587.62	488.52	9866.45	5093.69	0.0	400.0	c d
C	0.0				0.00	0.00	0.0	0.0	COMB
E	35831.6	9399.84	6171.79	297.21	8649.41	3296.90	0.0	400.0	
D	31157.9	12260.66	5728.37	424.80	8579.52	4429.29	0.0	400.0	
D	0.0				0.00	0.00	0.0	0.0	COMB
F	31157.9	8173.78	5366.77	258.44	7521.22	2866.87	0.0	400.0	

Additional Design Data

M	periphery-O/-I [m2/m]	[m2/m]	deff [mm]	t-min [mm]	t-max [mm]	SMP [o/o]	thet-p [tm2/m]	thet-y [tm2/m]	thet-z [tm2/m]	thet-yz [tm2/m]
	4.550		47.0	45.0	52.0	0.0	0.102	0.071	0.031	

Cross section No. 353.2 = CS 10 - prefab. slab C1

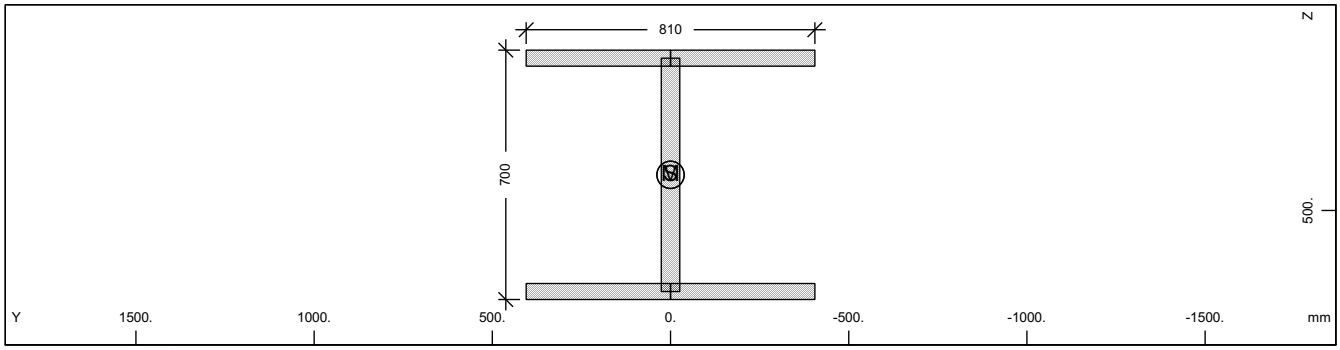

Cross section No. 353

Static properties of cross section

Mat NoR	A[cm2] It[cm4]	Ay/Az/Ayz [cm2]	Iy/Iz/Iyz [cm4]	ys/zs [mm]	modules [N/mm2]	gam [kN/m]
1	1069.60	607.50	903669.7	0.0	210000	8.40
	6270.0	288.17	398580.9	400.0	80769	

Additional static properties of cross section

Alfa-T [1/°K]	ymin ymax [mm]	zmin zmax [mm]	hymin hzmin [mm]	AK AB [cm2]	MB	Tau-T Tau-B [1/m3]	Tau-Vy Tau-Vz [1/m2]
1.2E-05	-405.0	-350.0		5.910E+02		6.508E+02	2.058E+01
	405.0	350.0				1.189E+02	3.134E+01

Section values for warping

Wmin[cm2]	Wmax[cm2]	CM[cm6]	CMS[cm4]	ASwyy[cm6]	ASwzz[cm6]	ry[mm]	rz[mm]
-1326.38	1326.38	427502762.	651581.6	-3.01	-6.82	0.0	0.0

Design values of cross section

Mat NoR	A[cm2] It[cm4]	Ay/Az/Ayz [cm2]	Iy/Iz/Iyz [cm4]	ys/zs [mm]	modules [N/mm2]	gam [kN/m]
1	1069.60	607.50	903669.7	0.0	182609	8.40
	6270.0	288.17	398580.9	400.0	70234	

Design forces and moments
(C/E = characteristic plastic/elastic, D=plast.Design, F=elast. Design)

	N[kN]	Vy[kN]	Vz[kN]	Mt[kNm]	My[kNm]	Mz[kNm]	y[mm]	z[mm]	BUCK
C	35831.6	14099.76	6587.62	488.52	9866.45	5093.69	0.0	400.0	c d
C	0.0				0.00	0.00	0.0	0.0	COMB
E	35831.6	9399.84	6171.79	297.21	8649.41	3296.90	0.0	400.0	
D	31157.9	12260.66	5728.37	424.80	8579.52	4429.29	0.0	400.0	
D	0.0				0.00	0.00	0.0	0.0	COMB
F	31157.9	8173.78	5366.77	258.44	7521.22	2866.87	0.0	400.0	

SOFiSTiK AG - www.sofistik.de

Composite bridge 38+50+38, b=14.25m, 2x2HL1100R HISTAR460 , slab 0.30m C30/37

Additional Design Data

M	periphery-O/-I [m2/m]	[m2/m]	deff [mm]	t-min [mm]	t-max [mm]	SMP [o/o]	thet-p [tm2/m]	thet-y [tm2/m]	thet-z [tm2/m]	thet-yz [tm2/m]
	4.550		47.0	45.0	52.0	0.0	0.102	0.071	0.031	

Cross section No. 353.3 = CS 20 - in-situ conc:C2

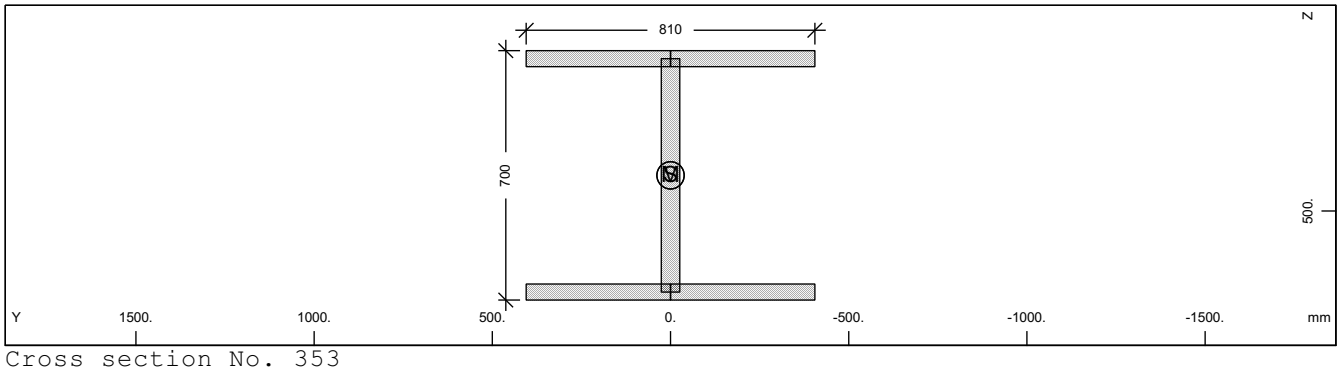

Cross section No. 353

Static properties of cross section

Mat NoR	A[cm2] It[cm4]	Ay/Az/Ayz [cm2]	Iy/Iz/Iyz [cm4]	ys/zs [mm]	modules [N/mm2]	gam [kN/m]
1	1069.60	607.50	903669.7	0.0	210000	8.40
	6270.0	288.17	398580.9	400.0	80769	

Additional static properties of cross section

Alfa-T [1/°K]	ymin ymax [mm]	zmin zmax [mm]	hymin hzmin [mm]	AK AB [cm2]	MB	Tau-T Tau-B [1/m3]	Tau-Vy Tau-Vz [1/m2]
1.2E-05	-405.0	-350.0		5.910E+02		6.508E+02	2.058E+01
	405.0	350.0				1.189E+02	3.134E+01

Section values for warping

Wmin[cm2]	Wmax[cm2]	CM[cm6]	CMS[cm4]	ASwyy[cm6]	ASwzz[cm6]	ry[mm]	rz[mm]
-1326.38	1326.38	427502762.	651581.6	-3.01	-6.82	0.0	0.0

Design values of cross section

Mat NoR	A[cm2] It[cm4]	Ay/Az/Ayz [cm2]	Iy/Iz/Iyz [cm4]	ys/zs [mm]	modules [N/mm2]	gam [kN/m]
1	1069.60	607.50	903669.7	0.0	182609	8.40
	6270.0	288.17	398580.9	400.0	70234	

Design forces and moments
(C/E = characteristic plastic/elastic, D=plast.Design, F=elast. Design)

	N[kN]	Vy[kN]	Vz[kN]	Mt[kNm]	My[kNm]	Mz[kNm]	y[mm]	z[mm]	BUCK
C	35831.6	14099.76	6587.62	488.52	9866.45	5093.69	0.0	400.0	c d
C	0.0				0.00	0.00	0.0	0.0	COMB
E	35831.6	9399.84	6171.79	297.21	8649.41	3296.90	0.0	400.0	
D	31157.9	12260.66	5728.37	424.80	8579.52	4429.29	0.0	400.0	
D	0.0				0.00	0.00	0.0	0.0	COMB
F	31157.9	8173.78	5366.77	258.44	7521.22	2866.87	0.0	400.0	

Additional Design Data

M	periphery-O/-I [m2/m]	[m2/m]	deff [mm]	t-min [mm]	t-max [mm]	SMP [o/o]	thet-p [tm2/m]	thet-y [tm2/m]	thet-z [tm2/m]	thet-yz [tm2/m]
	4.550		47.0	45.0	52.0	0.0	0.102	0.071	0.031	

SOFiSTiK AG - www.sofistik.de

Composite bridge 38+50+38, b=14.25m, 2x2HL1100R HISTAR460 , slab 0.30m C30/37

Cross section No. 353.4 = CS 21 - reinf active:C2

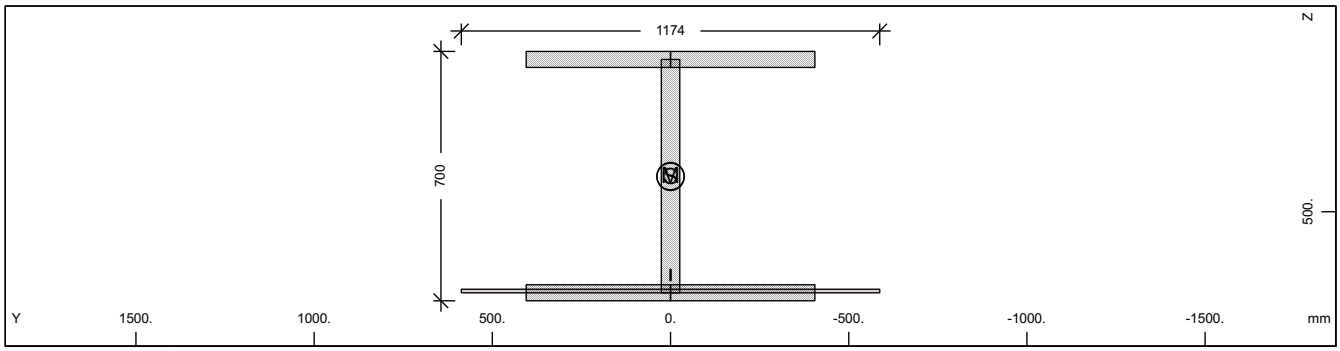

Cross section No. 353

Static properties of cross section

Mat NoR	A[cm2] It[cm4]	Ay/Az/Ayz [cm2]	Iy/Iz/Iyz [cm4]	ys/zs [mm]	modules [N/mm2]	gam [kN/m]
1	1076.18	607.50	910303.2	0.0	210000	8.69
	6270.0	288.72	398580.9	401.9	80769	

Additional static properties of cross section

Alfa-T [1/°K]	ymin ymax [mm]	zmin zmax [mm]	hymin hzmin [mm]	AK AB [cm2]	MB	Tau-T Tau-B [1/m3]	Tau-Vy Tau-Vz [1/m2]
1.2E-05	-587.0	-351.9		9.934E+01		1.715E+02	2.058E+01
	587.0	348.1		1.174E+02		1.189E+02	3.133E+01

Section values for warping

Wmin[cm2]	Wmax[cm2]	CM[cm6]	CMS[cm4]	ASwyy[cm6]	ASwzz[cm6]	ry[mm]	rz[mm]
-1326.38	1326.38	427502820.	651581.7	-1.15	-2.63	0.0	-0.5

Partial cross sections

Mat NoR	A[cm2] It[cm4]	Ay/Az/Ayz [cm2]	Iy/Iz/Iyz [cm4]	ys/zs [mm]	modules [N/mm2]	gam [kN/m]
1	1069.60	607.50	903669.7	0.0	210000	8.40
	7990.7	288.72	398580.9	400.0	80769	
25	117.40		9.8	0.0	10667	0.29
	539368.1	0.00	0.0	722.5	4444	
210	0.64	0.00	0.0	0.0	200000	0.00
	2.2	0.00	0.0	677.5	76923	

Design values of cross section

Mat NoR	A[cm2] It[cm4]	Ay/Az/Ayz [cm2]	Iy/Iz/Iyz [cm4]	ys/zs [mm]	modules [N/mm2]	gam [kN/m]
1	1074.78	607.50	908871.5	0.0	182609	8.69
	6270.0	288.72	398580.9	401.5	70234	

Design forces and moments
(C/E = characteristic plastic/elastic, D=plast.Design, F=elast. Design)

	N[kN]	Vy[kN]	Vz[kN]	Mt[kNm]	My[kNm]	Mz[kNm]	y[mm]	z[mm]	BUCK
C	35863.8	14118.33	7243.22	609.92	9999.89	5145.57	0.3	398.7	c c
C	-115.5				9998.92	0.00	0.0	401.9	COMB
C	-176.1				0.00	5145.63	0.0	0.0	COMB
C	-36216.0	14118.33	7243.22	609.92	-9887.60	-5145.48	-0.3	408.7	
C	-236.7				-9886.02	0.00	0.0	401.9	COMB
C	-176.1				0.00	-5145.63	0.0	0.0	COMB
E	36051.9	9399.84	6173.45	96.22	8664.75	3296.90	0.0	401.9	
E	-36051.9	9399.84	6173.45	96.22	-8664.75	-3296.90	0.0	401.9	
D	31185.9	12276.81	6259.15	507.29	8670.18	4463.89	0.2	399.2	
D	-84.3				8669.65	0.00	0.0	401.9	COMB
D	-117.4				0.00	4463.97	0.0	0.0	COMB
D	-31420.7	12276.81	6259.15	507.29	-8595.17	-4463.85	-0.2	406.9	
D	-150.5				-8594.38	0.00	0.0	401.9	COMB
D	-117.4				0.00	-4463.97	0.0	0.0	COMB

SOFiSTiK AG - www.sofistik.de

Composite bridge 38+50+38, b=14.25m, 2x2HL1100R HISTAR460 , slab 0.30m C30/37

Design forces and moments
(C/E = characteristic plastic/elastic, D=plast.Design, F=elast. Design)

	N[kN]	Vy[kN]	Vz[kN]	Mt[kNm]	My[kNm]	Mz[kNm]	y[mm]	z[mm]	BUCK
F	31349.5	8173.78	5368.22	64.15	7534.57	2866.87	0.0	401.9	
F	-31349.5	8173.78	5368.22	64.15	-7534.57	-2866.87	0.0	401.9	

Additional Design Data

M	periphery-O/-I [m2/m]	[m2/m]	deff [mm]	t-min [mm]	t-max [mm]	SMP [o/o]	thet-p [tm2/m]	thet-y [tm2/m]	thet-z [tm2/m]	thet-yz [tm2/m]
	4.574		47.1	32.0	52.0	0.0	0.105	0.074	0.031	
1	4.550		47.0	45.0	52.0	0.0	0.102	0.071	0.031	
25	0.020		1174.0			0.0	0.000	0.000		
**	0.004		32.0			0.0	0.000		0.000	

Cross section No. 353.5 = CS 30 - in-situ conc:C3

Cross section No. 354 - VFT (351)

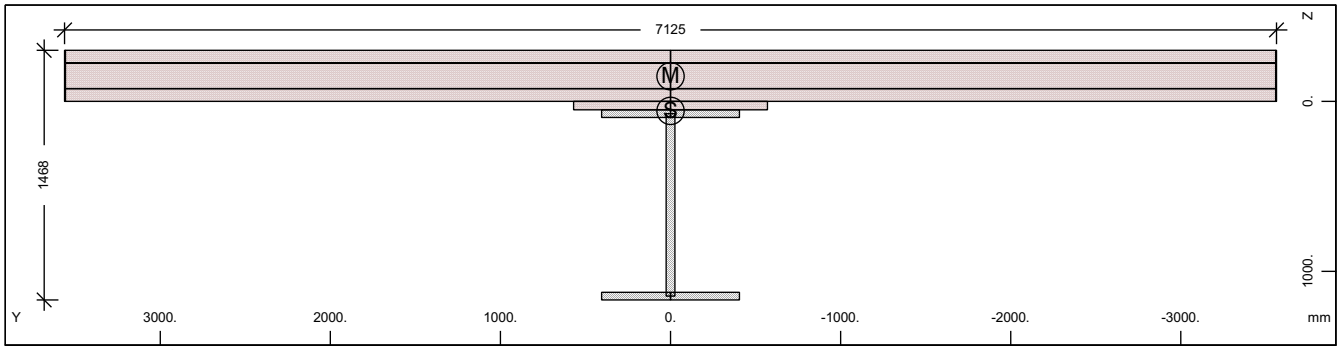

Cross section No. 354 - VFT (351)

Static properties of cross section

Mat NoR	A[cm2] It[cm4]	Ay/Az/Ayz [cm2]	Iy/Iz/Iyz [cm4]	ys/zs [mm]	y/z-sc [mm]	modules [N/mm2]	gam [kN/m]
1	4815.82	3118.65	8035554.0	0.0	0.0	210000	64.97
	6270.0	471.68	145603753.	56.1	-147.8	80769	

Additional static properties of cross section

Alfa-T [1/°K]	ymin ymax [mm]	zmin zmax [mm]	hymin hzmin [mm]	AK AB [cm2]	MB	Tau-T Tau-B [1/m3]	Tau-Vy Tau-Vz [1/m2]
1.2E-05	-3562.5	-356.1		1.437E+04		4.747E+00	4.139E+00
	3562.5	1111.9		2.195E+04		1.255E+02	1.689E+01

Section values for warping

Wmin[cm2]	Wmax[cm2]	CM[cm6]	CMS[cm4]	ASwyy[cm6]	ASwzz[cm6]	ry[mm]	rz[mm]
-5237.89	5237.89	3708299497.	924103.7	5858.15	323.30	0.0	-2510.0

Partial cross sections

Mat NoR	A[cm2] It[cm4]	Ay/Az/Ayz [cm2]	Iy/Iz/Iyz [cm4]	ys/zs [mm]	modules [N/mm2]	gam [kN/m]
1	1286.96	0.12	2633627.3	0.0	210000	10.10
	9949.8	271.17	398580.9	609.0	80769	
30	21915.00	17819.13	170022.2	0.0	32837	54.79
	6408250.4	1141.50	901077848.	-145.4	13682	
31	30.00	0.00	0.0	0.0	0	0.08
	9000.6	0.00	3802349.1	-150.0	0	
300	107.24	105.06	6032.1	0.0	200000	0.00
	0.2	7.51	4523914.0	-150.0	76923	

SOFiSTiK AG - www.sofistik.de

Composite bridge 38+50+38, b=14.25m, 2x2HL1100R HISTAR460 , slab 0.30m C30/37

Design values of cross section

Mat NoR	A[cm2] It[cm4]	Ay/Az/Ayz [cm2]	Iy/Iz/Iyz [cm4]	ys/zs [mm]	modules [N/mm2]	gam [kN/m]
1	4016.25	2414.34	7640002.0	0.0	182609	64.97
	6270.0	426.56112727857.		96.2	70234	

Design forces and moments
(C/E = characteristic plastic/elastic, D=plast.Design, F=elast. Design)

	N[kN]	Vy[kN]	Vz[kN]	Mt[kNm]	My[kNm]	Mz[kNm]	y[mm]	z[mm]	BUCK
C	48475.0	53404.68	39592.08	99166.02	35244.07	70438.37	196.7	-98.3	c d
C	-31378.3				38220.88	0.00	0.0	56.1	COMB
C	-32917.5				0.00	72080.77	0.0	0.0	COMB
C	-114310.	53404.68	39592.08	99166.00	-21773.2	-70438.4	-197.	454.6	
C	-34456.7				-24953.5	0.00	0.0	56.1	COMB
C	-32917.5				0.00	-72080.8	0.0	0.0	COMB
E	161330.0	24280.53	11453.52	3556.84	24209.37	78525.45	0.0	56.1	
E	-92396.0	24280.53	11453.52	3556.84	-24209.4	-78525.5	0.0	56.1	
D	42152.2	39092.05	29120.55	66245.72	29597.63	50563.77	93.7	-69.6	
D	-13927.7				30543.60	0.00	0.0	56.1	COMB
D	-21945.0				0.00	51041.69	0.0	0.0	COMB
D	-86042.2	39092.05	29120.55	66245.73	-18933.3	-50563.8	-93.7	453.8	
D	-29962.3				-21698.7	0.00	0.0	56.1	COMB
D	-21945.0				0.00	-51041.7	0.0	0.0	COMB
F	140287.0	16187.02	7710.96	2371.23	21051.62	52350.30	0.0	56.1	
F	-61597.3	16187.02	7710.96	2371.23	-21051.6	-52350.3	0.0	56.1	

Additional Design Data

M	periphery-O/-I [m2/m]	[m2/m]	deff [mm]	t-min [mm]	t-max [mm]	SMP [o/o]	thet-p [tm2/m]	thet-y [tm2/m]	thet-z [tm2/m]	thet-yz [tm2/m]
	50.376		19.1	0.8	300.0	0.0	23.350	0.697	22.653	
1	5.386		47.8	45.0	52.0	0.0	0.238	0.207	0.031	
30	16.510		600.0	50.0	300.0	0.0	22.531	0.004	22.527	
31	0.020		300.0	300.0	300.0	0.0	0.095		0.095	
**	28.460		0.8	0.8	0.8	0.0	0.000	0.000	0.000	

Cross section No. 354.1 = CS 1 - steel alone

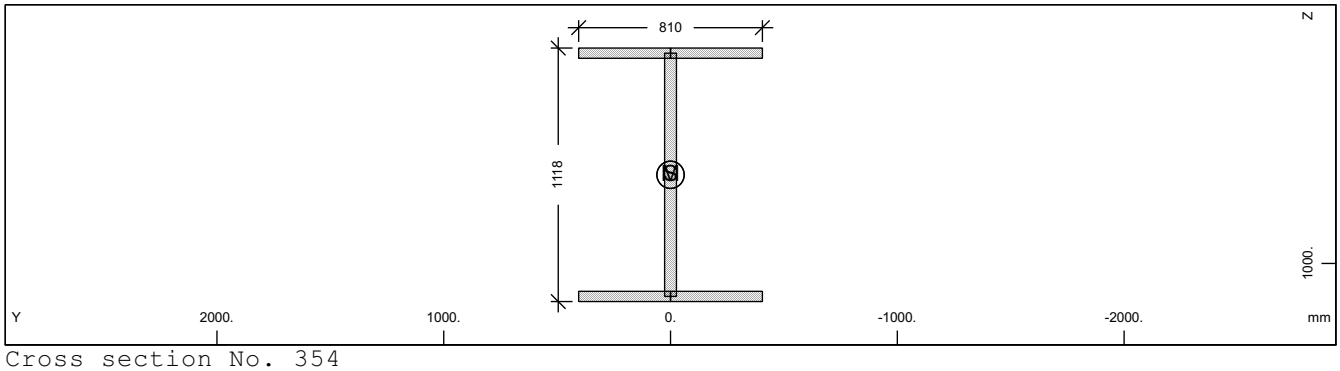

Cross section No. 354

Static properties of cross section

Mat NoR	A[cm2] It[cm4]	Ay/Az/Ayz [cm2]	Iy/Iz/Iyz [cm4]	ys/zs [mm]	modules [N/mm2]	gam [kN/m]
1	1286.96	607.50	2633627.3	0.0	210000	10.10
	6270.0	506.98	398580.9	609.0	80769	

Additional static properties of cross section

Alfa-T [1/°K]	ymin ymax [mm]	zmin zmax [mm]	hymin hzmin [mm]	AK AB [cm2]	MB	Tau-T Tau-B [1/m3]	Tau-Vy Tau-Vz [1/m2]
1.2E-05	-405.0	-559.0		7.359E+02		5.226E+02	2.058E+01
	405.0	559.0				1.255E+02	1.974E+01

SOFiSTiK AG - www.sofistik.de

Composite bridge 38+50+38, b=14.25m, 2x2HL1100R HISTAR460 , slab 0.30m C30/37

Section values for warping

Wmin[cm2]	Wmax[cm2]	CM[cm6]	CMS[cm4]	ASwyy[cm6]	ASwzz[cm6]	ry[mm]	rz[mm]
-2172.83	2172.831147244363.	1748581.4		-0.16	-1.04	0.0	0.0

Design values of cross section

Mat NoR	A[cm2] It[cm4]	Ay/Az/Ayz [cm2]	Iy/Iz/Iyz [cm4]	ys/zs [mm]	modules [N/mm2]	gam [kN/m]
1	1286.96	607.50	2633627.3	0.0	182609	10.10
	6270.0	506.98	398580.9	609.0	70234	

Design forces and moments
(C/E = characteristic plastic/elastic, D=plast.Design, F=elast. Design)

	N[kN]	Vy[kN]	Vz[kN]	Mt[kNm]	My[kNm]	Mz[kNm]	y[mm]	z[mm]	BUCK
C	43113.2	14099.76	10791.64	597.83	18116.18	5188.35	0.0	609.0	c d
C	0.0				0.00	0.00	0.0	0.0	COMB
E	43113.2	9399.84	9796.03	370.08	15782.92	3296.90	0.0	609.0	
D	37489.7	12260.66	9384.03	519.85	15753.20	4511.61	0.0	609.0	
D	0.0				0.00	0.00	0.0	0.0	COMB
F	37489.7	8173.78	8518.29	321.81	13724.27	2866.87	0.0	609.0	

Additional Design Data

M	periphery-O/-I [m2/m]	[m2/m]	deff [mm]	t-min [mm]	t-max [mm]	SMP [o/o]	thet-p [tm2/m]	thet-y [tm2/m]	thet-z [tm2/m]	thet-yz [tm2/m]
	5.386		47.8	45.0	52.0	0.0	0.238	0.207	0.031	

Cross section No. 354.2 = CS 10 - prefab. slab C1

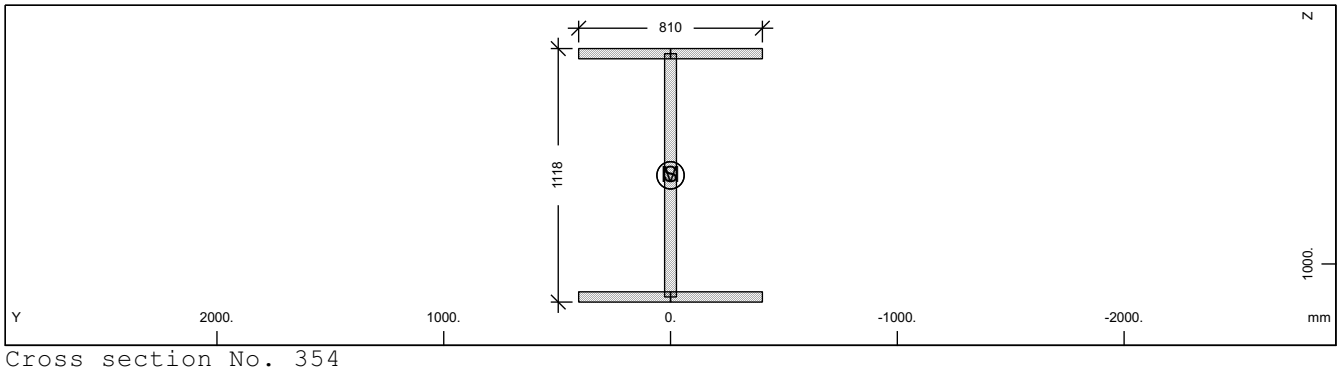

Cross section No. 354

Static properties of cross section

Mat NoR	A[cm2] It[cm4]	Ay/Az/Ayz [cm2]	Iy/Iz/Iyz [cm4]	ys/zs [mm]	modules [N/mm2]	gam [kN/m]
1	1286.96	607.50	2633627.3	0.0	210000	10.10
	6270.0	506.98	398580.9	609.0	80769	

Additional static properties of cross section

Alfa-T [1/°K]	ymin ymax [mm]	zmin zmax [mm]	hymin hzmin [mm]	AK AB [cm2]	MB	Tau-T Tau-B [1/m3]	Tau-Vy Tau-Vz [1/m2]
1.2E-05	-405.0	-559.0		7.359E+02		5.226E+02	2.058E+01
	405.0	559.0				1.255E+02	1.974E+01

Section values for warping

Wmin[cm2]	Wmax[cm2]	CM[cm6]	CMS[cm4]	ASwyy[cm6]	ASwzz[cm6]	ry[mm]	rz[mm]
-2172.83	2172.831147244363.	1748581.4		-0.16	-1.04	0.0	0.0

Design values of cross section

Mat NoR	A[cm2] It[cm4]	Ay/Az/Ayz [cm2]	Iy/Iz/Iyz [cm4]	ys/zs [mm]	modules [N/mm2]	gam [kN/m]
1	1286.96	607.50	2633627.3	0.0	182609	10.10
	6270.0	506.98	398580.9	609.0	70234	

SOFiSTiK AG - www.sofistik.de

Composite bridge 38+50+38, b=14.25m, 2x2HL1100R HISTAR460 , slab 0.30m C30/37

Design forces and moments
(C/E = characteristic plastic/elastic, D=plast.Design, F=elast. Design)

	N[kN]	Vy[kN]	Vz[kN]	Mt[kNm]	My[kNm]	Mz[kNm]	y[mm]	z[mm]	BUCK
C	43113.2	14099.76	10791.64	597.83	18116.18	5188.35	0.0	609.0	c d
C	0.0				0.00	0.00	0.0	0.0	COMB
E	43113.2	9399.84	9796.03	370.08	15782.92	3296.90	0.0	609.0	
D	37489.7	12260.66	9384.03	519.85	15753.20	4511.61	0.0	609.0	
D	0.0				0.00	0.00	0.0	0.0	COMB
F	37489.7	8173.78	8518.29	321.81	13724.27	2866.87	0.0	609.0	

Additional Design Data

M	periphery-O/-I [m2/m]	[m2/m]	deff [mm]	t-min [mm]	t-max [mm]	SMP [o/o]	thet-p [tm2/m]	thet-y [tm2/m]	thet-z [tm2/m]	thet-yz [tm2/m]
	5.386		47.8	45.0	52.0	0.0	0.238	0.207	0.031	

Cross section No. 354.3 = CS 20 - in-situ conc:C2

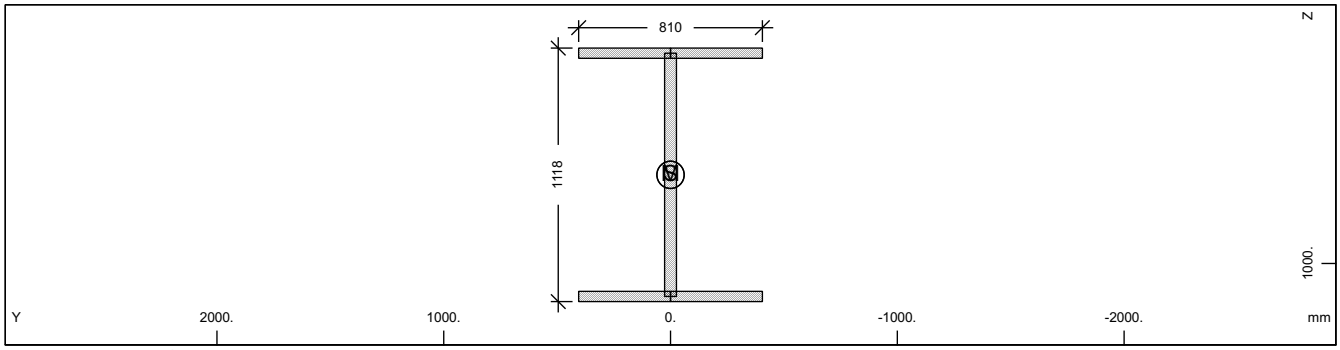

Cross section No. 354

Static properties of cross section

Mat NoR	A[cm2] It[cm4]	Ay/Az/Ayz [cm2]	Iy/Iz/Iyz [cm4]	ys/zs [mm]	modules [N/mm2]	gam [kN/m]
1	1286.96	607.50	2633627.3	0.0	210000	10.10
	6270.0	506.98	398580.9	609.0	80769	

Additional static properties of cross section

Alfa-T [1/°K]	ymin ymax [mm]	zmin zmax [mm]	hymin hzmin [mm]	AK AB [cm2]	MB	Tau-T Tau-B [1/m3]	Tau-Vy Tau-Vz [1/m2]
1.2E-05	-405.0	-559.0		7.359E+02		5.226E+02	2.058E+01
	405.0	559.0				1.255E+02	1.974E+01

Section values for warping

Wmin[cm2]	Wmax[cm2]	CM[cm6]	CMS[cm4]	ASwyy[cm6]	ASwzz[cm6]	ry[mm]	rz[mm]
-2172.83	2172.831147244363.		1748581.4	-0.16	-1.04	0.0	0.0

Design values of cross section

Mat NoR	A[cm2] It[cm4]	Ay/Az/Ayz [cm2]	Iy/Iz/Iyz [cm4]	ys/zs [mm]	modules [N/mm2]	gam [kN/m]
1	1286.96	607.50	2633627.3	0.0	182609	10.10
	6270.0	506.98	398580.9	609.0	70234	

Design forces and moments
(C/E = characteristic plastic/elastic, D=plast.Design, F=elast. Design)

	N[kN]	Vy[kN]	Vz[kN]	Mt[kNm]	My[kNm]	Mz[kNm]	y[mm]	z[mm]	BUCK
C	43113.2	14099.76	10791.64	597.83	18116.18	5188.35	0.0	609.0	c d
C	0.0				0.00	0.00	0.0	0.0	COMB
E	43113.2	9399.84	9796.03	370.08	15782.92	3296.90	0.0	609.0	
D	37489.7	12260.66	9384.03	519.85	15753.20	4511.61	0.0	609.0	
D	0.0				0.00	0.00	0.0	0.0	COMB
F	37489.7	8173.78	8518.29	321.81	13724.27	2866.87	0.0	609.0	

SOFiSTiK AG - www.sofistik.de

Composite bridge 38+50+38, b=14.25m, 2x2HL1100R HISTAR460 , slab 0.30m C30/37

Additional Design Data

M	periphery-O/-I [m2/m]	[m2/m]	deff [mm]	t-min [mm]	t-max [mm]	SMP [o/o]	thet-p [tm2/m]	thet-y [tm2/m]	thet-z [tm2/m]	thet-yz [tm2/m]
	5.386		47.8	45.0	52.0	0.0	0.238	0.207	0.031	

Cross section No. 354.4 = CS 21 - reinf active:C2

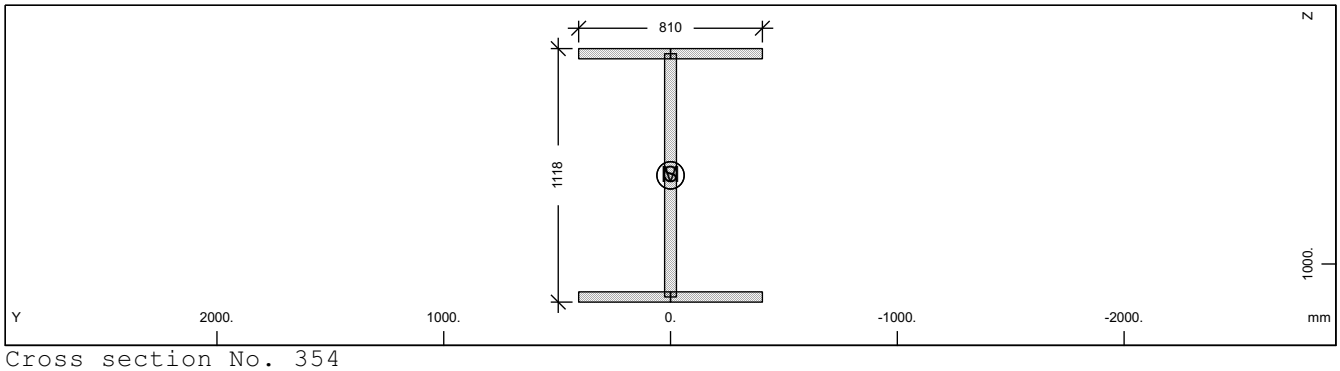

Cross section No. 354

Static properties of cross section

Mat NoR	A[cm2] It[cm4]	Ay/Az/Ayz [cm2]	Iy/Iz/Iyz [cm4]	ys/zs [mm]	modules [N/mm2]	gam [kN/m]
1	1286.96	607.50	2633627.3	0.0	210000	10.10
	6270.0	506.98	398580.9	609.0	80769	

Additional static properties of cross section

Alfa-T [1/°K]	ymin ymax [mm]	zmin zmax [mm]	hymin hzmin [mm]	AK AB [cm2]	MB	Tau-T Tau-B [1/m3]	Tau-Vy Tau-Vz [1/m2]
1.2E-05	-405.0	-559.0		7.359E+02		5.226E+02	2.058E+01
	405.0	559.0				1.255E+02	1.974E+01

Section values for warping

Wmin[cm2]	Wmax[cm2]	CM[cm6]	CMS[cm4]	ASwyy[cm6]	ASwzz[cm6]	ry[mm]	rz[mm]
-2172.83	2172.831147244363.		1748581.4	-0.16	-1.04	0.0	0.0

Design values of cross section

Mat NoR	A[cm2] It[cm4]	Ay/Az/Ayz [cm2]	Iy/Iz/Iyz [cm4]	ys/zs [mm]	modules [N/mm2]	gam [kN/m]
1	1286.96	607.50	2633627.3	0.0	182609	10.10
	6270.0	506.98	398580.9	609.0	70234	

Design forces and moments
(C/E = characteristic plastic/elastic, D=plast.Design, F=elast. Design)

	N[kN]	Vy[kN]	Vz[kN]	Mt[kNm]	My[kNm]	Mz[kNm]	y[mm]	z[mm]	BUCK
C	43113.2	14099.76	10791.64	597.83	18116.18	5188.35	0.0	609.0	c d
C	0.0				0.00	0.00	0.0	0.0	COMB
E	43113.2	9399.84	9796.03	370.08	15782.92	3296.90	0.0	609.0	
D	37489.7	12260.66	9384.03	519.85	15753.20	4511.61	0.0	609.0	
D	0.0				0.00	0.00	0.0	0.0	COMB
F	37489.7	8173.78	8518.29	321.81	13724.27	2866.87	0.0	609.0	

Additional Design Data

M	periphery-O/-I [m2/m]	[m2/m]	deff [mm]	t-min [mm]	t-max [mm]	SMP [o/o]	thet-p [tm2/m]	thet-y [tm2/m]	thet-z [tm2/m]	thet-yz [tm2/m]
	5.386		47.8	45.0	52.0	0.0	0.238	0.207	0.031	

SOFiSTiK AG - www.sofistik.de

Composite bridge 38+50+38, b=14.25m, 2x2HL1100R HISTAR460 , slab 0.30m C30/37

Cross section No. 354.5 = CS 30 - in-situ conc:C3

Cross section No. 355 - VFT (351)

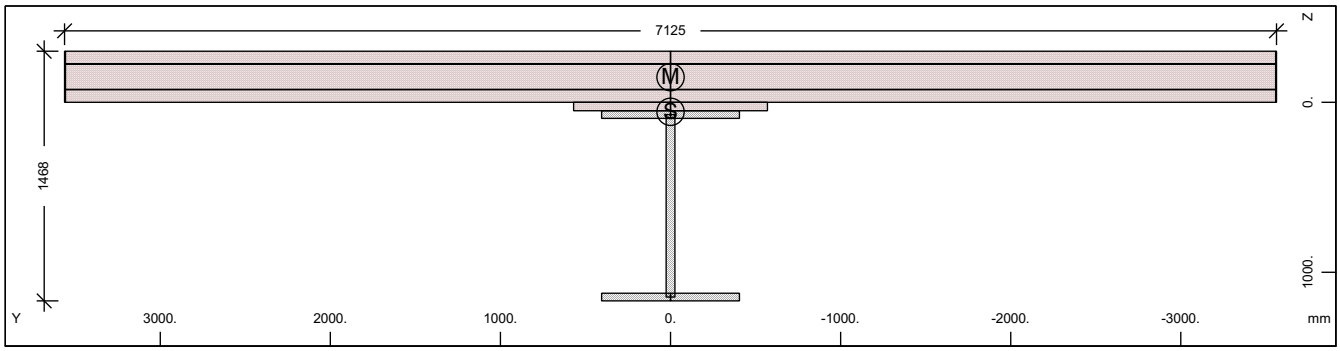

Cross section No. 355 - VFT (351)

Static properties of cross section

Mat NoR	A[cm2] It[cm4]	Ay/Az/Ayz [cm2]	Iy/Iz/Iyz [cm4]	ys/zs [mm]	y/z-sc [mm]	modules [N/mm2]	gam [kN/m]
1	4815.82	3118.65	8035554.0	0.0	0.0	210000	64.97
	6270.0	471.68145603753.		56.1	-147.8	80769	

Additional static properties of cross section

Alfa-T [1/°K]	ymin ymax [mm]	zmin zmax [mm]	hymin hzmin [mm]	AK AB [cm2]	MB	Tau-T Tau-B [1/m3]	Tau-Vy Tau-Vz [1/m2]
1.2E-05	-3562.5	-356.1		1.437E+04		4.747E+00	4.139E+00
	3562.5	1111.9		2.195E+04		1.255E+02	1.689E+01

Section values for warping

Wmin[cm2]	Wmax[cm2]	CM[cm6]	CMS[cm4]	ASwyy[cm6]	ASwzz[cm6]	ry[mm]	rz[mm]
-5237.89	5237.893708299497.		924103.7	5858.15	323.30	0.0	-2510.0

Partial cross sections

Mat NoR	A[cm2] It[cm4]	Ay/Az/Ayz [cm2]	Iy/Iz/Iyz [cm4]	ys/zs [mm]	modules [N/mm2]	gam [kN/m]
1	1286.96	0.12	2633627.3	0.0	210000	10.10
	9949.8	271.17	398580.9	609.0	80769	
30	21915.00	17819.13	170022.2	0.0	32837	54.79
	6408250.4	1141.50901077848.		-145.4	13682	
31	30.00	0.00	0.0	0.0	0	0.08
	9000.6	0.00	3802349.1	-150.0	0	
300	107.24	105.06	6032.1	0.0	200000	0.00
	0.2	7.51	4523914.0	-150.0	76923	

Design values of cross section

Mat NoR	A[cm2] It[cm4]	Ay/Az/Ayz [cm2]	Iy/Iz/Iyz [cm4]	ys/zs [mm]	modules [N/mm2]	gam [kN/m]
1	4016.25	2414.34	7640002.0	0.0	182609	64.97
	6270.0	426.56112727857.		96.2	70234	

Design forces and moments
(C/E = characteristic plastic/elastic, D=plast.Design, F=elast. Design)

	N[kN]	Vy[kN]	Vz[kN]	Mt[kNm]	My[kNm]	Mz[kNm]	y[mm]	z[mm]	BUCK
C	48475.0	53404.68	39592.08	99166.02	35244.07	70438.37	196.7	-98.3	c d
C	-31378.3				38220.88	0.00	0.0	56.1	COMB
C	-32917.5				0.00	72080.77	0.0	0.0	COMB
C	-114310.	53404.68	39592.08	99166.00	-21773.2	-70438.4	-197.	454.6	
C	-34456.7				-24953.5	0.00	0.0	56.1	COMB
C	-32917.5				0.00	-72080.8	0.0	0.0	COMB
E	161330.0	24280.53	11453.52	3556.84	24209.37	78525.45	0.0	56.1	
E	-92396.0	24280.53	11453.52	3556.84	-24209.4	-78525.5	0.0	56.1	
D	42152.2	39092.05	29120.55	66245.72	29597.63	50563.77	93.7	-69.6	

SOFiSTiK AG - www.sofistik.de

Composite bridge 38+50+38, b=14.25m, 2x2HL1100R HISTAR460 , slab 0.30m C30/37

Design forces and moments
(C/E = characteristic plastic/elastic, D=plast.Design, F=elast. Design)

	N[kN]	Vy[kN]	Vz[kN]	Mt[kNm]	My[kNm]	Mz[kNm]	y[mm]	z[mm]	BUCK
D	-13927.7				30543.60	0.00	0.0	56.1	COMB
D	-21945.0				0.00	51041.69	0.0	0.0	COMB
D	-86042.2	39092.05	29120.55	66245.73	-18933.3	-50563.8	-93.7	453.8	
D	-29962.3				-21698.7	0.00	0.0	56.1	COMB
D	-21945.0				0.00	-51041.7	0.0	0.0	COMB
F	140287.0	16187.02	7710.96	2371.23	21051.62	52350.30	0.0	56.1	
F	-61597.3	16187.02	7710.96	2371.23	-21051.6	-52350.3	0.0	56.1	

Additional Design Data

M	periphery-O/-I [m2/m]	[m2/m]	deff [mm]	t-min [mm]	t-max [mm]	SMP [o/o]	thet-p [tm2/m]	thet-y [tm2/m]	thet-z [tm2/m]	thet-yz [tm2/m]
	50.376		19.1	0.8	300.0	0.0	23.350	0.697	22.653	
1	5.386		47.8	45.0	52.0	0.0	0.238	0.207	0.031	
30	16.510		600.0	50.0	300.0	0.0	22.531	0.004	22.527	
31	0.020		300.0	300.0	300.0	0.0	0.095		0.095	
**	28.460		0.8	0.8	0.8	0.0	0.000	0.000	0.000	

Cross section No. 355.1 = CS 1 - steel alone

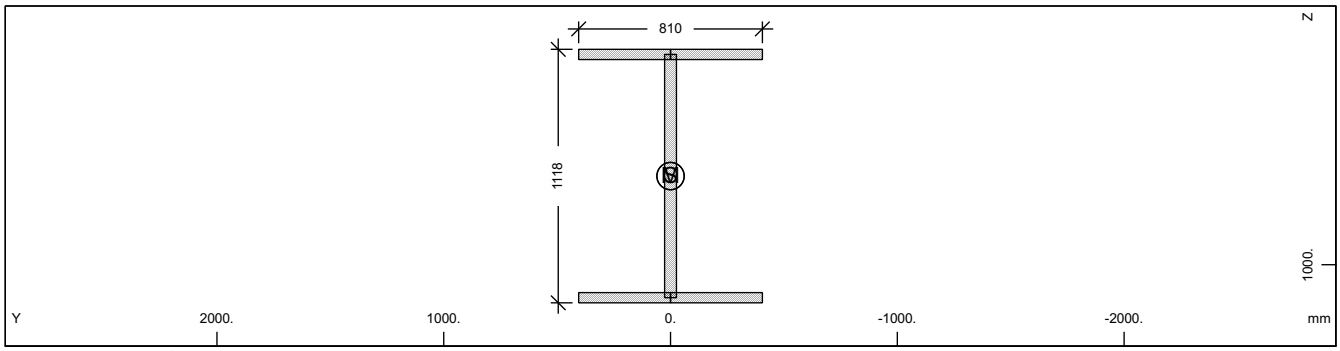

Cross section No. 355

Static properties of cross section

Mat NoR	A[cm2] It[cm4]	Ay/Az/Ayz [cm2]	Iy/Iz/Iyz [cm4]	ys/zs [mm]	modules [N/mm2]	gam [kN/m]
1	1286.96	607.50	2633627.3	0.0	210000	10.10
	6270.0	506.98	398580.9	609.0	80769	

Additional static properties of cross section

Alfa-T [1/°K]	ymin ymax [mm]	zmin zmax [mm]	hymin hzmin [mm]	AK AB [cm2]	MB	Tau-T Tau-B [1/m3]	Tau-Vy Tau-Vz [1/m2]
1.2E-05	-405.0	-559.0		7.359E+02		5.226E+02	2.058E+01
	405.0	559.0				1.255E+02	1.974E+01

Section values for warping

Wmin[cm2]	Wmax[cm2]	CM[cm6]	CMS[cm4]	ASwyy[cm6]	ASwzz[cm6]	ry[mm]	rz[mm]
-2172.83	2172.831147244363.		1748581.4	-0.16	-1.04	0.0	0.0

Design values of cross section

Mat NoR	A[cm2] It[cm4]	Ay/Az/Ayz [cm2]	Iy/Iz/Iyz [cm4]	ys/zs [mm]	modules [N/mm2]	gam [kN/m]
1	1286.96	607.50	2633627.3	0.0	182609	10.10
	6270.0	506.98	398580.9	609.0	70234	

Design forces and moments
(C/E = characteristic plastic/elastic, D=plast.Design, F=elast. Design)

	N[kN]	Vy[kN]	Vz[kN]	Mt[kNm]	My[kNm]	Mz[kNm]	y[mm]	z[mm]	BUCK
C	43113.2	14099.76	10791.64	597.83	18116.18	5188.35	0.0	609.0	c d
C	0.0				0.00	0.00	0.0	0.0	COMB
E	43113.2	9399.84	9796.03	370.08	15782.92	3296.90	0.0	609.0	
D	37489.7	12260.66	9384.03	519.85	15753.20	4511.61	0.0	609.0	

SOFiSTiK AG - www.sofistik.de

Composite bridge 38+50+38, b=14.25m, 2x2HL1100R HISTAR460 , slab 0.30m C30/37

Design forces and moments
(C/E = characteristic plastic/elastic, D=plast.Design, F=elast. Design)

	N[kN]	Vy[kN]	Vz[kN]	Mt[kNm]	My[kNm]	Mz[kNm]	y[mm]	z[mm]	BUCK
D	0.0				0.00	0.00	0.0	0.0	COMB
F	37489.7	8173.78	8518.29	321.81	13724.27	2866.87	0.0	609.0	

Additional Design Data

M	periphery-O/-I [m2/m]	[m2/m]	deff [mm]	t-min [mm]	t-max [mm]	SMP [o/o]	thet-p [tm2/m]	thet-y [tm2/m]	thet-z [tm2/m]	thet-yz [tm2/m]
	5.386		47.8	45.0	52.0	0.0	0.238	0.207	0.031	

Cross section No. 355.2 = CS 10 - prefab. slab C1

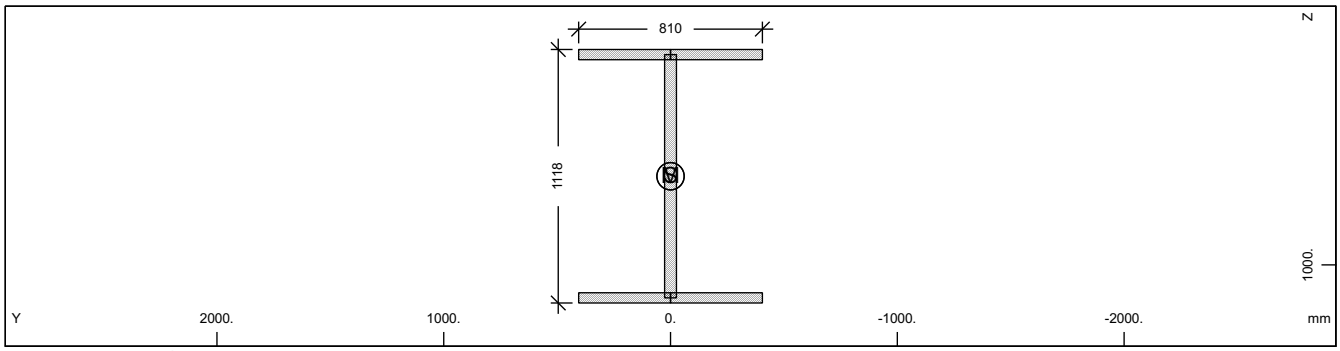

Cross section No. 355

Static properties of cross section

Mat NoR	A[cm2] It[cm4]	Ay/Az/Ayz [cm2]	Iy/Iz/Iyz [cm4]	ys/zs [mm]	modules [N/mm2]	gam [kN/m]
1	1286.96	607.50	2633627.3	0.0	210000	10.10
	6270.0	506.98	398580.9	609.0	80769	

Additional static properties of cross section

Alfa-T [1/°K]	ymin ymax [mm]	zmin zmax [mm]	hymin hzmin [mm]	AK AB [cm2]	MB	Tau-T Tau-B [1/m3]	Tau-Vy Tau-Vz [1/m2]
1.2E-05	-405.0	-559.0		7.359E+02		5.226E+02	2.058E+01
	405.0	559.0				1.255E+02	1.974E+01

Section values for warping

Wmin[cm2]	Wmax[cm2]	CM[cm6]	CMS[cm4]	ASwyy[cm6]	ASwzz[cm6]	ry[mm]	rz[mm]
-2172.83	2172.831147244363.		1748581.4	-0.16	-1.04	0.0	0.0

Design values of cross section

Mat NoR	A[cm2] It[cm4]	Ay/Az/Ayz [cm2]	Iy/Iz/Iyz [cm4]	ys/zs [mm]	modules [N/mm2]	gam [kN/m]
1	1286.96	607.50	2633627.3	0.0	182609	10.10
	6270.0	506.98	398580.9	609.0	70234	

Design forces and moments
(C/E = characteristic plastic/elastic, D=plast.Design, F=elast. Design)

	N[kN]	Vy[kN]	Vz[kN]	Mt[kNm]	My[kNm]	Mz[kNm]	y[mm]	z[mm]	BUCK
C	43113.2	14099.76	10791.64	597.83	18116.18	5188.35	0.0	609.0	c d
C	0.0				0.00	0.00	0.0	0.0	COMB
E	43113.2	9399.84	9796.03	370.08	15782.92	3296.90	0.0	609.0	
D	37489.7	12260.66	9384.03	519.85	15753.20	4511.61	0.0	609.0	
D	0.0				0.00	0.00	0.0	0.0	COMB
F	37489.7	8173.78	8518.29	321.81	13724.27	2866.87	0.0	609.0	

Additional Design Data

M	periphery-O/-I [m2/m]	[m2/m]	deff [mm]	t-min [mm]	t-max [mm]	SMP [o/o]	thet-p [tm2/m]	thet-y [tm2/m]	thet-z [tm2/m]	thet-yz [tm2/m]
	5.386		47.8	45.0	52.0	0.0	0.238	0.207	0.031	

SOFiSTiK AG - www.sofistik.de

Composite bridge 38+50+38, b=14.25m, 2x2HL1100R HISTAR460 , slab 0.30m C30/37

Cross section No. 355.3 = CS 20 - in-situ conc:C2

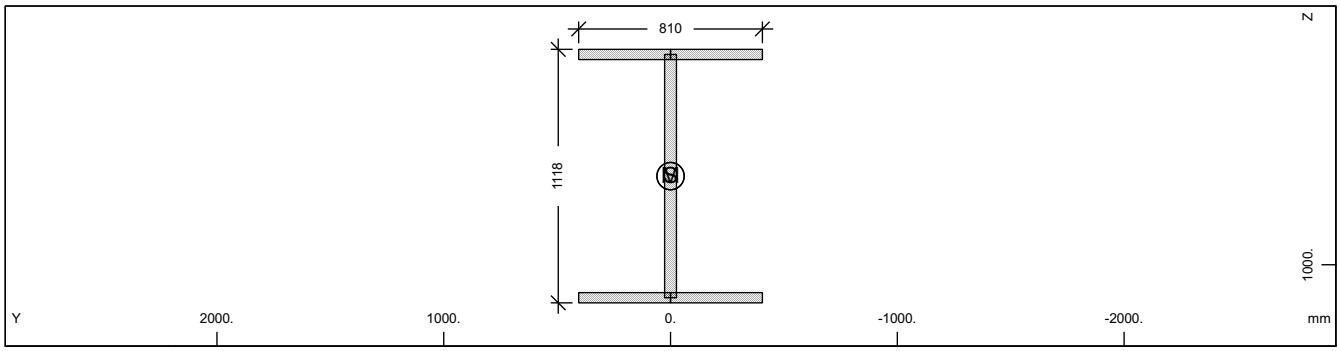

Cross section No. 355

Static properties of cross section

Mat NoR	A[cm2] It[cm4]	Ay/Az/Ayz [cm2]	Iy/Iz/Iyz [cm4]	ys/zs [mm]	modules [N/mm2]	gam [kN/m]
1	1286.96	607.50	2633627.3	0.0	210000	10.10
	6270.0	506.98	398580.9	609.0	80769	

Additional static properties of cross section

Alfa-T [1/°K]	ymin ymax [mm]	zmin zmax [mm]	hymin hzmin [mm]	AK AB [cm2]	MB	Tau-T Tau-B [1/m3]	Tau-Vy Tau-Vz [1/m2]
1.2E-05	-405.0	-559.0		7.359E+02		5.226E+02	2.058E+01
	405.0	559.0				1.255E+02	1.974E+01

Section values for warping

Wmin[cm2]	Wmax[cm2]	CM[cm6]	CMS[cm4]	ASwyy[cm6]	ASwzz[cm6]	ry[mm]	rz[mm]
-2172.83	2172.831	147244363.	1748581.4	-0.16	-1.04	0.0	0.0

Design values of cross section

Mat NoR	A[cm2] It[cm4]	Ay/Az/Ayz [cm2]	Iy/Iz/Iyz [cm4]	ys/zs [mm]	modules [N/mm2]	gam [kN/m]
1	1286.96	607.50	2633627.3	0.0	182609	10.10
	6270.0	506.98	398580.9	609.0	70234	

Design forces and moments
(C/E = characteristic plastic/elastic, D=plast.Design, F=elast. Design)

	N[kN]	Vy[kN]	Vz[kN]	Mt[kNm]	My[kNm]	Mz[kNm]	y[mm]	z[mm]	BUCK
C	43113.2	14099.76	10791.64	597.83	18116.18	5188.35	0.0	609.0	c d
C	0.0				0.00	0.00	0.0	0.0	COMB
E	43113.2	9399.84	9796.03	370.08	15782.92	3296.90	0.0	609.0	
D	37489.7	12260.66	9384.03	519.85	15753.20	4511.61	0.0	609.0	
D	0.0				0.00	0.00	0.0	0.0	COMB
F	37489.7	8173.78	8518.29	321.81	13724.27	2866.87	0.0	609.0	

Additional Design Data

M	periphery-O/-I [m2/m] [m2/m]	deff [mm]	t-min [mm]	t-max [mm]	SMP [o/o]	thet-p [tm2/m]	thet-y [tm2/m]	thet-z [tm2/m]	thet-yz [tm2/m]
	5.386	47.8	45.0	52.0	0.0	0.238	0.207	0.031	

SOFiSTiK AG - www.sofistik.de

Composite bridge 38+50+38, b=14.25m, 2x2HL1100R HISTAR460 , slab 0.30m C30/37

Cross section No. 355.4 = CS 21 - reinf active:C2

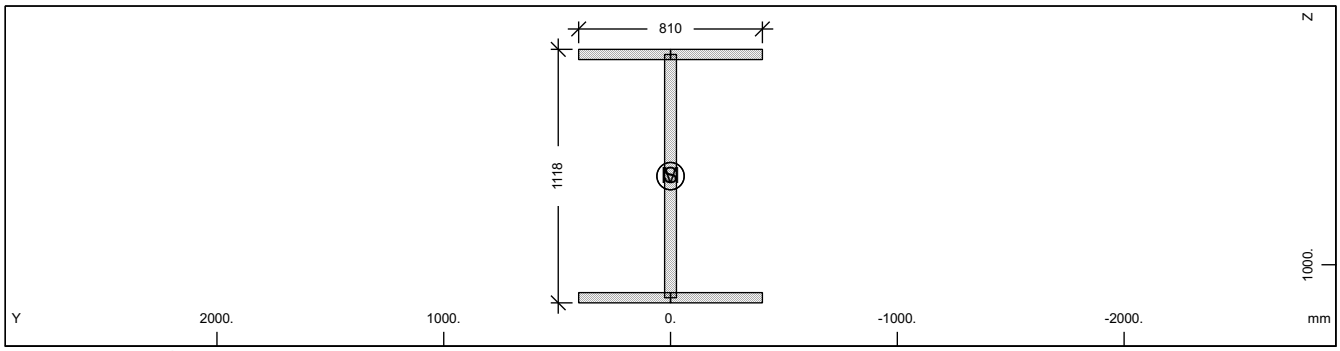

Cross section No. 355

Static properties of cross section

Mat / NoR	A[cm2] / It[cm4]	Ay/Az/Ayz [cm2]	Iy/Iz/Iyz [cm4]	ys/zs [mm]	modules [N/mm2]	gam [kN/m]
1	1286.96	607.50	2633627.3	0.0	210000	10.10
	6270.0	506.98	398580.9	609.0	80769	

Additional static properties of cross section

Alfa-T [1/°K]	ymin / ymax [mm]	zmin / zmax [mm]	hymin / hzmin [mm]	AK / AB [cm2]	MB	Tau-T / Tau-B [1/m3]	Tau-Vy / Tau-Vz [1/m2]
1.2E-05	-405.0	-559.0		7.359E+02		5.226E+02	2.058E+01
	405.0	559.0				1.255E+02	1.974E+01

Section values for warping

Wmin[cm2]	Wmax[cm2]	CM[cm6]	CMS[cm4]	ASwyy[cm6]	ASwzz[cm6]	ry[mm]	rz[mm]
-2172.83	2172.831147244363.		1748581.4	-0.16	-1.04	0.0	0.0

Design values of cross section

Mat / NoR	A[cm2] / It[cm4]	Ay/Az/Ayz [cm2]	Iy/Iz/Iyz [cm4]	ys/zs [mm]	modules [N/mm2]	gam [kN/m]
1	1286.96	607.50	2633627.3	0.0	182609	10.10
	6270.0	506.98	398580.9	609.0	70234	

Design forces and moments
(C/E = characteristic plastic/elastic, D=plast.Design, F=elast. Design)

	N[kN]	Vy[kN]	Vz[kN]	Mt[kNm]	My[kNm]	Mz[kNm]	y[mm]	z[mm]	BUCK
C	43113.2	14099.76	10791.64	597.83	18116.18	5188.35	0.0	609.0	c d
C	0.0				0.00	0.00	0.0	0.0	COMB
E	43113.2	9399.84	9796.03	370.08	15782.92	3296.90	0.0	609.0	
D	37489.7	12260.66	9384.03	519.85	15753.20	4511.61	0.0	609.0	
D	0.0				0.00	0.00	0.0	0.0	COMB
F	37489.7	8173.78	8518.29	321.81	13724.27	2866.87	0.0	609.0	

Additional Design Data

M	periphery-O/-I [m2/m]	[m2/m]	deff [mm]	t-min [mm]	t-max [mm]	SMP [o/o]	thet-p [tm2/m]	thet-y [tm2/m]	thet-z [tm2/m]	thet-yz [tm2/m]
	5.386		47.8	45.0	52.0	0.0	0.238	0.207	0.031	

SOFiSTiK AG - www.sofistik.de

Composite bridge 38+50+38, b=14.25m, 2x2HL1100R HISTAR460 , slab 0.30m C30/37

Cross section No. 355.5 = CS 30 - in-situ conc:C3

Cross section No. 356 - VFT (351)

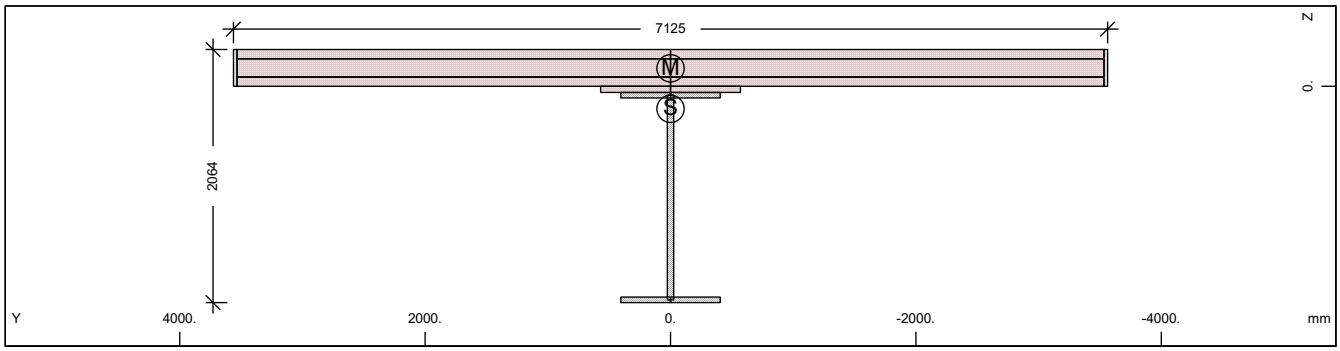

Cross section No. 356 - VFT (351)

Static properties of cross section

Mat NoR	A[cm2] It[cm4]	Ay/Az/Ayz [cm2]	Iy/Iz/Iyz [cm4]	ys/zs [mm]	y/z-sc [mm]	modules [N/mm2]	gam [kN/m]
1	5101.96	3097.68	19270058.	0.0	0.0	210000	67.40
	6270.0	761.33	142636288.	183.8	-146.9	80769	

Additional static properties of cross section

Alfa-T [1/°K]	ymin ymax [mm]	zmin zmax [mm]	hymin hzmin [mm]	AK AB [cm2]	MB	Tau-T Tau-B [1/m3]	Tau-Vy Tau-Vz [1/m2]
1.2E-05	-3562.5	-483.8		1.431E+04		4.767E+00	4.167E+00
	3562.5	1579.9		2.195E+04		1.255E+02	1.196E+01

Section values for warping

Wmin[cm2]	Wmax[cm2]	CM[cm6]	CMS[cm4]	ASwyy[cm6]	ASwzz[cm6]	ry[mm]	rz[mm]
-7646.83	7646.83	7479889348.	3246883.7	5556.83	750.72	0.0	-742.0

Partial cross sections

Mat NoR	A[cm2] It[cm4]	Ay/Az/Ayz [cm2]	Iy/Iz/Iyz [cm4]	ys/zs [mm]	modules [N/mm2]	gam [kN/m]
1	1596.71	0.12	7088169.5	0.0	210000	12.53
	12741.7	528.40	398580.9	906.8	80769	
30	21768.50	17699.28	169991.7	0.0	32837	54.42
	6364299.4	1329.49	882663541.	-145.4	13682	
31	176.51	0.03	0.0	0.0	0	0.44
	52952.0	0.00	22216693.	-150.0	0	
300	106.50	104.36	5990.7	0.0	200000	0.00
	0.2	8.11	4431400.1	-150.0	76923	

Design values of cross section

Mat NoR	A[cm2] It[cm4]	Ay/Az/Ayz [cm2]	Iy/Iz/Iyz [cm4]	ys/zs [mm]	modules [N/mm2]	gam [kN/m]
1	4307.74	2398.11	18244293.	0.0	182609	67.40
	6270.0	708.79	110432244.	244.5	70234	

Design forces and moments
(C/E = characteristic plastic/elastic, D=plast.Design, F=elast. Design)

	N[kN]	Vy[kN]	Vz[kN]	Mt[kNm]	My[kNm]	Mz[kNm]	y[mm]	z[mm]	BUCK
C	58814.9	53383.44	45583.08	99321.78	58328.36	71604.87	53.2	-74.6	c d
C	-45969.6				65063.41	0.00	0.0	183.8	COMB
C	-32917.5				0.00	72085.20	0.0	0.0	COMB
C	-124650.	53383.44	45583.08	99321.79	-37723.0	-71604.9	-53.2	753.9	
C	-19865.4				-43386.6	0.00	0.0	183.8	COMB
C	-32917.5				0.00	-72085.2	0.0	0.0	COMB
E	170915.8	24115.59	16173.97	3541.74	40860.71	77456.71	0.0	183.8	
E	-97885.9	24115.59	16173.97	3541.74	-40860.7	-77456.7	0.0	183.8	
D	51143.4	39073.58	34330.11	66381.16	49284.17	50812.42	21.2	-6.1	

SOFiSTiK AG - www.sofistik.de

Composite bridge 38+50+38, b=14.25m, 2x2HL1100R HISTAR460 , slab 0.30m C30/37

Design forces and moments
(C/E = characteristic plastic/elastic, D=plast.Design, F=elast. Design)

	N[kN]	Vy[kN]	Vz[kN]	Mt[kNm]	My[kNm]	Mz[kNm]	y[mm]	z[mm]	BUCK
D	-26615.7				52178.68	0.00	0.0	183.8	COMB
D	-21945.0				0.00	51045.54	0.0	0.0	COMB
D	-95033.4	39073.58	34330.11	66381.17	-32802.6	-50812.4	-21.2	753.7	
D	-17274.3				-37727.4	0.00	0.0	183.8	COMB
D	-21945.0				0.00	-51045.5	0.0	0.0	COMB
F	148622.5	16077.06	11494.49	2361.16	35531.05	51637.81	0.0	183.8	
F	-65257.3	16077.06	11494.49	2361.16	-35531.1	-51637.8	0.0	183.8	

Additional Design Data

M	periphery-O/-I [m2/m]	[m2/m]	deff [mm]	t-min [mm]	t-max [mm]	SMP [o/o]	thet-p [tm2/m]	thet-y [tm2/m]	thet-z [tm2/m]	thet-yz [tm2/m]
	51.372		19.9	0.8	300.0	0.0	24.344	1.690	22.653	
1	6.577		48.6	45.0	52.0	0.0	0.588	0.556	0.031	
30	16.412		600.0	50.0	300.0	0.0	22.071	0.004	22.067	
31	0.118		300.0	300.0	300.0	0.0	0.555		0.555	
**	28.265		0.8	0.8	0.8	0.0	0.000	0.000	0.000	

Cross section No. 356.1 = CS 1 - steel alone

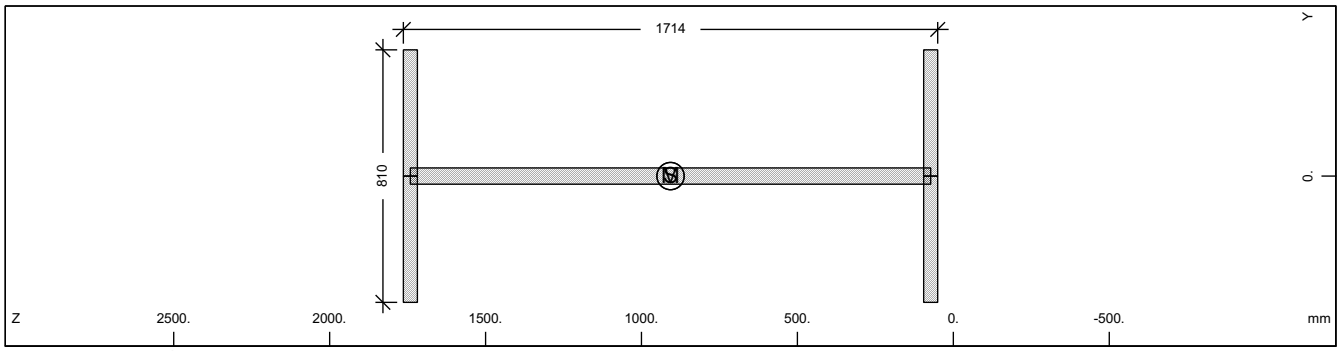

Cross section No. 356

Static properties of cross section

Mat NoR	A[cm2] It[cm4]	Ay/Az/Ayz [cm2]	Iy/Iz/Iyz [cm4]	ys/zs [mm]	modules [N/mm2]	gam [kN/m]
1	1596.71	607.50	7088169.5	0.0	210000	12.53
	6270.0	815.48	398580.9	906.8	80769	

Additional static properties of cross section

Alfa-T [1/°K]	ymin ymax [mm]	zmin zmax [mm]	hymin hzmin [mm]	AK AB [cm2]	MB	Tau-T Tau-B [1/m3]	Tau-Vy Tau-Vz [1/m2]
1.2E-05	-405.0	-856.8		9.424E+02		4.081E+02	2.058E+01
	405.0	856.8				1.255E+02	1.316E+01

Section values for warping

Wmin[cm2]	Wmax[cm2]	CM[cm6]	CMS[cm4]	ASwyy[cm6]	ASwzz[cm6]	ry[mm]	rz[mm]
-3379.07	3379.072774606703.		4228938.0	-0.65	-11.63	0.0	0.0

Design values of cross section

Mat NoR	A[cm2] It[cm4]	Ay/Az/Ayz [cm2]	Iy/Iz/Iyz [cm4]	ys/zs [mm]	modules [N/mm2]	gam [kN/m]
1	1596.71	607.50	7088169.5	0.0	182609	12.53
	6270.0	815.48	398580.9	906.8	70234	

Design forces and moments
(C/E = characteristic plastic/elastic, D=plast.Design, F=elast. Design)

	N[kN]	Vy[kN]	Vz[kN]	Mt[kNm]	My[kNm]	Mz[kNm]	y[mm]	z[mm]	BUCK
C	53489.9	14099.76	16782.63	753.59	32502.25	5323.24	0.0	906.8	c d
C	0.0				0.00	0.00	0.0	0.0	COMB
E	53489.9	9399.84	14695.46	473.92	27712.76	3296.90	0.0	906.8	
D	46512.9	12260.66	14593.59	655.30	28262.82	4628.91	0.0	906.8	

SOFiSTiK AG - www.sofistik.de

Composite bridge 38+50+38, b=14.25m, 2x2HL1100R HISTAR460 , slab 0.30m C30/37

Design forces and moments
(C/E = characteristic plastic/elastic, D=plast.Design, F=elast. Design)

	N[kN]	Vy[kN]	Vz[kN]	Mt[kNm]	My[kNm]	Mz[kNm]	y[mm]	z[mm]	BUCK
D	0.0				0.00	0.00	0.0	0.0	COMB
F	46512.9	8173.78	12778.66	412.11	24098.05	2866.87	0.0	906.8	

Additional Design Data

M	periphery-O/-I [m2/m]	[m2/m]	deff [mm]	t-min [mm]	t-max [mm]	SMP [o/o]	thet-p [tm2/m]	thet-y [tm2/m]	thet-z [tm2/m]	thet-yz [tm2/m]
	6.577		48.6	45.0	52.0	0.0	0.588	0.556	0.031	

Cross section No. 356.2 = CS 10 - prefab. slab C1

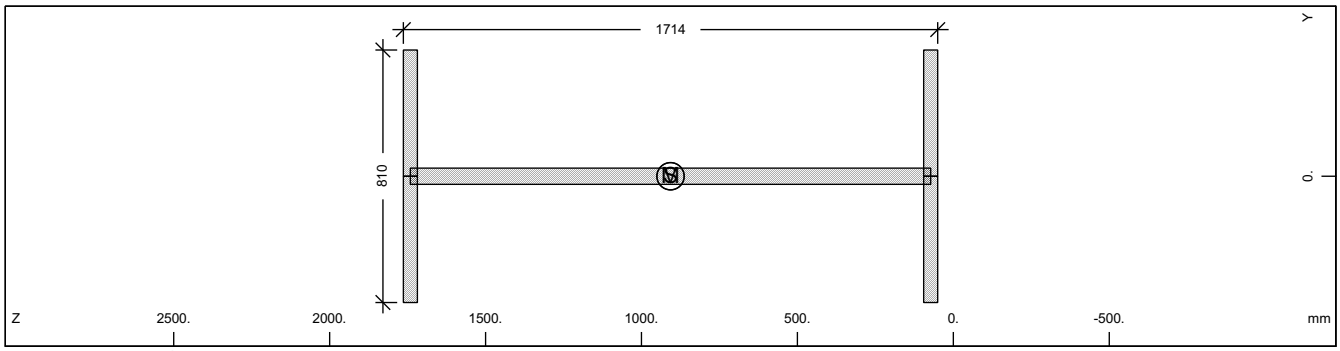

Cross section No. 356

Static properties of cross section

Mat NoR	A[cm2] It[cm4]	Ay/Az/Ayz [cm2]	Iy/Iz/Iyz [cm4]	ys/zs [mm]	modules [N/mm2]	gam [kN/m]
1	1596.71	607.50	7088169.5	0.0	210000	12.53
	6270.0	815.48	398580.9	906.8	80769	

Additional static properties of cross section

Alfa-T [1/°K]	ymin ymax [mm]	zmin zmax [mm]	hymin hzmin [mm]	AK AB [cm2]	MB	Tau-T Tau-B [1/m3]	Tau-Vy Tau-Vz [1/m2]
1.2E-05	-405.0	-856.8		9.424E+02		4.081E+02	2.058E+01
	405.0	856.8				1.255E+02	1.316E+01

Section values for warping

Wmin[cm2]	Wmax[cm2]	CM[cm6]	CMS[cm4]	ASwyy[cm6]	ASwzz[cm6]	ry[mm]	rz[mm]
-3379.07	3379.072774606703.		4228938.0	-0.65	-11.63	0.0	0.0

Design values of cross section

Mat NoR	A[cm2] It[cm4]	Ay/Az/Ayz [cm2]	Iy/Iz/Iyz [cm4]	ys/zs [mm]	modules [N/mm2]	gam [kN/m]
1	1596.71	607.50	7088169.5	0.0	182609	12.53
	6270.0	815.48	398580.9	906.8	70234	

Design forces and moments
(C/E = characteristic plastic/elastic, D=plast.Design, F=elast. Design)

	N[kN]	Vy[kN]	Vz[kN]	Mt[kNm]	My[kNm]	Mz[kNm]	y[mm]	z[mm]	BUCK
C	53489.9	14099.76	16782.63	753.59	32502.25	5323.24	0.0	906.8	c d
C	0.0				0.00	0.00	0.0	0.0	COMB
E	53489.9	9399.84	14695.46	473.92	27712.76	3296.90	0.0	906.8	
D	46512.9	12260.66	14593.59	655.30	28262.82	4628.91	0.0	906.8	
D	0.0				0.00	0.00	0.0	0.0	COMB
F	46512.9	8173.78	12778.66	412.11	24098.05	2866.87	0.0	906.8	

Additional Design Data

M	periphery-O/-I [m2/m]	[m2/m]	deff [mm]	t-min [mm]	t-max [mm]	SMP [o/o]	thet-p [tm2/m]	thet-y [tm2/m]	thet-z [tm2/m]	thet-yz [tm2/m]
	6.577		48.6	45.0	52.0	0.0	0.588	0.556	0.031	

SOFiSTiK AG - www.sofistik.de

Composite bridge 38+50+38, b=14.25m, 2x2HL1100R HISTAR460 , slab 0.30m C30/37

Cross section No. 356.3 = CS 20 - in-situ conc:C2

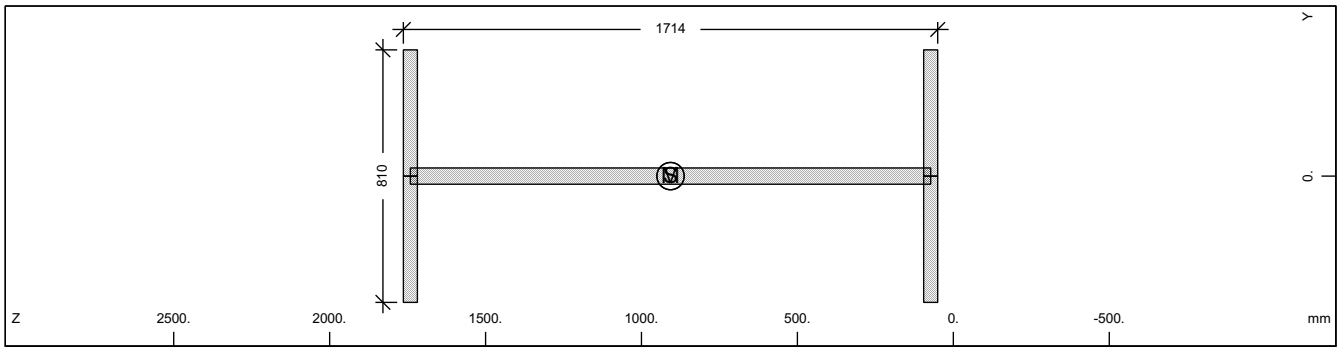

Cross section No. 356

Static properties of cross section

Mat NoR	A[cm2] It[cm4]	Ay/Az/Ayz [cm2]	Iy/Iz/Iyz [cm4]	ys/zs [mm]	modules [N/mm2]	gam [kN/m]
1	1596.71	607.50	7088169.5	0.0	210000	12.53
	6270.0	815.48	398580.9	906.8	80769	

Additional static properties of cross section

Alfa-T [1/°K]	ymin ymax [mm]	zmin zmax [mm]	hymin hzmin [mm]	AK AB [cm2]	MB	Tau-T Tau-B [1/m3]	Tau-Vy Tau-Vz [1/m2]
1.2E-05	-405.0	-856.8		9.424E+02		4.081E+02	2.058E+01
	405.0	856.8				1.255E+02	1.316E+01

Section values for warping

Wmin[cm2]	Wmax[cm2]	CM[cm6]	CMS[cm4]	ASwyy[cm6]	ASwzz[cm6]	ry[mm]	rz[mm]
-3379.07	3379.072774606703.		4228938.0	-0.65	-11.63	0.0	0.0

Design values of cross section

Mat NoR	A[cm2] It[cm4]	Ay/Az/Ayz [cm2]	Iy/Iz/Iyz [cm4]	ys/zs [mm]	modules [N/mm2]	gam [kN/m]
1	1596.71	607.50	7088169.5	0.0	182609	12.53
	6270.0	815.48	398580.9	906.8	70234	

Design forces and moments
(C/E = characteristic plastic/elastic, D=plast.Design, F=elast. Design)

	N[kN]	Vy[kN]	Vz[kN]	Mt[kNm]	My[kNm]	Mz[kNm]	y[mm]	z[mm]	BUCK
C	53489.9	14099.76	16782.63	753.59	32502.25	5323.24	0.0	906.8	c d
C	0.0				0.00	0.00	0.0	0.0	COMB
E	53489.9	9399.84	14695.46	473.92	27712.76	3296.90	0.0	906.8	
D	46512.9	12260.66	14593.59	655.30	28262.82	4628.91	0.0	906.8	
D	0.0				0.00	0.00	0.0	0.0	COMB
F	46512.9	8173.78	12778.66	412.11	24098.05	2866.87	0.0	906.8	

Additional Design Data

M	periphery-O/-I [m2/m] [m2/m]	deff [mm]	t-min [mm]	t-max [mm]	SMP [o/o]	thet-p [tm2/m]	thet-y [tm2/m]	thet-z [tm2/m]	thet-yz [tm2/m]
	6.577	48.6	45.0	52.0	0.0	0.588	0.556	0.031	

SOFiSTiK AG - www.sofistik.de

Composite bridge 38+50+38, b=14.25m, 2x2HL1100R HISTAR460 , slab 0.30m C30/37

Cross section No. 356.4 = CS 21 - reinf active:C2

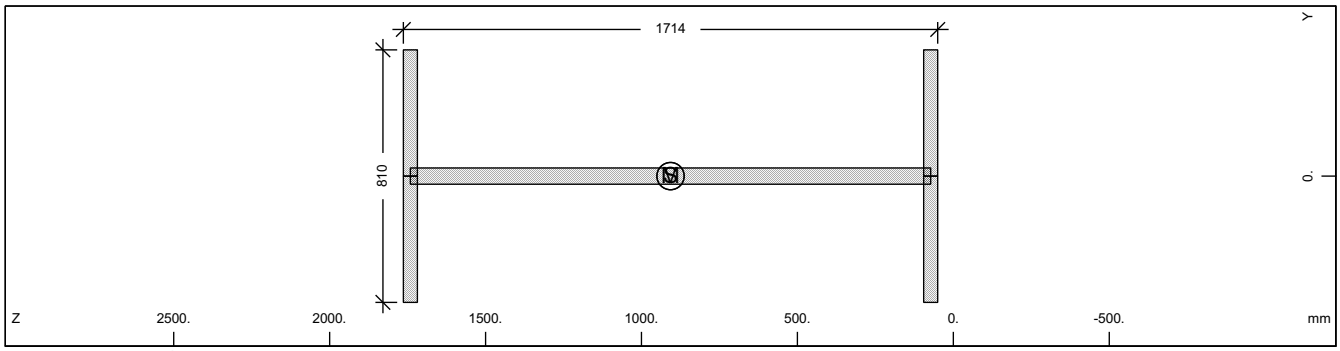

Cross section No. 356

Static properties of cross section

Mat NoR	A[cm2] It[cm4]	Ay/Az/Ayz [cm2]	Iy/Iz/Iyz [cm4]	ys/zs [mm]	modules [N/mm2]	gam [kN/m]
1	1596.71	607.50	7088169.5	0.0	210000	12.53
	6270.0	815.48	398580.9	906.8	80769	

Additional static properties of cross section

Alfa-T [1/°K]	ymin ymax [mm]	zmin zmax [mm]	hymin hzmin [mm]	AK AB [cm2]	MB	Tau-T Tau-B [1/m3]	Tau-Vy Tau-Vz [1/m2]
1.2E-05	-405.0	-856.8		9.424E+02		4.081E+02	2.058E+01
	405.0	856.8				1.255E+02	1.316E+01

Section values for warping

Wmin[cm2]	Wmax[cm2]	CM[cm6]	CMS[cm4]	ASwyy[cm6]	ASwzz[cm6]	ry[mm]	rz[mm]
-3379.07	3379.072774606703.		4228938.0	-0.65	-11.63	0.0	0.0

Design values of cross section

Mat NoR	A[cm2] It[cm4]	Ay/Az/Ayz [cm2]	Iy/Iz/Iyz [cm4]	ys/zs [mm]	modules [N/mm2]	gam [kN/m]
1	1596.71	607.50	7088169.5	0.0	182609	12.53
	6270.0	815.48	398580.9	906.8	70234	

Design forces and moments
(C/E = characteristic plastic/elastic, D=plast.Design, F=elast. Design)

	N[kN]	Vy[kN]	Vz[kN]	Mt[kNm]	My[kNm]	Mz[kNm]	y[mm]	z[mm]	BUCK
C	53489.9	14099.76	16782.63	753.59	32502.25	5323.24	0.0	906.8	c d
C	0.0				0.00	0.00	0.0	0.0	COMB
E	53489.9	9399.84	14695.46	473.92	27712.76	3296.90	0.0	906.8	
D	46512.9	12260.66	14593.59	655.30	28262.82	4628.91	0.0	906.8	
D	0.0				0.00	0.00	0.0	0.0	COMB
F	46512.9	8173.78	12778.66	412.11	24098.05	2866.87	0.0	906.8	

Additional Design Data

M	periphery-O/-I [m2/m] [m2/m]	deff [mm]	t-min [mm]	t-max [mm]	SMP [o/o]	thet-p [tm2/m]	thet-y [tm2/m]	thet-z [tm2/m]	thet-yz [tm2/m]
	6.577	48.6	45.0	52.0	0.0	0.588	0.556	0.031	

SOFiSTiK AG - www.sofistik.de

Composite bridge 38+50+38, b=14.25m, 2x2HL1100R HISTAR460 , slab 0.30m C30/37

Cross section No. 356.5 = CS 30 - in-situ conc:C3

Cross section No. 357 - VFT (351)

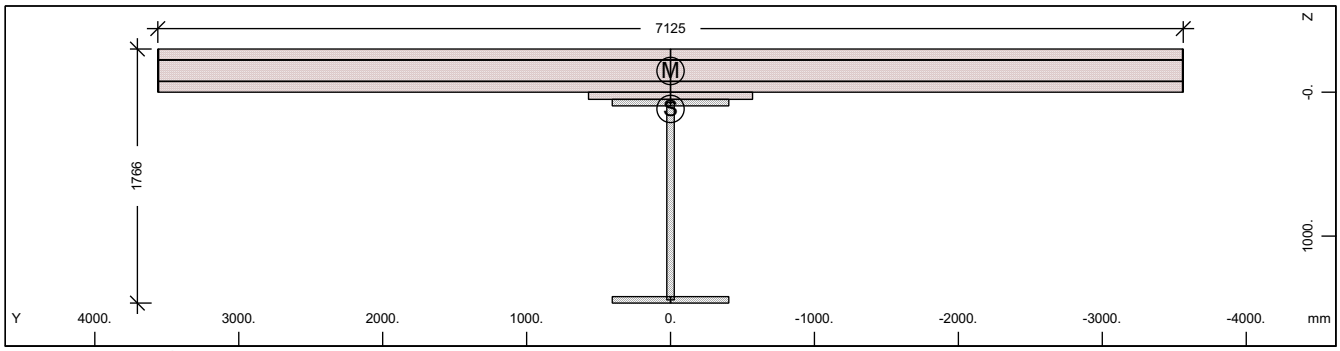

Cross section No. 357 - VFT (351)

Static properties of cross section

Mat NoR	A[cm2] It[cm4]	Ay/Az/Ayz [cm2]	Iy/Iz/Iyz [cm4]	ys/zs [mm]	y/z-sc [mm]	modules [N/mm2]	gam [kN/m]
1	4970.71	3118.65	12929648.	0.0	0.0	210000	66.18
	6270.0	615.30	145603753.	116.5	-147.4	80769	

Additional static properties of cross section

Alfa-T [1/°K]	ymin ymax [mm]	zmin zmax [mm]	hymin hzmin [mm]	AK AB [cm2]	MB	Tau-T Tau-B [1/m3]	Tau-Vy Tau-Vz [1/m2]
1.2E-05	-3562.5	-416.5		1.439E+04		4.741E+00	4.139E+00
	3562.5	1349.4		2.195E+04		1.255E+02	1.400E+01

Section values for warping

Wmin[cm2]	Wmax[cm2]	CM[cm6]	CMS[cm4]	ASwyy[cm6]	ASwzz[cm6]	ry[mm]	rz[mm]
-6442.56	6442.56	5420278314.	1820843.3	194.03	17.23	0.0	-1524.6

Partial cross sections

Mat NoR	A[cm2] It[cm4]	Ay/Az/Ayz [cm2]	Iy/Iz/Iyz [cm4]	ys/zs [mm]	modules [N/mm2]	gam [kN/m]
1	1441.85	0.12	4541274.9	0.0	210000	11.32
	11345.9	395.24	398580.9	757.9	80769	
30	21915.00	17819.13	170022.2	0.0	32837	54.79
	6408250.4	1254.85	901077848.	-145.4	13682	
31	30.00	0.00	0.0	0.0	0	0.08
	9000.6	0.00	3802349.1	-150.0	0	
300	107.24	105.06	6032.1	0.0	200000	0.00
	0.2	7.87	4523914.0	-150.0	76923	

Design values of cross section

Mat NoR	A[cm2] It[cm4]	Ay/Az/Ayz [cm2]	Iy/Iz/Iyz [cm4]	ys/zs [mm]	modules [N/mm2]	gam [kN/m]
1	4171.14	2414.34	12269639.	0.0	182609	66.18
	6270.0	565.70	112727857.	166.7	70234	

Design forces and moments
(C/E = characteristic plastic/elastic, D=plast.Design, F=elast. Design)

	N[kN]	Vy[kN]	Vz[kN]	Mt[kNm]	My[kNm]	Mz[kNm]	y[mm]	z[mm]	BUCK
C	53663.7	53404.68	42587.76	99243.91	46044.74	71273.03	125.0	-75.3	c d
C	-48849.5				50765.12	0.00	0.0	116.5	COMB
C	-32917.5				0.00	72148.23	0.0	0.0	COMB
C	-119499.	53404.68	42587.76	99243.91	-29378.9	-71273.0	-125.	603.8	
C	-16985.5				-33519.4	0.00	0.0	116.5	COMB
C	-32917.5				0.00	-72148.2	0.0	0.0	COMB
E	166518.7	24280.53	13813.63	3561.38	32099.96	78525.45	0.0	116.5	
E	-95367.6	24280.53	13813.63	3561.38	-32100.0	-78525.5	0.0	116.5	
D	46664.1	39092.05	31725.49	66313.45	38843.34	50820.16	25.5	-38.0	

SOFiSTiK AG - www.sofistik.de

Composite bridge 38+50+38, b=14.25m, 2x2HL1100R HISTAR460 , slab 0.30m C30/37

Design forces and moments
(C/E = characteristic plastic/elastic, D=plast.Design, F=elast. Design)

	N[kN]	Vy[kN]	Vz[kN]	Mt[kNm]	My[kNm]	Mz[kNm]	y[mm]	z[mm]	BUCK
D	-29120.0				40644.45	0.00	0.0	116.5	COMB
D	-21945.0				0.00	51100.34	0.0	0.0	COMB
D	-90554.1	39092.05	31725.48	66313.44	-25546.9	-50820.2	-25.5	603.4	
D	-14770.0				-29147.3	0.00	0.0	116.5	COMB
D	-21945.0				0.00	-51100.3	0.0	0.0	COMB
F	144798.8	16187.02	9594.00	2374.25	27913.01	52350.30	0.0	116.5	
F	-63578.4	16187.02	9594.00	2374.25	-27913.0	-52350.3	0.0	116.5	

Additional Design Data

M	periphery-O/-I [m2/m]	[m2/m]	deff [mm]	t-min [mm]	t-max [mm]	SMP [o/o]	thet-p [tm2/m]	thet-y [tm2/m]	thet-z [tm2/m]	thet-yz [tm2/m]
	50.972		19.5	0.8	300.0	0.0	23.780	1.126	22.653	
1	5.982		48.2	45.0	52.0	0.0	0.388	0.356	0.031	
30	16.510		600.0	50.0	300.0	0.0	22.531	0.004	22.527	
31	0.020		300.0	300.0	300.0	0.0	0.095		0.095	
**	28.460		0.8	0.8	0.8	0.0	0.000	0.000	0.000	

Cross section No. 357.1 = CS 1 - steel alone

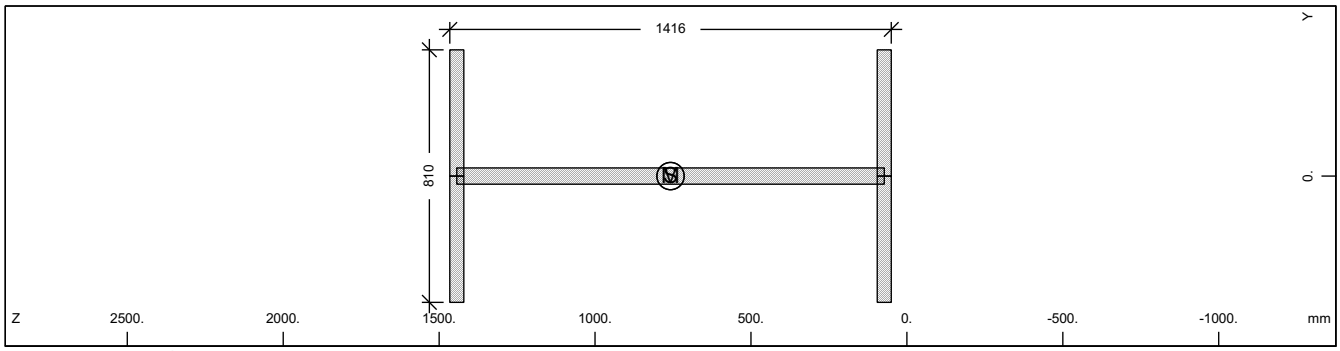

Cross section No. 357

Static properties of cross section

Mat NoR	A[cm2] It[cm4]	Ay/Az/Ayz [cm2]	Iy/Iz/Iyz [cm4]	ys/zs [mm]	modules [N/mm2]	gam [kN/m]
1	1441.85	607.50	4541274.9	0.0	210000	11.32
	6270.0	662.00	398580.9	757.9	80769	

Additional static properties of cross section

Alfa-T [1/°K]	ymin ymax [mm]	zmin zmax [mm]	hymin hzmin [mm]	AK AB [cm2]	MB	Tau-T Tau-B [1/m3]	Tau-Vy Tau-Vz [1/m2]
1.2E-05	-405.0	-707.9		8.392E+02		4.583E+02	2.058E+01
	405.0	707.9				1.255E+02	1.575E+01

Section values for warping

Wmin[cm2]	Wmax[cm2]	CM[cm6]	CMS[cm4]	ASwyy[cm6]	ASwzz[cm6]	ry[mm]	rz[mm]
-2775.99	2775.991872581088.	2854108.8		-3.09	-35.25	0.0	0.0

Design values of cross section

Mat NoR	A[cm2] It[cm4]	Ay/Az/Ayz [cm2]	Iy/Iz/Iyz [cm4]	ys/zs [mm]	modules [N/mm2]	gam [kN/m]
1	1441.85	607.50	4541274.9	0.0	182609	11.32
	6270.0	662.00	398580.9	757.9	70234	

Design forces and moments
(C/E = characteristic plastic/elastic, D=plast.Design, F=elast. Design)

	N[kN]	Vy[kN]	Vz[kN]	Mt[kNm]	My[kNm]	Mz[kNm]	y[mm]	z[mm]	BUCK
C	48301.8	14099.76	13787.31	675.71	24923.32	5255.80	0.0	757.9	c d
C	0.0				0.00	0.00	0.0	0.0	COMB
E	48301.8	9399.84	12278.19	422.01	21489.84	3296.90	0.0	757.9	
D	42001.6	12260.66	11988.97	587.58	21672.45	4570.26	0.0	757.9	

SOFiSTiK AG - www.sofistik.de

Composite bridge 38+50+38, b=14.25m, 2x2HL1100R HISTAR460 , slab 0.30m C30/37

Design forces and moments
(C/E = characteristic plastic/elastic, D=plast.Design, F=elast. Design)

	N[kN]	Vy[kN]	Vz[kN]	Mt[kNm]	My[kNm]	Mz[kNm]	y[mm]	z[mm]	BUCK
D	0.0				0.00	0.00	0.0	0.0	COMB
F	42001.6	8173.78	10676.68	366.96	18686.82	2866.87	0.0	757.9	

Additional Design Data

M	periphery-O/-I [m2/m]	[m2/m]	deff [mm]	t-min [mm]	t-max [mm]	SMP [o/o]	thet-p [tm2/m]	thet-y [tm2/m]	thet-z [tm2/m]	thet-yz [tm2/m]
	5.982		48.2	45.0	52.0	0.0	0.388	0.356	0.031	

Cross section No. 357.2 = CS 10 - prefab. slab C1

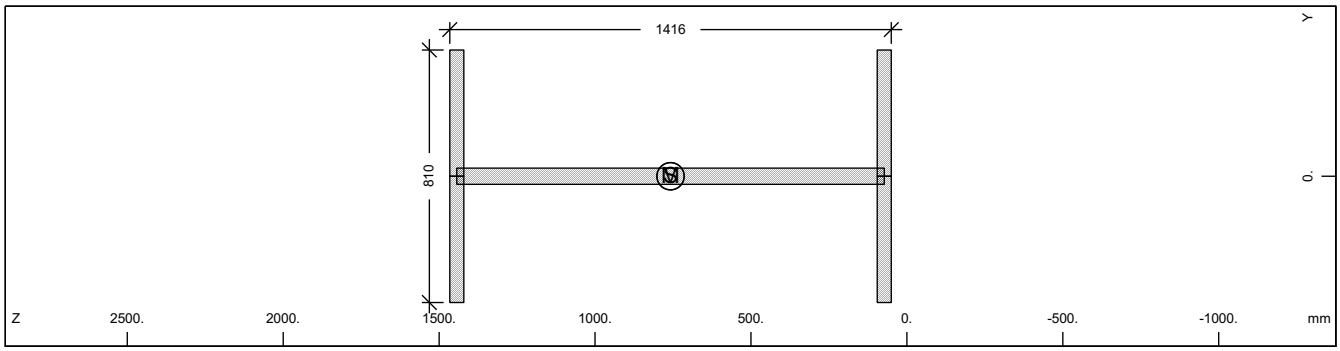

Cross section No. 357

Static properties of cross section

Mat NoR	A[cm2] It[cm4]	Ay/Az/Ayz [cm2]	Iy/Iz/Iyz [cm4]	ys/zs [mm]	modules [N/mm2]	gam [kN/m]
1	1441.85	607.50	4541274.9	0.0	210000	11.32
	6270.0	662.00	398580.9	757.9	80769	

Additional static properties of cross section

Alfa-T [1/°K]	ymin ymax [mm]	zmin zmax [mm]	hymin hzmin [mm]	AK AB [cm2]	MB	Tau-T Tau-B [1/m3]	Tau-Vy Tau-Vz [1/m2]
1.2E-05	-405.0	-707.9		8.392E+02		4.583E+02	2.058E+01
	405.0	707.9				1.255E+02	1.575E+01

Section values for warping

Wmin[cm2]	Wmax[cm2]	CM[cm6]	CMS[cm4]	ASwyy[cm6]	ASwzz[cm6]	ry[mm]	rz[mm]
-2775.99	2775.991872581088.		2854108.8	-3.09	-35.25	0.0	0.0

Design values of cross section

Mat NoR	A[cm2] It[cm4]	Ay/Az/Ayz [cm2]	Iy/Iz/Iyz [cm4]	ys/zs [mm]	modules [N/mm2]	gam [kN/m]
1	1441.85	607.50	4541274.9	0.0	182609	11.32
	6270.0	662.00	398580.9	757.9	70234	

Design forces and moments
(C/E = characteristic plastic/elastic, D=plast.Design, F=elast. Design)

	N[kN]	Vy[kN]	Vz[kN]	Mt[kNm]	My[kNm]	Mz[kNm]	y[mm]	z[mm]	BUCK
C	48301.8	14099.76	13787.31	675.71	24923.32	5255.80	0.0	757.9	c d
C	0.0				0.00	0.00	0.0	0.0	COMB
E	48301.8	9399.84	12278.19	422.01	21489.84	3296.90	0.0	757.9	
D	42001.6	12260.66	11988.97	587.58	21672.45	4570.26	0.0	757.9	
D	0.0				0.00	0.00	0.0	0.0	COMB
F	42001.6	8173.78	10676.68	366.96	18686.82	2866.87	0.0	757.9	

Additional Design Data

M	periphery-O/-I [m2/m]	[m2/m]	deff [mm]	t-min [mm]	t-max [mm]	SMP [o/o]	thet-p [tm2/m]	thet-y [tm2/m]	thet-z [tm2/m]	thet-yz [tm2/m]
	5.982		48.2	45.0	52.0	0.0	0.388	0.356	0.031	

SOFiSTiK AG - www.sofistik.de

Composite bridge 38+50+38, b=14.25m, 2x2HL1100R HISTAR460 , slab 0.30m C30/37

Cross section No. 357.3 = CS 20 - in-situ conc:C2

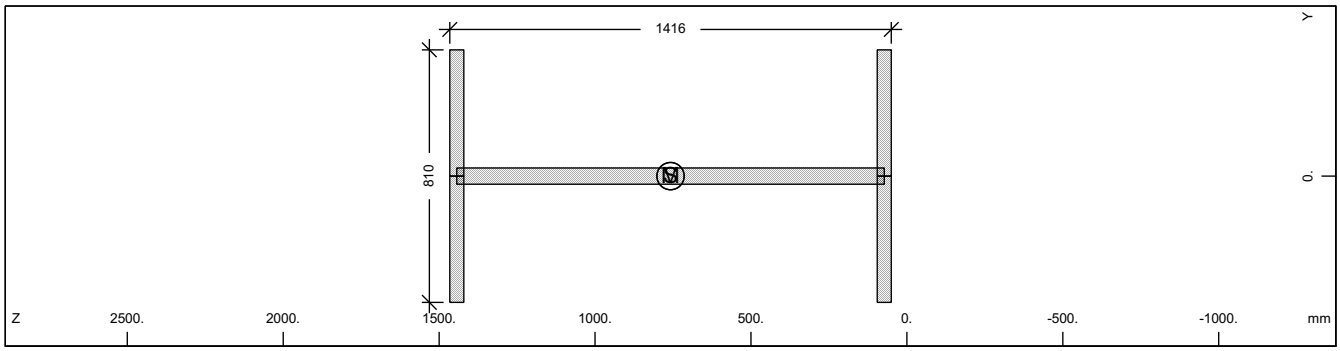

Cross section No. 357

Static properties of cross section

Mat NoR	A[cm2] It[cm4]	Ay/Az/Ayz [cm2]	Iy/Iz/Iyz [cm4]	ys/zs [mm]	modules [N/mm2]	gam [kN/m]
1	1441.85	607.50	4541274.9	0.0	210000	11.32
	6270.0	662.00	398580.9	757.9	80769	

Additional static properties of cross section

Alfa-T [1/°K]	ymin ymax [mm]	zmin zmax [mm]	hymin hzmin [mm]	AK AB [cm2]	MB	Tau-T Tau-B [1/m3]	Tau-Vy Tau-Vz [1/m2]
1.2E-05	-405.0	-707.9		8.392E+02		4.583E+02	2.058E+01
	405.0	707.9				1.255E+02	1.575E+01

Section values for warping

Wmin[cm2]	Wmax[cm2]	CM[cm6]	CMS[cm4]	ASwyy[cm6]	ASwzz[cm6]	ry[mm]	rz[mm]
-2775.99	2775.991872581088.		2854108.8	-3.09	-35.25	0.0	0.0

Design values of cross section

Mat NoR	A[cm2] It[cm4]	Ay/Az/Ayz [cm2]	Iy/Iz/Iyz [cm4]	ys/zs [mm]	modules [N/mm2]	gam [kN/m]
1	1441.85	607.50	4541274.9	0.0	182609	11.32
	6270.0	662.00	398580.9	757.9	70234	

Design forces and moments
(C/E = characteristic plastic/elastic, D=plast.Design, F=elast. Design)

	N[kN]	Vy[kN]	Vz[kN]	Mt[kNm]	My[kNm]	Mz[kNm]	y[mm]	z[mm]	BUCK
C	48301.8	14099.76	13787.31	675.71	24923.32	5255.80	0.0	757.9	c d
C	0.0				0.00	0.00	0.0	0.0	COMB
E	48301.8	9399.84	12278.19	422.01	21489.84	3296.90	0.0	757.9	
D	42001.6	12260.66	11988.97	587.58	21672.45	4570.26	0.0	757.9	
D	0.0				0.00	0.00	0.0	0.0	COMB
F	42001.6	8173.78	10676.68	366.96	18686.82	2866.87	0.0	757.9	

Additional Design Data

M	periphery-O/-I [m2/m]	[m2/m]	deff [mm]	t-min [mm]	t-max [mm]	SMP [o/o]	thet-p [tm2/m]	thet-y [tm2/m]	thet-z [tm2/m]	thet-yz [tm2/m]
	5.982		48.2	45.0	52.0	0.0	0.388	0.356	0.031	

SOFiSTiK AG - www.sofistik.de

Composite bridge 38+50+38, b=14.25m, 2x2HL1100R HISTAR460 , slab 0.30m C30/37

Cross section No. 357.4 = CS 21 - reinf active:C2

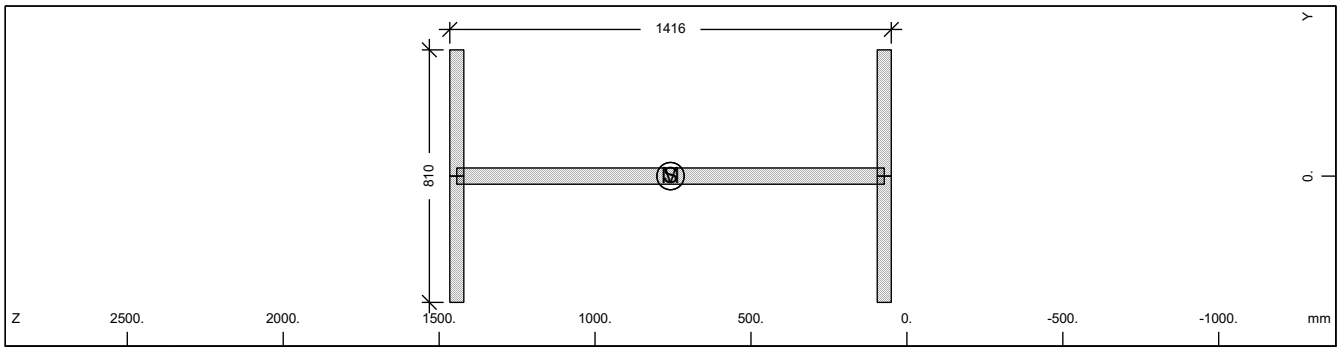

Cross section No. 357

Static properties of cross section

Mat NoR	A[cm2] It[cm4]	Ay/Az/Ayz [cm2]	Iy/Iz/Iyz [cm4]	ys/zs [mm]	modules [N/mm2]	gam [kN/m]
1	1441.85	607.50	4541274.9	0.0	210000	11.32
	6270.0	662.00	398580.9	757.9	80769	

Additional static properties of cross section

Alfa-T [1/°K]	ymin ymax [mm]	zmin zmax [mm]	hymin hzmin [mm]	AK AB [cm2]	MB	Tau-T Tau-B [1/m3]	Tau-Vy Tau-Vz [1/m2]
1.2E-05	-405.0	-707.9		8.392E+02		4.583E+02	2.058E+01
	405.0	707.9				1.255E+02	1.575E+01

Section values for warping

Wmin[cm2]	Wmax[cm2]	CM[cm6]	CMS[cm4]	ASwyy[cm6]	ASwzz[cm6]	ry[mm]	rz[mm]
-2775.99	2775.991872581088.		2854108.8	-3.09	-35.25	0.0	0.0

Design values of cross section

Mat NoR	A[cm2] It[cm4]	Ay/Az/Ayz [cm2]	Iy/Iz/Iyz [cm4]	ys/zs [mm]	modules [N/mm2]	gam [kN/m]
1	1441.85	607.50	4541274.9	0.0	182609	11.32
	6270.0	662.00	398580.9	757.9	70234	

Design forces and moments
(C/E = characteristic plastic/elastic, D=plast.Design, F=elast. Design)

	N[kN]	Vy[kN]	Vz[kN]	Mt[kNm]	My[kNm]	Mz[kNm]	y[mm]	z[mm]	BUCK
C	48301.8	14099.76	13787.31	675.71	24923.32	5255.80	0.0	757.9	c d
C	0.0				0.00	0.00	0.0	0.0	COMB
E	48301.8	9399.84	12278.19	422.01	21489.84	3296.90	0.0	757.9	
D	42001.6	12260.66	11988.97	587.58	21672.45	4570.26	0.0	757.9	
D	0.0				0.00	0.00	0.0	0.0	COMB
F	42001.6	8173.78	10676.68	366.96	18686.82	2866.87	0.0	757.9	

Additional Design Data

M	periphery-O/-I [m2/m]	[m2/m]	deff [mm]	t-min [mm]	t-max [mm]	SMP [o/o]	thet-p [tm2/m]	thet-y [tm2/m]	thet-z [tm2/m]	thet-yz [tm2/m]
	5.982		48.2	45.0	52.0	0.0	0.388	0.356	0.031	

SOFiSTiK AG - www.sofistik.de

Composite bridge 38+50+38, b=14.25m, 2x2HL1100R HISTAR460 , slab 0.30m C30/37

Cross section No. 357.5 = CS 30 - in-situ conc:C3

Cross section No. 358 - VFT (351)

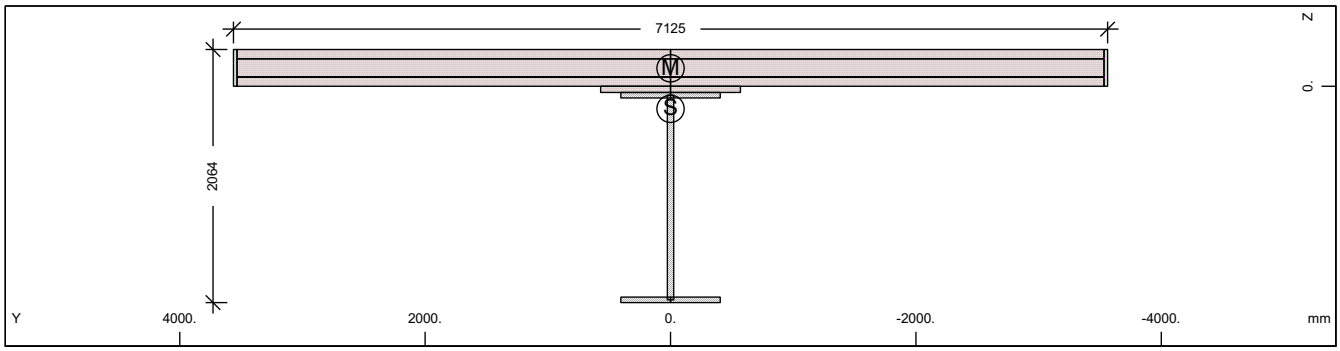

Cross section No. 358 - VFT (351)

Static properties of cross section

Mat NoR	A[cm2] It[cm4]	Ay/Az/Ayz [cm2]	Iy/Iz/Iyz [cm4]	ys/zs [mm]	y/z-sc [mm]	modules [N/mm2]	gam [kN/m]
1	5101.96	3097.68	19270058.	0.0	0.0	210000	67.40
	6270.0	761.33	142636288.	183.8	-146.9	80769	

Additional static properties of cross section

Alfa-T [1/°K]	ymin ymax [mm]	zmin zmax [mm]	hymin hzmin [mm]	AK AB [cm2]	MB	Tau-T Tau-B [1/m3]	Tau-Vy Tau-Vz [1/m2]
1.2E-05	-3562.5	-483.8		1.431E+04		4.767E+00	4.167E+00
	3562.5	1579.9		2.195E+04		1.255E+02	1.196E+01

Section values for warping

Wmin[cm2]	Wmax[cm2]	CM[cm6]	CMS[cm4]	ASwyy[cm6]	ASwzz[cm6]	ry[mm]	rz[mm]
-7646.83	7646.83	7479889348.	3246883.7	5556.83	750.72	0.0	-742.0

Partial cross sections

Mat NoR	A[cm2] It[cm4]	Ay/Az/Ayz [cm2]	Iy/Iz/Iyz [cm4]	ys/zs [mm]	modules [N/mm2]	gam [kN/m]
1	1596.71	0.12	7088169.5	0.0	210000	12.53
	12741.7	528.40	398580.9	906.8	80769	
30	21768.50	17699.28	169991.7	0.0	32837	54.42
	6364299.4	1329.49	882663541.	-145.4	13682	
31	176.51	0.03	0.0	0.0	0	0.44
	52952.0	0.00	22216693.	-150.0	0	
300	106.50	104.36	5990.7	0.0	200000	0.00
	0.2	8.11	4431400.1	-150.0	76923	

Design values of cross section

Mat NoR	A[cm2] It[cm4]	Ay/Az/Ayz [cm2]	Iy/Iz/Iyz [cm4]	ys/zs [mm]	modules [N/mm2]	gam [kN/m]
1	4307.74	2398.11	18244293.	0.0	182609	67.40
	6270.0	708.79	110432244.	244.5	70234	

Design forces and moments
(C/E = characteristic plastic/elastic, D=plast.Design, F=elast. Design)

	N[kN]	Vy[kN]	Vz[kN]	Mt[kNm]	My[kNm]	Mz[kNm]	y[mm]	z[mm]	BUCK
C	58814.9	53383.44	45583.08	99321.78	58328.36	71604.87	53.2	-74.6	c d
C	-45969.6				65063.41	0.00	0.0	183.8	COMB
C	-32917.5				0.00	72085.20	0.0	0.0	COMB
C	-124650.	53383.44	45583.08	99321.79	-37723.0	-71604.9	-53.2	753.9	
C	-19865.4				-43386.6	0.00	0.0	183.8	COMB
C	-32917.5				0.00	-72085.2	0.0	0.0	COMB
E	170915.8	24115.59	16173.97	3541.74	40860.71	77456.71	0.0	183.8	
E	-97885.9	24115.59	16173.97	3541.74	-40860.7	-77456.7	0.0	183.8	
D	51143.4	39073.58	34330.11	66381.16	49284.17	50812.42	21.2	-6.1	

SOFiSTiK AG - www.sofistik.de

Composite bridge 38+50+38, b=14.25m, 2x2HL1100R HISTAR460 , slab 0.30m C30/37

Design forces and moments
(C/E = characteristic plastic/elastic, D=plast.Design, F=elast. Design)

	N[kN]	Vy[kN]	Vz[kN]	Mt[kNm]	My[kNm]	Mz[kNm]	y[mm]	z[mm]	BUCK
D	-26615.7				52178.68	0.00	0.0	183.8	COMB
D	-21945.0				0.00	51045.54	0.0	0.0	COMB
D	-95033.4	39073.58	34330.11	66381.17	-32802.6	-50812.4	-21.2	753.7	
D	-17274.3				-37727.4	0.00	0.0	183.8	COMB
D	-21945.0				0.00	-51045.5	0.0	0.0	COMB
F	148622.5	16077.06	11494.49	2361.16	35531.05	51637.81	0.0	183.8	
F	-65257.3	16077.06	11494.49	2361.16	-35531.1	-51637.8	0.0	183.8	

Additional Design Data

M	periphery-O/-I [m2/m]	[m2/m]	deff [mm]	t-min [mm]	t-max [mm]	SMP [o/o]	thet-p [tm2/m]	thet-y [tm2/m]	thet-z [tm2/m]	thet-yz [tm2/m]
	51.372		19.9	0.8	300.0	0.0	24.344	1.690	22.653	
1	6.577		48.6	45.0	52.0	0.0	0.588	0.556	0.031	
30	16.412		600.0	50.0	300.0	0.0	22.071	0.004	22.067	
31	0.118		300.0	300.0	300.0	0.0	0.555		0.555	
**	28.265		0.8	0.8	0.8	0.0	0.000	0.000	0.000	

Cross section No. 358.1 = CS 1 - steel alone

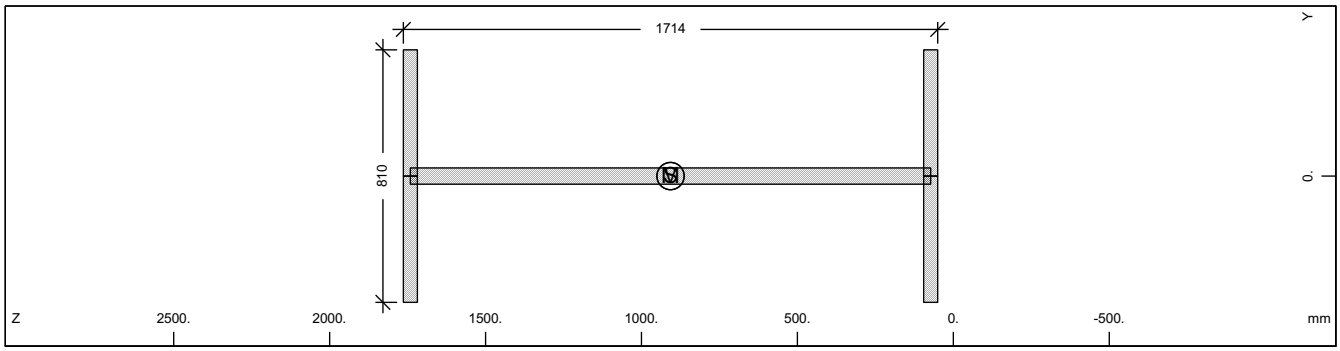

Cross section No. 358

Static properties of cross section

Mat NoR	A[cm2] It[cm4]	Ay/Az/Ayz [cm2]	Iy/Iz/Iyz [cm4]	ys/zs [mm]	modules [N/mm2]	gam [kN/m]
1	1596.71	607.50	7088169.5	0.0	210000	12.53
	6270.0	815.48	398580.9	906.8	80769	

Additional static properties of cross section

Alfa-T [1/°K]	ymin ymax [mm]	zmin zmax [mm]	hymin hzmin [mm]	AK AB [cm2]	MB	Tau-T Tau-B [1/m3]	Tau-Vy Tau-Vz [1/m2]
1.2E-05	-405.0	-856.8		9.424E+02		4.081E+02	2.058E+01
	405.0	856.8				1.255E+02	1.316E+01

Section values for warping

Wmin[cm2]	Wmax[cm2]	CM[cm6]	CMS[cm4]	ASwyy[cm6]	ASwzz[cm6]	ry[mm]	rz[mm]
-3379.07	3379.072774606703.		4228938.0	-0.65	-11.63	0.0	0.0

Design values of cross section

Mat NoR	A[cm2] It[cm4]	Ay/Az/Ayz [cm2]	Iy/Iz/Iyz [cm4]	ys/zs [mm]	modules [N/mm2]	gam [kN/m]
1	1596.71	607.50	7088169.5	0.0	182609	12.53
	6270.0	815.48	398580.9	906.8	70234	

Design forces and moments
(C/E = characteristic plastic/elastic, D=plast.Design, F=elast. Design)

	N[kN]	Vy[kN]	Vz[kN]	Mt[kNm]	My[kNm]	Mz[kNm]	y[mm]	z[mm]	BUCK
C	53489.9	14099.76	16782.63	753.59	32502.25	5323.24	0.0	906.8	c d
C	0.0				0.00	0.00	0.0	0.0	COMB
E	53489.9	9399.84	14695.46	473.92	27712.76	3296.90	0.0	906.8	
D	46512.9	12260.66	14593.59	655.30	28262.82	4628.91	0.0	906.8	

SOFiSTiK AG - www.sofistik.de

Composite bridge 38+50+38, b=14.25m, 2x2HL1100R HISTAR460 , slab 0.30m C30/37

Design forces and moments
(C/E = characteristic plastic/elastic, D=plast.Design, F=elast. Design)

	N[kN]	Vy[kN]	Vz[kN]	Mt[kNm]	My[kNm]	Mz[kNm]	y[mm]	z[mm]	BUCK
D	0.0				0.00	0.00	0.0	0.0	COMB
F	46512.9	8173.78	12778.66	412.11	24098.05	2866.87	0.0	906.8	

Additional Design Data

M	periphery-O/-I [m2/m]	[m2/m]	deff [mm]	t-min [mm]	t-max [mm]	SMP [o/o]	thet-p [tm2/m]	thet-y [tm2/m]	thet-z [tm2/m]	thet-yz [tm2/m]
	6.577		48.6	45.0	52.0	0.0	0.588	0.556	0.031	

Cross section No. 358.2 = CS 10 - prefab. slab C1

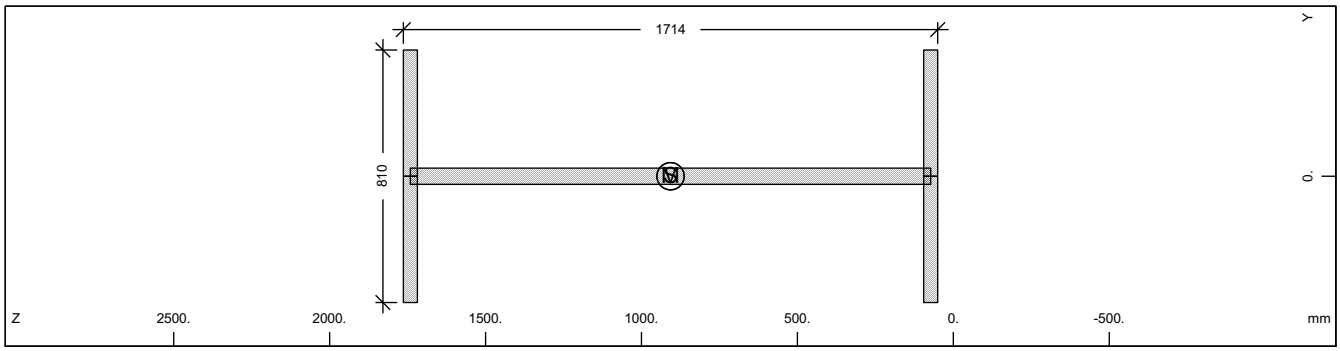

Cross section No. 358

Static properties of cross section

Mat NoR	A[cm2] It[cm4]	Ay/Az/Ayz [cm2]	Iy/Iz/Iyz [cm4]	ys/zs [mm]	modules [N/mm2]	gam [kN/m]
1	1596.71	607.50	7088169.5	0.0	210000	12.53
	6270.0	815.48	398580.9	906.8	80769	

Additional static properties of cross section

Alfa-T [1/°K]	ymin ymax [mm]	zmin zmax [mm]	hymin hzmin [mm]	AK AB [cm2]	MB	Tau-T Tau-B [1/m3]	Tau-Vy Tau-Vz [1/m2]
1.2E-05	-405.0	-856.8		9.424E+02		4.081E+02	2.058E+01
	405.0	856.8				1.255E+02	1.316E+01

Section values for warping

Wmin[cm2]	Wmax[cm2]	CM[cm6]	CMS[cm4]	ASwyy[cm6]	ASwzz[cm6]	ry[mm]	rz[mm]
-3379.07	3379.072774606703.		4228938.0	-0.65	-11.63	0.0	0.0

Design values of cross section

Mat NoR	A[cm2] It[cm4]	Ay/Az/Ayz [cm2]	Iy/Iz/Iyz [cm4]	ys/zs [mm]	modules [N/mm2]	gam [kN/m]
1	1596.71	607.50	7088169.5	0.0	182609	12.53
	6270.0	815.48	398580.9	906.8	70234	

Design forces and moments
(C/E = characteristic plastic/elastic, D=plast.Design, F=elast. Design)

	N[kN]	Vy[kN]	Vz[kN]	Mt[kNm]	My[kNm]	Mz[kNm]	y[mm]	z[mm]	BUCK
C	53489.9	14099.76	16782.63	753.59	32502.25	5323.24	0.0	906.8	c d
C	0.0				0.00	0.00	0.0	0.0	COMB
E	53489.9	9399.84	14695.46	473.92	27712.76	3296.90	0.0	906.8	
D	46512.9	12260.66	14593.59	655.30	28262.82	4628.91	0.0	906.8	
D	0.0				0.00	0.00	0.0	0.0	COMB
F	46512.9	8173.78	12778.66	412.11	24098.05	2866.87	0.0	906.8	

Additional Design Data

M	periphery-O/-I [m2/m]	[m2/m]	deff [mm]	t-min [mm]	t-max [mm]	SMP [o/o]	thet-p [tm2/m]	thet-y [tm2/m]	thet-z [tm2/m]	thet-yz [tm2/m]
	6.577		48.6	45.0	52.0	0.0	0.588	0.556	0.031	

SOFiSTiK AG - www.sofistik.de

Composite bridge 38+50+38, b=14.25m, 2x2HL1100R HISTAR460 , slab 0.30m C30/37

Cross section No. 358.3 = CS 20 - in-situ conc:C2

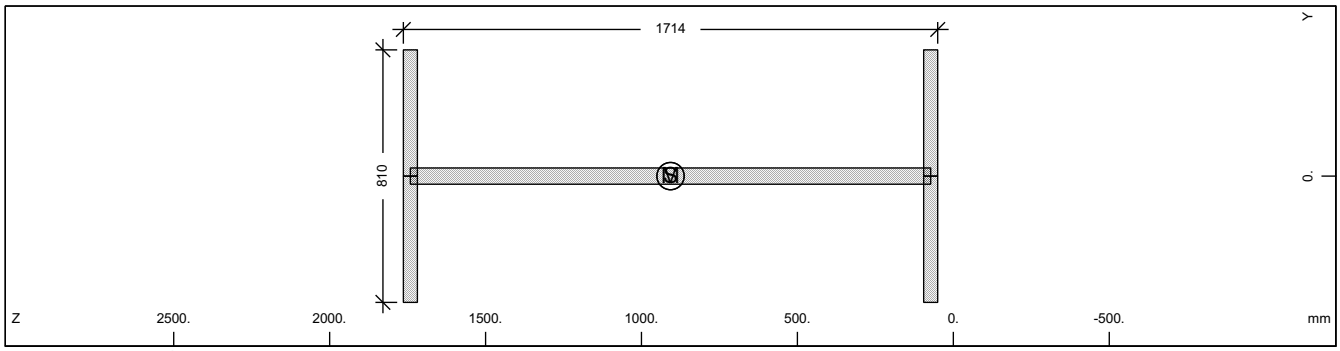

Cross section No. 358

Static properties of cross section

Mat NoR	A[cm2] It[cm4]	Ay/Az/Ayz [cm2]	Iy/Iz/Iyz [cm4]	ys/zs [mm]	modules [N/mm2]	gam [kN/m]
1	1596.71	607.50	7088169.5	0.0	210000	12.53
	6270.0	815.48	398580.9	906.8	80769	

Additional static properties of cross section

Alfa-T [1/°K]	ymin ymax [mm]	zmin zmax [mm]	hymin hzmin [mm]	AK AB [cm2]	MB	Tau-T Tau-B [1/m3]	Tau-Vy Tau-Vz [1/m2]
1.2E-05	-405.0	-856.8		9.424E+02		4.081E+02	2.058E+01
	405.0	856.8				1.255E+02	1.316E+01

Section values for warping

Wmin[cm2]	Wmax[cm2]	CM[cm6]	CMS[cm4]	ASwyy[cm6]	ASwzz[cm6]	ry[mm]	rz[mm]
-3379.07	3379.072774606703.		4228938.0	-0.65	-11.63	0.0	0.0

Design values of cross section

Mat NoR	A[cm2] It[cm4]	Ay/Az/Ayz [cm2]	Iy/Iz/Iyz [cm4]	ys/zs [mm]	modules [N/mm2]	gam [kN/m]
1	1596.71	607.50	7088169.5	0.0	182609	12.53
	6270.0	815.48	398580.9	906.8	70234	

Design forces and moments
(C/E = characteristic plastic/elastic, D=plast.Design, F=elast. Design)

	N[kN]	Vy[kN]	Vz[kN]	Mt[kNm]	My[kNm]	Mz[kNm]	y[mm]	z[mm]	BUCK
C	53489.9	14099.76	16782.63	753.59	32502.25	5323.24	0.0	906.8	c d
C	0.0				0.00	0.00	0.0	0.0	COMB
E	53489.9	9399.84	14695.46	473.92	27712.76	3296.90	0.0	906.8	
D	46512.9	12260.66	14593.59	655.30	28262.82	4628.91	0.0	906.8	
D	0.0				0.00	0.00	0.0	0.0	COMB
F	46512.9	8173.78	12778.66	412.11	24098.05	2866.87	0.0	906.8	

Additional Design Data

M	periphery-O/-I [m2/m] [m2/m]	deff [mm]	t-min [mm]	t-max [mm]	SMP [o/o]	thet-p [tm2/m]	thet-y [tm2/m]	thet-z [tm2/m]	thet-yz [tm2/m]
	6.577	48.6	45.0	52.0	0.0	0.588	0.556	0.031	

SOFiSTiK AG - www.sofistik.de

Composite bridge 38+50+38, b=14.25m, 2x2HL1100R HISTAR460 , slab 0.30m C30/37

Cross section No. 358.4 = CS 21 - reinf active:C2

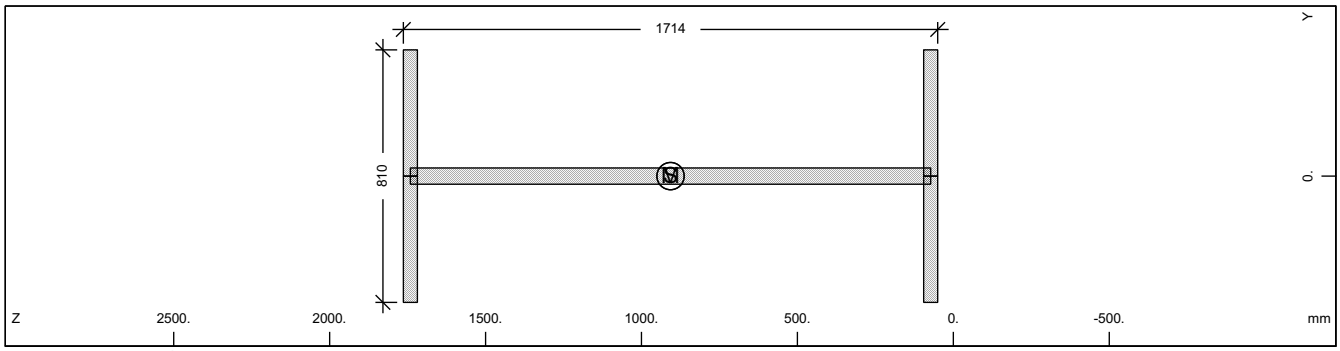

Cross section No. 358

Static properties of cross section

Mat NoR	A[cm2] It[cm4]	Ay/Az/Ayz [cm2]	Iy/Iz/Iyz [cm4]	ys/zs [mm]	modules [N/mm2]	gam [kN/m]
1	1596.71	607.50	7088169.5	0.0	210000	12.53
	6270.0	815.48	398580.9	906.8	80769	

Additional static properties of cross section

Alfa-T [1/°K]	ymin ymax [mm]	zmin zmax [mm]	hymin hzmin [mm]	AK AB [cm2]	MB	Tau-T Tau-B [1/m3]	Tau-Vy Tau-Vz [1/m2]
1.2E-05	-405.0	-856.8		9.424E+02		4.081E+02	2.058E+01
	405.0	856.8				1.255E+02	1.316E+01

Section values for warping

Wmin[cm2]	Wmax[cm2]	CM[cm6]	CMS[cm4]	ASwyy[cm6]	ASwzz[cm6]	ry[mm]	rz[mm]
-3379.07	3379.072774606703.		4228938.0	-0.65	-11.63	0.0	0.0

Design values of cross section

Mat NoR	A[cm2] It[cm4]	Ay/Az/Ayz [cm2]	Iy/Iz/Iyz [cm4]	ys/zs [mm]	modules [N/mm2]	gam [kN/m]
1	1596.71	607.50	7088169.5	0.0	182609	12.53
	6270.0	815.48	398580.9	906.8	70234	

Design forces and moments
(C/E = characteristic plastic/elastic, D=plast.Design, F=elast. Design)

	N[kN]	Vy[kN]	Vz[kN]	Mt[kNm]	My[kNm]	Mz[kNm]	y[mm]	z[mm]	BUCK
C	53489.9	14099.76	16782.63	753.59	32502.25	5323.24	0.0	906.8	c d
C	0.0				0.00	0.00	0.0	0.0	COMB
E	53489.9	9399.84	14695.46	473.92	27712.76	3296.90	0.0	906.8	
D	46512.9	12260.66	14593.59	655.30	28262.82	4628.91	0.0	906.8	
D	0.0				0.00	0.00	0.0	0.0	COMB
F	46512.9	8173.78	12778.66	412.11	24098.05	2866.87	0.0	906.8	

Additional Design Data

M	periphery-O/-I [m2/m] [m2/m]	deff [mm]	t-min [mm]	t-max [mm]	SMP [o/o]	thet-p [tm2/m]	thet-y [tm2/m]	thet-z [tm2/m]	thet-yz [tm2/m]
	6.577	48.6	45.0	52.0	0.0	0.588	0.556	0.031	

SOFiSTiK AG - www.sofistik.de

Composite bridge 38+50+38, b=14.25m, 2x2HL1100R HISTAR460 , slab 0.30m C30/37

Cross section No. 358.5 = CS 30 - in-situ conc:C3

Cross section No. 359 - VFT (351)

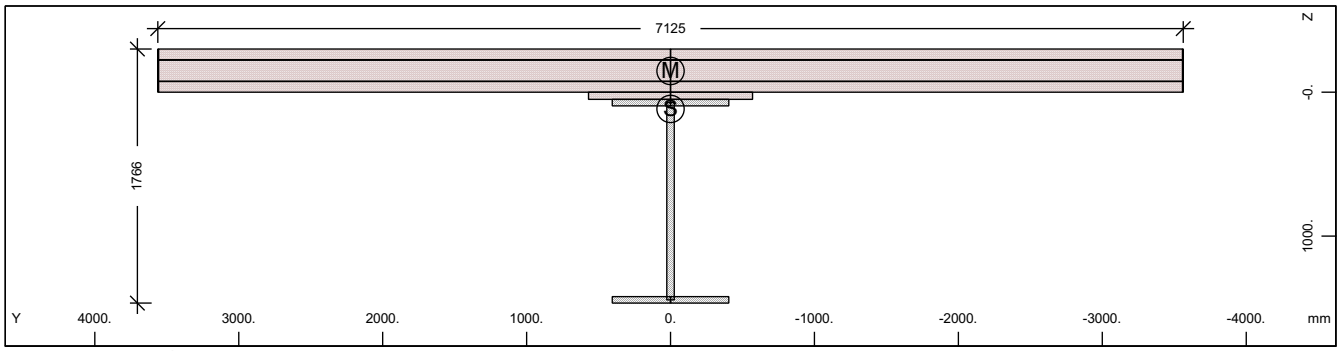

Cross section No. 359 - VFT (351)

Static properties of cross section

Mat NoR	A[cm2] It[cm4]	Ay/Az/Ayz [cm2]	Iy/Iz/Iyz [cm4]	ys/zs [mm]	y/z-sc [mm]	modules [N/mm2]	gam [kN/m]
1	4970.71	3118.65	12929648.	0.0	0.0	210000	66.18
	6270.0	615.30	145603753.	116.5	-147.4	80769	

Additional static properties of cross section

Alfa-T [1/°K]	ymin ymax [mm]	zmin zmax [mm]	hymin hzmin [mm]	AK AB [cm2]	MB	Tau-T Tau-B [1/m3]	Tau-Vy Tau-Vz [1/m2]
1.2E-05	-3562.5	-416.5		1.439E+04		4.741E+00	4.139E+00
	3562.5	1349.4		2.195E+04		1.255E+02	1.400E+01

Section values for warping

Wmin[cm2]	Wmax[cm2]	CM[cm6]	CMS[cm4]	ASwyy[cm6]	ASwzz[cm6]	ry[mm]	rz[mm]
-6442.56	6442.56	5420278314.	1820843.3	194.03	17.23	0.0	-1524.6

Partial cross sections

Mat NoR	A[cm2] It[cm4]	Ay/Az/Ayz [cm2]	Iy/Iz/Iyz [cm4]	ys/zs [mm]	modules [N/mm2]	gam [kN/m]
1	1441.85	0.12	4541274.9	0.0	210000	11.32
	11345.9	395.24	398580.9	757.9	80769	
30	21915.00	17819.13	170022.2	0.0	32837	54.79
	6408250.4	1254.85	901077848.	-145.4	13682	
31	30.00	0.00	0.0	0.0	0	0.08
	9000.6	0.00	3802349.1	-150.0	0	
300	107.24	105.06	6032.1	0.0	200000	0.00
	0.2	7.87	4523914.0	-150.0	76923	

Design values of cross section

Mat NoR	A[cm2] It[cm4]	Ay/Az/Ayz [cm2]	Iy/Iz/Iyz [cm4]	ys/zs [mm]	modules [N/mm2]	gam [kN/m]
1	4171.14	2414.34	12269639.	0.0	182609	66.18
	6270.0	565.70	112727857.	166.7	70234	

Design forces and moments
(C/E = characteristic plastic/elastic, D=plast.Design, F=elast. Design)

	N[kN]	Vy[kN]	Vz[kN]	Mt[kNm]	My[kNm]	Mz[kNm]	y[mm]	z[mm]	BUCK
C	53663.7	53404.68	42587.76	99243.91	46044.74	71273.03	125.0	-75.3	c d
C	-48849.5				50765.12	0.00	0.0	116.5	COMB
C	-32917.5				0.00	72148.23	0.0	0.0	COMB
C	-119499.	53404.68	42587.76	99243.91	-29378.9	-71273.0	-125.	603.8	
C	-16985.5				-33519.4	0.00	0.0	116.5	COMB
C	-32917.5				0.00	-72148.2	0.0	0.0	COMB
E	166518.7	24280.53	13813.63	3561.38	32099.96	78525.45	0.0	116.5	
E	-95367.6	24280.53	13813.63	3561.38	-32100.0	-78525.5	0.0	116.5	
D	46664.1	39092.05	31725.49	66313.45	38843.34	50820.16	25.5	-38.0	

SOFiSTiK AG - www.sofistik.de

Composite bridge 38+50+38, b=14.25m, 2x2HL1100R HISTAR460 , slab 0.30m C30/37

Design forces and moments
(C/E = characteristic plastic/elastic, D=plast.Design, F=elast. Design)

	N[kN]	Vy[kN]	Vz[kN]	Mt[kNm]	My[kNm]	Mz[kNm]	y[mm]	z[mm]	BUCK
D	-29120.0				40644.45	0.00	0.0	116.5	COMB
D	-21945.0				0.00	51100.34	0.0	0.0	COMB
D	-90554.1	39092.05	31725.48	66313.44	-25546.9	-50820.2	-25.5	603.4	
D	-14770.0				-29147.3	0.00	0.0	116.5	COMB
D	-21945.0				0.00	-51100.3	0.0	0.0	COMB
F	144798.8	16187.02	9594.00	2374.25	27913.01	52350.30	0.0	116.5	
F	-63578.4	16187.02	9594.00	2374.25	-27913.0	-52350.3	0.0	116.5	

Additional Design Data

M	periphery-O/-I [m2/m]	[m2/m]	deff [mm]	t-min [mm]	t-max [mm]	SMP [o/o]	thet-p [tm2/m]	thet-y [tm2/m]	thet-z [tm2/m]	thet-yz [tm2/m]
	50.972		19.5	0.8	300.0	0.0	23.780	1.126	22.653	
1	5.982		48.2	45.0	52.0	0.0	0.388	0.356	0.031	
30	16.510		600.0	50.0	300.0	0.0	22.531	0.004	22.527	
31	0.020		300.0	300.0	300.0	0.0	0.095		0.095	
**	28.460		0.8	0.8	0.8	0.0	0.000	0.000	0.000	

Cross section No. 359.1 = CS 1 - steel alone

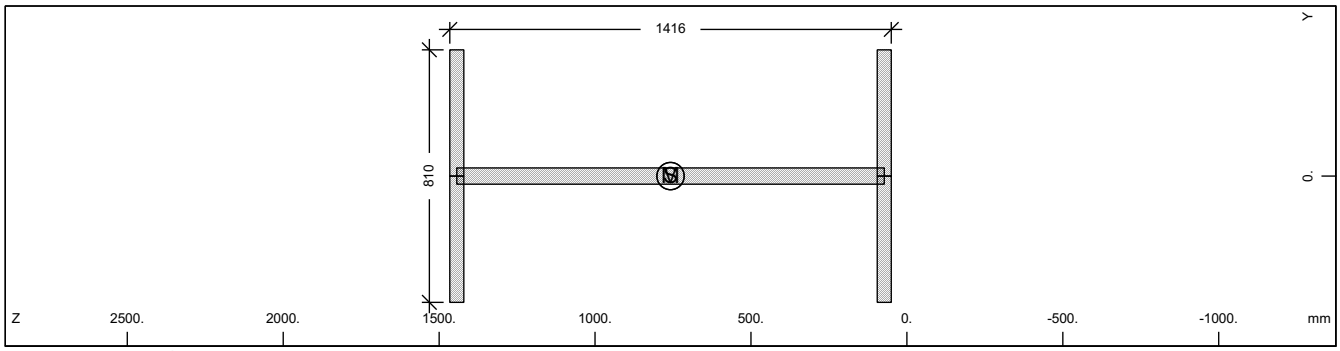

Cross section No. 359

Static properties of cross section

Mat NoR	A[cm2] It[cm4]	Ay/Az/Ayz [cm2]	Iy/Iz/Iyz [cm4]	ys/zs [mm]	modules [N/mm2]	gam [kN/m]
1	1441.85	607.50	4541274.9	0.0	210000	11.32
	6270.0	662.00	398580.9	757.9	80769	

Additional static properties of cross section

Alfa-T [1/°K]	ymin ymax [mm]	zmin zmax [mm]	hymin hzmin [mm]	AK AB [cm2]	MB	Tau-T Tau-B [1/m3]	Tau-Vy Tau-Vz [1/m2]
1.2E-05	-405.0	-707.9		8.392E+02		4.583E+02	2.058E+01
	405.0	707.9				1.255E+02	1.575E+01

Section values for warping

Wmin[cm2]	Wmax[cm2]	CM[cm6]	CMS[cm4]	ASwyy[cm6]	ASwzz[cm6]	ry[mm]	rz[mm]
-2775.99	2775.991872581088.	2854108.8		-3.09	-35.25	0.0	0.0

Design values of cross section

Mat NoR	A[cm2] It[cm4]	Ay/Az/Ayz [cm2]	Iy/Iz/Iyz [cm4]	ys/zs [mm]	modules [N/mm2]	gam [kN/m]
1	1441.85	607.50	4541274.9	0.0	182609	11.32
	6270.0	662.00	398580.9	757.9	70234	

Design forces and moments
(C/E = characteristic plastic/elastic, D=plast.Design, F=elast. Design)

	N[kN]	Vy[kN]	Vz[kN]	Mt[kNm]	My[kNm]	Mz[kNm]	y[mm]	z[mm]	BUCK
C	48301.8	14099.76	13787.31	675.71	24923.32	5255.80	0.0	757.9	c d
C	0.0				0.00	0.00	0.0	0.0	COMB
E	48301.8	9399.84	12278.19	422.01	21489.84	3296.90	0.0	757.9	
D	42001.6	12260.66	11988.97	587.58	21672.45	4570.26	0.0	757.9	

SOFiSTiK AG - www.sofistik.de

Composite bridge 38+50+38, b=14.25m, 2x2HL1100R HISTAR460 , slab 0.30m C30/37

Design forces and moments
(C/E = characteristic plastic/elastic, D=plast.Design, F=elast. Design)

	N[kN]	Vy[kN]	Vz[kN]	Mt[kNm]	My[kNm]	Mz[kNm]	y[mm]	z[mm]	BUCK
D	0.0				0.00	0.00	0.0	0.0	COMB
F	42001.6	8173.78	10676.68	366.96	18686.82	2866.87	0.0	757.9	

Additional Design Data

M	periphery-O/-I [m2/m]	[m2/m]	deff [mm]	t-min [mm]	t-max [mm]	SMP [o/o]	thet-p [tm2/m]	thet-y [tm2/m]	thet-z [tm2/m]	thet-yz [tm2/m]
	5.982		48.2	45.0	52.0	0.0	0.388	0.356	0.031	

Cross section No. 359.2 = CS 10 - prefab. slab C1

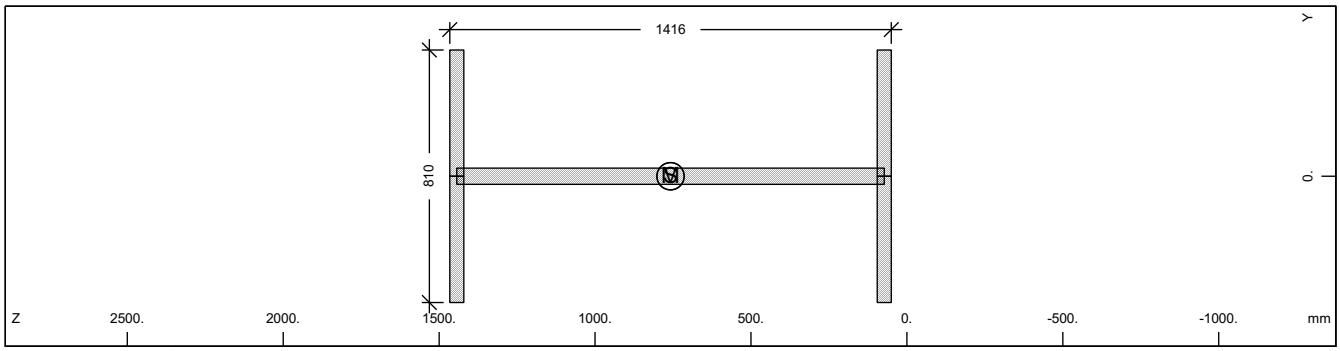

Cross section No. 359

Static properties of cross section

Mat NoR	A[cm2] It[cm4]	Ay/Az/Ayz [cm2]	Iy/Iz/Iyz [cm4]	ys/zs [mm]	modules [N/mm2]	gam [kN/m]
1	1441.85	607.50	4541274.9	0.0	210000	11.32
	6270.0	662.00	398580.9	757.9	80769	

Additional static properties of cross section

Alfa-T [1/°K]	ymin ymax [mm]	zmin zmax [mm]	hymin hzmin [mm]	AK AB [cm2]	MB	Tau-T Tau-B [1/m3]	Tau-Vy Tau-Vz [1/m2]
1.2E-05	-405.0	-707.9		8.392E+02		4.583E+02	2.058E+01
	405.0	707.9				1.255E+02	1.575E+01

Section values for warping

Wmin[cm2]	Wmax[cm2]	CM[cm6]	CMS[cm4]	ASwyy[cm6]	ASwzz[cm6]	ry[mm]	rz[mm]
-2775.99	2775.991872581088.		2854108.8	-3.09	-35.25	0.0	0.0

Design values of cross section

Mat NoR	A[cm2] It[cm4]	Ay/Az/Ayz [cm2]	Iy/Iz/Iyz [cm4]	ys/zs [mm]	modules [N/mm2]	gam [kN/m]
1	1441.85	607.50	4541274.9	0.0	182609	11.32
	6270.0	662.00	398580.9	757.9	70234	

Design forces and moments
(C/E = characteristic plastic/elastic, D=plast.Design, F=elast. Design)

	N[kN]	Vy[kN]	Vz[kN]	Mt[kNm]	My[kNm]	Mz[kNm]	y[mm]	z[mm]	BUCK
C	48301.8	14099.76	13787.31	675.71	24923.32	5255.80	0.0	757.9	c d
C	0.0				0.00	0.00	0.0	0.0	COMB
E	48301.8	9399.84	12278.19	422.01	21489.84	3296.90	0.0	757.9	
D	42001.6	12260.66	11988.97	587.58	21672.45	4570.26	0.0	757.9	
D	0.0				0.00	0.00	0.0	0.0	COMB
F	42001.6	8173.78	10676.68	366.96	18686.82	2866.87	0.0	757.9	

Additional Design Data

M	periphery-O/-I [m2/m]	[m2/m]	deff [mm]	t-min [mm]	t-max [mm]	SMP [o/o]	thet-p [tm2/m]	thet-y [tm2/m]	thet-z [tm2/m]	thet-yz [tm2/m]
	5.982		48.2	45.0	52.0	0.0	0.388	0.356	0.031	

SOFiSTiK AG - www.sofistik.de

Composite bridge 38+50+38, b=14.25m, 2x2HL1100R HISTAR460 , slab 0.30m C30/37

Cross section No. 359.3 = CS 20 - in-situ conc:C2

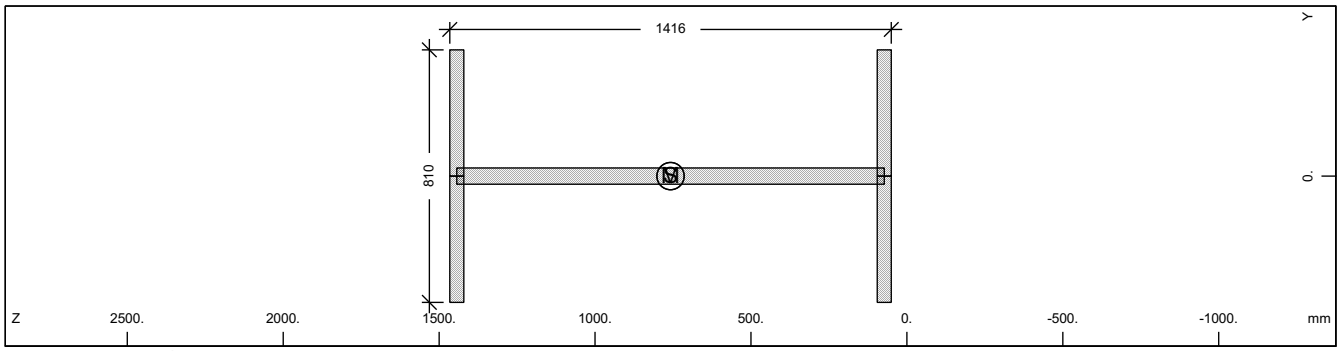

Cross section No. 359

Static properties of cross section

Mat NoR	A[cm2] It[cm4]	Ay/Az/Ayz [cm2]	Iy/Iz/Iyz [cm4]	ys/zs [mm]	modules [N/mm2]	gam [kN/m]
1	1441.85	607.50	4541274.9	0.0	210000	11.32
	6270.0	662.00	398580.9	757.9	80769	

Additional static properties of cross section

Alfa-T [1/°K]	ymin ymax [mm]	zmin zmax [mm]	hymin hzmin [mm]	AK AB [cm2]	MB	Tau-T Tau-B [1/m3]	Tau-Vy Tau-Vz [1/m2]
1.2E-05	-405.0	-707.9		8.392E+02		4.583E+02	2.058E+01
	405.0	707.9				1.255E+02	1.575E+01

Section values for warping

Wmin[cm2]	Wmax[cm2]	CM[cm6]	CMS[cm4]	ASwyy[cm6]	ASwzz[cm6]	ry[mm]	rz[mm]
-2775.99	2775.991872581088.		2854108.8	-3.09	-35.25	0.0	0.0

Design values of cross section

Mat NoR	A[cm2] It[cm4]	Ay/Az/Ayz [cm2]	Iy/Iz/Iyz [cm4]	ys/zs [mm]	modules [N/mm2]	gam [kN/m]
1	1441.85	607.50	4541274.9	0.0	182609	11.32
	6270.0	662.00	398580.9	757.9	70234	

Design forces and moments
(C/E = characteristic plastic/elastic, D=plast.Design, F=elast. Design)

	N[kN]	Vy[kN]	Vz[kN]	Mt[kNm]	My[kNm]	Mz[kNm]	y[mm]	z[mm]	BUCK
C	48301.8	14099.76	13787.31	675.71	24923.32	5255.80	0.0	757.9	c d
C	0.0				0.00	0.00	0.0	0.0	COMB
E	48301.8	9399.84	12278.19	422.01	21489.84	3296.90	0.0	757.9	
D	42001.6	12260.66	11988.97	587.58	21672.45	4570.26	0.0	757.9	
D	0.0				0.00	0.00	0.0	0.0	COMB
F	42001.6	8173.78	10676.68	366.96	18686.82	2866.87	0.0	757.9	

Additional Design Data

M	periphery-O/-I [m2/m]	[m2/m]	deff [mm]	t-min [mm]	t-max [mm]	SMP [o/o]	thet-p [tm2/m]	thet-y [tm2/m]	thet-z [tm2/m]	thet-yz [tm2/m]
	5.982		48.2	45.0	52.0	0.0	0.388	0.356	0.031	

SOFiSTiK AG - www.sofistik.de

Composite bridge 38+50+38, b=14.25m, 2x2HL1100R HISTAR460 , slab 0.30m C30/37

Cross section No. 359.4 = CS 21 - reinf active:C2

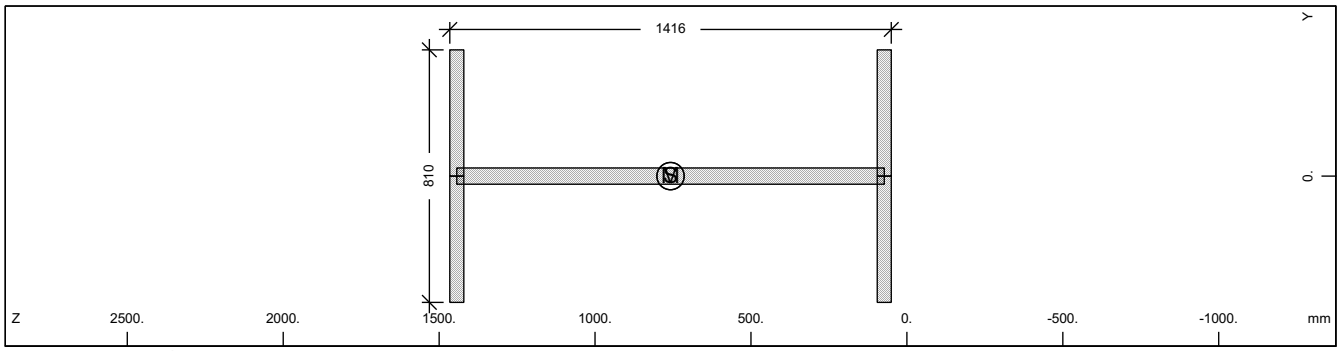

Cross section No. 359

Static properties of cross section

Mat NoR	A[cm2] It[cm4]	Ay/Az/Ayz [cm2]	Iy/Iz/Iyz [cm4]	ys/zs [mm]	modules [N/mm2]	gam [kN/m]
1	1441.85	607.50	4541274.9	0.0	210000	11.32
	6270.0	662.00	398580.9	757.9	80769	

Additional static properties of cross section

Alfa-T [1/°K]	ymin ymax [mm]	zmin zmax [mm]	hymin hzmin [mm]	AK AB [cm2]	MB	Tau-T Tau-B [1/m3]	Tau-Vy Tau-Vz [1/m2]
1.2E-05	-405.0	-707.9		8.392E+02		4.583E+02	2.058E+01
	405.0	707.9				1.255E+02	1.575E+01

Section values for warping

Wmin[cm2]	Wmax[cm2]	CM[cm6]	CMS[cm4]	ASwyy[cm6]	ASwzz[cm6]	ry[mm]	rz[mm]
-2775.99	2775.991872581088.		2854108.8	-3.09	-35.25	0.0	0.0

Design values of cross section

Mat NoR	A[cm2] It[cm4]	Ay/Az/Ayz [cm2]	Iy/Iz/Iyz [cm4]	ys/zs [mm]	modules [N/mm2]	gam [kN/m]
1	1441.85	607.50	4541274.9	0.0	182609	11.32
	6270.0	662.00	398580.9	757.9	70234	

Design forces and moments
(C/E = characteristic plastic/elastic, D=plast.Design, F=elast. Design)

	N[kN]	Vy[kN]	Vz[kN]	Mt[kNm]	My[kNm]	Mz[kNm]	y[mm]	z[mm]	BUCK
C	48301.8	14099.76	13787.31	675.71	24923.32	5255.80	0.0	757.9	c d
C	0.0				0.00	0.00	0.0	0.0	COMB
E	48301.8	9399.84	12278.19	422.01	21489.84	3296.90	0.0	757.9	
D	42001.6	12260.66	11988.97	587.58	21672.45	4570.26	0.0	757.9	
D	0.0				0.00	0.00	0.0	0.0	COMB
F	42001.6	8173.78	10676.68	366.96	18686.82	2866.87	0.0	757.9	

Additional Design Data

M	periphery-O/-I [m2/m]	[m2/m]	deff [mm]	t-min [mm]	t-max [mm]	SMP [o/o]	thet-p [tm2/m]	thet-y [tm2/m]	thet-z [tm2/m]	thet-yz [tm2/m]
	5.982		48.2	45.0	52.0	0.0	0.388	0.356	0.031	

SOFiSTiK AG - www.sofistik.de

Composite bridge 38+50+38, b=14.25m, 2x2HL1100R HISTAR460 , slab 0.30m C30/37

Cross section No. 359.5 = CS 30 - in-situ conc:C3

Cross section No. 360 - VFT (353)

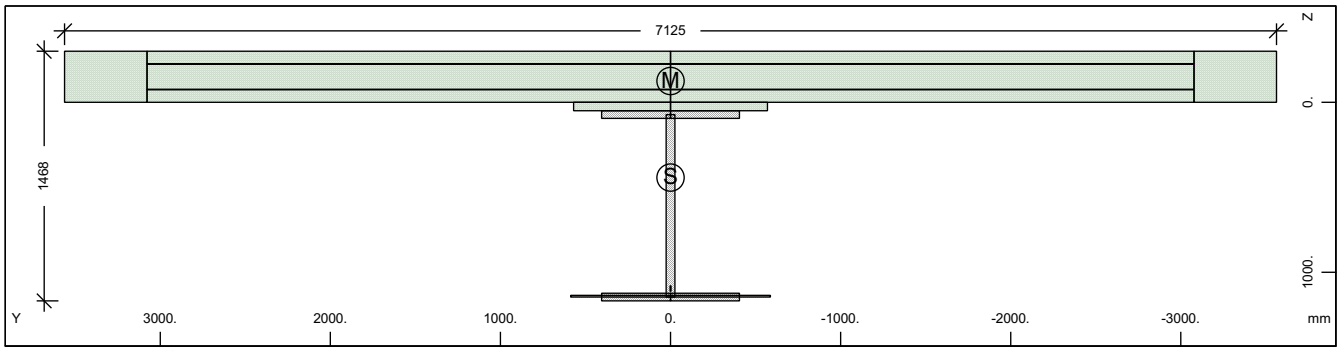

Cross section No. 360 - VFT (353)

Static properties of cross section

Mat NoR	A[cm2] It[cm4]	Ay/Az/Ayz [cm2]	Iy/Iz/Iyz [cm4]	ys/zs [mm]	y/z-sc [mm]	modules [N/mm2]	gam [kN/m]
1	1661.66	327.98	4335106.2	0.0	0.0	210000	65.26
	6270.0	269.37	12020384.	442.9	-124.8	80769	

Additional static properties of cross section

Alfa-T [1/°K]	ymin ymax [mm]	zmin zmax [mm]	hymin hzmin [mm]	AK AB [cm2]	MB	Tau-T Tau-B [1/m3]	Tau-Vy Tau-Vz [1/m2]
1.2E-05	-3562.5	-742.9		1.045E+02		1.630E+02	3.752E+01
	3562.5	725.1		2.206E+04		1.255E+02	4.516E+01

Section values for warping

Wmin[cm2]	Wmax[cm2]	CM[cm6]	CMS[cm4]	ASwyy[cm6]	ASwzz[cm6]	ry[mm]	rz[mm]
-5144.85	5144.854	020981972.	544103.2	-41.89	-15.11	0.0	-303.0

Partial cross sections

Mat NoR	A[cm2] It[cm4]	Ay/Az/Ayz [cm2]	Iy/Iz/Iyz [cm4]	ys/zs [mm]	modules [N/mm2]	gam [kN/m]
1	1286.96	0.19	2633627.3	0.0	210000	10.10
	9949.8	107.28	398580.9	609.0	80769	
25	117.40		9.8	0.0	10667	0.29
	539364.9	0.00	0.0	1140.5	4444	
210	0.64	0.00	0.0	0.0	200000	0.00
	2.2	0.00	0.0	1095.5	76923	
31	21945.00	29121.21	170028.4	0.0	0	54.86
	6417251.4	10462.17904880243.		-145.5	0	
300	386.53	344.18	21742.5	0.0	200000	0.00
	12.7	169.84	12202888.	-150.0	76923	

Design values of cross section

Mat NoR	A[cm2] It[cm4]	Ay/Az/Ayz [cm2]	Iy/Iz/Iyz [cm4]	ys/zs [mm]	modules [N/mm2]	gam [kN/m]
1	1660.27	327.98	4328329.9	0.0	182609	65.26
	6270.0	269.03	12020382.	442.4	70234	

Design forces and moments
(C/E = characteristic plastic/elastic, D=plast.Design, F=elast. Design)

	N[kN]	Vy[kN]	Vz[kN]	Mt[kNm]	My[kNm]	Mz[kNm]	y[mm]	z[mm]	BUCK
C	62472.0	61485.85	40247.68	99303.77	36329.82	90822.15	185.7	-98.2	c c
C	-79343.9				68813.80	0.00	0.0	442.9	COMB
C	-33093.6				0.00	92334.27	0.0	0.0	COMB
C	-70459.2	61485.85	40247.68	99303.77	-27853.0	-90756.8	-186.	93.2	
C	13156.7				-30322.7	0.00	0.0	442.9	COMB
C	-33093.6				0.00	-92334.3	0.0	0.0	COMB
E	55665.7	7693.98	6392.42	101.25	20029.42	20505.93	0.0	442.9	

SOFiSTiK AG - www.sofistik.de

Composite bridge 38+50+38, b=14.25m, 2x2HL1100R HISTAR460 , slab 0.30m C30/37

Design forces and moments
(C/E = characteristic plastic/elastic, D=plast.Design, F=elast. Design)

	N[kN]	Vy[kN]	Vz[kN]	Mt[kNm]	My[kNm]	Mz[kNm]	y[mm]	z[mm]	BUCK
E	-55665.7	7693.98	6392.42	101.25	-20029.4	-20505.9	0.0	442.9	
D	54323.5	46119.16	29651.33	66342.43	30548.96	68195.58	88.8	-75.5	
D	-55636.9				51978.46	0.00	0.0	442.9	COMB
D	-22062.4				0.00	68642.93	0.0	0.0	COMB
D	-59648.3	46119.16	29651.32	66342.43	-24145.1	-68174.7	-88.8	93.1	
D	11512.1				-26317.8	0.00	0.0	442.9	COMB
D	-22062.4				0.00	-68642.9	0.0	0.0	COMB
F	48405.0	6690.41	5558.62	67.50	17416.89	17831.25	0.0	442.9	
F	-48405.0	6690.41	5558.62	67.50	-17416.9	-17831.2	0.0	442.9	

Additional Design Data

M	periphery-O/-I [m2/m]	[m2/m]	deff [mm]	t-min [mm]	t-max [mm]	SMP [o/o]	thet-p [tm2/m]	thet-y [tm2/m]	thet-z [tm2/m]	thet-yz [tm2/m]
	46.560		7.1	3.1	300.0	0.0	23.390	0.737	22.653	
1	5.386		47.8	45.0	52.0	0.0	0.238	0.207	0.031	
25	0.020		1174.0			0.0	0.000	0.000		
**	0.004		32.0			0.0	0.000		0.000	
31	16.530		265.5	50.0	300.0	0.0	22.626	0.004	22.622	
**	24.620		3.1	3.1	3.1	0.0	0.000	0.000	0.000	

Cross section No. 360.1 = CS 1 - steel alone

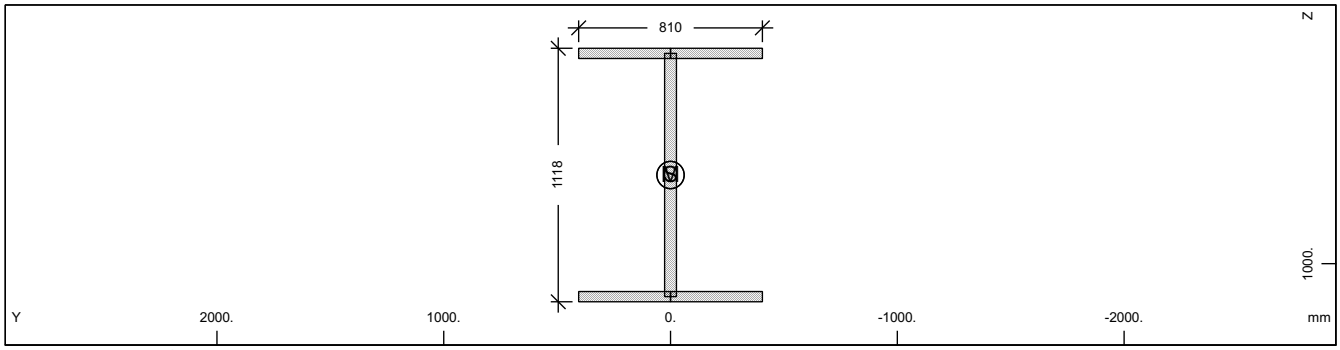

Cross section No. 360

Static properties of cross section

Mat NoR	A[cm2] It[cm4]	Ay/Az/Ayz [cm2]	Iy/Iz/Iyz [cm4]	ys/zs [mm]	modules [N/mm2]	gam [kN/m]
1	1286.96	607.50	2633627.3	0.0	210000	10.10
	6270.0	506.98	398580.9	609.0	80769	

Additional static properties of cross section

Alfa-T [1/°K]	ymin ymax [mm]	zmin zmax [mm]	hymin hzmin [mm]	AK AB [cm2]	MB	Tau-T Tau-B [1/m3]	Tau-Vy Tau-Vz [1/m2]
1.2E-05	-405.0	-559.0		7.359E+02		5.226E+02	2.058E+01
	405.0	559.0				1.255E+02	1.974E+01

Section values for warping

Wmin[cm2]	Wmax[cm2]	CM[cm6]	CMS[cm4]	ASwyy[cm6]	ASwzz[cm6]	ry[mm]	rz[mm]
-2172.83	2172.831147244363.	1748581.4		-0.16	-1.04	0.0	0.0

Design values of cross section

Mat NoR	A[cm2] It[cm4]	Ay/Az/Ayz [cm2]	Iy/Iz/Iyz [cm4]	ys/zs [mm]	modules [N/mm2]	gam [kN/m]
1	1286.96	607.50	2633627.3	0.0	182609	10.10
	6270.0	506.98	398580.9	609.0	70234	

SOFiSTiK AG - www.sofistik.de

Composite bridge 38+50+38, b=14.25m, 2x2HL1100R HISTAR460 , slab 0.30m C30/37

Design forces and moments
(C/E = characteristic plastic/elastic, D=plast.Design, F=elast. Design)

	N[kN]	Vy[kN]	Vz[kN]	Mt[kNm]	My[kNm]	Mz[kNm]	y[mm]	z[mm]	BUCK
C	43113.2	14099.76	10791.64	597.83	18116.18	5188.35	0.0	609.0	c c
C	0.0				0.00	0.00	0.0	0.0	COMB
E	43113.2	9399.84	9796.03	370.08	15782.92	3296.90	0.0	609.0	
D	37489.7	12260.66	9384.03	519.85	15753.20	4511.61	0.0	609.0	
D	0.0				0.00	0.00	0.0	0.0	COMB
F	37489.7	8173.78	8518.29	321.81	13724.27	2866.87	0.0	609.0	

Additional Design Data

M	periphery-O/-I [m2/m]	[m2/m]	deff [mm]	t-min [mm]	t-max [mm]	SMP [o/o]	thet-p [tm2/m]	thet-y [tm2/m]	thet-z [tm2/m]	thet-yz [tm2/m]
	5.386		47.8	45.0	52.0	0.0	0.238	0.207	0.031	

Cross section No. 360.2 = CS 10 - prefab. slab C1

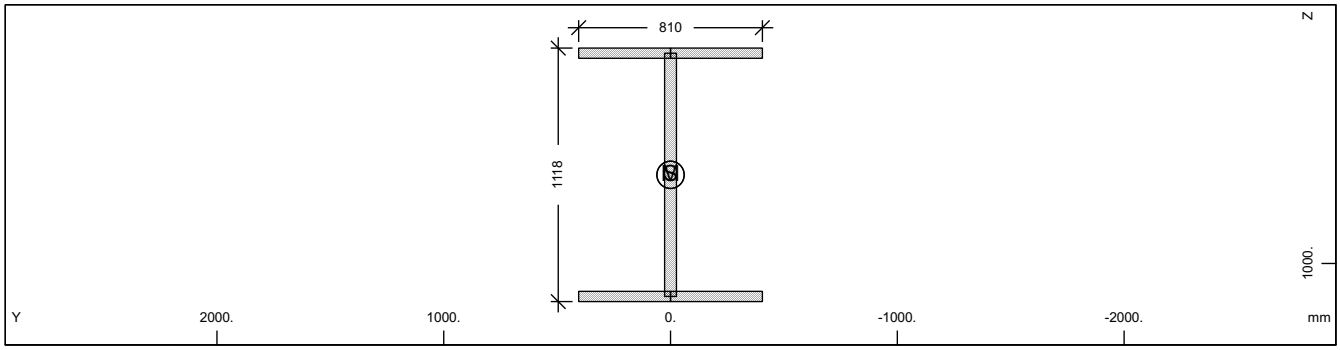

Cross section No. 360

Static properties of cross section

Mat NoR	A[cm2] It[cm4]	Ay/Az/Ayz [cm2]	Iy/Iz/Iyz [cm4]	ys/zs [mm]	modules [N/mm2]	gam [kN/m]
1	1286.96	607.50	2633627.3	0.0	210000	10.10
	6270.0	506.98	398580.9	609.0	80769	

Additional static properties of cross section

Alfa-T [1/°K]	ymin ymax [mm]	zmin zmax [mm]	hymin hzmin [mm]	AK AB [cm2]	MB	Tau-T Tau-B [1/m3]	Tau-Vy Tau-Vz [1/m2]
1.2E-05	-405.0	-559.0		7.359E+02		5.226E+02	2.058E+01
	405.0	559.0				1.255E+02	1.974E+01

Section values for warping

Wmin[cm2]	Wmax[cm2]	CM[cm6]	CMS[cm4]	ASwyy[cm6]	ASwzz[cm6]	ry[mm]	rz[mm]
-2172.83	2172.831147244363.		1748581.4	-0.16	-1.04	0.0	0.0

Design values of cross section

Mat NoR	A[cm2] It[cm4]	Ay/Az/Ayz [cm2]	Iy/Iz/Iyz [cm4]	ys/zs [mm]	modules [N/mm2]	gam [kN/m]
1	1286.96	607.50	2633627.3	0.0	182609	10.10
	6270.0	506.98	398580.9	609.0	70234	

Design forces and moments
(C/E = characteristic plastic/elastic, D=plast.Design, F=elast. Design)

	N[kN]	Vy[kN]	Vz[kN]	Mt[kNm]	My[kNm]	Mz[kNm]	y[mm]	z[mm]	BUCK
C	43113.2	14099.76	10791.64	597.83	18116.18	5188.35	0.0	609.0	c c
C	0.0				0.00	0.00	0.0	0.0	COMB
E	43113.2	9399.84	9796.03	370.08	15782.92	3296.90	0.0	609.0	
D	37489.7	12260.66	9384.03	519.85	15753.20	4511.61	0.0	609.0	
D	0.0				0.00	0.00	0.0	0.0	COMB
F	37489.7	8173.78	8518.29	321.81	13724.27	2866.87	0.0	609.0	

SOFiSTiK AG - www.sofistik.de

Composite bridge 38+50+38, b=14.25m, 2x2HL1100R HISTAR460 , slab 0.30m C30/37

Additional Design Data

M	periphery-O/-I [m2/m]	[m2/m]	deff [mm]	t-min [mm]	t-max [mm]	SMP [o/o]	thet-p [tm2/m]	thet-y [tm2/m]	thet-z [tm2/m]	thet-yz [tm2/m]
	5.386		47.8	45.0	52.0	0.0	0.238	0.207	0.031	

Cross section No. 360.3 = CS 20 - in-situ conc:C2

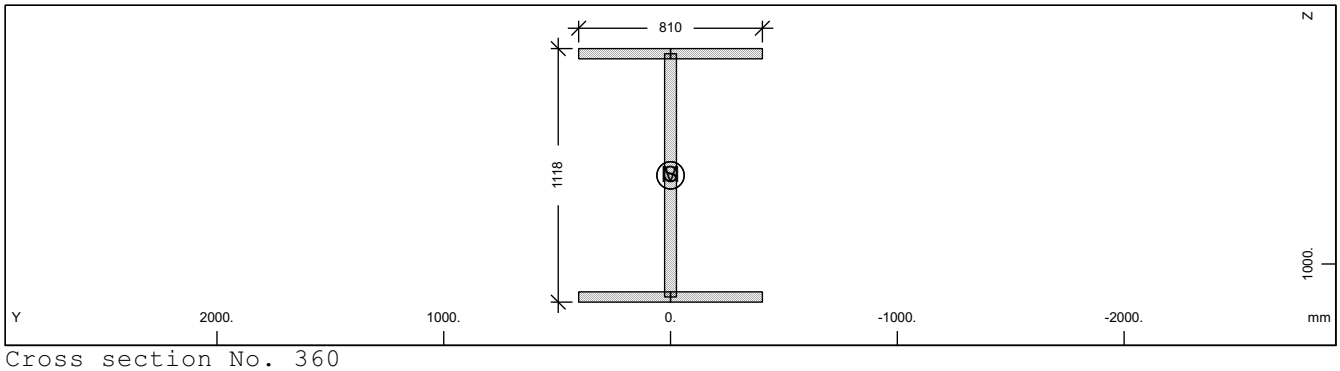

Cross section No. 360

Static properties of cross section

Mat NoR	A[cm2] It[cm4]	Ay/Az/Ayz [cm2]	Iy/Iz/Iyz [cm4]	ys/zs [mm]	modules [N/mm2]	gam [kN/m]
1	1286.96	607.50	2633627.3	0.0	210000	10.10
	6270.0	506.98	398580.9	609.0	80769	

Additional static properties of cross section

Alfa-T [1/°K]	ymin ymax [mm]	zmin zmax [mm]	hymin hzmin [mm]	AK AB [cm2]	MB	Tau-T Tau-B [1/m3]	Tau-Vy Tau-Vz [1/m2]
1.2E-05	-405.0	-559.0		7.359E+02		5.226E+02	2.058E+01
	405.0	559.0				1.255E+02	1.974E+01

Section values for warping

Wmin[cm2]	Wmax[cm2]	CM[cm6]	CMS[cm4]	ASwyy[cm6]	ASwzz[cm6]	ry[mm]	rz[mm]
-2172.83	2172.831147244363.		1748581.4	-0.16	-1.04	0.0	0.0

Design values of cross section

Mat NoR	A[cm2] It[cm4]	Ay/Az/Ayz [cm2]	Iy/Iz/Iyz [cm4]	ys/zs [mm]	modules [N/mm2]	gam [kN/m]
1	1286.96	607.50	2633627.3	0.0	182609	10.10
	6270.0	506.98	398580.9	609.0	70234	

Design forces and moments
(C/E = characteristic plastic/elastic, D=plast.Design, F=elast. Design)

	N[kN]	Vy[kN]	Vz[kN]	Mt[kNm]	My[kNm]	Mz[kNm]	y[mm]	z[mm]	BUCK
C	43113.2	14099.76	10791.64	597.83	18116.18	5188.35	0.0	609.0	c c
C	0.0				0.00	0.00	0.0	0.0	COMB
E	43113.2	9399.84	9796.03	370.08	15782.92	3296.90	0.0	609.0	
D	37489.7	12260.66	9384.03	519.85	15753.20	4511.61	0.0	609.0	
D	0.0				0.00	0.00	0.0	0.0	COMB
F	37489.7	8173.78	8518.29	321.81	13724.27	2866.87	0.0	609.0	

Additional Design Data

M	periphery-O/-I [m2/m]	[m2/m]	deff [mm]	t-min [mm]	t-max [mm]	SMP [o/o]	thet-p [tm2/m]	thet-y [tm2/m]	thet-z [tm2/m]	thet-yz [tm2/m]
	5.386		47.8	45.0	52.0	0.0	0.238	0.207	0.031	

SOFiSTiK AG - www.sofistik.de

Composite bridge 38+50+38, b=14.25m, 2x2HL1100R HISTAR460 , slab 0.30m C30/37

Cross section No. 360.4 = CS 21 - reinf active:C2

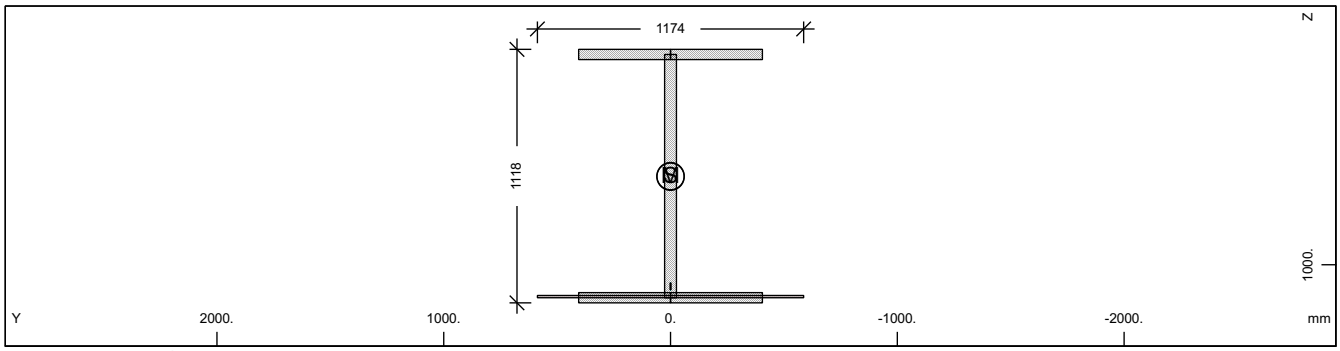

Cross section No. 360

Static properties of cross section

Mat NoR	A[cm2] It[cm4]	Ay/Az/Ayz [cm2]	Iy/Iz/Iyz [cm4]	ys/zs [mm]	modules [N/mm2]	gam [kN/m]
1	1293.54	607.50	2651829.8	0.0	210000	10.40
	6270.0	507.51	398580.9	611.7	80769	

Additional static properties of cross section

Alfa-T [1/°K]	ymin ymax [mm]	zmin zmax [mm]	hymin hzmin [mm]	AK AB [cm2]	MB	Tau-T Tau-B [1/m3]	Tau-Vy Tau-Vz [1/m2]
1.2E-05	-587.0	-561.7		1.045E+02		1.630E+02	2.058E+01
	587.0	556.3		1.174E+02		1.255E+02	1.973E+01

Section values for warping

Wmin[cm2]	Wmax[cm2]	CM[cm6]	CMS[cm4]	ASwyy[cm6]	ASwzz[cm6]	ry[mm]	rz[mm]
-2172.83	2172.831147244363.		1748581.4	-3.71	-24.66	0.0	0.6

Partial cross sections

Mat NoR	A[cm2] It[cm4]	Ay/Az/Ayz [cm2]	Iy/Iz/Iyz [cm4]	ys/zs [mm]	modules [N/mm2]	gam [kN/m]
1	1286.96	607.50	2633627.3	0.0	210000	10.10
	9949.8	507.51	398580.9	609.0	80769	
25	117.40		9.8	0.0	10667	0.29
	539364.9	0.00	0.0	1140.5	4444	
210	0.64	0.00	0.0	0.0	200000	0.00
	2.2	0.00	0.0	1095.5	76923	

Design values of cross section

Mat NoR	A[cm2] It[cm4]	Ay/Az/Ayz [cm2]	Iy/Iz/Iyz [cm4]	ys/zs [mm]	modules [N/mm2]	gam [kN/m]
1	1292.14	607.50	2647934.5	0.0	182609	10.40
	6270.0	507.51	398580.9	611.1	70234	

Design forces and moments
(C/E = characteristic plastic/elastic, D=plast.Design, F=elast. Design)

	N[kN]	Vy[kN]	Vz[kN]	Mt[kNm]	My[kNm]	Mz[kNm]	y[mm]	z[mm]	BUCK
C	43145.3	14118.33	11447.23	719.22	18319.32	5240.20	0.1	609.4	c c
C	-78.7				18318.62	0.00	0.0	611.7	COMB
C	-176.1				0.00	5240.29	0.0	0.0	COMB
C	-43497.5	14118.33	11447.23	719.22	-18134.0	-5240.15	-0.1	619.5	
C	-273.5				-18132.4	0.00	0.0	611.7	COMB
C	-176.1				0.00	-5240.29	0.0	0.0	COMB
E	43333.4	9399.84	9801.15	101.22	15816.16	3296.90	0.0	611.7	
E	-43333.4	9399.84	9801.15	101.22	-15816.2	-3296.90	0.0	611.7	
D	37517.7	12276.81	9914.81	602.34	15891.77	4546.20	0.1	609.6	
D	-64.9				15891.34	0.00	0.0	611.7	COMB
D	-117.4				0.00	4546.29	0.0	0.0	COMB
D	-37752.5	12276.81	9914.81	602.34	-15768.0	-4546.17	-0.1	617.3	
D	-169.9				-15767.2	0.00	0.0	611.7	COMB
D	-117.4				0.00	-4546.29	0.0	0.0	COMB

SOFiSTiK AG - www.sofistik.de

Composite bridge 38+50+38, b=14.25m, 2x2HL1100R HISTAR460 , slab 0.30m C30/37

Design forces and moments
(C/E = characteristic plastic/elastic, D=plast.Design, F=elast. Design)

	N[kN]	Vy[kN]	Vz[kN]	Mt[kNm]	My[kNm]	Mz[kNm]	y[mm]	z[mm]	BUCK
F	37681.3	8173.78	8522.74	67.48	13753.18	2866.87	0.0	611.7	
F	-37681.3	8173.78	8522.74	67.48	-13753.2	-2866.87	0.0	611.7	

Additional Design Data

M	periphery-O/-I [m2/m]	[m2/m]	deff [mm]	t-min [mm]	t-max [mm]	SMP [o/o]	thet-p [tm2/m]	thet-y [tm2/m]	thet-z [tm2/m]	thet-yz [tm2/m]
	5.410		47.8	32.0	52.0	0.0	0.246	0.215	0.031	
1	5.386		47.8	45.0	52.0	0.0	0.238	0.207	0.031	
25	0.020		1174.0			0.0	0.000	0.000		
**	0.004		32.0			0.0	0.000		0.000	

Cross section No. 360.5 = CS 30 - in-situ conc:C3

Cross section No. 361 - VFT (353)

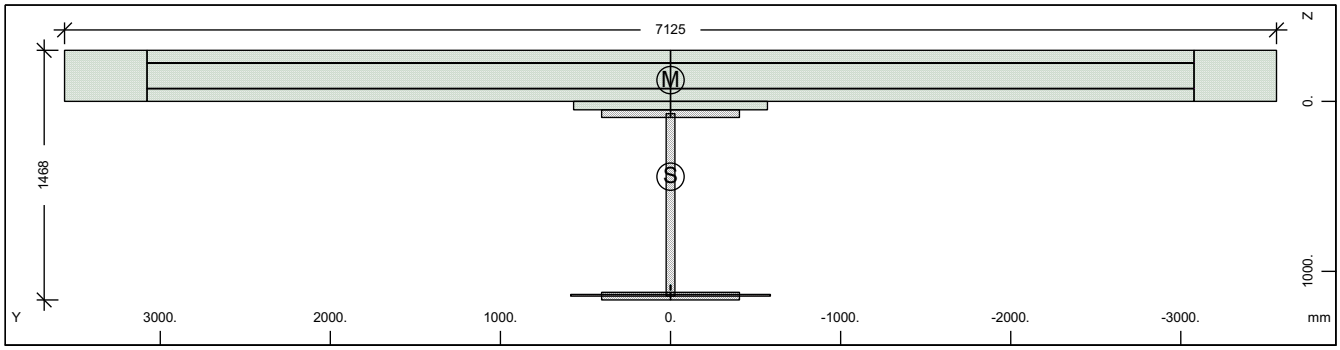

Cross section No. 361 - VFT (353)

Static properties of cross section

Mat NoR	A[cm2] It[cm4]	Ay/Az/Ayz [cm2]	Iy/Iz/Iyz [cm4]	ys/zs [mm]	y/z-sc [mm]	modules [N/mm2]	gam [kN/m]
1	1661.66	327.98	4335106.2	0.0	0.0	210000	65.26
	6270.0	269.37	12020384.	442.9	-124.8	80769	

Additional static properties of cross section

Alfa-T [1/°K]	ymin ymax [mm]	zmin zmax [mm]	hymin hzmin [mm]	AK AB [cm2]	MB	Tau-T Tau-B [1/m3]	Tau-Vy Tau-Vz [1/m2]
1.2E-05	-3562.5	-742.9		1.045E+02		1.630E+02	3.752E+01
	3562.5	725.1		2.206E+04		1.255E+02	4.516E+01

Section values for warping

Wmin[cm2]	Wmax[cm2]	CM[cm6]	CMS[cm4]	ASwyy[cm6]	ASwzz[cm6]	ry[mm]	rz[mm]
-5144.85	5144.854020981972.		544103.2	-41.89	-15.11	0.0	-303.0

Partial cross sections

Mat NoR	A[cm2] It[cm4]	Ay/Az/Ayz [cm2]	Iy/Iz/Iyz [cm4]	ys/zs [mm]	modules [N/mm2]	gam [kN/m]
1	1286.96	0.19	2633627.3	0.0	210000	10.10
	9949.8	107.28	398580.9	609.0	80769	
25	117.40		9.8	0.0	10667	0.29
	539364.9	0.00	0.0	1140.5	4444	
210	0.64	0.00	0.0	0.0	200000	0.00
	2.2	0.00	0.0	1095.5	76923	
31	21945.00	29121.21	170028.4	0.0	0	54.86
	6417251.4	10462.17904880243.		-145.5	0	
300	386.53	344.18	21742.5	0.0	200000	0.00
	12.7	169.84	12202888.	-150.0	76923	

SOFiSTiK AG - www.sofistik.de

Composite bridge 38+50+38, b=14.25m, 2x2HL1100R HISTAR460 , slab 0.30m C30/37

Design values of cross section

Mat NoR	A[cm2] It[cm4]	Ay/Az/Ayz [cm2]	Iy/Iz/Iyz [cm4]	ys/zs [mm]	modules [N/mm2]	gam [kN/m]
1	1660.27	327.98	4328329.9	0.0	182609	65.26
	6270.0	269.03	12020382.	442.4	70234	

Design forces and moments
(C/E = characteristic plastic/elastic, D=plast.Design, F=elast. Design)

	N[kN]	Vy[kN]	Vz[kN]	Mt[kNm]	My[kNm]	Mz[kNm]	y[mm]	z[mm]	BUCK
C	62472.0	61485.85	40247.68	99303.77	36329.82	90822.15	185.7	-98.2	c c
C	-79343.9				68813.80	0.00	0.0	442.9	COMB
C	-33093.6				0.00	92334.27	0.0	0.0	COMB
C	-70459.2	61485.85	40247.68	99303.77	-27853.0	-90756.8	-186.	93.2	
C	13156.7				-30322.7	0.00	0.0	442.9	COMB
C	-33093.6				0.00	-92334.3	0.0	0.0	COMB
E	55665.7	7693.98	6392.42	101.25	20029.42	20505.93	0.0	442.9	
E	-55665.7	7693.98	6392.42	101.25	-20029.4	-20505.9	0.0	442.9	
D	54323.5	46119.16	29651.33	66342.43	30548.96	68195.58	88.8	-75.5	
D	-55636.9				51978.46	0.00	0.0	442.9	COMB
D	-22062.4				0.00	68642.93	0.0	0.0	COMB
D	-59648.3	46119.16	29651.32	66342.43	-24145.1	-68174.7	-88.8	93.1	
D	11512.1				-26317.8	0.00	0.0	442.9	COMB
D	-22062.4				0.00	-68642.9	0.0	0.0	COMB
F	48405.0	6690.41	5558.62	67.50	17416.89	17831.25	0.0	442.9	
F	-48405.0	6690.41	5558.62	67.50	-17416.9	-17831.2	0.0	442.9	

Additional Design Data

M	periphery-O/-I [m2/m]	[m2/m]	deff [mm]	t-min [mm]	t-max [mm]	SMP [o/o]	thet-p [tm2/m]	thet-y [tm2/m]	thet-z [tm2/m]	thet-yz [tm2/m]
	46.560		7.1	3.1	300.0	0.0	23.390	0.737	22.653	
1	5.386		47.8	45.0	52.0	0.0	0.238	0.207	0.031	
25	0.020		1174.0			0.0	0.000	0.000		
**	0.004		32.0			0.0	0.000		0.000	
31	16.530		265.5	50.0	300.0	0.0	22.626	0.004	22.622	
**	24.620		3.1	3.1	3.1	0.0	0.000	0.000	0.000	

Cross section No. 361.1 = CS 1 - steel alone

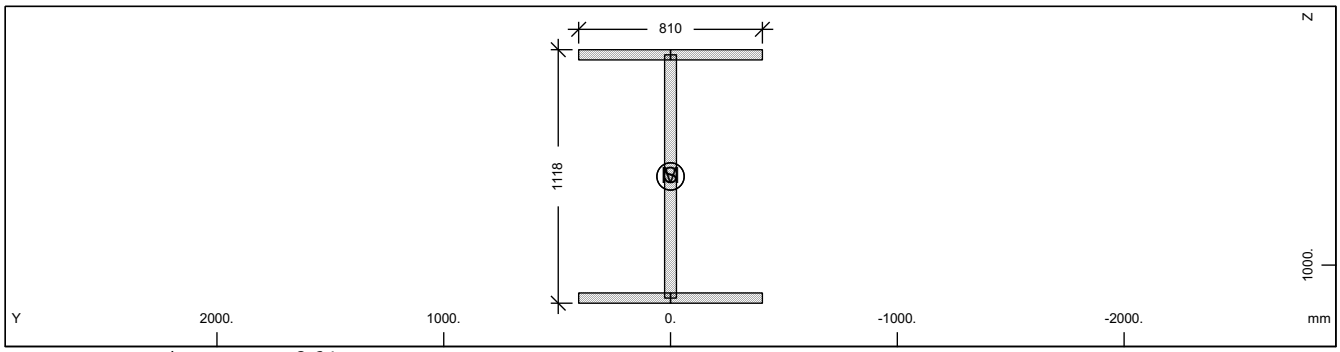

Cross section No. 361

Static properties of cross section

Mat NoR	A[cm2] It[cm4]	Ay/Az/Ayz [cm2]	Iy/Iz/Iyz [cm4]	ys/zs [mm]	modules [N/mm2]	gam [kN/m]
1	1286.96	607.50	2633627.3	0.0	210000	10.10
	6270.0	506.98	398580.9	609.0	80769	

Additional static properties of cross section

Alfa-T [1/°K]	ymin ymax [mm]	zmin zmax [mm]	hymin hzmin [mm]	AK AB [cm2]	MB	Tau-T Tau-B [1/m3]	Tau-Vy Tau-Vz [1/m2]
1.2E-05	-405.0	-559.0		7.359E+02		5.226E+02	2.058E+01
	405.0	559.0				1.255E+02	1.974E+01

SOFiSTiK AG - www.sofistik.de

Composite bridge 38+50+38, b=14.25m, 2x2HL1100R HISTAR460 , slab 0.30m C30/37

Section values for warping

Wmin[cm2]	Wmax[cm2]	CM[cm6]	CMS[cm4]	ASwyy[cm6]	ASwzz[cm6]	ry[mm]	rz[mm]
-2172.83	2172.831147244363.	1748581.4		-0.16	-1.04	0.0	0.0

Design values of cross section

Mat NoR	A[cm2] It[cm4]	Ay/Az/Ayz [cm2]	Iy/Iz/Iyz [cm4]	ys/zs [mm]	modules [N/mm2]	gam [kN/m]
1	1286.96	607.50	2633627.3	0.0	182609	10.10
	6270.0	506.98	398580.9	609.0	70234	

Design forces and moments
(C/E = characteristic plastic/elastic, D=plast.Design, F=elast. Design)

	N[kN]	Vy[kN]	Vz[kN]	Mt[kNm]	My[kNm]	Mz[kNm]	y[mm]	z[mm]	BUCK
C	43113.2	14099.76	10791.64	597.83	18116.18	5188.35	0.0	609.0	c c
C	0.0				0.00	0.00	0.0	0.0	COMB
E	43113.2	9399.84	9796.03	370.08	15782.92	3296.90	0.0	609.0	
D	37489.7	12260.66	9384.03	519.85	15753.20	4511.61	0.0	609.0	
D	0.0				0.00	0.00	0.0	0.0	COMB
F	37489.7	8173.78	8518.29	321.81	13724.27	2866.87	0.0	609.0	

Additional Design Data

M	periphery-O/-I [m2/m]	[m2/m]	deff [mm]	t-min [mm]	t-max [mm]	SMP [o/o]	thet-p [tm2/m]	thet-y [tm2/m]	thet-z [tm2/m]	thet-yz [tm2/m]
	5.386		47.8	45.0	52.0	0.0	0.238	0.207	0.031	

Cross section No. 361.2 = CS 10 - prefab. slab C1

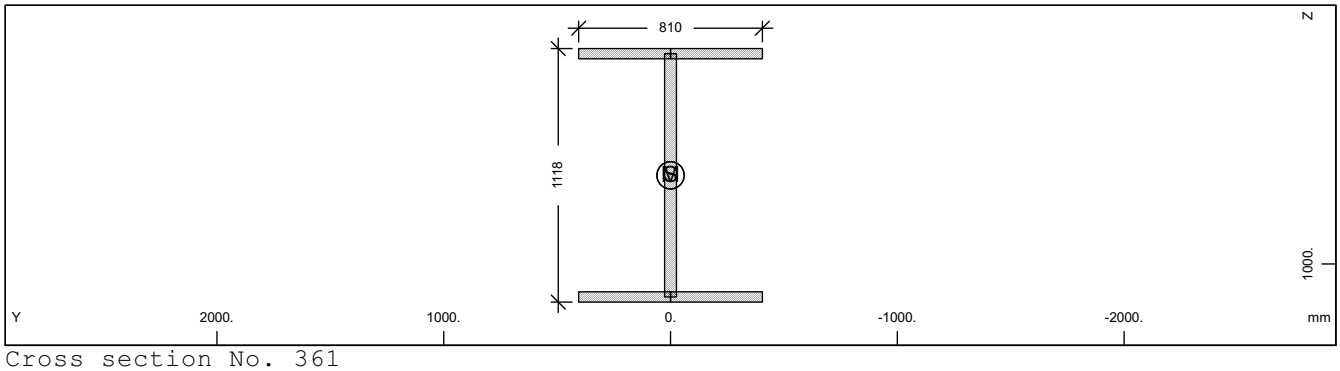

Cross section No. 361

Static properties of cross section

Mat NoR	A[cm2] It[cm4]	Ay/Az/Ayz [cm2]	Iy/Iz/Iyz [cm4]	ys/zs [mm]	modules [N/mm2]	gam [kN/m]
1	1286.96	607.50	2633627.3	0.0	210000	10.10
	6270.0	506.98	398580.9	609.0	80769	

Additional static properties of cross section

Alfa-T [1/°K]	ymin ymax [mm]	zmin zmax [mm]	hymin hzmin [mm]	AK AB [cm2]	MB	Tau-T Tau-B [1/m3]	Tau-Vy Tau-Vz [1/m2]
1.2E-05	-405.0	-559.0		7.359E+02		5.226E+02	2.058E+01
	405.0	559.0				1.255E+02	1.974E+01

Section values for warping

Wmin[cm2]	Wmax[cm2]	CM[cm6]	CMS[cm4]	ASwyy[cm6]	ASwzz[cm6]	ry[mm]	rz[mm]
-2172.83	2172.831147244363.	1748581.4		-0.16	-1.04	0.0	0.0

Design values of cross section

Mat NoR	A[cm2] It[cm4]	Ay/Az/Ayz [cm2]	Iy/Iz/Iyz [cm4]	ys/zs [mm]	modules [N/mm2]	gam [kN/m]
1	1286.96	607.50	2633627.3	0.0	182609	10.10
	6270.0	506.98	398580.9	609.0	70234	

SOFiSTiK AG - www.sofistik.de

Composite bridge 38+50+38, b=14.25m, 2x2HL1100R HISTAR460 , slab 0.30m C30/37

Design forces and moments
(C/E = characteristic plastic/elastic, D=plast.Design, F=elast. Design)

	N[kN]	Vy[kN]	Vz[kN]	Mt[kNm]	My[kNm]	Mz[kNm]	y[mm]	z[mm]	BUCK
C	43113.2	14099.76	10791.64	597.83	18116.18	5188.35	0.0	609.0	c c
C	0.0				0.00	0.00	0.0	0.0	COMB
E	43113.2	9399.84	9796.03	370.08	15782.92	3296.90	0.0	609.0	
D	37489.7	12260.66	9384.03	519.85	15753.20	4511.61	0.0	609.0	
D	0.0				0.00	0.00	0.0	0.0	COMB
F	37489.7	8173.78	8518.29	321.81	13724.27	2866.87	0.0	609.0	

Additional Design Data

M	periphery-O/-I [m2/m]	[m2/m]	deff [mm]	t-min [mm]	t-max [mm]	SMP [o/o]	thet-p [tm2/m]	thet-y [tm2/m]	thet-z [tm2/m]	thet-yz [tm2/m]
	5.386		47.8	45.0	52.0	0.0	0.238	0.207	0.031	

Cross section No. 361.3 = CS 20 - in-situ conc:C2

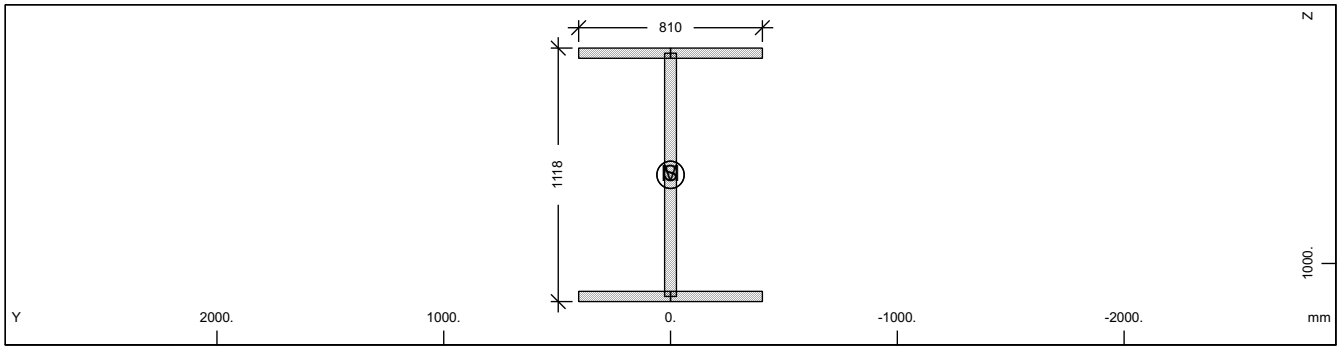

Cross section No. 361

Static properties of cross section

Mat NoR	A[cm2] It[cm4]	Ay/Az/Ayz [cm2]	Iy/Iz/Iyz [cm4]	ys/zs [mm]	modules [N/mm2]	gam [kN/m]
1	1286.96	607.50	2633627.3	0.0	210000	10.10
	6270.0	506.98	398580.9	609.0	80769	

Additional static properties of cross section

Alfa-T [1/°K]	ymin ymax [mm]	zmin zmax [mm]	hymin hzmin [mm]	AK AB [cm2]	MB	Tau-T Tau-B [1/m3]	Tau-Vy Tau-Vz [1/m2]
1.2E-05	-405.0	-559.0		7.359E+02		5.226E+02	2.058E+01
	405.0	559.0				1.255E+02	1.974E+01

Section values for warping

Wmin[cm2]	Wmax[cm2]	CM[cm6]	CMS[cm4]	ASwyy[cm6]	ASwzz[cm6]	ry[mm]	rz[mm]
-2172.83	2172.831147244363.		1748581.4	-0.16	-1.04	0.0	0.0

Design values of cross section

Mat NoR	A[cm2] It[cm4]	Ay/Az/Ayz [cm2]	Iy/Iz/Iyz [cm4]	ys/zs [mm]	modules [N/mm2]	gam [kN/m]
1	1286.96	607.50	2633627.3	0.0	182609	10.10
	6270.0	506.98	398580.9	609.0	70234	

Design forces and moments
(C/E = characteristic plastic/elastic, D=plast.Design, F=elast. Design)

	N[kN]	Vy[kN]	Vz[kN]	Mt[kNm]	My[kNm]	Mz[kNm]	y[mm]	z[mm]	BUCK
C	43113.2	14099.76	10791.64	597.83	18116.18	5188.35	0.0	609.0	c c
C	0.0				0.00	0.00	0.0	0.0	COMB
E	43113.2	9399.84	9796.03	370.08	15782.92	3296.90	0.0	609.0	
D	37489.7	12260.66	9384.03	519.85	15753.20	4511.61	0.0	609.0	
D	0.0				0.00	0.00	0.0	0.0	COMB
F	37489.7	8173.78	8518.29	321.81	13724.27	2866.87	0.0	609.0	

SOFiSTiK AG - www.sofistik.de

Composite bridge 38+50+38, b=14.25m, 2x2HL1100R HISTAR460 , slab 0.30m C30/37

Additional Design Data

M	periphery-O/-I [m2/m]	[m2/m]	deff [mm]	t-min [mm]	t-max [mm]	SMP [o/o]	thet-p [tm2/m]	thet-y [tm2/m]	thet-z [tm2/m]	thet-yz [tm2/m]
	5.386		47.8	45.0	52.0	0.0	0.238	0.207	0.031	

Cross section No. 361.4 = CS 21 - reinf active:C2

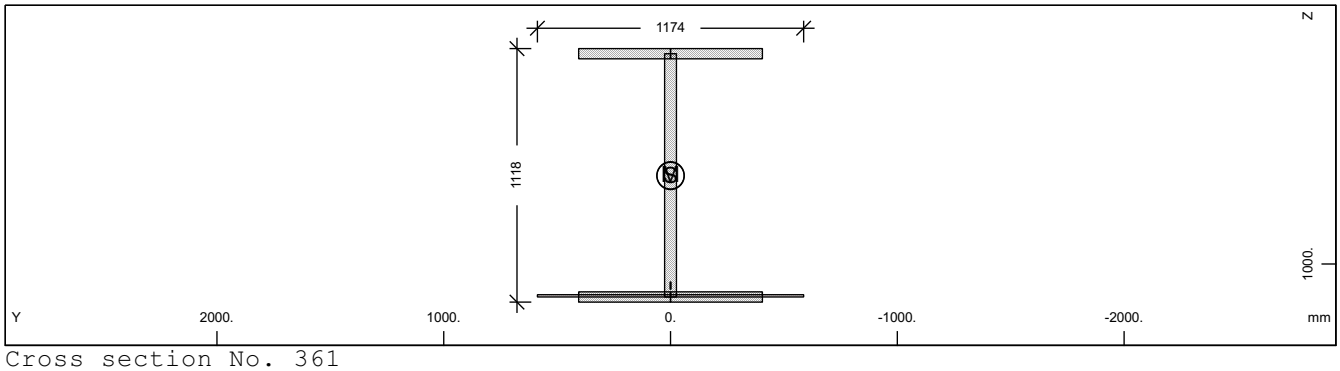

Cross section No. 361

Static properties of cross section

Mat NoR	A[cm2] It[cm4]	Ay/Az/Ayz [cm2]	Iy/Iz/Iyz [cm4]	ys/zs [mm]	modules [N/mm2]	gam [kN/m]
1	1293.54	607.50	2651829.8	0.0	210000	10.40
	6270.0	507.51	398580.9	611.7	80769	

Additional static properties of cross section

Alfa-T [1/°K]	ymin ymax [mm]	zmin zmax [mm]	hymin hzmin [mm]	AK AB [cm2]	MB	Tau-T Tau-B [1/m3]	Tau-Vy Tau-Vz [1/m2]
1.2E-05	-587.0	-561.7		1.045E+02		1.630E+02	2.058E+01
	587.0	556.3		1.174E+02		1.255E+02	1.973E+01

Section values for warping

Wmin[cm2]	Wmax[cm2]	CM[cm6]	CMS[cm4]	ASwyy[cm6]	ASwzz[cm6]	ry[mm]	rz[mm]
-2172.83	2172.831	147244363.	1748581.4	-3.71	-24.66	0.0	0.6

Partial cross sections

Mat NoR	A[cm2] It[cm4]	Ay/Az/Ayz [cm2]	Iy/Iz/Iyz [cm4]	ys/zs [mm]	modules [N/mm2]	gam [kN/m]
1	1286.96	607.50	2633627.3	0.0	210000	10.10
	9949.8	507.51	398580.9	609.0	80769	
25	117.40		9.8	0.0	10667	0.29
	539364.9	0.00	0.0	1140.5	4444	
210	0.64	0.00	0.0	0.0	200000	0.00
	2.2	0.00	0.0	1095.5	76923	

Design values of cross section

Mat NoR	A[cm2] It[cm4]	Ay/Az/Ayz [cm2]	Iy/Iz/Iyz [cm4]	ys/zs [mm]	modules [N/mm2]	gam [kN/m]
1	1292.14	607.50	2647934.5	0.0	182609	10.40
	6270.0	507.51	398580.9	611.1	70234	

Design forces and moments
(C/E = characteristic plastic/elastic, D=plast.Design, F=elast. Design)

	N[kN]	Vy[kN]	Vz[kN]	Mt[kNm]	My[kNm]	Mz[kNm]	y[mm]	z[mm]	BUCK
C	43145.3	14118.33	11447.23	719.22	18319.32	5240.20	0.1	609.4	c c
C	-78.7				18318.62	0.00	0.0	611.7	COMB
C	-176.1				0.00	5240.29	0.0	0.0	COMB
C	-43497.5	14118.33	11447.23	719.22	-18134.0	-5240.15	-0.1	619.5	
C	-273.5				-18132.4	0.00	0.0	611.7	COMB
C	-176.1				0.00	-5240.29	0.0	0.0	COMB
E	43333.4	9399.84	9801.15	101.22	15816.16	3296.90	0.0	611.7	
E	-43333.4	9399.84	9801.15	101.22	-15816.2	-3296.90	0.0	611.7	
D	37517.7	12276.81	9914.81	602.34	15891.77	4546.20	0.1	609.6	

SOFiSTiK AG - www.sofistik.de

Composite bridge 38+50+38, b=14.25m, 2x2HL1100R HISTAR460 , slab 0.30m C30/37

Design forces and moments
(C/E = characteristic plastic/elastic, D=plast.Design, F=elast. Design)

	N[kN]	Vy[kN]	Vz[kN]	Mt[kNm]	My[kNm]	Mz[kNm]	y[mm]	z[mm]	BUCK
D	-64.9				15891.34	0.00	0.0	611.7	COMB
D	-117.4				0.00	4546.29	0.0	0.0	COMB
D	-37752.5	12276.81	9914.81	602.34	-15768.0	-4546.17	-0.1	617.3	
D	-169.9				-15767.2	0.00	0.0	611.7	COMB
D	-117.4				0.00	-4546.29	0.0	0.0	COMB
F	37681.3	8173.78	8522.74	67.48	13753.18	2866.87	0.0	611.7	
F	-37681.3	8173.78	8522.74	67.48	-13753.2	-2866.87	0.0	611.7	

Additional Design Data

M	periphery-O/-I [m2/m]	[m2/m]	deff [mm]	t-min [mm]	t-max [mm]	SMP [o/o]	thet-p [tm2/m]	thet-y [tm2/m]	thet-z [tm2/m]	thet-yz [tm2/m]
	5.410		47.8	32.0	52.0	0.0	0.246	0.215	0.031	
1	5.386		47.8	45.0	52.0	0.0	0.238	0.207	0.031	
25	0.020		1174.0			0.0	0.000	0.000		
**	0.004		32.0			0.0	0.000		0.000	

Cross section No. 361.5 = CS 30 - in-situ conc:C3

Cross section No. 362 - VFT (353)

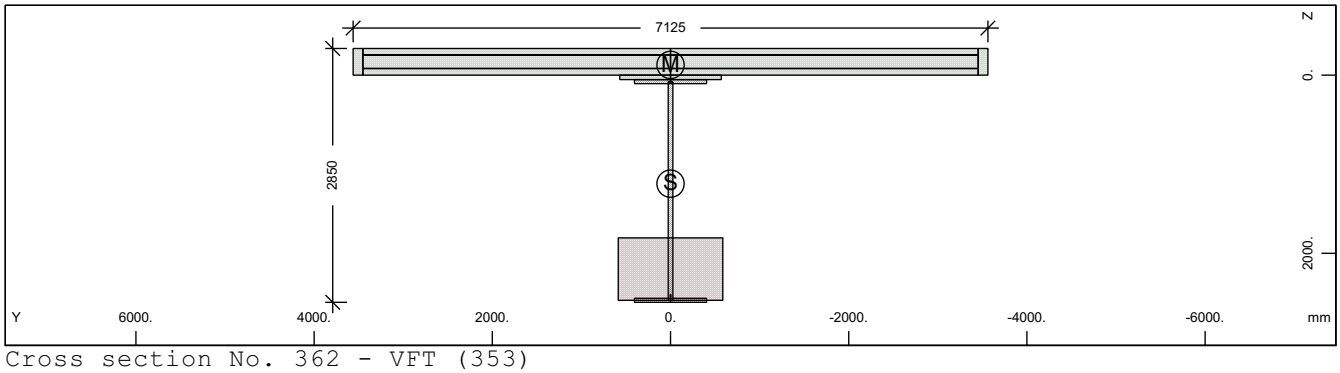

Cross section No. 362 - VFT (353)

Static properties of cross section

Mat NoR	A[cm2] It[cm4]	Ay/Az/Ayz [cm2]	Iy/Iz/Iyz [cm4]	ys/zs [mm]	y/z-sc [mm]	modules [N/mm2]	gam [kN/m]
1	2837.20	360.96	29307777.	0.0	0.0	210000	91.18
	6270.0	859.20	16807531.	1218.4	-115.6	80769	

Additional static properties of cross section

Alfa-T [1/°K]	ymin ymax [mm]	zmin zmax [mm]	hymin hzmin [mm]	AK AB [cm2]	MB	Tau-T Tau-B [1/m3]	Tau-Vy Tau-Vz [1/m2]
1.2E-05	-3562.5	-1518.4		5.530E+03		3.081E+00	3.377E+01
	3562.5	1331.6		3.017E+04		1.255E+02	1.619E+01

Section values for warping

Wmin[cm2]	Wmax[cm2]	CM[cm6]	CMS[cm4]	ASwyy[cm6]	ASwzz[cm6]	ry[mm]	rz[mm]
-10704.57	10704.57	1.511E+10	3656530.0	278.24	485.18	0.0	1827.2

Partial cross sections

Mat NoR	A[cm2] It[cm4]	Ay/Az/Ayz [cm2]	Iy/Iz/Iyz [cm4]	ys/zs [mm]	modules [N/mm2]	gam [kN/m]
1	2005.59	0.12	17395803.	0.0	210000	15.74
	16427.1	587.51	398580.9	1300.0	80769	
25	8229.60		3369913.3	0.0	10667	20.57
	37808869.	75.34	0.0	2177.0	4444	
210	0.64	0.00	0.0	0.0	200000	0.00
	2.2	0.00	0.0	2477.5	76923	
31	21945.00	18040.50	170028.4	0.0	0	54.86
	6417251.4	12406.34	904880243.	-145.5	0	

SOFiSTiK AG - www.sofistik.de

Composite bridge 38+50+38, b=14.25m, 2x2HL1100R HISTAR460 , slab 0.30m C30/37

300	433.63	378.88	24391.9	0.0	200000	0.00
	14.3	280.39	17229392.	-150.0	76923	

Design values of cross section

Mat	A[cm2]	Ay/Az/Ayz	Iy/Iz/Iyz	ys/zs	modules	gam
NoR	It[cm4]	[cm2]	[cm4]	[mm]	[N/mm2]	[kN/m]
1	2739.67	360.96	28339660.	0.0	182609	91.18
	6270.0	857.73	16807529.	1184.3	70234	

Design forces and moments
(C/E = characteristic plastic/elastic, D=plast.Design, F=elast. Design)

	N[kN]	Vy[kN]	Vz[kN]	Mt[kNm]	My[kNm]	Mz[kNm]	y[mm]	z[mm]	BUCK
C	88901.3	62845.52	67532.07	107524.4	99504.70	103961.3	26.0	-73.8	c c
C	-84641.7				175839.5	0.00	0.0	1218.	COMB
C	-45261.9				0.00	103907.7	0.0	0.0	COMB
C	-166225.	62845.52	67532.06	107524.3	-109220.	-103321.	-26.0	1387.	
C	-5882.1				-109717.	0.00	0.0	1218.	COMB
C	-45261.9				0.00	-103908.	0.0	0.0	COMB
E	95046.3	8548.01	17826.33	5355.85	73732.12	25558.15	0.0	1218.	
E	-95046.3	8548.01	17826.33	5355.85	-73732.1	-25558.1	0.0	1218.	
D	77305.4	47301.47	50661.06	71896.58	85225.59	78009.63	20.0	-22.1	
D	-60243.7				134685.8	0.00	0.0	1218.	COMB
D	-30174.6				0.00	77982.18	0.0	0.0	COMB
D	-128855.	47301.47	50661.06	71896.57	-90603.9	-77680.9	-20.0	1222.	
D	-105.5				-90604.1	0.00	0.0	1218.	COMB
D	-30174.6				0.00	-77982.2	0.0	0.0	COMB
F	82649.0	7433.05	15501.16	3570.57	64114.88	22224.48	0.0	1218.	
F	-82649.0	7433.05	15501.16	3570.57	-64114.9	-22224.5	0.0	1218.	

Additional Design Data

M	periphery-O/-I		deff	t-min	t-max	SMP	thet-p	thet-y	thet-z	thet-yz
	[m2/m]	[m2/m]	[mm]	[mm]	[mm]	[o/o]	[tm2/m]	[tm2/m]	[tm2/m]	[tm2/m]
	53.706		10.6	3.1	701.0	0.0	33.037	10.384	22.653	
1	8.150		49.2	45.0	52.0	0.0	1.397	1.366	0.031	
25	1.402		1174.0			0.0	0.084	0.084		
**	0.004		32.0			0.0	0.000		0.000	
31	16.530		265.5	50.0	300.0	0.0	22.626	0.004	22.622	
**	27.620		3.1	3.1	3.1	0.0	0.000	0.000	0.000	

Cross section No. 362.1 = CS 1 - steel alone

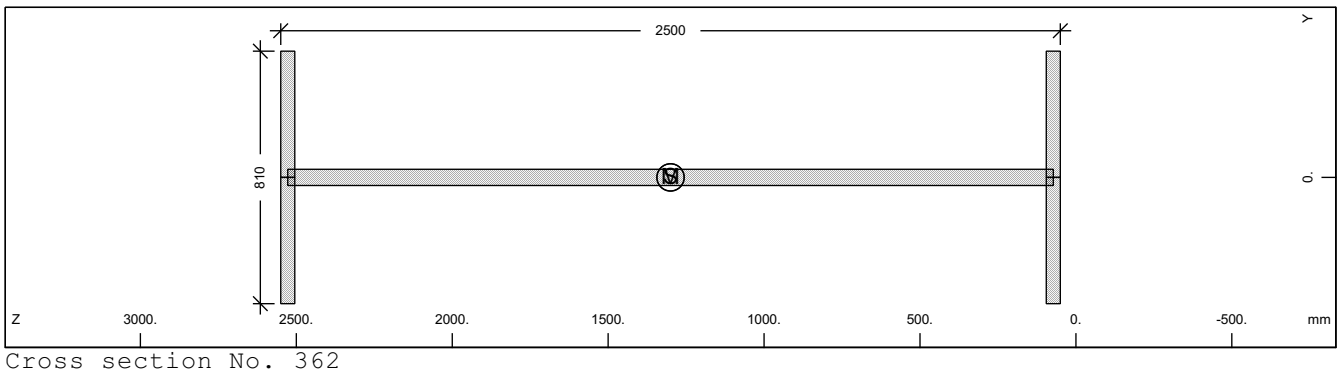

Cross section No. 362

Static properties of cross section

Mat	A[cm2]	Ay/Az/Ayz	Iy/Iz/Iyz	ys/zs	modules	gam
NoR	It[cm4]	[cm2]	[cm4]	[mm]	[N/mm2]	[kN/m]
1	2005.59	607.50	17395803.	0.0	210000	15.74
	6270.0	1212.91	398580.9	1300.0	80769	

SOFiSTiK AG - www.sofistik.de

Composite bridge 38+50+38, b=14.25m, 2x2HL1100R HISTAR460 , slab 0.30m C30/37

Additional static properties of cross section

Alfa-T	ymin ymax	zmin zmax	hymin hzmin	AK AB	MB	Tau-T Tau-B	Tau-Vy Tau-Vz
[1/°K]	[mm]	[mm]	[mm]	[cm2]		[1/m3]	[1/m2]
1.2E-05	-405.0	-1250.0		1.215E+03		3.165E+02	2.058E+01
	405.0	1250.0				1.255E+02	9.277E+00

Section values for warping

Wmin[cm2]	Wmax[cm2]	CM[cm6]	CMS[cm4]	ASwyy[cm6]	ASwzz[cm6]	ry[mm]	rz[mm]
-4971.35	4971.356005582889.		9153455.6	-6.31	-275.54	0.0	0.0

Design values of cross section

Mat NoR	A[cm2] It[cm4]	Ay/Az/Ayz [cm2]	Iy/Iz/Iyz [cm4]	ys/zs [mm]	modules [N/mm2]	gam [kN/m]
1	2005.59	607.50	17395803.	0.0	182609	15.74
	6270.0	1212.91	398580.9	1300.0	70234	

Design forces and moments
(C/E = characteristic plastic/elastic, D=plast.Design, F=elast. Design)

	N[kN]	Vy[kN]	Vz[kN]	Mt[kNm]	My[kNm]	Mz[kNm]	y[mm]	z[mm]	BUCK
C	67187.4	14099.76	24690.90	959.21	56224.69	5501.31	0.0	1300.	c c
C	0.0				0.00	0.00	0.0	0.0	COMB
E	67187.4	9399.84	20848.74	611.00	46620.96	3296.90	0.0	1300.	
D	58423.8	12260.66	21470.35	834.09	48891.04	4783.75	0.0	1300.	
D	0.0				0.00	0.00	0.0	0.0	COMB
F	58423.8	8173.78	18129.34	531.31	40539.97	2866.87	0.0	1300.	

Additional Design Data

M	periphery-O/-I [m2/m]	[m2/m]	deff [mm]	t-min [mm]	t-max [mm]	SMP [o/o]	thet-p [tm2/m]	thet-y [tm2/m]	thet-z [tm2/m]	thet-yz [tm2/m]
	8.150		49.2	45.0	52.0	0.0	1.397	1.366	0.031	

Cross section No. 362.2 = CS 10 - prefab. slab C1

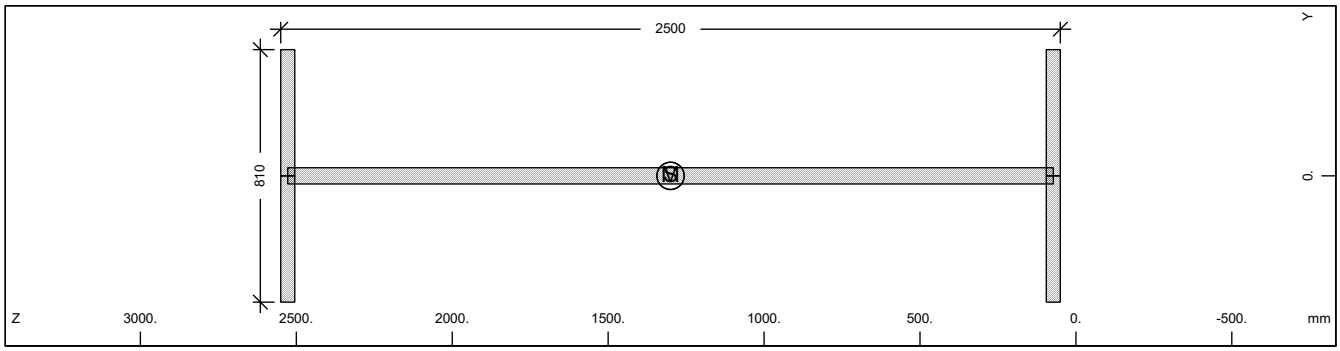

Cross section No. 362

Static properties of cross section

Mat NoR	A[cm2] It[cm4]	Ay/Az/Ayz [cm2]	Iy/Iz/Iyz [cm4]	ys/zs [mm]	modules [N/mm2]	gam [kN/m]
1	2005.59	607.50	17395803.	0.0	210000	15.74
	6270.0	1212.91	398580.9	1300.0	80769	

Additional static properties of cross section

Alfa-T	ymin ymax	zmin zmax	hymin hzmin	AK AB	MB	Tau-T Tau-B	Tau-Vy Tau-Vz
[1/°K]	[mm]	[mm]	[mm]	[cm2]		[1/m3]	[1/m2]
1.2E-05	-405.0	-1250.0		1.215E+03		3.165E+02	2.058E+01
	405.0	1250.0				1.255E+02	9.277E+00

Section values for warping

Wmin[cm2]	Wmax[cm2]	CM[cm6]	CMS[cm4]	ASwyy[cm6]	ASwzz[cm6]	ry[mm]	rz[mm]
-4971.35	4971.356005582889.		9153455.6	-6.31	-275.54	0.0	0.0

SOFiSTiK AG - www.sofistik.de

Composite bridge 38+50+38, b=14.25m, 2x2HL1100R HISTAR460 , slab 0.30m C30/37

Design values of cross section

Mat NoR	A[cm2] It[cm4]	Ay/Az/Ayz [cm2]	Iy/Iz/Iyz [cm4]	ys/zs [mm]	modules [N/mm2]	gam [kN/m]
1	2005.59	607.50	17395803.	0.0	182609	15.74
	6270.0	1212.91	398580.9	1300.0	70234	

Design forces and moments
(C/E = characteristic plastic/elastic, D=plast.Design, F=elast. Design)

	N[kN]	Vy[kN]	Vz[kN]	Mt[kNm]	My[kNm]	Mz[kNm]	y[mm]	z[mm]	BUCK
C	67187.4	14099.76	24690.90	959.21	56224.69	5501.31	0.0	1300.	c c
C	0.0				0.00	0.00	0.0	0.0	COMB
E	67187.4	9399.84	20848.74	611.00	46620.96	3296.90	0.0	1300.	
D	58423.8	12260.66	21470.35	834.09	48891.04	4783.75	0.0	1300.	
D	0.0				0.00	0.00	0.0	0.0	COMB
F	58423.8	8173.78	18129.34	531.31	40539.97	2866.87	0.0	1300.	

Additional Design Data

M	periphery-O/-I [m2/m] [m2/m]	deff [mm]	t-min [mm]	t-max [mm]	SMP [o/o]	thet-p [tm2/m]	thet-y [tm2/m]	thet-z [tm2/m]	thet-yz [tm2/m]
	8.150	49.2	45.0	52.0	0.0	1.397	1.366	0.031	

Cross section No. 362.3 = CS 20 - in-situ conc:C2

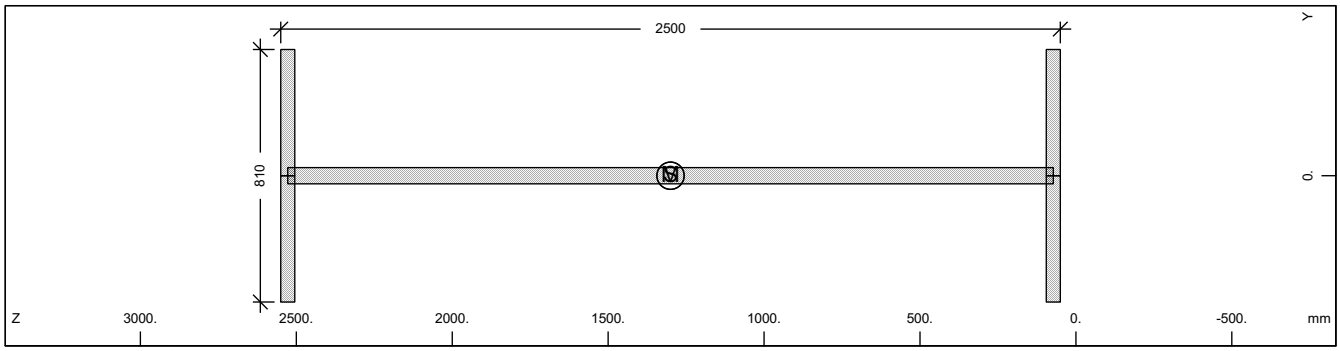

Cross section No. 362

Static properties of cross section

Mat NoR	A[cm2] It[cm4]	Ay/Az/Ayz [cm2]	Iy/Iz/Iyz [cm4]	ys/zs [mm]	modules [N/mm2]	gam [kN/m]
1	2005.59	607.50	17395803.	0.0	210000	15.74
	6270.0	1212.91	398580.9	1300.0	80769	

Additional static properties of cross section

Alfa-T [1/°K]	ymin ymax [mm]	zmin zmax [mm]	hymin hzmin [mm]	AK AB [cm2]	MB	Tau-T Tau-B [1/m3]	Tau-Vy Tau-Vz [1/m2]
1.2E-05	-405.0	-1250.0		1.215E+03		3.165E+02	2.058E+01
	405.0	1250.0				1.255E+02	9.277E+00

Section values for warping

Wmin[cm2]	Wmax[cm2]	CM[cm6]	CMS[cm4]	ASwyy[cm6]	ASwzz[cm6]	ry[mm]	rz[mm]
-4971.35	4971.356005582889.		9153455.6	-6.31	-275.54	0.0	0.0

Design values of cross section

Mat NoR	A[cm2] It[cm4]	Ay/Az/Ayz [cm2]	Iy/Iz/Iyz [cm4]	ys/zs [mm]	modules [N/mm2]	gam [kN/m]
1	2005.59	607.50	17395803.	0.0	182609	15.74
	6270.0	1212.91	398580.9	1300.0	70234	

Design forces and moments
(C/E = characteristic plastic/elastic, D=plast.Design, F=elast. Design)

	N[kN]	Vy[kN]	Vz[kN]	Mt[kNm]	My[kNm]	Mz[kNm]	y[mm]	z[mm]	BUCK
C	67187.4	14099.76	24690.90	959.21	56224.69	5501.31	0.0	1300.	c c
C	0.0				0.00	0.00	0.0	0.0	COMB
E	67187.4	9399.84	20848.74	611.00	46620.96	3296.90	0.0	1300.	

SOFiSTiK AG - www.sofistik.de

Composite bridge 38+50+38, b=14.25m, 2x2HL1100R HISTAR460 , slab 0.30m C30/37

Design forces and moments
(C/E = characteristic plastic/elastic, D=plast.Design, F=elast. Design)

	N[kN]	Vy[kN]	Vz[kN]	Mt[kNm]	My[kNm]	Mz[kNm]	y[mm]	z[mm]	BUCK
D	58423.8	12260.66	21470.35	834.09	48891.04	4783.75	0.0	1300.	
D	0.0				0.00	0.00	0.0	0.0	COMB
F	58423.8	8173.78	18129.34	531.31	40539.97	2866.87	0.0	1300.	

Additional Design Data

M	periphery-O/-I [m2/m]	[m2/m]	deff [mm]	t-min [mm]	t-max [mm]	SMP [o/o]	thet-p [tm2/m]	thet-y [tm2/m]	thet-z [tm2/m]	thet-yz [tm2/m]
	8.150		49.2	45.0	52.0	0.0	1.397	1.366	0.031	

Cross section No. 362.4 = CS 21 - reinf active:C2

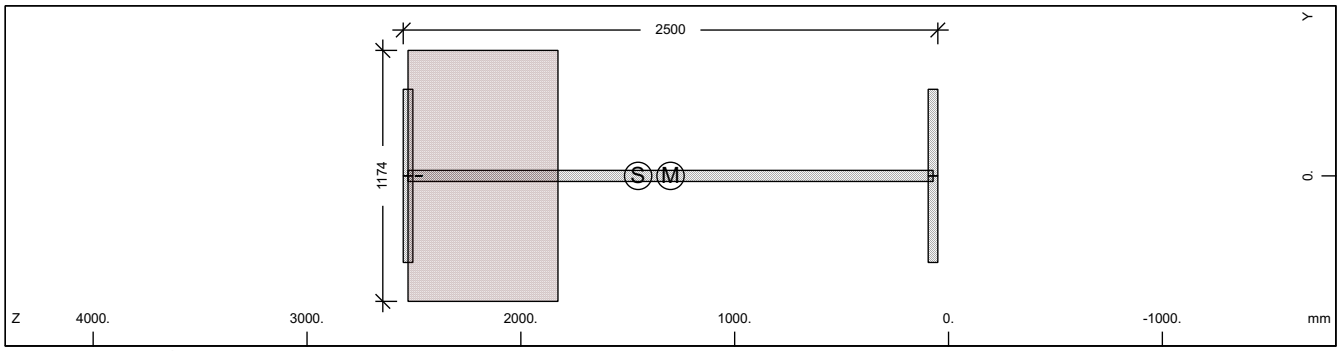

Cross section No. 362

Static properties of cross section

Mat NoR	A[cm2] It[cm4]	Ay/Az/Ayz [cm2]	Iy/Iz/Iyz [cm4]	ys/zs [mm]	modules [N/mm2]	gam [kN/m]
1	2424.22	607.50	20233953.	0.0	210000	36.32
	6270.0	1117.95	398580.9	1451.5	80769	

Additional static properties of cross section

Alfa-T [1/°K]	ymin ymax [mm]	zmin zmax [mm]	hymin hzmin [mm]	AK AB [cm2]	MB	Tau-T Tau-B [1/m3]	Tau-Vy Tau-Vz [1/m2]
1.2E-05	-587.0	-1401.5		5.530E+03		3.081E+00	2.058E+01
	587.0	1098.5		8.230E+03		1.255E+02	9.477E+00

Section values for warping

Wmin[cm2]	Wmax[cm2]	CM[cm6]	CMS[cm4]	ASwyy[cm6]	ASwzz[cm6]	ry[mm]	rz[mm]
-4971.35	4971.356005582889.		9153455.6	-2.44	-123.93	0.0	3.4

Partial cross sections

Mat NoR	A[cm2] It[cm4]	Ay/Az/Ayz [cm2]	Iy/Iz/Iyz [cm4]	ys/zs [mm]	modules [N/mm2]	gam [kN/m]
1	2005.59	607.50	17395803.	0.0	210000	15.74
	16427.1	1110.01	398580.9	1300.0	80769	
25	8229.60		3369913.3	0.0	10667	20.57
	37808869.	144.27	0.0	2177.0	4444	
210	0.64	0.00	0.0	0.0	200000	0.00
	2.2	0.00	0.0	2477.5	76923	

Design values of cross section

Mat NoR	A[cm2] It[cm4]	Ay/Az/Ayz [cm2]	Iy/Iz/Iyz [cm4]	ys/zs [mm]	modules [N/mm2]	gam [kN/m]
1	2326.68	607.50	19659141.	0.0	182609	36.32
	6270.0	1116.09	398580.9	1421.1	70234	

Design forces and moments
(C/E = characteristic plastic/elastic, D=plast.Design, F=elast. Design)

	N[kN]	Vy[kN]	Vz[kN]	Mt[kNm]	My[kNm]	Mz[kNm]	y[mm]	z[mm]	BUCK
C	67219.5	14118.33	38731.62	8937.67	56262.54	9260.27	7.3	1301.	c c
C	-5246.8				56657.61	0.00	0.0	1452.	COMB

SOFiSTiK AG - www.sofistik.de

Composite bridge 38+50+38, b=14.25m, 2x2HL1100R HISTAR460 , slab 0.30m C30/37

Design forces and moments
(C/E = characteristic plastic/elastic, D=plast.Design, F=elast. Design)

	N[kN]	Vy[kN]	Vz[kN]	Mt[kNm]	My[kNm]	Mz[kNm]	y[mm]	z[mm]	BUCK
C	-12344.4				0.00	9124.65	0.0	0.0	COMB
C	-91908.4	14118.33	38731.62	8937.67	-69437.6	-9080.56	-7.1	1918.	
C	-19442.0				-74568.8	0.00	0.0	1452.	COMB
C	-12344.4				0.00	-9124.65	0.0	0.0	COMB
E	81211.3	9399.84	20409.62	5355.81	48364.66	3296.90	0.0	1452.	
E	-81211.3	9399.84	20409.62	5355.81	-48364.7	-3296.90	0.0	1452.	
D	58451.8	12276.81	30924.54	6154.63	48923.94	7267.16	5.5	1301.	
D	-4562.4				49267.49	0.00	0.0	1452.	COMB
D	-8229.6				0.00	7199.36	0.0	0.0	COMB
D	-74911.0	12276.81	30924.54	6154.63	-52380.0	-7176.76	-5.5	1764.	
D	-11896.8				-61208.3	0.00	0.0	1452.	COMB
D	-8229.6				0.00	-7199.36	0.0	0.0	COMB
F	70618.5	8173.78	17747.50	3570.54	42056.23	2866.87	0.0	1452.	
F	-70618.5	8173.78	17747.50	3570.54	-42056.2	-2866.87	0.0	1452.	

Additional Design Data

M	periphery-O/-I [m2/m]	[m2/m]	deff [mm]	t-min [mm]	t-max [mm]	SMP [o/o]	thet-p [tm2/m]	thet-y [tm2/m]	thet-z [tm2/m]	thet-yz [tm2/m]
	9.556		50.7	32.0	701.0	0.0	2.167	2.136	0.031	
1	8.150		49.2	45.0	52.0	0.0	1.397	1.366	0.031	
25	1.402		1174.0			0.0	0.084	0.084		
**	0.004		32.0			0.0	0.000		0.000	

Cross section No. 362.5 = CS 30 - in-situ conc:C3

Cross section No. 363 - VFT (353)

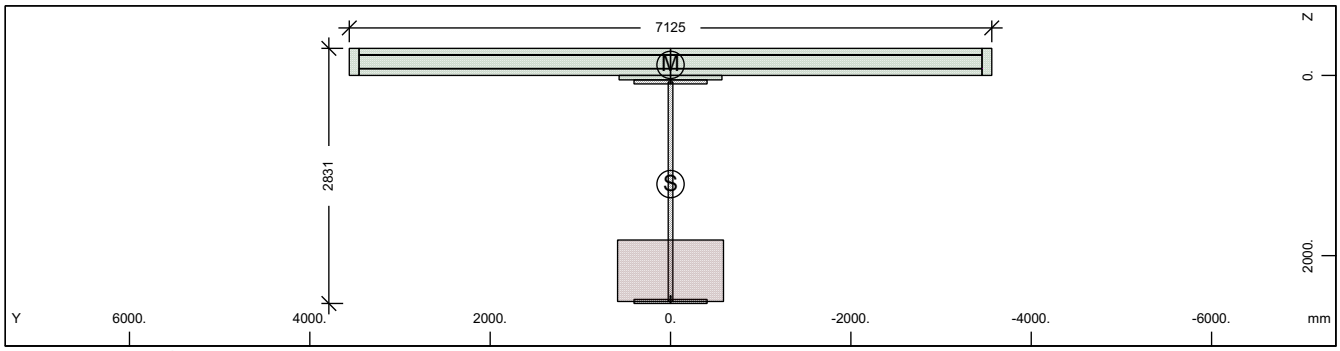

Cross section No. 363 - VFT (353)

Static properties of cross section

Mat NoR	A[cm2] It[cm4]	Ay/Az/Ayz [cm2]	Iy/Iz/Iyz [cm4]	ys/zs [mm]	y/z-sc [mm]	modules [N/mm2]	gam [kN/m]
1	2815.72	361.14	28756425.	0.0	0.0	210000	90.53
	6270.0	850.93	16835976.	1205.7	-115.9	80769	

Additional static properties of cross section

Alfa-T [1/°K]	ymin ymax [mm]	zmin zmax [mm]	hymin hzmin [mm]	AK AB [cm2]	MB	Tau-T Tau-B [1/m3]	Tau-Vy Tau-Vz [1/m2]
1.2E-05	-3562.5	-1505.7		5.377E+03		3.168E+00	3.375E+01
	3562.5	1324.8		2.995E+04		1.255E+02	1.637E+01

Section values for warping

Wmin[cm2]	Wmax[cm2]	CM[cm6]	CMS[cm4]	ASwyy[cm6]	ASwzz[cm6]	ry[mm]	rz[mm]
-10626.93	10626.93	1.491E+10	3566856.7	-118.70	-202.75	0.0	1800.9

SOFiSTiK AG - www.sofistik.de

Composite bridge 38+50+38, b=14.25m, 2x2HL1100R HISTAR460 , slab 0.30m C30/37

Partial cross sections

Mat NoR	A[cm2] It[cm4]	Ay/Az/Ayz [cm2]	Iy/Iz/Iyz [cm4]	ys/zs [mm]	modules [N/mm2]	gam [kN/m]
1	1995.48	0.12	17071144.	0.0	210000	15.66
	16335.9	578.97	398580.9	1290.3	80769	
25	8001.18		3097020.5	0.0	10667	20.00
	36759433.	71.38	0.0	2167.3	4444	
210	0.64	0.00	0.0	0.0	200000	0.00
	2.2	0.00	0.0	2458.0	76923	
31	21945.00	17997.44	170028.4	0.0	0	54.86
	6417251.4	12406.91	904880243.	-145.5	0	
300	433.88	379.07	24406.0	0.0	200000	0.00
	14.3	280.90	17259261.	-150.0	76923	

Design values of cross section

Mat NoR	A[cm2] It[cm4]	Ay/Az/Ayz [cm2]	Iy/Iz/Iyz [cm4]	ys/zs [mm]	modules [N/mm2]	gam [kN/m]
1	2720.89	361.14	27812430.	0.0	182609	90.53
	6270.0	849.51	16835976.	1172.2	70234	

Design forces and moments
(C/E = characteristic plastic/elastic, D=plast.Design, F=elast. Design)

	N[kN]	Vy[kN]	Vz[kN]	Mt[kNm]	My[kNm]	Mz[kNm]	y[mm]	z[mm]	BUCK
C	88574.8	62852.74	66959.48	107298.0	98389.05	103886.2	26.0	-73.9	c c
C	-84552.0				174104.6	0.00	0.0	1206.	COMB
C	-44919.3				0.00	103846.0	0.0	0.0	COMB
C	-165453.	62852.74	66959.48	107298.0	-107828.	-103263.	-26.0	1357.	
C	-5286.5				-108229.	0.00	0.0	1206.	COMB
C	-44919.3				0.00	-103846.	0.0	0.0	COMB
E	94326.7	8552.59	17635.59	5208.12	72716.09	25586.62	0.0	1206.	
E	-94326.7	8552.59	17635.59	5208.12	-72716.1	-25586.6	0.0	1206.	
D	77021.6	47307.76	50239.63	71744.66	84270.92	77969.52	20.0	-24.3	
D	-60165.7				133346.4	0.00	0.0	1206.	COMB
D	-29946.2				0.00	77948.91	0.0	0.0	COMB
D	-128274.	47307.76	50239.63	71744.66	-89428.2	-77649.8	-20.0	1197.	
D	273.3				-89429.4	0.00	0.0	1206.	COMB
D	-29946.2				0.00	-77948.9	0.0	0.0	COMB
F	82023.2	7437.04	15335.29	3472.08	63231.38	22249.24	0.0	1206.	
F	-82023.2	7437.04	15335.29	3472.08	-63231.4	-22249.2	0.0	1206.	

Additional Design Data

M	periphery-O/-I [m2/m]	[m2/m]	deff [mm]	t-min [mm]	t-max [mm]	SMP [o/o]	thet-p [tm2/m]	thet-y [tm2/m]	thet-z [tm2/m]	thet-yz [tm2/m]
	53.644		10.5	3.1	681.5	0.0	32.782	10.128	22.653	
1	8.111		49.2	45.0	52.0	0.0	1.371	1.340	0.031	
25	1.363		1174.0			0.0	0.077	0.077		
**	0.004		32.0			0.0	0.000		0.000	
31	16.530		265.5	50.0	300.0	0.0	22.626	0.004	22.622	
**	27.636		3.1	3.1	3.1	0.0	0.000	0.000	0.000	

SOFiSTiK AG - www.sofistik.de

Composite bridge 38+50+38, b=14.25m, 2x2HL1100R HISTAR460 , slab 0.30m C30/37

Cross section No. 363.1 = CS 1 - steel alone

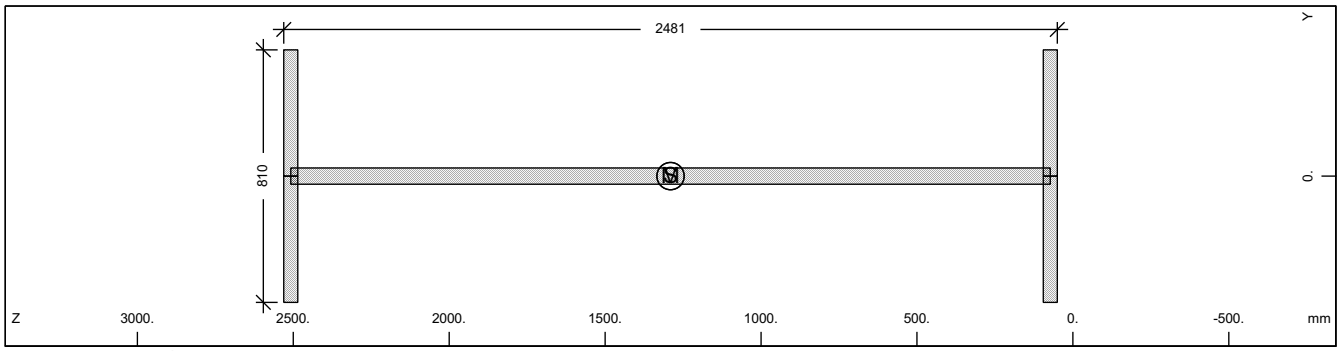

Cross section No. 363

Static properties of cross section

Mat NoR	A[cm2] It[cm4]	Ay/Az/Ayz [cm2]	Iy/Iz/Iyz [cm4]	ys/zs [mm]	modules [N/mm2]	gam [kN/m]
1	1995.48	607.50	17071144.	0.0	210000	15.66
	6270.0	1203.21	398580.9	1290.3	80769	

Additional static properties of cross section

Alfa-T [1/°K]	ymin ymax [mm]	zmin zmax [mm]	hymin hzmin [mm]	AK AB [cm2]	MB	Tau-T Tau-B [1/m3]	Tau-Vy Tau-Vz [1/m2]
1.2E-05	-405.0	-1240.3		1.208E+03		3.183E+02	2.058E+01
	405.0	1240.3				1.255E+02	9.344E+00

Section values for warping

Wmin[cm2]	Wmax[cm2]	CM[cm6]	CMS[cm4]	ASwyy[cm6]	ASwzz[cm6]	ry[mm]	rz[mm]
-4931.95	4931.955910766335.		9008939.6	-0.86	-36.84	0.0	0.0

Design values of cross section

Mat NoR	A[cm2] It[cm4]	Ay/Az/Ayz [cm2]	Iy/Iz/Iyz [cm4]	ys/zs [mm]	modules [N/mm2]	gam [kN/m]
1	1995.48	607.50	17071144.	0.0	182609	15.66
	6270.0	1203.21	398580.9	1290.3	70234	

Design forces and moments
(C/E = characteristic plastic/elastic, D=plast.Design, F=elast. Design)

	N[kN]	Vy[kN]	Vz[kN]	Mt[kNm]	My[kNm]	Mz[kNm]	y[mm]	z[mm]	BUCK
C	66848.5	14099.76	24495.21	954.12	55572.71	5496.91	0.0	1290.	c c
C	0.0				0.00	0.00	0.0	0.0	COMB
E	66848.5	9399.84	20699.67	607.61	46109.74	3296.90	0.0	1290.	
D	58129.1	12260.66	21300.19	829.67	48324.09	4779.92	0.0	1290.	
D	0.0				0.00	0.00	0.0	0.0	COMB
F	58129.1	8173.78	17999.71	528.36	40095.43	2866.87	0.0	1290.	

Additional Design Data

M	periphery-O/-I [m2/m] [m2/m]	deff [mm]	t-min [mm]	t-max [mm]	SMP [o/o]	thet-p [tm2/m]	thet-y [tm2/m]	thet-z [tm2/m]	thet-yz [tm2/m]
	8.111	49.2	45.0	52.0	0.0	1.371	1.340	0.031	

SOFiSTiK AG - www.sofistik.de

Composite bridge 38+50+38, b=14.25m, 2x2HL1100R HISTAR460 , slab 0.30m C30/37

Cross section No. 363.2 = CS 10 - prefab. slab C1

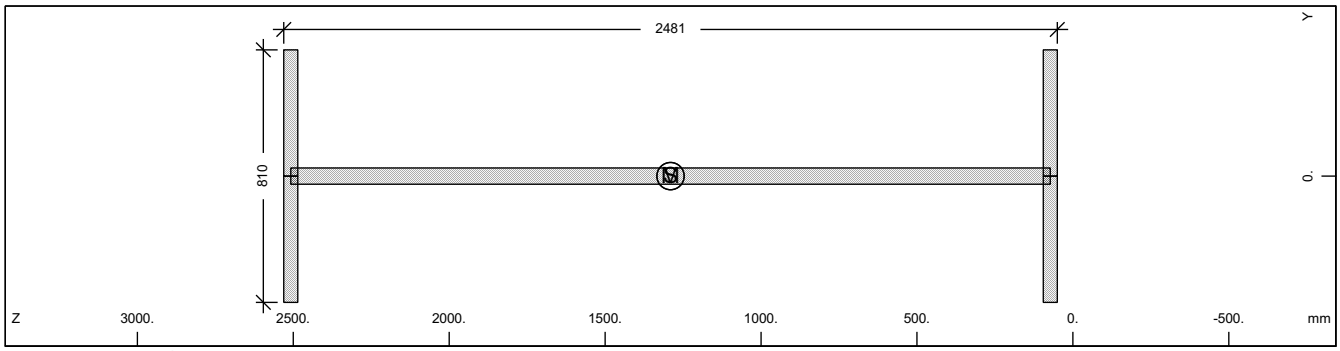

Cross section No. 363

Static properties of cross section

Mat / NoR	A[cm2] / It[cm4]	Ay/Az/Ayz [cm2]	Iy/Iz/Iyz [cm4]	ys/zs [mm]	modules [N/mm2]	gam [kN/m]
1	1995.48	607.50	17071144.	0.0	210000	15.66
	6270.0	1203.21	398580.9	1290.3	80769	

Additional static properties of cross section

Alfa-T [1/°K]	ymin / ymax [mm]	zmin / zmax [mm]	hymin / hzmin [mm]	AK / AB [cm2]	MB	Tau-T / Tau-B [1/m3]	Tau-Vy / Tau-Vz [1/m2]
1.2E-05	-405.0	-1240.3		1.208E+03		3.183E+02	2.058E+01
	405.0	1240.3				1.255E+02	9.344E+00

Section values for warping

Wmin[cm2]	Wmax[cm2]	CM[cm6]	CMS[cm4]	ASwyy[cm6]	ASwzz[cm6]	ry[mm]	rz[mm]
-4931.95	4931.955910766335.		9008939.6	-0.86	-36.84	0.0	0.0

Design values of cross section

Mat / NoR	A[cm2] / It[cm4]	Ay/Az/Ayz [cm2]	Iy/Iz/Iyz [cm4]	ys/zs [mm]	modules [N/mm2]	gam [kN/m]
1	1995.48	607.50	17071144.	0.0	182609	15.66
	6270.0	1203.21	398580.9	1290.3	70234	

Design forces and moments
(C/E = characteristic plastic/elastic, D=plast.Design, F=elast. Design)

	N[kN]	Vy[kN]	Vz[kN]	Mt[kNm]	My[kNm]	Mz[kNm]	y[mm]	z[mm]	BUCK
C	66848.5	14099.76	24495.21	954.12	55572.71	5496.91	0.0	1290.	c c
C	0.0				0.00	0.00	0.0	0.0	COMB
E	66848.5	9399.84	20699.67	607.61	46109.74	3296.90	0.0	1290.	
D	58129.1	12260.66	21300.19	829.67	48324.09	4779.92	0.0	1290.	
D	0.0				0.00	0.00	0.0	0.0	COMB
F	58129.1	8173.78	17999.71	528.36	40095.43	2866.87	0.0	1290.	

Additional Design Data

M	periphery-O/-I [m2/m]	[m2/m]	deff [mm]	t-min [mm]	t-max [mm]	SMP [o/o]	thet-p [tm2/m]	thet-y [tm2/m]	thet-z [tm2/m]	thet-yz [tm2/m]
	8.111		49.2	45.0	52.0	0.0	1.371	1.340	0.031	

SOFiSTiK AG - www.sofistik.de

Composite bridge 38+50+38, b=14.25m, 2x2HL1100R HISTAR460 , slab 0.30m C30/37

Cross section No. 363.3 = CS 20 - in-situ conc:C2

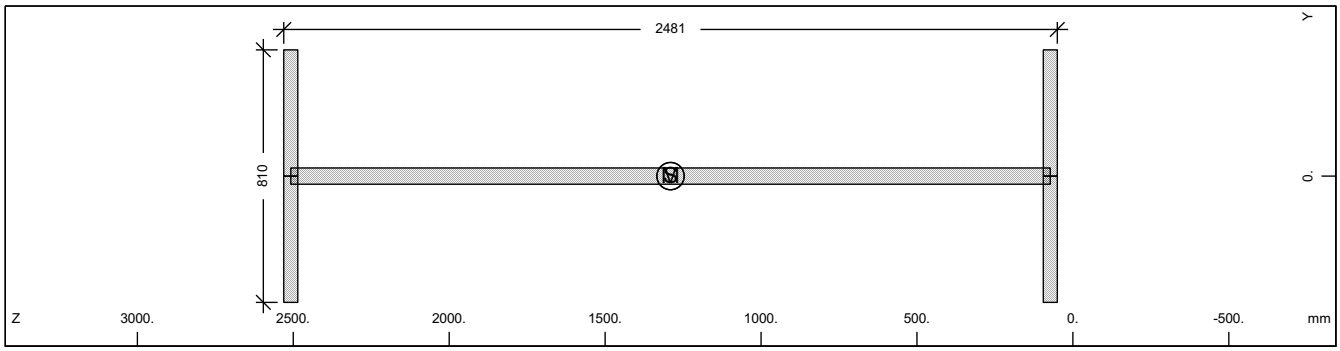

Cross section No. 363

Static properties of cross section

Mat NoR	A[cm2] It[cm4]	Ay/Az/Ayz [cm2]	Iy/Iz/Iyz [cm4]	ys/zs [mm]	modules [N/mm2]	gam [kN/m]
1	1995.48	607.50	17071144.	0.0	210000	15.66
	6270.0	1203.21	398580.9	1290.3	80769	

Additional static properties of cross section

Alfa-T [1/°K]	ymin ymax [mm]	zmin zmax [mm]	hymin hzmin [mm]	AK AB [cm2]	MB	Tau-T Tau-B [1/m3]	Tau-Vy Tau-Vz [1/m2]
1.2E-05	-405.0	-1240.3		1.208E+03		3.183E+02	2.058E+01
	405.0	1240.3				1.255E+02	9.344E+00

Section values for warping

Wmin[cm2]	Wmax[cm2]	CM[cm6]	CMS[cm4]	ASwyy[cm6]	ASwzz[cm6]	ry[mm]	rz[mm]
-4931.95	4931.955910766335.		9008939.6	-0.86	-36.84	0.0	0.0

Design values of cross section

Mat NoR	A[cm2] It[cm4]	Ay/Az/Ayz [cm2]	Iy/Iz/Iyz [cm4]	ys/zs [mm]	modules [N/mm2]	gam [kN/m]
1	1995.48	607.50	17071144.	0.0	182609	15.66
	6270.0	1203.21	398580.9	1290.3	70234	

Design forces and moments
(C/E = characteristic plastic/elastic, D=plast.Design, F=elast. Design)

	N[kN]	Vy[kN]	Vz[kN]	Mt[kNm]	My[kNm]	Mz[kNm]	y[mm]	z[mm]	BUCK
C	66848.5	14099.76	24495.21	954.12	55572.71	5496.91	0.0	1290.	c c
C	0.0				0.00	0.00	0.0	0.0	COMB
E	66848.5	9399.84	20699.67	607.61	46109.74	3296.90	0.0	1290.	
D	58129.1	12260.66	21300.19	829.67	48324.09	4779.92	0.0	1290.	
D	0.0				0.00	0.00	0.0	0.0	COMB
F	58129.1	8173.78	17999.71	528.36	40095.43	2866.87	0.0	1290.	

Additional Design Data

M	periphery-O/-I [m2/m] [m2/m]	deff [mm]	t-min [mm]	t-max [mm]	SMP [o/o]	thet-p [tm2/m]	thet-y [tm2/m]	thet-z [tm2/m]	thet-yz [tm2/m]
	8.111	49.2	45.0	52.0	0.0	1.371	1.340	0.031	

SOFiSTiK AG - www.sofistik.de

Composite bridge 38+50+38, b=14.25m, 2x2HL1100R HISTAR460 , slab 0.30m C30/37

Cross section No. 363.4 = CS 21 - reinf active:C2

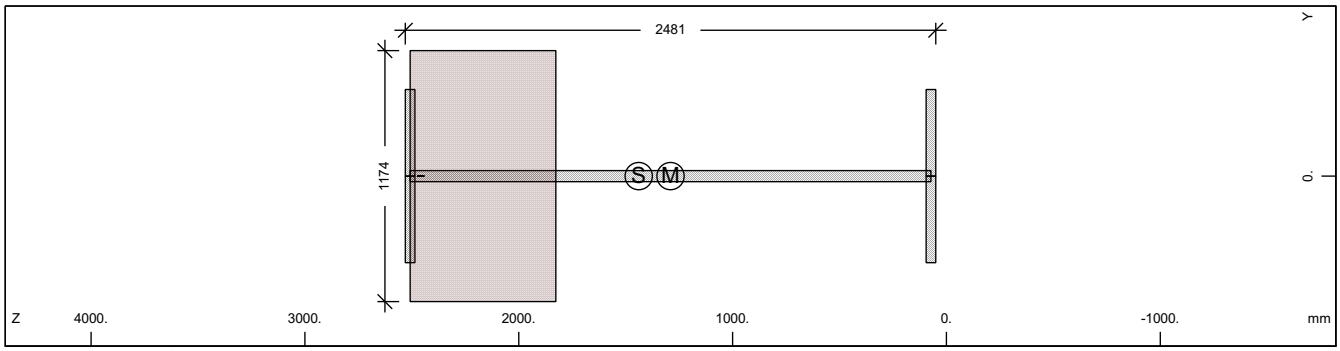

Cross section No. 363

Static properties of cross section

Mat NoR	A[cm2] It[cm4]	Ay/Az/Ayz [cm2]	Iy/Iz/Iyz [cm4]	ys/zs [mm]	modules [N/mm2]	gam [kN/m]
1	2402.50	607.50	19831725.	0.0	210000	35.67
	6270.0	1111.67	398580.9	1438.9	80769	

Additional static properties of cross section

Alfa-T [1/°K]	ymin ymax [mm]	zmin zmax [mm]	hymin hzmin [mm]	AK AB [cm2]	MB	Tau-T Tau-B [1/m3]	Tau-Vy Tau-Vz [1/m2]
1.2E-05	-587.0	-1388.9		5.377E+03		3.168E+00	2.058E+01
	587.0	1091.6		8.001E+03		1.255E+02	9.537E+00

Section values for warping

Wmin[cm2]	Wmax[cm2]	CM[cm6]	CMS[cm4]	ASwyy[cm6]	ASwzz[cm6]	ry[mm]	rz[mm]
-4931.95	4931.955910766335.		9008939.6	-1.84	-91.62	0.0	4.0

Partial cross sections

Mat NoR	A[cm2] It[cm4]	Ay/Az/Ayz [cm2]	Iy/Iz/Iyz [cm4]	ys/zs [mm]	modules [N/mm2]	gam [kN/m]
1	1995.48	607.50	17071144.	0.0	210000	15.66
	16335.9	1104.04	398580.9	1290.3	80769	
25	8001.18		3097020.5	0.0	10667	20.00
	36759433.	138.64	0.0	2167.3	4444	
210	0.64	0.00	0.0	0.0	200000	0.00
	2.2	0.00	0.0	2458.0	76923	

Design values of cross section

Mat NoR	A[cm2] It[cm4]	Ay/Az/Ayz [cm2]	Iy/Iz/Iyz [cm4]	ys/zs [mm]	modules [N/mm2]	gam [kN/m]
1	2307.67	607.50	19271289.	0.0	182609	35.67
	6270.0	1109.89	398580.9	1409.0	70234	

Design forces and moments
(C/E = characteristic plastic/elastic, D=plast.Design, F=elast. Design)

	N[kN]	Vy[kN]	Vz[kN]	Mt[kNm]	My[kNm]	Mz[kNm]	y[mm]	z[mm]	BUCK
C	66880.6	14118.33	38159.04	8711.35	55610.24	9145.70	7.0	1291.	c c
C	-5146.9				55990.41	0.00	0.0	1439.	COMB
C	-12001.8				0.00	9019.68	0.0	0.0	COMB
C	-90884.1	14118.33	38159.04	8711.35	-60975.9	-8977.67	-7.0	1815.	
C	-18856.6				-73473.3	0.00	0.0	1439.	COMB
C	-12001.8				0.00	-9019.68	0.0	0.0	COMB
E	80483.7	9399.84	20280.18	5208.09	47833.13	3296.90	0.0	1439.	
E	-80483.7	9399.84	20280.18	5208.09	-47833.1	-3296.90	0.0	1439.	
D	58157.1	12276.81	30503.12	6002.71	48356.73	7193.08	5.4	1291.	
D	-4475.5				48687.32	0.00	0.0	1439.	COMB
D	-8001.2				0.00	7128.49	0.0	0.0	COMB
D	-74159.4	12276.81	30503.12	6002.71	-51663.4	-7106.96	-5.4	1745.	
D	-11526.8				-60342.6	0.00	0.0	1439.	COMB
D	-8001.2				0.00	-7128.49	0.0	0.0	COMB

SOFiSTiK AG - www.sofistik.de

Composite bridge 38+50+38, b=14.25m, 2x2HL1100R HISTAR460 , slab 0.30m C30/37

Design forces and moments
(C/E = characteristic plastic/elastic, D=plast.Design, F=elast. Design)

	N[kN]	Vy[kN]	Vz[kN]	Mt[kNm]	My[kNm]	Mz[kNm]	y[mm]	z[mm]	BUCK
F	69985.8	8173.78	17634.94	3472.06	41594.03	2866.87	0.0	1439.	
F	-69985.8	8173.78	17634.94	3472.06	-41594.0	-2866.87	0.0	1439.	

Additional Design Data

M	periphery-O/-I [m2/m]	[m2/m]	deff [mm]	t-min [mm]	t-max [mm]	SMP [o/o]	thet-p [tm2/m]	thet-y [tm2/m]	thet-z [tm2/m]	thet-yz [tm2/m]
	9.478		50.7	32.0	681.5	0.0	2.124	2.093	0.031	
1	8.111		49.2	45.0	52.0	0.0	1.371	1.340	0.031	
25	1.363		1174.0			0.0	0.077	0.077		
**	0.004		32.0			0.0	0.000		0.000	

Cross section No. 363.5 = CS 30 - in-situ conc:C3

Cross section No. 364 - VFT (353)

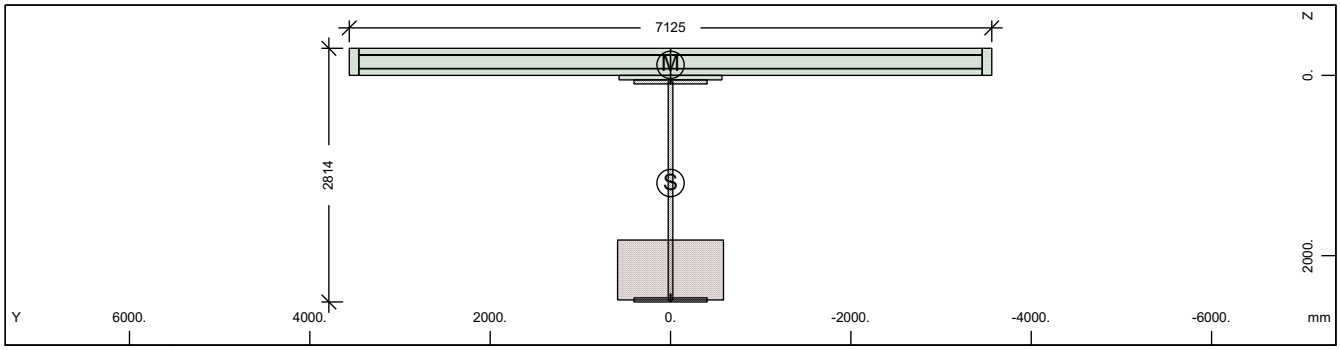

Cross section No. 364 - VFT (353)

Static properties of cross section

Mat NoR	A[cm2] It[cm4]	Ay/Az/Ayz [cm2]	Iy/Iz/Iyz [cm4]	ys/zs [mm]	y/z-sc [mm]	modules [N/mm2]	gam [kN/m]
1	2797.19	361.29	28284586.	0.0	0.0	210000	89.97
	6270.0	843.78	16860543.	1194.8	-116.2	80769	

Additional static properties of cross section

Alfa-T [1/°K]	ymin ymax [mm]	zmin zmax [mm]	hymin hzmin [mm]	AK AB [cm2]	MB	Tau-T Tau-B [1/m3]	Tau-Vy Tau-Vz [1/m2]
1.2E-05	-3562.5	-1494.8		5.246E+03		3.248E+00	3.374E+01
	3562.5	1319.0		2.975E+04		1.255E+02	1.652E+01

Section values for warping

Wmin[cm2]	Wmax[cm2]	CM[cm6]	CMS[cm4]	ASwyy[cm6]	ASwzz[cm6]	ry[mm]	rz[mm]
-10559.96	10559.96	1.473E+10	3490730.0	231.58	388.48	0.0	1778.2

Partial cross sections

Mat NoR	A[cm2] It[cm4]	Ay/Az/Ayz [cm2]	Iy/Iz/Iyz [cm4]	ys/zs [mm]	modules [N/mm2]	gam [kN/m]
1	1986.75	0.12	16794109.	0.0	210000	15.60
	16257.3	571.60	398580.9	1281.9	80769	
25	7804.12		2873790.3	0.0	10667	19.51
	35854125.	68.02	0.0	2158.9	4444	
210	0.64	0.00	0.0	0.0	200000	0.00
	2.2	0.00	0.0	2441.2	76923	
31	21945.00	17960.40	170028.4	0.0	0	54.86
	6417251.4	12406.66	904880243.	-145.5	0	
300	434.10	379.23	24418.2	0.0	200000	0.00
	14.3	281.33	17285057.	-150.0	76923	

SOFiSTiK AG - www.sofistik.de

Composite bridge 38+50+38, b=14.25m, 2x2HL1100R HISTAR460 , slab 0.30m C30/37

Design values of cross section

Mat NoR	A[cm2] It[cm4]	Ay/Az/Ayz [cm2]	Iy/Iz/Iyz [cm4]	ys/zs [mm]	modules [N/mm2]	gam [kN/m]
1	2704.70	361.29	27361414.	0.0	182609	89.97
	6270.0	842.40	16860543.	1161.8	70234	

Design forces and moments
(C/E = characteristic plastic/elastic, D=plast.Design, F=elast. Design)

	N[kN]	Vy[kN]	Vz[kN]	Mt[kNm]	My[kNm]	Mz[kNm]	y[mm]	z[mm]	BUCK
C	88293.3	62858.98	66465.54	107102.8	97431.91	103821.6	26.0	-73.9	c c
C	-84473.4				172607.7	0.00	0.0	1195.	COMB
C	-44623.7				0.00	103792.8	0.0	0.0	COMB
C	-164786.	62858.98	66465.53	107102.8	-106618.	-103214.	-26.0	1332.	
C	-4773.9				-106945.	0.00	0.0	1195.	COMB
C	-44623.7				0.00	-103793.	0.0	0.0	COMB
E	93705.9	8556.55	17471.39	5080.69	71838.91	25611.21	0.0	1195.	
E	-93705.9	8556.55	17471.39	5080.69	-71838.9	-25611.2	0.0	1195.	
D	76776.7	47313.18	49876.09	71613.62	83451.47	77934.95	20.0	-26.1	
D	-60097.3				132191.1	0.00	0.0	1195.	COMB
D	-29749.1				0.00	77920.23	0.0	0.0	COMB
D	-127772.	47313.18	49876.08	71613.62	-88410.3	-77623.1	-20.0	1175.	
D	599.1				-88416.2	0.00	0.0	1195.	COMB
D	-29749.1				0.00	-77920.2	0.0	0.0	COMB
F	81483.4	7440.48	15192.51	3387.12	62468.62	22270.62	0.0	1195.	
F	-81483.4	7440.48	15192.51	3387.12	-62468.6	-22270.6	0.0	1195.	

Additional Design Data

M	periphery-O/-I [m2/m]	[m2/m]	deff [mm]	t-min [mm]	t-max [mm]	SMP [o/o]	thet-p [tm2/m]	thet-y [tm2/m]	thet-z [tm2/m]	thet-yz [tm2/m]
	53.591		10.4	3.1	664.7	0.0	32.563	9.909	22.653	
1	8.077		49.2	45.0	52.0	0.0	1.350	1.318	0.031	
25	1.329		1174.0			0.0	0.072	0.072		
**	0.004		32.0			0.0	0.000		0.000	
31	16.530		265.5	50.0	300.0	0.0	22.626	0.004	22.622	
**	27.650		3.1	3.1	3.1	0.0	0.000	0.000	0.000	

Cross section No. 364.1 = CS 1 - steel alone

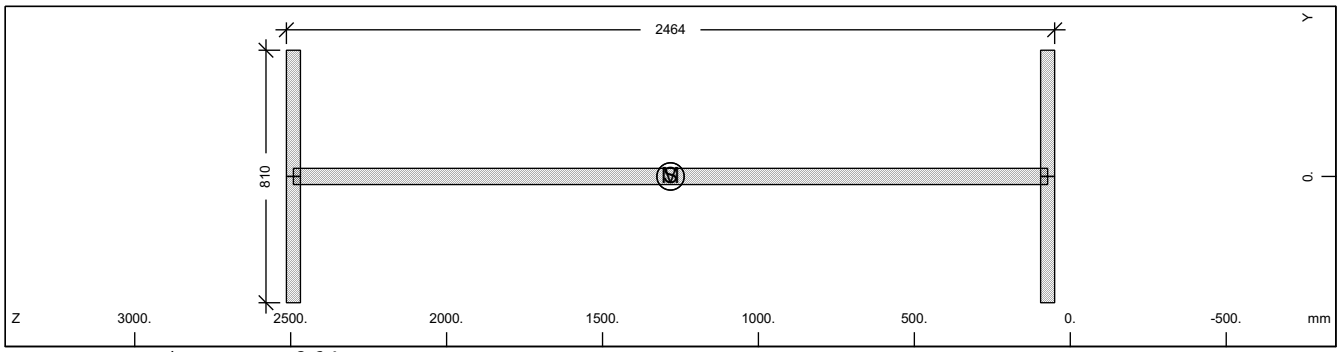

Cross section No. 364

Static properties of cross section

Mat NoR	A[cm2] It[cm4]	Ay/Az/Ayz [cm2]	Iy/Iz/Iyz [cm4]	ys/zs [mm]	modules [N/mm2]	gam [kN/m]
1	1986.75	607.50	16794109.	0.0	210000	15.60
	6270.0	1194.83	398580.9	1281.9	80769	

Additional static properties of cross section

Alfa-T [1/°K]	ymin ymax [mm]	zmin zmax [mm]	hymin hzmin [mm]	AK AB [cm2]	MB	Tau-T Tau-B [1/m3]	Tau-Vy Tau-Vz [1/m2]
1.2E-05	-405.0	-1231.9		1.202E+03		3.199E+02	2.058E+01
	405.0	1231.9				1.255E+02	9.402E+00

SOFiSTiK AG - www.sofistik.de

Composite bridge 38+50+38, b=14.25m, 2x2HL1100R HISTAR460 , slab 0.30m C30/37

Section values for warping

Wmin[cm2]	Wmax[cm2]	CM[cm6]	CMS[cm4]	ASwyy[cm6]	ASwzz[cm6]	ry[mm]	rz[mm]
-4897.96	4897.965829578289.	8885196.7		-0.50	-21.21	0.0	0.0

Design values of cross section

Mat NoR	A[cm2] It[cm4]	Ay/Az/Ayz [cm2]	Iy/Iz/Iyz [cm4]	ys/zs [mm]	modules [N/mm2]	gam [kN/m]
1	1986.75	607.50	16794109.	0.0	182609	15.60
	6270.0	1194.83	398580.9	1281.9	70234	

Design forces and moments
(C/E = characteristic plastic/elastic, D=plast.Design, F=elast. Design)

	N[kN]	Vy[kN]	Vz[kN]	Mt[kNm]	My[kNm]	Mz[kNm]	y[mm]	z[mm]	BUCK
C	66556.1	14099.76	24326.40	949.73	55012.92	5493.10	0.0	1282.	c c
C	0.0				0.00	0.00	0.0	0.0	COMB
E	66556.1	9399.84	20570.95	604.68	45670.48	3296.90	0.0	1282.	
D	57874.8	12260.66	21153.39	825.85	47837.32	4776.61	0.0	1282.	
D	0.0				0.00	0.00	0.0	0.0	COMB
F	57874.8	8173.78	17887.78	525.81	39713.46	2866.87	0.0	1282.	

Additional Design Data

M	periphery-O/-I [m2/m]	[m2/m]	deff [mm]	t-min [mm]	t-max [mm]	SMP [o/o]	thet-p [tm2/m]	thet-y [tm2/m]	thet-z [tm2/m]	thet-yz [tm2/m]
	8.077		49.2	45.0	52.0	0.0	1.350	1.318	0.031	

Cross section No. 364.2 = CS 10 - prefab. slab C1

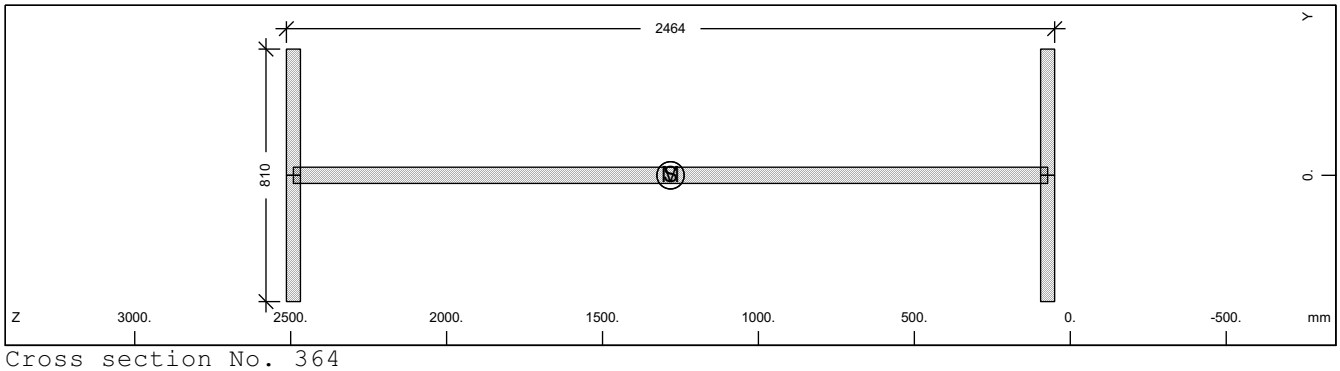

Cross section No. 364

Static properties of cross section

Mat NoR	A[cm2] It[cm4]	Ay/Az/Ayz [cm2]	Iy/Iz/Iyz [cm4]	ys/zs [mm]	modules [N/mm2]	gam [kN/m]
1	1986.75	607.50	16794109.	0.0	210000	15.60
	6270.0	1194.83	398580.9	1281.9	80769	

Additional static properties of cross section

Alfa-T [1/°K]	ymin ymax [mm]	zmin zmax [mm]	hymin hzmin [mm]	AK AB [cm2]	MB	Tau-T Tau-B [1/m3]	Tau-Vy Tau-Vz [1/m2]
1.2E-05	-405.0	-1231.9		1.202E+03		3.199E+02	2.058E+01
	405.0	1231.9				1.255E+02	9.402E+00

Section values for warping

Wmin[cm2]	Wmax[cm2]	CM[cm6]	CMS[cm4]	ASwyy[cm6]	ASwzz[cm6]	ry[mm]	rz[mm]
-4897.96	4897.965829578289.	8885196.7		-0.50	-21.21	0.0	0.0

Design values of cross section

Mat NoR	A[cm2] It[cm4]	Ay/Az/Ayz [cm2]	Iy/Iz/Iyz [cm4]	ys/zs [mm]	modules [N/mm2]	gam [kN/m]
1	1986.75	607.50	16794109.	0.0	182609	15.60
	6270.0	1194.83	398580.9	1281.9	70234	

SOFiSTiK AG - www.sofistik.de

Composite bridge 38+50+38, b=14.25m, 2x2HL1100R HISTAR460 , slab 0.30m C30/37

Design forces and moments
(C/E = characteristic plastic/elastic, D=plast.Design, F=elast. Design)

	N[kN]	Vy[kN]	Vz[kN]	Mt[kNm]	My[kNm]	Mz[kNm]	y[mm]	z[mm]	BUCK
C	66556.1	14099.76	24326.40	949.73	55012.92	5493.10	0.0	1282.	c c
C	0.0				0.00	0.00	0.0	0.0	COMB
E	66556.1	9399.84	20570.95	604.68	45670.48	3296.90	0.0	1282.	
D	57874.8	12260.66	21153.39	825.85	47837.32	4776.61	0.0	1282.	
D	0.0				0.00	0.00	0.0	0.0	COMB
F	57874.8	8173.78	17887.78	525.81	39713.46	2866.87	0.0	1282.	

Additional Design Data

M	periphery-O/-I [m2/m]	[m2/m]	deff [mm]	t-min [mm]	t-max [mm]	SMP [o/o]	thet-p [tm2/m]	thet-y [tm2/m]	thet-z [tm2/m]	thet-yz [tm2/m]
	8.077		49.2	45.0	52.0	0.0	1.350	1.318	0.031	

Cross section No. 364.3 = CS 20 - in-situ conc:C2

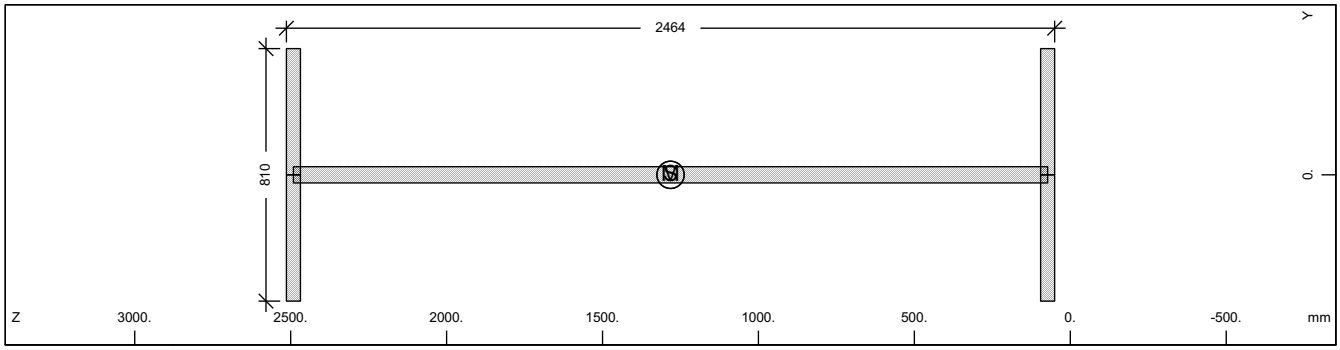

Cross section No. 364

Static properties of cross section

Mat NoR	A[cm2] It[cm4]	Ay/Az/Ayz [cm2]	Iy/Iz/Iyz [cm4]	ys/zs [mm]	modules [N/mm2]	gam [kN/m]
1	1986.75	607.50	16794109.	0.0	210000	15.60
	6270.0	1194.83	398580.9	1281.9	80769	

Additional static properties of cross section

Alfa-T [1/°K]	ymin ymax [mm]	zmin zmax [mm]	hymin hzmin [mm]	AK AB [cm2]	MB	Tau-T Tau-B [1/m3]	Tau-Vy Tau-Vz [1/m2]
1.2E-05	-405.0	-1231.9		1.202E+03		3.199E+02	2.058E+01
	405.0	1231.9				1.255E+02	9.402E+00

Section values for warping

Wmin[cm2]	Wmax[cm2]	CM[cm6]	CMS[cm4]	ASwyy[cm6]	ASwzz[cm6]	ry[mm]	rz[mm]
-4897.96	4897.965829578289.	8885196.7		-0.50	-21.21	0.0	0.0

Design values of cross section

Mat NoR	A[cm2] It[cm4]	Ay/Az/Ayz [cm2]	Iy/Iz/Iyz [cm4]	ys/zs [mm]	modules [N/mm2]	gam [kN/m]
1	1986.75	607.50	16794109.	0.0	182609	15.60
	6270.0	1194.83	398580.9	1281.9	70234	

Design forces and moments
(C/E = characteristic plastic/elastic, D=plast.Design, F=elast. Design)

	N[kN]	Vy[kN]	Vz[kN]	Mt[kNm]	My[kNm]	Mz[kNm]	y[mm]	z[mm]	BUCK
C	66556.1	14099.76	24326.40	949.73	55012.92	5493.10	0.0	1282.	c c
C	0.0				0.00	0.00	0.0	0.0	COMB
E	66556.1	9399.84	20570.95	604.68	45670.48	3296.90	0.0	1282.	
D	57874.8	12260.66	21153.39	825.85	47837.32	4776.61	0.0	1282.	
D	0.0				0.00	0.00	0.0	0.0	COMB
F	57874.8	8173.78	17887.78	525.81	39713.46	2866.87	0.0	1282.	

SOFiSTiK AG - www.sofistik.de

Composite bridge 38+50+38, b=14.25m, 2x2HL1100R HISTAR460 , slab 0.30m C30/37

Additional Design Data

M	periphery-O/-I [m2/m]	[m2/m]	deff [mm]	t-min [mm]	t-max [mm]	SMP [o/o]	thet-p [tm2/m]	thet-y [tm2/m]	thet-z [tm2/m]	thet-yz [tm2/m]
	8.077		49.2	45.0	52.0	0.0	1.350	1.318	0.031	

Cross section No. 364.4 = CS 21 - reinf active:C2

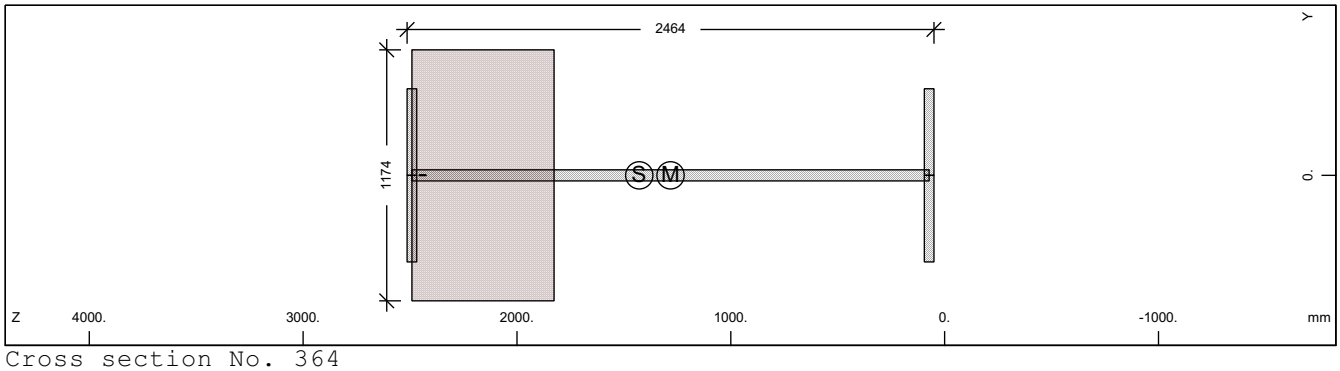

Cross section No. 364

Static properties of cross section

Mat NoR	A[cm2] It[cm4]	Ay/Az/Ayz [cm2]	Iy/Iz/Iyz [cm4]	ys/zs [mm]	modules [N/mm2]	gam [kN/m]
1	2383.76	607.50	19488070.	0.0	210000	35.11
	6270.0	1106.27	398580.9	1428.0	80769	

Additional static properties of cross section

Alfa-T [1/°K]	ymin ymax [mm]	zmin zmax [mm]	hymin hzmin [mm]	AK AB [cm2]	MB	Tau-T Tau-B [1/m3]	Tau-Vy Tau-Vz [1/m2]
1.2E-05	-587.0	-1378.0		5.246E+03		3.248E+00	2.058E+01
	587.0	1085.7		7.804E+03		1.255E+02	9.590E+00

Section values for warping

Wmin[cm2]	Wmax[cm2]	CM[cm6]	CMS[cm4]	ASwyy[cm6]	ASwzz[cm6]	ry[mm]	rz[mm]
-4897.96	4897.965829578289.		8885195.9	-1.06	-51.75	0.0	4.5

Partial cross sections

Mat NoR	A[cm2] It[cm4]	Ay/Az/Ayz [cm2]	Iy/Iz/Iyz [cm4]	ys/zs [mm]	modules [N/mm2]	gam [kN/m]
1	1986.75	607.50	16794109.	0.0	210000	15.60
	16257.3	1098.92	398580.9	1281.9	80769	
25	7804.12		2873790.3	0.0	10667	19.51
	35854125.	133.75	0.0	2158.9	4444	
210	0.64	0.00	0.0	0.0	200000	0.00
	2.2	0.00	0.0	2441.2	76923	

Design values of cross section

Mat NoR	A[cm2] It[cm4]	Ay/Az/Ayz [cm2]	Iy/Iz/Iyz [cm4]	ys/zs [mm]	modules [N/mm2]	gam [kN/m]
1	2291.27	607.50	18940002.	0.0	182609	35.11
	6270.0	1104.56	398580.9	1398.5	70234	

Design forces and moments
(C/E = characteristic plastic/elastic, D=plast.Design, F=elast. Design)

	N[kN]	Vy[kN]	Vz[kN]	Mt[kNm]	My[kNm]	Mz[kNm]	y[mm]	z[mm]	BUCK
C	66588.2	14118.33	37665.09	8516.10	55050.18	9049.84	6.9	1283.	c c
C	-5059.2				55417.52	0.00	0.0	1428.	COMB
C	-11706.2				0.00	8929.13	0.0	0.0	COMB
C	-90000.6	14118.33	37665.09	8516.10	-60582.6	-8888.89	-6.9	1815.	
C	-18353.2				-72528.8	0.00	0.0	1428.	COMB
C	-11706.2				0.00	-8929.13	0.0	0.0	COMB
E	79856.0	9399.84	20168.60	5080.65	47376.34	3296.90	0.0	1428.	
E	-79856.0	9399.84	20168.60	5080.65	-47376.3	-3296.90	0.0	1428.	
D	57902.8	12276.81	30139.57	5871.66	47869.72	7129.21	5.3	1283.	

SOFiSTiK AG - www.sofistik.de

Composite bridge 38+50+38, b=14.25m, 2x2HL1100R HISTAR460 , slab 0.30m C30/37

Design forces and moments
(C/E = characteristic plastic/elastic, D=plast.Design, F=elast. Design)

	N[kN]	Vy[kN]	Vz[kN]	Mt[kNm]	My[kNm]	Mz[kNm]	y[mm]	z[mm]	BUCK
D	-4399.3				48189.14	0.00	0.0	1428.	COMB
D	-7804.1				0.00	7067.35	0.0	0.0	COMB
D	-73511.0	12276.81	30139.57	5871.66	-51049.1	-7046.72	-5.3	1729.	
D	-11208.9				-59596.7	0.00	0.0	1428.	COMB
D	-7804.1				0.00	-7067.35	0.0	0.0	COMB
F	69440.0	8173.78	17537.91	3387.10	41196.82	2866.87	0.0	1428.	
F	-69440.0	8173.78	17537.91	3387.10	-41196.8	-2866.87	0.0	1428.	

Additional Design Data

M	periphery-O/-I [m2/m]	[m2/m]	deff [mm]	t-min [mm]	t-max [mm]	SMP [o/o]	thet-p [tm2/m]	thet-y [tm2/m]	thet-z [tm2/m]	thet-yz [tm2/m]
	9.411		50.7	32.0	664.7	0.0	2.088	2.057	0.031	
1	8.077		49.2	45.0	52.0	0.0	1.350	1.318	0.031	
25	1.329		1174.0			0.0	0.072	0.072		
**	0.004		32.0			0.0	0.000		0.000	

Cross section No. 364.5 = CS 30 - in-situ conc:C3

Cross section No. 365 - VFT (353)

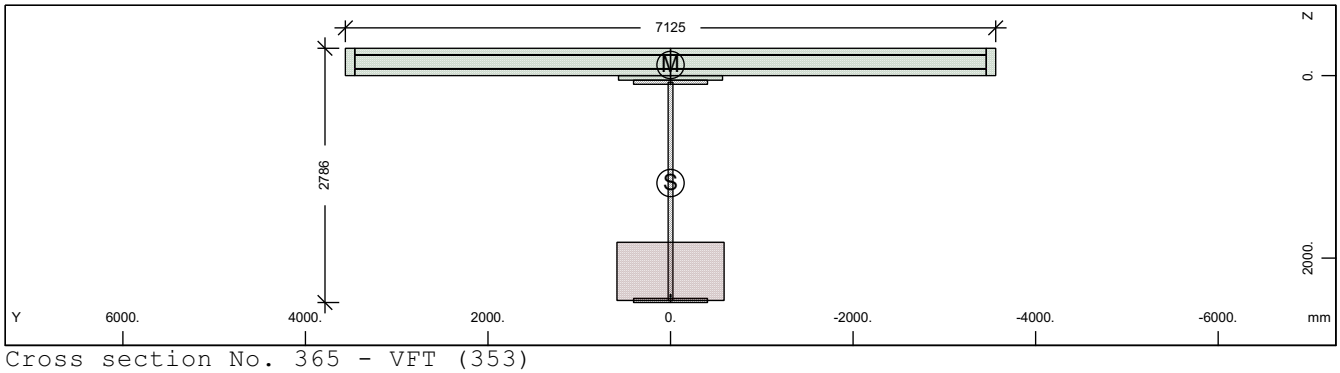

Cross section No. 365 - VFT (353)

Static properties of cross section

Mat NoR	A[cm2] It[cm4]	Ay/Az/Ayz [cm2]	Iy/Iz/Iyz [cm4]	ys/zs [mm]	y/z-sc [mm]	modules [N/mm2]	gam [kN/m]
1	2767.00	361.54	27523208.	0.0	0.0	210000	89.05
	6270.0	832.09	16900623.	1176.9	-116.6	80769	

Additional static properties of cross section

Alfa-T [1/°K]	ymin ymax [mm]	zmin zmax [mm]	hymin hzmin [mm]	AK AB [cm2]	MB	Tau-T Tau-B [1/m3]	Tau-Vy Tau-Vz [1/m2]
1.2E-05	-3562.5	-1476.9		5.031E+03		3.386E+00	3.371E+01
	3562.5	1309.5		2.943E+04		1.255E+02	1.678E+01

Section values for warping

Wmin[cm2]	Wmax[cm2]	CM[cm6]	CMS[cm4]	ASwyy[cm6]	ASwzz[cm6]	ry[mm]	rz[mm]
-10450.83	10450.83	1.445E+10	3369070.6	-220.45	-359.01	0.0	1740.8

Partial cross sections

Mat NoR	A[cm2] It[cm4]	Ay/Az/Ayz [cm2]	Iy/Iz/Iyz [cm4]	ys/zs [mm]	modules [N/mm2]	gam [kN/m]
1	1972.53	0.12	16348703.	0.0	210000	15.48
	16129.1	559.58	398580.9	1268.2	80769	
25	7483.05		2533488.5	0.0	10667	18.71
	34379041.	62.63	0.0	2145.2	4444	
210	0.64	0.00	0.0	0.0	200000	0.00
	2.2	0.00	0.0	2413.9	76923	
31	21945.00	17900.25	170028.4	0.0	0	54.86
	6417251.4	12404.70	904880243.	-145.5	0	

SOFiSTiK AG - www.sofistik.de

Composite bridge 38+50+38, b=14.25m, 2x2HL1100R HISTAR460 , slab 0.30m C30/37

300	434.45	379.49	24438.0	0.0	200000	0.00
	14.3	281.99	17327139.	-150.0	76923	

Design values of cross section

Mat	A[cm2]	Ay/Az/Ayz	Iy/Iz/Iyz	ys/zs	modules	gam
NoR	It[cm4]	[cm2]	[cm4]	[mm]	[N/mm2]	[kN/m]
1	2678.31	361.54	26634017.	0.0	182609	89.05
	6270.0	830.78	16900621.	1144.8	70234	

Design forces and moments
(C/E = characteristic plastic/elastic, D=plast.Design, F=elast. Design)

	N[kN]	Vy[kN]	Vz[kN]	Mt[kNm]	My[kNm]	Mz[kNm]	y[mm]	z[mm]	BUCK
C	87834.4	62869.14	65660.71	106784.7	95882.84	103716.1	26.0	-74.0	c c
C	-84342.9				170167.9	0.00	0.0	1177.	COMB
C	-44142.1				0.00	103706.1	0.0	0.0	COMB
C	-163701.	62869.14	65660.70	106784.7	-104630.	-103133.	-26.0	1290.	
C	-3941.2				-104852.	0.00	0.0	1177.	COMB
C	-44142.1				0.00	-103706.	0.0	0.0	COMB
E	92694.4	8563.00	17204.53	4873.04	70408.16	25651.29	0.0	1177.	
E	-92694.4	8563.00	17204.53	4873.04	-70408.2	-25651.3	0.0	1177.	
D	76377.8	47322.02	49283.73	71400.11	82124.37	77878.62	20.0	-29.1	
D	-59983.9				130309.0	0.00	0.0	1177.	COMB
D	-29428.1				0.00	77873.52	0.0	0.0	COMB
D	-126955.	47322.02	49283.72	71400.09	-86744.4	-77579.5	-20.0	1140.	
D	1127.7				-86765.4	0.00	0.0	1177.	COMB
D	-29428.1				0.00	-77873.5	0.0	0.0	COMB
F	80603.8	7446.08	14960.46	3248.70	61224.48	22305.47	0.0	1177.	
F	-80603.8	7446.08	14960.46	3248.70	-61224.5	-22305.5	0.0	1177.	

Additional Design Data

M	periphery-O/-I		deff	t-min	t-max	SMP	thet-p	thet-y	thet-z	thet-yz
	[m2/m]	[m2/m]	[mm]	[mm]	[mm]	[o/o]	[tm2/m]	[tm2/m]	[tm2/m]	[tm2/m]
	53.504		10.3	3.1	637.4	0.0	32.208	9.555	22.653	
1	8.023		49.2	45.0	52.0	0.0	1.315	1.283	0.031	
25	1.275		1174.0			0.0	0.063	0.063		
**	0.004		32.0			0.0	0.000		0.000	
31	16.530		265.5	50.0	300.0	0.0	22.626	0.004	22.622	
**	27.672		3.1	3.1	3.1	0.0	0.000	0.000	0.000	

Cross section No. 365.1 = CS 1 - steel alone

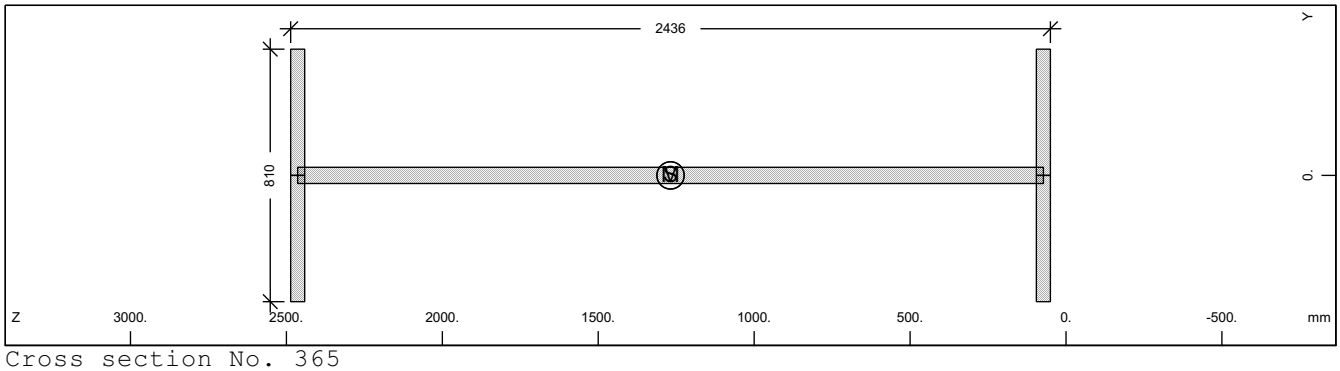

Cross section No. 365

Static properties of cross section

Mat	A[cm2]	Ay/Az/Ayz	Iy/Iz/Iyz	ys/zs	modules	gam
NoR	It[cm4]	[cm2]	[cm4]	[mm]	[N/mm2]	[kN/m]
1	1972.53	607.50	16348703.	0.0	210000	15.48
	6270.0	1181.17	398580.9	1268.2	80769	

SOFiSTiK AG - www.sofistik.de

Composite bridge 38+50+38, b=14.25m, 2x2HL1100R HISTAR460 , slab 0.30m C30/37

Additional static properties of cross section

Alfa-T	ymin ymax	zmin zmax	hymin hzmin	AK AB	MB	Tau-T Tau-B	Tau-Vy Tau-Vz
[1/°K]	[mm]	[mm]	[mm]	[cm2]		[1/m3]	[1/m2]
1.2E-05	-405.0	-1218.2		1.193E+03		3.224E+02	2.058E+01
	405.0	1218.2				1.255E+02	9.499E+00

Section values for warping

Wmin[cm2]	Wmax[cm2]	CM[cm6]	CMS[cm4]	ASwyy[cm6]	ASwzz[cm6]	ry[mm]	rz[mm]
-4842.58	4842.585698494636.		8685404.1	-5.57	-228.61	0.0	0.0

Design values of cross section

Mat NoR	A[cm2] It[cm4]	Ay/Az/Ayz [cm2]	Iy/Iz/Iyz [cm4]	ys/zs [mm]	modules [N/mm2]	gam [kN/m]
1	1972.53	607.50	16348703.	0.0	182609	15.48
	6270.0	1181.17	398580.9	1268.2	70234	

Design forces and moments
(C/E = characteristic plastic/elastic, D=plast.Design, F=elast. Design)

	N[kN]	Vy[kN]	Vz[kN]	Mt[kNm]	My[kNm]	Mz[kNm]	y[mm]	z[mm]	BUCK
C	66079.7	14099.76	24051.35	942.58	54106.07	5486.91	0.0	1268.	c c
C	0.0				0.00	0.00	0.0	0.0	COMB
E	66079.7	9399.84	20361.02	599.92	44958.29	3296.90	0.0	1268.	
D	57460.6	12260.66	20914.22	819.63	47048.76	4771.23	0.0	1268.	
D	0.0				0.00	0.00	0.0	0.0	COMB
F	57460.6	8173.78	17705.24	521.67	39094.16	2866.87	0.0	1268.	

Additional Design Data

M	periphery-O/-I [m2/m]	[m2/m]	deff [mm]	t-min [mm]	t-max [mm]	SMP [o/o]	thet-p [tm2/m]	thet-y [tm2/m]	thet-z [tm2/m]	thet-yz [tm2/m]
	8.023		49.2	45.0	52.0	0.0	1.315	1.283	0.031	

Cross section No. 365.2 = CS 10 - prefab. slab C1

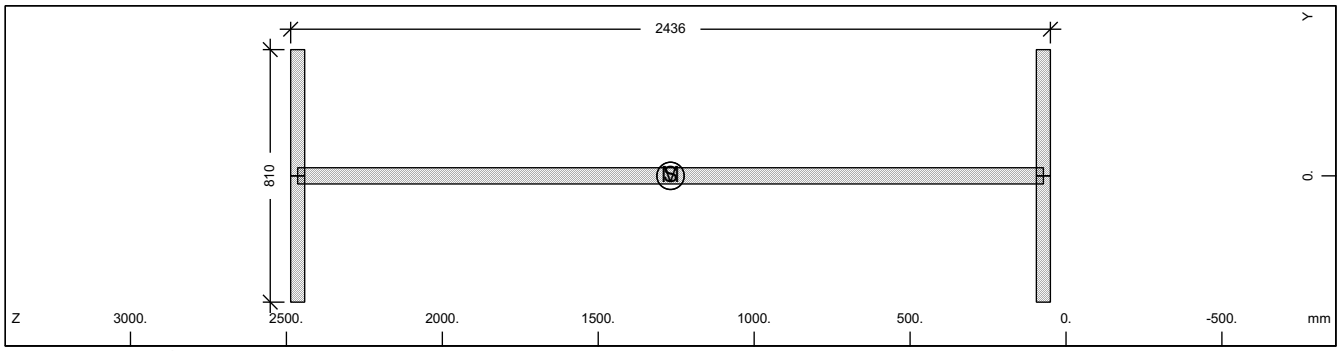

Cross section No. 365

Static properties of cross section

Mat NoR	A[cm2] It[cm4]	Ay/Az/Ayz [cm2]	Iy/Iz/Iyz [cm4]	ys/zs [mm]	modules [N/mm2]	gam [kN/m]
1	1972.53	607.50	16348703.	0.0	210000	15.48
	6270.0	1181.17	398580.9	1268.2	80769	

Additional static properties of cross section

Alfa-T	ymin ymax	zmin zmax	hymin hzmin	AK AB	MB	Tau-T Tau-B	Tau-Vy Tau-Vz
[1/°K]	[mm]	[mm]	[mm]	[cm2]		[1/m3]	[1/m2]
1.2E-05	-405.0	-1218.2		1.193E+03		3.224E+02	2.058E+01
	405.0	1218.2				1.255E+02	9.499E+00

Section values for warping

Wmin[cm2]	Wmax[cm2]	CM[cm6]	CMS[cm4]	ASwyy[cm6]	ASwzz[cm6]	ry[mm]	rz[mm]
-4842.58	4842.585698494636.		8685404.1	-5.57	-228.61	0.0	0.0

SOFiSTiK AG - www.sofistik.de

Composite bridge 38+50+38, b=14.25m, 2x2HL1100R HISTAR460 , slab 0.30m C30/37

Design values of cross section

Mat NoR	A[cm2] It[cm4]	Ay/Az/Ayz [cm2]	Iy/Iz/Iyz [cm4]	ys/zs [mm]	modules [N/mm2]	gam [kN/m]
1	1972.53	607.50	16348703.	0.0	182609	15.48
	6270.0	1181.17	398580.9	1268.2	70234	

Design forces and moments
(C/E = characteristic plastic/elastic, D=plast.Design, F=elast. Design)

	N[kN]	Vy[kN]	Vz[kN]	Mt[kNm]	My[kNm]	Mz[kNm]	y[mm]	z[mm]	BUCK
C	66079.7	14099.76	24051.35	942.58	54106.07	5486.91	0.0	1268.	c c
C	0.0				0.00	0.00	0.0	0.0	COMB
E	66079.7	9399.84	20361.02	599.92	44958.29	3296.90	0.0	1268.	
D	57460.6	12260.66	20914.22	819.63	47048.76	4771.23	0.0	1268.	
D	0.0				0.00	0.00	0.0	0.0	COMB
F	57460.6	8173.78	17705.24	521.67	39094.16	2866.87	0.0	1268.	

Additional Design Data

M	periphery-O/-I [m2/m] [m2/m]	deff [mm]	t-min [mm]	t-max [mm]	SMP [o/o]	thet-p [tm2/m]	thet-y [tm2/m]	thet-z [tm2/m]	thet-yz [tm2/m]
	8.023	49.2	45.0	52.0	0.0	1.315	1.283	0.031	

Cross section No. 365.3 = CS 20 - in-situ conc:C2

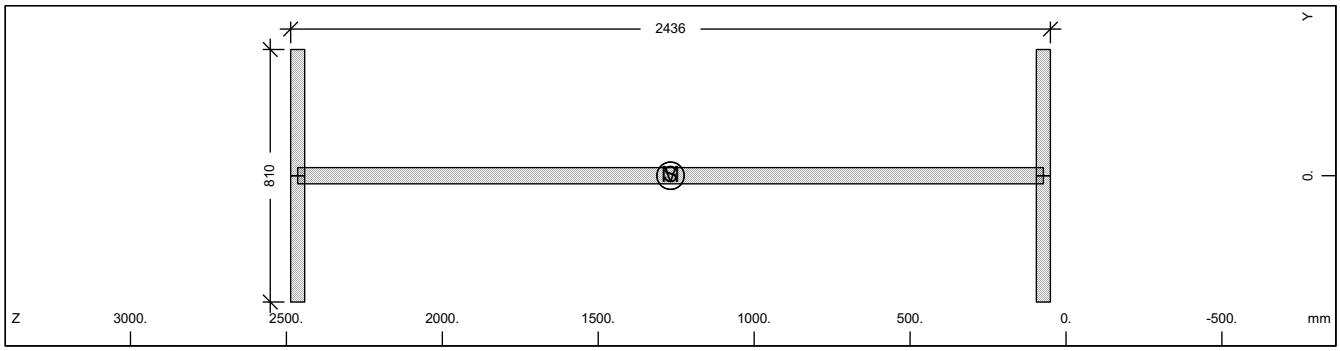

Cross section No. 365

Static properties of cross section

Mat NoR	A[cm2] It[cm4]	Ay/Az/Ayz [cm2]	Iy/Iz/Iyz [cm4]	ys/zs [mm]	modules [N/mm2]	gam [kN/m]
1	1972.53	607.50	16348703.	0.0	210000	15.48
	6270.0	1181.17	398580.9	1268.2	80769	

Additional static properties of cross section

Alfa-T [1/°K]	ymin ymax [mm]	zmin zmax [mm]	hymin hzmin [mm]	AK AB [cm2]	MB	Tau-T Tau-B [1/m3]	Tau-Vy Tau-Vz [1/m2]
1.2E-05	-405.0	-1218.2		1.193E+03		3.224E+02	2.058E+01
	405.0	1218.2				1.255E+02	9.499E+00

Section values for warping

Wmin[cm2]	Wmax[cm2]	CM[cm6]	CMS[cm4]	ASwyy[cm6]	ASwzz[cm6]	ry[mm]	rz[mm]
-4842.58	4842.585698494636.	8685404.1		-5.57	-228.61	0.0	0.0

Design values of cross section

Mat NoR	A[cm2] It[cm4]	Ay/Az/Ayz [cm2]	Iy/Iz/Iyz [cm4]	ys/zs [mm]	modules [N/mm2]	gam [kN/m]
1	1972.53	607.50	16348703.	0.0	182609	15.48
	6270.0	1181.17	398580.9	1268.2	70234	

Design forces and moments
(C/E = characteristic plastic/elastic, D=plast.Design, F=elast. Design)

	N[kN]	Vy[kN]	Vz[kN]	Mt[kNm]	My[kNm]	Mz[kNm]	y[mm]	z[mm]	BUCK
C	66079.7	14099.76	24051.35	942.58	54106.07	5486.91	0.0	1268.	c c
C	0.0				0.00	0.00	0.0	0.0	COMB
E	66079.7	9399.84	20361.02	599.92	44958.29	3296.90	0.0	1268.	

SOFiSTiK AG - www.sofistik.de

Composite bridge 38+50+38, b=14.25m, 2x2HL1100R HISTAR460 , slab 0.30m C30/37

Design forces and moments
(C/E = characteristic plastic/elastic, D=plast.Design, F=elast. Design)

	N[kN]	Vy[kN]	Vz[kN]	Mt[kNm]	My[kNm]	Mz[kNm]	y[mm]	z[mm]	BUCK
D	57460.6	12260.66	20914.22	819.63	47048.76	4771.23	0.0	1268.	
D	0.0				0.00	0.00	0.0	0.0	COMB
F	57460.6	8173.78	17705.24	521.67	39094.16	2866.87	0.0	1268.	

Additional Design Data

M	periphery-O/-I [m2/m]	[m2/m]	deff [mm]	t-min [mm]	t-max [mm]	SMP [o/o]	thet-p [tm2/m]	thet-y [tm2/m]	thet-z [tm2/m]	thet-yz [tm2/m]
	8.023		49.2	45.0	52.0	0.0	1.315	1.283	0.031	

Cross section No. 365.4 = CS 21 - reinf active:C2

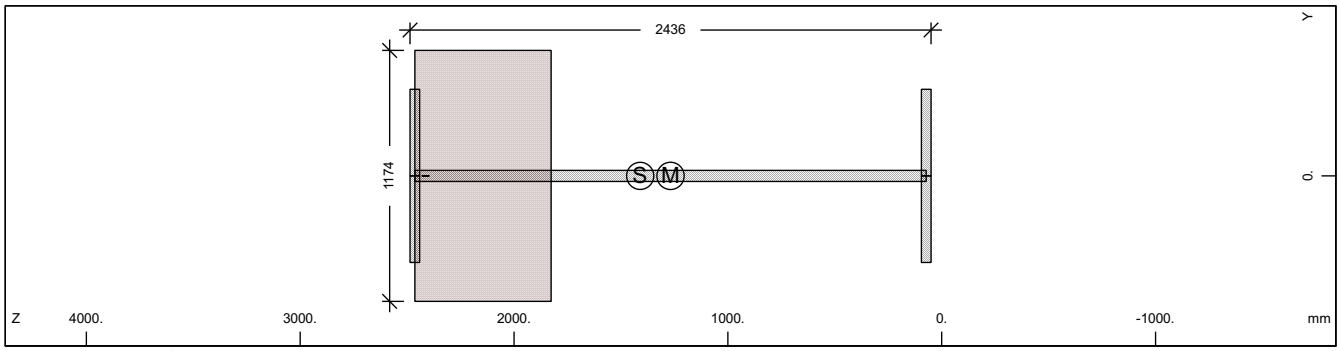

Cross section No. 365

Static properties of cross section

Mat NoR	A[cm2] It[cm4]	Ay/Az/Ayz [cm2]	Iy/Iz/Iyz [cm4]	ys/zs [mm]	modules [N/mm2]	gam [kN/m]
1	2353.23	607.50	18934649.	0.0	210000	34.19
	6270.0	1097.52	398580.9	1410.1	80769	

Additional static properties of cross section

Alfa-T [1/°K]	ymin ymax [mm]	zmin zmax [mm]	hymin hzmin [mm]	AK AB [cm2]	MB	Tau-T Tau-B [1/m3]	Tau-Vy Tau-Vz [1/m2]
1.2E-05	-587.0	-1360.1		5.031E+03		3.386E+00	2.058E+01
	587.0	1076.2		7.483E+03		1.255E+02	9.677E+00

Section values for warping

Wmin[cm2]	Wmax[cm2]	CM[cm6]	CMS[cm4]	ASwyy[cm6]	ASwzz[cm6]	ry[mm]	rz[mm]
-4842.58	4842.585698495102.		8685404.9	-1.63	-77.20	0.0	5.3

Partial cross sections

Mat NoR	A[cm2] It[cm4]	Ay/Az/Ayz [cm2]	Iy/Iz/Iyz [cm4]	ys/zs [mm]	modules [N/mm2]	gam [kN/m]
1	1972.53	607.50	16348703.	0.0	210000	15.48
	16129.1	1090.61	398580.9	1268.2	80769	
25	7483.05		2533488.5	0.0	10667	18.71
	34379041.	125.71	0.0	2145.2	4444	
210	0.64	0.00	0.0	0.0	200000	0.00
	2.2	0.00	0.0	2413.9	76923	

Design values of cross section

Mat NoR	A[cm2] It[cm4]	Ay/Az/Ayz [cm2]	Iy/Iz/Iyz [cm4]	ys/zs [mm]	modules [N/mm2]	gam [kN/m]
1	2264.54	607.50	18406676.	0.0	182609	34.19
	6270.0	1095.91	398580.9	1381.4	70234	

Design forces and moments
(C/E = characteristic plastic/elastic, D=plast.Design, F=elast. Design)

	N[kN]	Vy[kN]	Vz[kN]	Mt[kNm]	My[kNm]	Mz[kNm]	y[mm]	z[mm]	BUCK
C	66111.8	14118.33	36860.26	8197.98	54142.89	8893.83	6.7	1269.	c c
C	-4913.4				54489.36	0.00	0.0	1410.	COMB

SOFiSTiK AG - www.sofistik.de

Composite bridge 38+50+38, b=14.25m, 2x2HL1100R HISTAR460 , slab 0.30m C30/37

Design forces and moments
(C/E = characteristic plastic/elastic, D=plast.Design, F=elast. Design)

	N[kN]	Vy[kN]	Vz[kN]	Mt[kNm]	My[kNm]	Mz[kNm]	y[mm]	z[mm]	BUCK
C	-11224.6				0.00	8781.58	0.0	0.0	COMB
C	-88561.0	14118.33	36860.26	8197.98	-59327.9	-8744.17	-6.7	1788.	
C	-17535.8				-70990.6	0.00	0.0	1410.	COMB
C	-11224.6				0.00	-8781.58	0.0	0.0	COMB
E	78833.2	9399.84	19986.94	4873.01	46635.36	3296.90	0.0	1410.	
E	-78833.2	9399.84	19986.94	4873.01	-46635.4	-3296.90	0.0	1410.	
D	57488.5	12276.81	29547.21	5658.13	47080.78	7025.25	5.1	1269.	
D	-4272.5				47382.05	0.00	0.0	1410.	COMB
D	-7483.1				0.00	6967.73	0.0	0.0	COMB
D	-72454.6	12276.81	29547.21	5658.13	-50056.3	-6948.55	-5.1	1702.	
D	-10693.6				-58382.9	0.00	0.0	1410.	COMB
D	-7483.1				0.00	-6967.73	0.0	0.0	COMB
F	68550.6	8173.78	17379.95	3248.67	40552.48	2866.87	0.0	1410.	
F	-68550.6	8173.78	17379.95	3248.67	-40552.5	-2866.87	0.0	1410.	

Additional Design Data

M	periphery-O/-I [m2/m]	[m2/m]	deff [mm]	t-min [mm]	t-max [mm]	SMP [o/o]	thet-p [tm2/m]	thet-y [tm2/m]	thet-z [tm2/m]	thet-yz [tm2/m]
	9.302		50.6	32.0	637.4	0.0	2.030	1.998	0.031	
1	8.023		49.2	45.0	52.0	0.0	1.315	1.283	0.031	
25	1.275		1174.0			0.0	0.063	0.063		
**	0.004		32.0			0.0	0.000		0.000	

Cross section No. 365.5 = CS 30 - in-situ conc:C3

Cross section No. 366 - VFT (353)

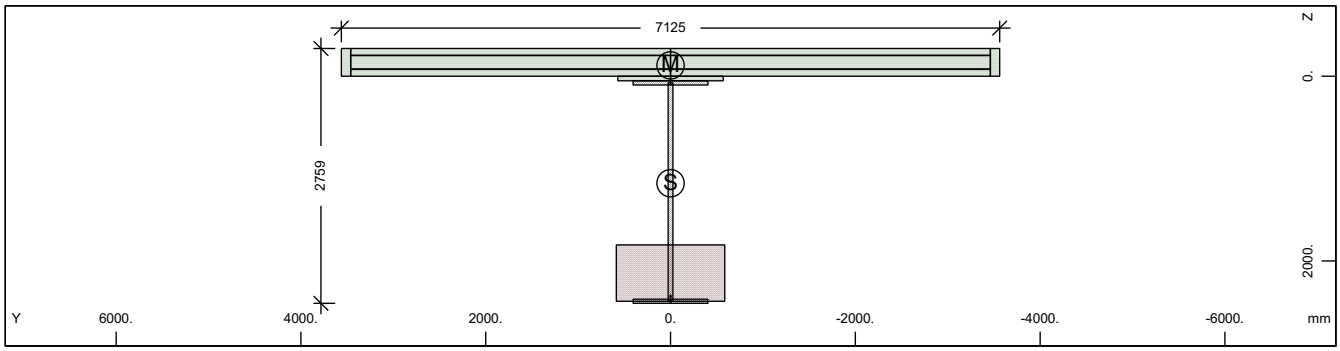

Cross section No. 366 - VFT (353)

Static properties of cross section

Mat NoR	A[cm2] It[cm4]	Ay/Az/Ayz [cm2]	Iy/Iz/Iyz [cm4]	ys/zs [mm]	y/z-sc [mm]	modules [N/mm2]	gam [kN/m]
1	2736.80	361.79	26770887.	0.0	0.0	210000	88.14
	6270.0	820.36	16940770.	1158.8	-117.0	80769	

Additional static properties of cross section

Alfa-T [1/°K]	ymin ymax [mm]	zmin zmax [mm]	hymin hzmin [mm]	AK AB [cm2]	MB	Tau-T Tau-B [1/m3]	Tau-Vy Tau-Vz [1/m2]
1.2E-05	-3562.5	-1458.8		4.817E+03		3.537E+00	3.369E+01
	3562.5	1300.2		2.911E+04		1.255E+02	1.704E+01

Section values for warping

Wmin[cm2]	Wmax[cm2]	CM[cm6]	CMS[cm4]	ASwyy[cm6]	ASwzz[cm6]	ry[mm]	rz[mm]
-10341.69	10341.69	1.418E+10	3250340.4	482.47	762.43	0.0	1703.1

SOFiSTiK AG - www.sofistik.de

Composite bridge 38+50+38, b=14.25m, 2x2HL1100R HISTAR460 , slab 0.30m C30/37

Partial cross sections

Mat NoR	A[cm2] It[cm4]	Ay/Az/Ayz [cm2]	Iy/Iz/Iyz [cm4]	ys/zs [mm]	modules [N/mm2]	gam [kN/m]
1	1958.31	0.12	15910660.	0.0	210000	15.37
	16000.9	547.54	398580.9	1254.5	80769	
25	7161.97		2221161.0	0.0	10667	17.90
	32903907.	57.37	0.0	2131.5	4444	
210	0.64	0.00	0.0	0.0	200000	0.00
	2.2	0.00	0.0	2386.5	76923	
31	21945.00	17840.36	170028.4	0.0	0	54.86
	6417251.4	12400.64	904880243.	-145.5	0	
300	434.80	379.76	24457.8	0.0	200000	0.00
	14.3	282.61	17369294.	-150.0	76923	

Design values of cross section

Mat NoR	A[cm2] It[cm4]	Ay/Az/Ayz [cm2]	Iy/Iz/Iyz [cm4]	ys/zs [mm]	modules [N/mm2]	gam [kN/m]
1	2651.92	361.79	25915760.	0.0	182609	88.14
	6270.0	819.11	16940770.	1127.7	70234	

Design forces and moments
(C/E = characteristic plastic/elastic, D=plast.Design, F=elast. Design)

	N[kN]	Vy[kN]	Vz[kN]	Mt[kNm]	My[kNm]	Mz[kNm]	y[mm]	z[mm]	BUCK
C	87375.6	62879.30	64855.86	106466.6	94346.70	103595.9	25.2	-74.1	c c
C	-84209.3				167727.0	0.00	0.0	1159.	COMB
C	-43660.5				0.00	103619.4	0.0	0.0	COMB
C	-162615.	62879.30	64855.85	106466.6	-102619.	-103053.	-25.2	1248.	
C	-3111.6				-102758.	0.00	0.0	1159.	COMB
C	-43660.5				0.00	-103619.	0.0	0.0	COMB
E	91682.8	8569.44	16938.41	4665.39	68975.20	25691.40	0.0	1159.	
E	-91682.8	8569.44	16938.41	4665.39	-68975.2	-25691.4	0.0	1159.	
D	75978.8	47330.86	48691.35	71186.58	80807.25	77822.34	20.0	-32.1	
D	-59867.6				128427.1	0.00	0.0	1159.	COMB
D	-29107.0				0.00	77826.87	0.0	0.0	COMB
D	-126138.	47330.86	48691.34	71186.56	-85069.4	-77535.9	-20.0	1104.	
D	1653.7				-85114.5	0.00	0.0	1159.	COMB
D	-29107.0				0.00	-77826.9	0.0	0.0	COMB
F	79724.2	7451.69	14729.05	3110.26	59978.43	22340.35	0.0	1159.	
F	-79724.2	7451.69	14729.05	3110.26	-59978.4	-22340.4	0.0	1159.	

Additional Design Data

M	periphery-O/-I [m2/m]	[m2/m]	deff [mm]	t-min [mm]	t-max [mm]	SMP [o/o]	thet-p [tm2/m]	thet-y [tm2/m]	thet-z [tm2/m]	thet-yz [tm2/m]
	53.417		10.2	3.1	610.0	0.0	31.856	9.203	22.653	
1	7.968		49.2	45.0	52.0	0.0	1.280	1.249	0.031	
25	1.220		1174.0			0.0	0.056	0.056		
**	0.004		32.0			0.0	0.000		0.000	
31	16.530		265.5	50.0	300.0	0.0	22.626	0.004	22.622	
**	27.695		3.1	3.1	3.1	0.0	0.000	0.000	0.000	

SOFiSTiK AG - www.sofistik.de

Composite bridge 38+50+38, b=14.25m, 2x2HL1100R HISTAR460 , slab 0.30m C30/37

Cross section No. 366.1 = CS 1 - steel alone

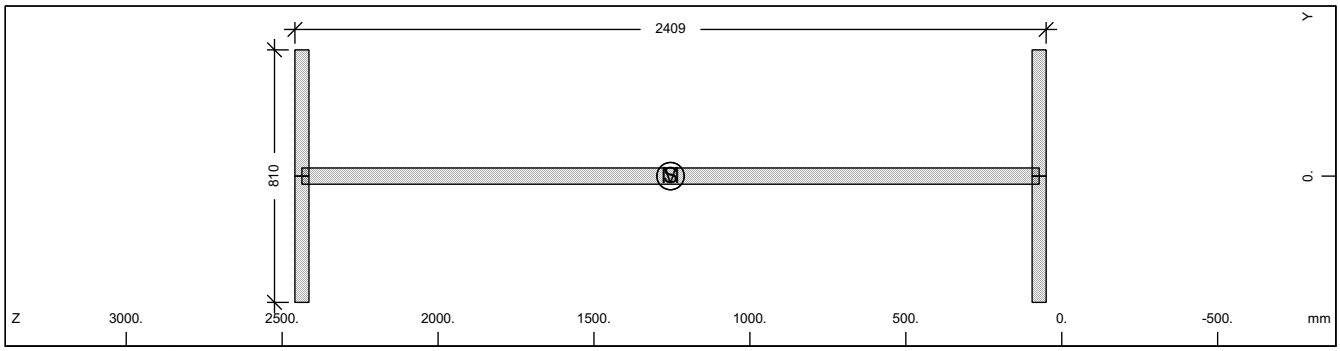

Cross section No. 366

Static properties of cross section

Mat NoR	A[cm2] It[cm4]	Ay/Az/Ayz [cm2]	Iy/Iz/Iyz [cm4]	ys/zs [mm]	modules [N/mm2]	gam [kN/m]
1	1958.31	607.50	15910660.	0.0	210000	15.37
	6270.0	1167.50	398580.9	1254.5	80769	

Additional static properties of cross section

Alfa-T [1/°K]	ymin ymax [mm]	zmin zmax [mm]	hymin hzmin [mm]	AK AB [cm2]	MB	Tau-T Tau-B [1/m3]	Tau-Vy Tau-Vz [1/m2]
1.2E-05	-405.0	-1204.5		1.183E+03		3.250E+02	2.058E+01
	405.0	1204.5				1.255E+02	9.598E+00

Section values for warping

Wmin[cm2]	Wmax[cm2]	CM[cm6]	CMS[cm4]	ASwyy[cm6]	ASwzz[cm6]	ry[mm]	rz[mm]
-4787.20	4787.205	568897374.	8487877.3	-6.78	-270.65	0.0	0.0

Design values of cross section

Mat NoR	A[cm2] It[cm4]	Ay/Az/Ayz [cm2]	Iy/Iz/Iyz [cm4]	ys/zs [mm]	modules [N/mm2]	gam [kN/m]
1	1958.31	607.50	15910660.	0.0	182609	15.37
	6270.0	1167.50	398580.9	1254.5	70234	

Design forces and moments
(C/E = characteristic plastic/elastic, D=plast.Design, F=elast. Design)

	N[kN]	Vy[kN]	Vz[kN]	Mt[kNm]	My[kNm]	Mz[kNm]	y[mm]	z[mm]	BUCK
C	65603.2	14099.76	23776.28	935.43	53205.71	5480.72	0.0	1255.	c c
C	0.0				0.00	0.00	0.0	0.0	COMB
E	65603.2	9399.84	20150.80	595.15	44250.44	3296.90	0.0	1255.	
D	57046.3	12260.66	20675.03	813.42	46265.83	4765.84	0.0	1255.	
D	0.0				0.00	0.00	0.0	0.0	COMB
F	57046.3	8173.78	17522.44	517.52	38478.64	2866.87	0.0	1255.	

Additional Design Data

M	periphery-O/-I [m2/m] [m2/m]	deff [mm]	t-min [mm]	t-max [mm]	SMP [o/o]	thet-p [tm2/m]	thet-y [tm2/m]	thet-z [tm2/m]	thet-yz [tm2/m]
	7.968	49.2	45.0	52.0	0.0	1.280	1.249	0.031	

SOFiSTiK AG - www.sofistik.de

Composite bridge 38+50+38, b=14.25m, 2x2HL1100R HISTAR460 , slab 0.30m C30/37

Cross section No. 366.2 = CS 10 - prefab. slab C1

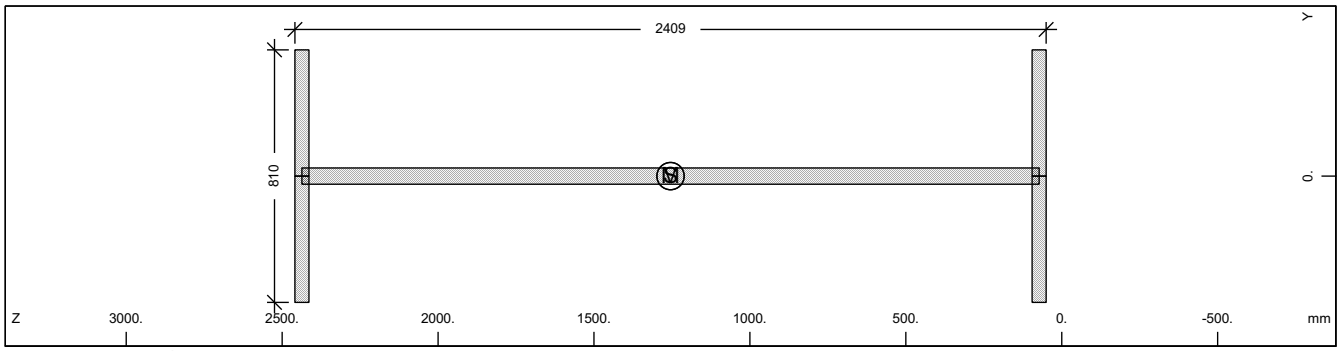

Cross section No. 366

Static properties of cross section

Mat NoR	A[cm2] It[cm4]	Ay/Az/Ayz [cm2]	Iy/Iz/Iyz [cm4]	ys/zs [mm]	modules [N/mm2]	gam [kN/m]
1	1958.31	607.50	15910660.	0.0	210000	15.37
	6270.0	1167.50	398580.9	1254.5	80769	

Additional static properties of cross section

Alfa-T [1/°K]	ymin ymax [mm]	zmin zmax [mm]	hymin hzmin [mm]	AK AB [cm2]	MB	Tau-T Tau-B [1/m3]	Tau-Vy Tau-Vz [1/m2]
1.2E-05	-405.0	-1204.5		1.183E+03		3.250E+02	2.058E+01
	405.0	1204.5				1.255E+02	9.598E+00

Section values for warping

Wmin[cm2]	Wmax[cm2]	CM[cm6]	CMS[cm4]	ASwyy[cm6]	ASwzz[cm6]	ry[mm]	rz[mm]
-4787.20	4787.205	568897374.	8487877.3	-6.78	-270.65	0.0	0.0

Design values of cross section

Mat NoR	A[cm2] It[cm4]	Ay/Az/Ayz [cm2]	Iy/Iz/Iyz [cm4]	ys/zs [mm]	modules [N/mm2]	gam [kN/m]
1	1958.31	607.50	15910660.	0.0	182609	15.37
	6270.0	1167.50	398580.9	1254.5	70234	

Design forces and moments
(C/E = characteristic plastic/elastic, D=plast.Design, F=elast. Design)

	N[kN]	Vy[kN]	Vz[kN]	Mt[kNm]	My[kNm]	Mz[kNm]	y[mm]	z[mm]	BUCK
C	65603.2	14099.76	23776.28	935.43	53205.71	5480.72	0.0	1255.	c c
C	0.0				0.00	0.00	0.0	0.0	COMB
E	65603.2	9399.84	20150.80	595.15	44250.44	3296.90	0.0	1255.	
D	57046.3	12260.66	20675.03	813.42	46265.83	4765.84	0.0	1255.	
D	0.0				0.00	0.00	0.0	0.0	COMB
F	57046.3	8173.78	17522.44	517.52	38478.64	2866.87	0.0	1255.	

Additional Design Data

M	periphery-O/-I [m2/m] [m2/m]	deff [mm]	t-min [mm]	t-max [mm]	SMP [o/o]	thet-p [tm2/m]	thet-y [tm2/m]	thet-z [tm2/m]	thet-yz [tm2/m]
	7.968	49.2	45.0	52.0	0.0	1.280	1.249	0.031	

SOFiSTiK AG - www.sofistik.de

Composite bridge 38+50+38, b=14.25m, 2x2HL1100R HISTAR460 , slab 0.30m C30/37

Cross section No. 366.3 = CS 20 - in-situ conc:C2

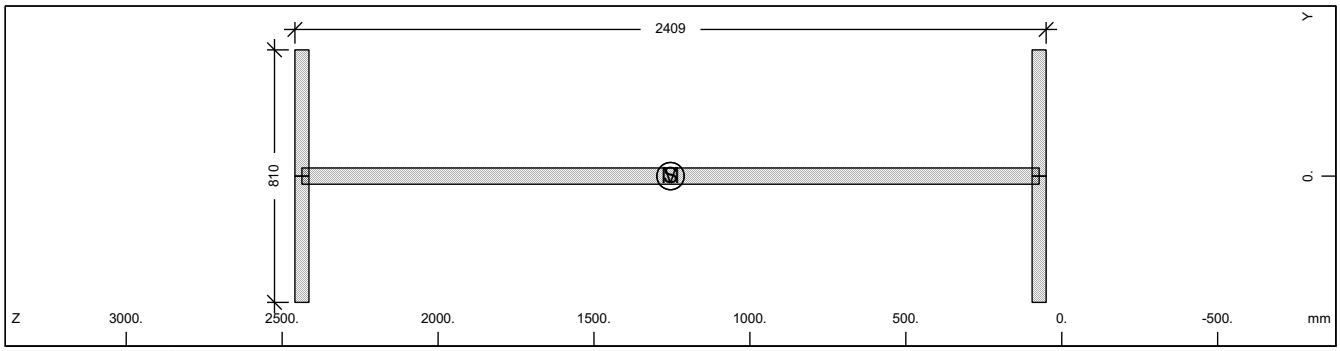

Cross section No. 366

Static properties of cross section

Mat NoR	A[cm2] It[cm4]	Ay/Az/Ayz [cm2]	Iy/Iz/Iyz [cm4]	ys/zs [mm]	modules [N/mm2]	gam [kN/m]
1	1958.31	607.50	15910660.	0.0	210000	15.37
	6270.0	1167.50	398580.9	1254.5	80769	

Additional static properties of cross section

Alfa-T [1/°K]	ymin ymax [mm]	zmin zmax [mm]	hymin hzmin [mm]	AK AB [cm2]	MB	Tau-T Tau-B [1/m3]	Tau-Vy Tau-Vz [1/m2]
1.2E-05	-405.0	-1204.5		1.183E+03		3.250E+02	2.058E+01
	405.0	1204.5				1.255E+02	9.598E+00

Section values for warping

Wmin[cm2]	Wmax[cm2]	CM[cm6]	CMS[cm4]	ASwyy[cm6]	ASwzz[cm6]	ry[mm]	rz[mm]
-4787.20	4787.205	568897374.	8487877.3	-6.78	-270.65	0.0	0.0

Design values of cross section

Mat NoR	A[cm2] It[cm4]	Ay/Az/Ayz [cm2]	Iy/Iz/Iyz [cm4]	ys/zs [mm]	modules [N/mm2]	gam [kN/m]
1	1958.31	607.50	15910660.	0.0	182609	15.37
	6270.0	1167.50	398580.9	1254.5	70234	

Design forces and moments
(C/E = characteristic plastic/elastic, D=plast.Design, F=elast. Design)

	N[kN]	Vy[kN]	Vz[kN]	Mt[kNm]	My[kNm]	Mz[kNm]	y[mm]	z[mm]	BUCK
C	65603.2	14099.76	23776.28	935.43	53205.71	5480.72	0.0	1255.	c c
C	0.0				0.00	0.00	0.0	0.0	COMB
E	65603.2	9399.84	20150.80	595.15	44250.44	3296.90	0.0	1255.	
D	57046.3	12260.66	20675.03	813.42	46265.83	4765.84	0.0	1255.	
D	0.0				0.00	0.00	0.0	0.0	COMB
F	57046.3	8173.78	17522.44	517.52	38478.64	2866.87	0.0	1255.	

Additional Design Data

M	periphery-O/-I [m2/m] [m2/m]	deff [mm]	t-min [mm]	t-max [mm]	SMP [o/o]	thet-p [tm2/m]	thet-y [tm2/m]	thet-z [tm2/m]	thet-yz [tm2/m]
	7.968	49.2	45.0	52.0	0.0	1.280	1.249	0.031	

SOFiSTiK AG - www.sofistik.de

Composite bridge 38+50+38, b=14.25m, 2x2HL1100R HISTAR460 , slab 0.30m C30/37

Cross section No. 366.4 = CS 21 - reinf active:C2

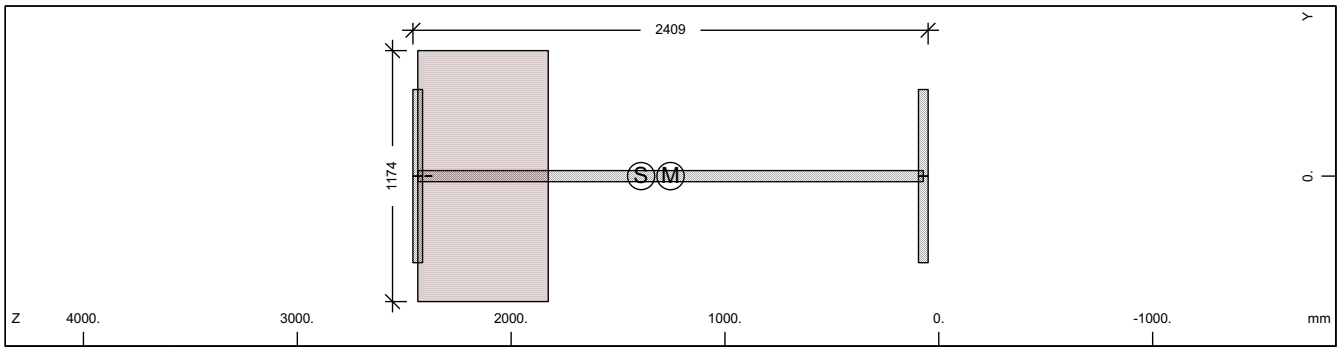

Cross section No. 366

Static properties of cross section

Mat NoR	A[cm2] It[cm4]	Ay/Az/Ayz [cm2]	Iy/Iz/Iyz [cm4]	ys/zs [mm]	modules [N/mm2]	gam [kN/m]
1	2322.70	607.50	18389163.	0.0	210000	33.28
	6270.0	1088.82	398580.9	1392.2	80769	

Additional static properties of cross section

Alfa-T [1/°K]	ymin ymax [mm]	zmin zmax [mm]	hymin hzmin [mm]	AK AB [cm2]	MB	Tau-T Tau-B [1/m3]	Tau-Vy Tau-Vz [1/m2]
1.2E-05	-587.0	-1342.2		4.817E+03		3.537E+00	2.058E+01
	587.0	1066.9		7.162E+03		1.255E+02	9.766E+00

Section values for warping

Wmin[cm2]	Wmax[cm2]	CM[cm6]	CMS[cm4]	ASwyy[cm6]	ASwzz[cm6]	ry[mm]	rz[mm]
-4787.20	4787.20	5568897374.	8487877.3	-1.16	-53.51	0.0	6.1

Partial cross sections

Mat NoR	A[cm2] It[cm4]	Ay/Az/Ayz [cm2]	Iy/Iz/Iyz [cm4]	ys/zs [mm]	modules [N/mm2]	gam [kN/m]
1	1958.31	607.50	15910660.	0.0	210000	15.37
	16000.9	1082.34	398580.9	1254.5	80769	
25	7161.97		2221161.0	0.0	10667	17.90
	32903907.	117.62	0.0	2131.5	4444	
210	0.64	0.00	0.0	0.0	200000	0.00
	2.2	0.00	0.0	2386.5	76923	

Design values of cross section

Mat NoR	A[cm2] It[cm4]	Ay/Az/Ayz [cm2]	Iy/Iz/Iyz [cm4]	ys/zs [mm]	modules [N/mm2]	gam [kN/m]
1	2237.82	607.50	17881243.	0.0	182609	33.28
	6270.0	1087.31	398580.9	1364.1	70234	

Design forces and moments
(C/E = characteristic plastic/elastic, D=plast.Design, F=elast. Design)

	N[kN]	Vy[kN]	Vz[kN]	Mt[kNm]	My[kNm]	Mz[kNm]	y[mm]	z[mm]	BUCK
C	65635.4	14118.33	36055.41	7879.84	53242.09	8738.04	6.5	1256.	c c
C	-4763.7				53567.77	0.00	0.0	1392.	COMB
C	-10743.0				0.00	8634.03	0.0	0.0	COMB
C	-87121.3	14118.33	36055.41	7879.84	-58086.3	-8599.36	-6.5	1759.	
C	-16722.2				-69453.3	0.00	0.0	1392.	COMB
C	-10743.0				0.00	-8634.03	0.0	0.0	COMB
E	77810.5	9399.84	19805.38	4665.36	45898.28	3296.90	0.0	1392.	
E	-77810.5	9399.84	19805.38	4665.36	-45898.3	-3296.90	0.0	1392.	
D	57074.2	12276.81	28954.83	5444.58	46297.47	6921.40	5.0	1256.	
D	-4142.4				46580.67	0.00	0.0	1392.	COMB
D	-7162.0				0.00	6868.10	0.0	0.0	COMB
D	-71398.2	12276.81	28954.83	5444.58	-49074.5	-6850.34	-5.0	1675.	
D	-10181.6				-57171.0	0.00	0.0	1392.	COMB
D	-7162.0				0.00	-6868.10	0.0	0.0	COMB

SOFiSTiK AG - www.sofistik.de

Composite bridge 38+50+38, b=14.25m, 2x2HL1100R HISTAR460 , slab 0.30m C30/37

Design forces and moments
(C/E = characteristic plastic/elastic, D=plast.Design, F=elast. Design)

	N[kN]	Vy[kN]	Vz[kN]	Mt[kNm]	My[kNm]	Mz[kNm]	y[mm]	z[mm]	BUCK
F	67661.3	8173.78	17222.07	3110.24	39911.55	2866.87	0.0	1392.	
F	-67661.3	8173.78	17222.07	3110.24	-39911.6	-2866.87	0.0	1392.	

Additional Design Data

M	periphery-O/-I [m2/m]	[m2/m]	deff [mm]	t-min [mm]	t-max [mm]	SMP [o/o]	thet-p [tm2/m]	thet-y [tm2/m]	thet-z [tm2/m]	thet-yz [tm2/m]
	9.192		50.5	32.0	610.0	0.0	1.972	1.941	0.031	
1	7.968		49.2	45.0	52.0	0.0	1.280	1.249	0.031	
25	1.220		1174.0			0.0	0.056	0.056		
**	0.004		32.0			0.0	0.000		0.000	

Cross section No. 366.5 = CS 30 - in-situ conc:C3

Cross section No. 367 - VFT (353)

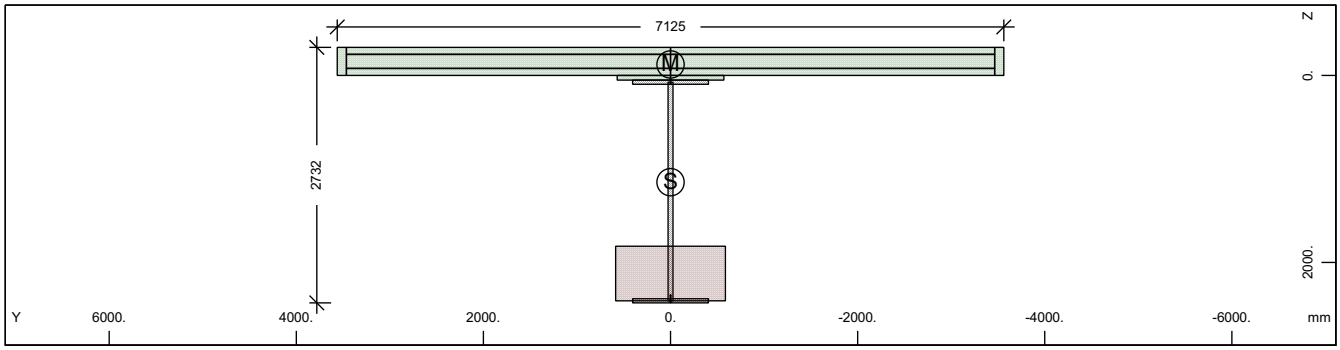

Cross section No. 367 - VFT (353)

Static properties of cross section

Mat NoR	A[cm2] It[cm4]	Ay/Az/Ayz [cm2]	Iy/Iz/Iyz [cm4]	ys/zs [mm]	y/z-sc [mm]	modules [N/mm2]	gam [kN/m]
1	2707.49	362.04	26049078.	0.0	0.0	210000	87.25
	6270.0	808.91	16979809.	1141.3	-117.3	80769	

Additional static properties of cross section

Alfa-T [1/°K]	ymin ymax [mm]	zmin zmax [mm]	hymin hzmin [mm]	AK AB [cm2]	MB	Tau-T Tau-B [1/m3]	Tau-Vy Tau-Vz [1/m2]
1.2E-05	-3562.5	-1441.3		4.609E+03		3.696E+00	3.366E+01
	3562.5	1291.2		2.880E+04		1.255E+02	1.731E+01

Section values for warping

Wmin[cm2]	Wmax[cm2]	CM[cm6]	CMS[cm4]	ASwyy[cm6]	ASwzz[cm6]	ry[mm]	rz[mm]
-10235.72	10235.72	1.391E+10	3137868.7	-63.84	-97.94	0.0	1666.1

Partial cross sections

Mat NoR	A[cm2] It[cm4]	Ay/Az/Ayz [cm2]	Iy/Iz/Iyz [cm4]	ys/zs [mm]	modules [N/mm2]	gam [kN/m]
1	1944.50	0.12	15492408.	0.0	210000	15.26
	15876.4	535.84	398580.9	1241.2	80769	
25	6850.26		1943584.4	0.0	10667	17.13
	31471825.	52.41	0.0	2118.2	4444	
210	0.64	0.00	0.0	0.0	200000	0.00
	2.2	0.00	0.0	2360.0	76923	
31	21945.00	17782.45	170028.4	0.0	0	54.86
	6417251.4	12394.43	904880243.	-145.5	0	
300	435.15	380.02	24477.0	0.0	200000	0.00
	14.3	283.16	17410284.	-150.0	76923	

SOFiSTiK AG - www.sofistik.de

Composite bridge 38+50+38, b=14.25m, 2x2HL1100R HISTAR460 , slab 0.30m C30/37

Design values of cross section

Mat NoR	A[cm2] It[cm4]	Ay/Az/Ayz [cm2]	Iy/Iz/Iyz [cm4]	ys/zs [mm]	modules [N/mm2]	gam [kN/m]
1	2626.30	362.04	25227130.	0.0	182609	87.25
	6270.0	807.72	16979808.	1111.1	70234	

Design forces and moments
(C/E = characteristic plastic/elastic, D=plast.Design, F=elast. Design)

	N[kN]	Vy[kN]	Vz[kN]	Mt[kNm]	My[kNm]	Mz[kNm]	y[mm]	z[mm]	BUCK
C	86930.2	62889.17	64074.50	106157.7	92867.85	103501.0	25.6	-74.1	c c
C	-84076.4				165356.0	0.00	0.0	1141.	COMB
C	-43192.9				0.00	103535.4	0.0	0.0	COMB
C	-161561.	62889.17	64074.49	106157.7	-100647.	-102974.	-25.6	1208.	
C	-2309.4				-100723.	0.00	0.0	1141.	COMB
C	-43192.9				0.00	-103535.	0.0	0.0	COMB
E	90700.8	8575.70	16680.66	4463.80	67581.73	25730.38	0.0	1141.	
E	-90700.8	8575.70	16680.66	4463.80	-67581.7	-25730.4	0.0	1141.	
D	75591.5	47339.43	48116.26	70979.28	79538.17	77767.73	20.0	-35.1	
D	-59752.1				126600.2	0.00	0.0	1141.	COMB
D	-28795.3				0.00	77781.62	0.0	0.0	COMB
D	-125345.	47339.43	48116.25	70979.27	-83434.7	-77493.7	-20.0	1070.	
D	2161.6				-83511.8	0.00	0.0	1141.	COMB
D	-28795.3				0.00	-77781.6	0.0	0.0	COMB
F	78870.2	7457.13	14504.93	2975.87	58766.72	22374.25	0.0	1141.	
F	-78870.2	7457.13	14504.93	2975.87	-58766.7	-22374.2	0.0	1141.	

Additional Design Data

M	periphery-O/-I [m2/m]	[m2/m]	deff [mm]	t-min [mm]	t-max [mm]	SMP [o/o]	thet-p [tm2/m]	thet-y [tm2/m]	thet-z [tm2/m]	thet-yz [tm2/m]
	53.332		10.2	3.1	583.5	0.0	31.516	8.863	22.653	
1	7.915		49.1	45.0	52.0	0.0	1.247	1.216	0.031	
25	1.167		1174.0			0.0	0.049	0.049		
**	0.004		32.0			0.0	0.000		0.000	
31	16.530		265.5	50.0	300.0	0.0	22.626	0.004	22.622	
**	27.716		3.1	3.1	3.1	0.0	0.000	0.000	0.000	

Cross section No. 367.1 = CS 1 - steel alone

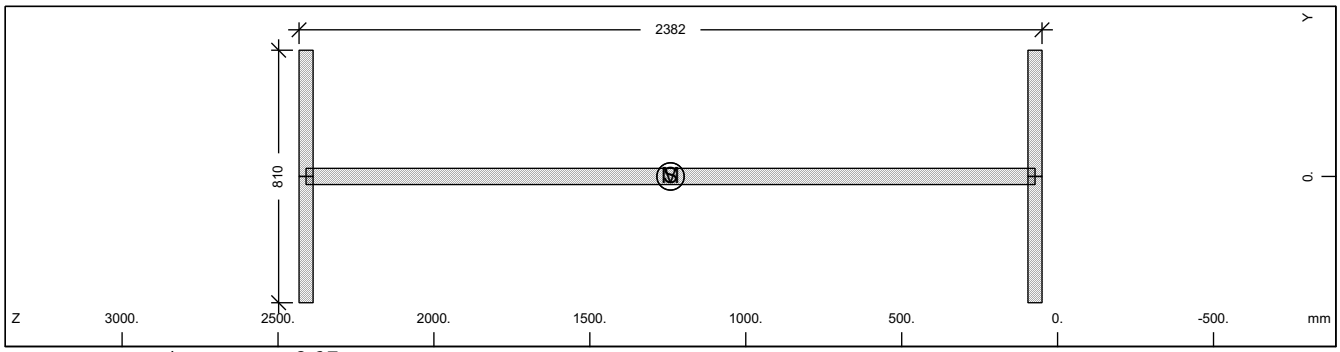

Cross section No. 367

Static properties of cross section

Mat NoR	A[cm2] It[cm4]	Ay/Az/Ayz [cm2]	Iy/Iz/Iyz [cm4]	ys/zs [mm]	modules [N/mm2]	gam [kN/m]
1	1944.50	607.50	15492408.	0.0	210000	15.26
	6270.0	1154.21	398580.9	1241.2	80769	

Additional static properties of cross section

Alfa-T [1/°K]	ymin ymax [mm]	zmin zmax [mm]	hymin hzmin [mm]	AK AB [cm2]	MB	Tau-T Tau-B [1/m3]	Tau-Vy Tau-Vz [1/m2]
1.2E-05	-405.0	-1191.2		1.174E+03		3.275E+02	2.058E+01
	405.0	1191.2				1.255E+02	9.697E+00

SOFiSTiK AG - www.sofistik.de

Composite bridge 38+50+38, b=14.25m, 2x2HL1100R HISTAR460 , slab 0.30m C30/37

Section values for warping

Wmin[cm2]	Wmax[cm2]	CM[cm6]	CMS[cm4]	ASwyy[cm6]	ASwzz[cm6]	ry[mm]	rz[mm]
-4733.43	4733.435444508068.	8298288.3		1.63	63.54	0.0	0.0

Design values of cross section

Mat NoR	A[cm2] It[cm4]	Ay/Az/Ayz [cm2]	Iy/Iz/Iyz [cm4]	ys/zs [mm]	modules [N/mm2]	gam [kN/m]
1	1944.50	607.50	15492408.	0.0	182609	15.26
	6270.0	1154.21	398580.9	1241.2	70234	

Design forces and moments
(C/E = characteristic plastic/elastic, D=plast.Design, F=elast. Design)

	N[kN]	Vy[kN]	Vz[kN]	Mt[kNm]	My[kNm]	Mz[kNm]	y[mm]	z[mm]	BUCK
C	65140.7	14099.76	23509.24	928.48	52337.86	5474.70	0.0	1241.	c c
C	0.0				0.00	0.00	0.0	0.0	COMB
E	65140.7	9399.84	19946.44	590.52	43567.35	3296.90	0.0	1241.	
D	56644.1	12260.66	20442.82	807.38	45511.18	4760.61	0.0	1241.	
D	0.0				0.00	0.00	0.0	0.0	COMB
F	56644.1	8173.78	17344.73	513.50	37884.66	2866.87	0.0	1241.	

Additional Design Data

M	periphery-O/-I [m2/m]	[m2/m]	deff [mm]	t-min [mm]	t-max [mm]	SMP [o/o]	thet-p [tm2/m]	thet-y [tm2/m]	thet-z [tm2/m]	thet-yz [tm2/m]
	7.915		49.1	45.0	52.0	0.0	1.247	1.216	0.031	

Cross section No. 367.2 = CS 10 - prefab. slab C1

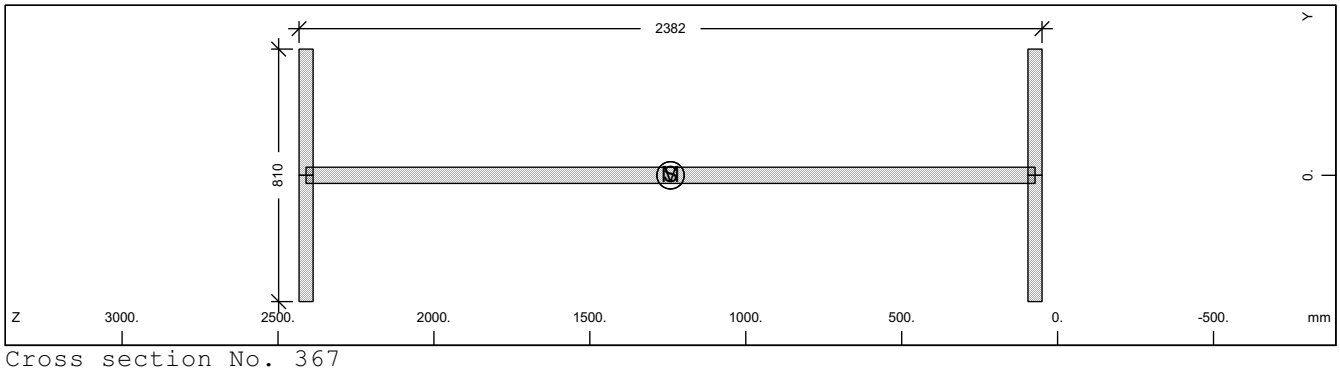

Cross section No. 367

Static properties of cross section

Mat NoR	A[cm2] It[cm4]	Ay/Az/Ayz [cm2]	Iy/Iz/Iyz [cm4]	ys/zs [mm]	modules [N/mm2]	gam [kN/m]
1	1944.50	607.50	15492408.	0.0	210000	15.26
	6270.0	1154.21	398580.9	1241.2	80769	

Additional static properties of cross section

Alfa-T [1/°K]	ymin ymax [mm]	zmin zmax [mm]	hymin hzmin [mm]	AK AB [cm2]	MB	Tau-T Tau-B [1/m3]	Tau-Vy Tau-Vz [1/m2]
1.2E-05	-405.0	-1191.2		1.174E+03		3.275E+02	2.058E+01
	405.0	1191.2				1.255E+02	9.697E+00

Section values for warping

Wmin[cm2]	Wmax[cm2]	CM[cm6]	CMS[cm4]	ASwyy[cm6]	ASwzz[cm6]	ry[mm]	rz[mm]
-4733.43	4733.435444508068.	8298288.3		1.63	63.54	0.0	0.0

Design values of cross section

Mat NoR	A[cm2] It[cm4]	Ay/Az/Ayz [cm2]	Iy/Iz/Iyz [cm4]	ys/zs [mm]	modules [N/mm2]	gam [kN/m]
1	1944.50	607.50	15492408.	0.0	182609	15.26
	6270.0	1154.21	398580.9	1241.2	70234	

SOFiSTiK AG - www.sofistik.de

Composite bridge 38+50+38, b=14.25m, 2x2HL1100R HISTAR460 , slab 0.30m C30/37

Design forces and moments
(C/E = characteristic plastic/elastic, D=plast.Design, F=elast. Design)

	N[kN]	Vy[kN]	Vz[kN]	Mt[kNm]	My[kNm]	Mz[kNm]	y[mm]	z[mm]	BUCK
C	65140.7	14099.76	23509.24	928.48	52337.86	5474.70	0.0	1241.	c c
C	0.0				0.00	0.00	0.0	0.0	COMB
E	65140.7	9399.84	19946.44	590.52	43567.35	3296.90	0.0	1241.	
D	56644.1	12260.66	20442.82	807.38	45511.18	4760.61	0.0	1241.	
D	0.0				0.00	0.00	0.0	0.0	COMB
F	56644.1	8173.78	17344.73	513.50	37884.66	2866.87	0.0	1241.	

Additional Design Data

M	periphery-O/-I [m2/m]	[m2/m]	deff [mm]	t-min [mm]	t-max [mm]	SMP [o/o]	thet-p [tm2/m]	thet-y [tm2/m]	thet-z [tm2/m]	thet-yz [tm2/m]
	7.915		49.1	45.0	52.0	0.0	1.247	1.216	0.031	

Cross section No. 367.3 = CS 20 - in-situ conc:C2

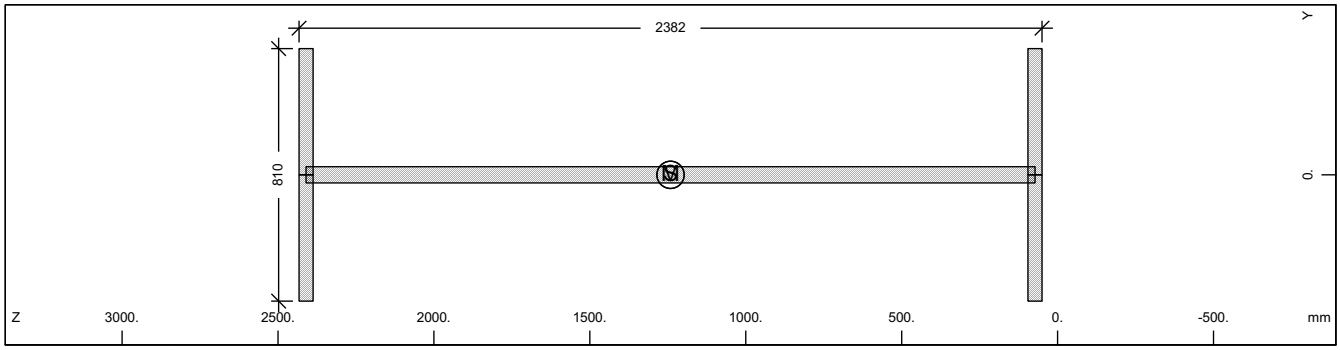

Cross section No. 367

Static properties of cross section

Mat NoR	A[cm2] It[cm4]	Ay/Az/Ayz [cm2]	Iy/Iz/Iyz [cm4]	ys/zs [mm]	modules [N/mm2]	gam [kN/m]
1	1944.50	607.50	15492408.	0.0	210000	15.26
	6270.0	1154.21	398580.9	1241.2	80769	

Additional static properties of cross section

Alfa-T [1/°K]	ymin ymax [mm]	zmin zmax [mm]	hymin hzmin [mm]	AK AB [cm2]	MB	Tau-T Tau-B [1/m3]	Tau-Vy Tau-Vz [1/m2]
1.2E-05	-405.0	-1191.2		1.174E+03		3.275E+02	2.058E+01
	405.0	1191.2				1.255E+02	9.697E+00

Section values for warping

Wmin[cm2]	Wmax[cm2]	CM[cm6]	CMS[cm4]	ASwyy[cm6]	ASwzz[cm6]	ry[mm]	rz[mm]
-4733.43	4733.435444508068.		8298288.3	1.63	63.54	0.0	0.0

Design values of cross section

Mat NoR	A[cm2] It[cm4]	Ay/Az/Ayz [cm2]	Iy/Iz/Iyz [cm4]	ys/zs [mm]	modules [N/mm2]	gam [kN/m]
1	1944.50	607.50	15492408.	0.0	182609	15.26
	6270.0	1154.21	398580.9	1241.2	70234	

Design forces and moments
(C/E = characteristic plastic/elastic, D=plast.Design, F=elast. Design)

	N[kN]	Vy[kN]	Vz[kN]	Mt[kNm]	My[kNm]	Mz[kNm]	y[mm]	z[mm]	BUCK
C	65140.7	14099.76	23509.24	928.48	52337.86	5474.70	0.0	1241.	c c
C	0.0				0.00	0.00	0.0	0.0	COMB
E	65140.7	9399.84	19946.44	590.52	43567.35	3296.90	0.0	1241.	
D	56644.1	12260.66	20442.82	807.38	45511.18	4760.61	0.0	1241.	
D	0.0				0.00	0.00	0.0	0.0	COMB
F	56644.1	8173.78	17344.73	513.50	37884.66	2866.87	0.0	1241.	

SOFiSTiK AG - www.sofistik.de

Composite bridge 38+50+38, b=14.25m, 2x2HL1100R HISTAR460 , slab 0.30m C30/37

Additional Design Data

M	periphery-O/-I [m2/m]	[m2/m]	deff [mm]	t-min [mm]	t-max [mm]	SMP [o/o]	thet-p [tm2/m]	thet-y [tm2/m]	thet-z [tm2/m]	thet-yz [tm2/m]
	7.915		49.1	45.0	52.0	0.0	1.247	1.216	0.031	

Cross section No. 367.4 = CS 21 - reinf active:C2

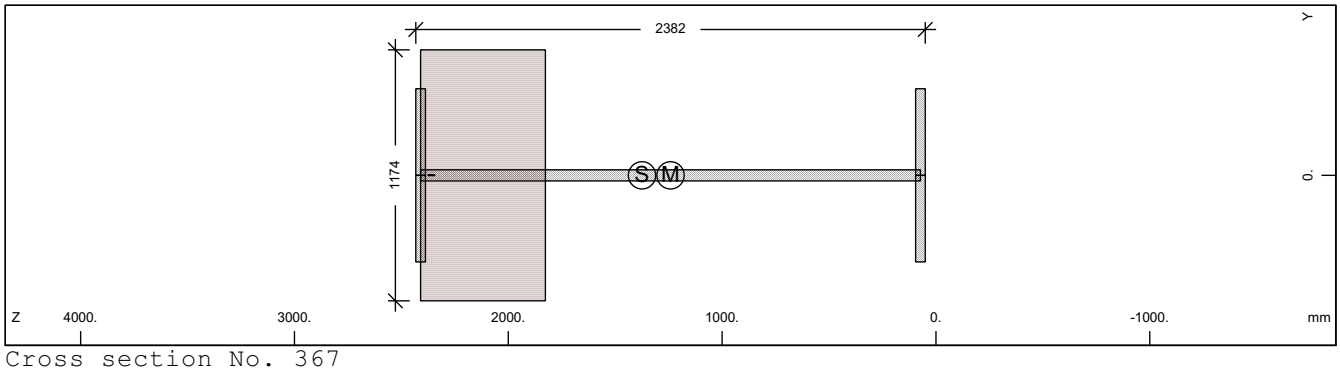

Cross section No. 367

Static properties of cross section

Mat NoR	A[cm2] It[cm4]	Ay/Az/Ayz [cm2]	Iy/Iz/Iyz [cm4]	ys/zs [mm]	modules [N/mm2]	gam [kN/m]
1	2293.06	607.50	17867068.	0.0	210000	32.39
	6270.0	1080.39	398580.9	1374.6	80769	

Additional static properties of cross section

Alfa-T [1/°K]	ymin ymax [mm]	zmin zmax [mm]	hymin hzmin [mm]	AK AB [cm2]	MB	Tau-T Tau-B [1/m3]	Tau-Vy Tau-Vz [1/m2]
1.2E-05	-587.0	-1324.6		4.609E+03		3.696E+00	2.058E+01
	587.0	1057.9		6.850E+03		1.255E+02	9.853E+00

Section values for warping

Wmin[cm2]	Wmax[cm2]	CM[cm6]	CMS[cm4]	ASwyy[cm6]	ASwzz[cm6]	ry[mm]	rz[mm]
-4733.43	4733.435444508533.		8298289.1	-1.99	-89.32	0.0	7.0

Partial cross sections

Mat NoR	A[cm2] It[cm4]	Ay/Az/Ayz [cm2]	Iy/Iz/Iyz [cm4]	ys/zs [mm]	modules [N/mm2]	gam [kN/m]
1	1944.50	607.50	15492408.	0.0	210000	15.26
	15876.4	1074.35	398580.9	1241.2	80769	
25	6850.26		1943584.4	0.0	10667	17.13
	31471825.	109.72	0.0	2118.2	4444	
210	0.64	0.00	0.0	0.0	200000	0.00
	2.2	0.00	0.0	2360.0	76923	

Design values of cross section

Mat NoR	A[cm2] It[cm4]	Ay/Az/Ayz [cm2]	Iy/Iz/Iyz [cm4]	ys/zs [mm]	modules [N/mm2]	gam [kN/m]
1	2211.87	607.50	17378600.	0.0	182609	32.39
	6270.0	1078.98	398580.9	1347.3	70234	

Design forces and moments
(C/E = characteristic plastic/elastic, D=plast.Design, F=elast. Design)

	N[kN]	Vy[kN]	Vz[kN]	Mt[kNm]	My[kNm]	Mz[kNm]	y[mm]	z[mm]	BUCK
C	65172.9	14118.33	35274.05	7570.99	52373.81	8587.01	6.2	1242.	c c
C	-4614.6				52679.42	0.00	0.0	1375.	COMB
C	-10275.4				0.00	8490.79	0.0	0.0	COMB
C	-85723.6	14118.33	35274.05	7570.99	-56893.9	-8458.71	-6.2	1731.	
C	-15936.1				-67961.5	0.00	0.0	1375.	COMB
C	-10275.4				0.00	-8490.79	0.0	0.0	COMB
E	76817.5	9399.84	19629.12	4463.77	45186.18	3296.90	0.0	1375.	
E	-76817.5	9399.84	19629.12	4463.77	-45186.2	-3296.90	0.0	1375.	
D	56672.1	12276.81	28379.74	5237.27	45542.45	6820.69	4.8	1242.	

SOFiSTiK AG - www.sofistik.de

Composite bridge 38+50+38, b=14.25m, 2x2HL1100R HISTAR460 , slab 0.30m C30/37

Design forces and moments
(C/E = characteristic plastic/elastic, D=plast.Design, F=elast. Design)

	N[kN]	Vy[kN]	Vz[kN]	Mt[kNm]	My[kNm]	Mz[kNm]	y[mm]	z[mm]	BUCK
D	-4012.7				45808.19	0.00	0.0	1375.	COMB
D	-6850.3				0.00	6771.39	0.0	0.0	COMB
D	-70372.6	12276.81	28379.74	5237.27	-48130.3	-6754.95	-4.8	1649.	
D	-9687.8				-55996.2	0.00	0.0	1375.	COMB
D	-6850.3				0.00	-6771.39	0.0	0.0	COMB
F	66797.9	8173.78	17068.80	2975.84	39292.33	2866.87	0.0	1375.	
F	-66797.9	8173.78	17068.80	2975.84	-39292.3	-2866.87	0.0	1375.	

Additional Design Data

M	periphery-O/-I [m2/m]	[m2/m]	deff [mm]	t-min [mm]	t-max [mm]	SMP [o/o]	thet-p [tm2/m]	thet-y [tm2/m]	thet-z [tm2/m]	thet-yz [tm2/m]
	9.086		50.5	32.0	583.5	0.0	1.917	1.885	0.031	
1	7.915		49.1	45.0	52.0	0.0	1.247	1.216	0.031	
25	1.167		1174.0			0.0	0.049	0.049		
**	0.004		32.0			0.0	0.000		0.000	

Cross section No. 367.5 = CS 30 - in-situ conc:C3

Cross section No. 368 - VFT (353)

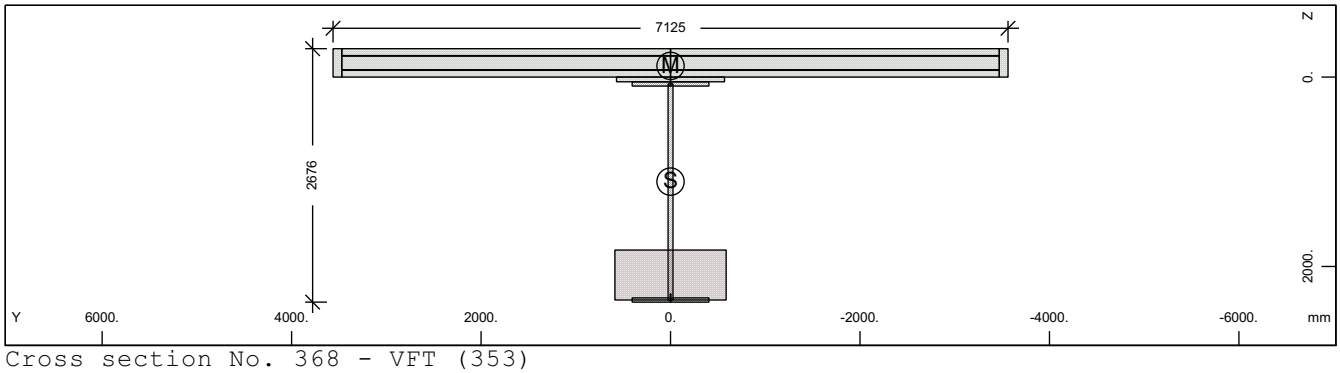

Cross section No. 368 - VFT (353)

Static properties of cross section

Mat NoR	A[cm2] It[cm4]	Ay/Az/Ayz [cm2]	Iy/Iz/Iyz [cm4]	ys/zs [mm]	y/z-sc [mm]	modules [N/mm2]	gam [kN/m]
1	2645.22	362.56	24543171.	0.0	0.0	210000	85.37
	6270.0	784.35	17062932.	1103.6	-118.2	80769	

Additional static properties of cross section

Alfa-T [1/°K]	ymin ymax [mm]	zmin zmax [mm]	hymin hzmin [mm]	AK AB [cm2]	MB	Tau-T Tau-B [1/m3]	Tau-Vy Tau-Vz [1/m2]
1.2E-05	-3562.5	-1403.6		4.167E+03		4.089E+00	3.361E+01
	3562.5	1272.5		2.813E+04		1.255E+02	1.789E+01

Section values for warping

Wmin[cm2]	Wmax[cm2]	CM[cm6]	CMS[cm4]	ASwyy[cm6]	ASwzz[cm6]	ry[mm]	rz[mm]
-10010.62	10010.62	1.335E+10	2907953.8	294.40	423.46	0.0	1586.2

Partial cross sections

Mat NoR	A[cm2] It[cm4]	Ay/Az/Ayz [cm2]	Iy/Iz/Iyz [cm4]	ys/zs [mm]	modules [N/mm2]	gam [kN/m]
1	1915.17	0.12	14626639.	0.0	210000	15.03
	15612.1	510.90	398580.9	1213.0	80769	
25	6188.12		1432710.5	0.0	10667	15.47
	28429786.	42.39	0.0	2090.0	4444	
210	0.64	0.00	0.0	0.0	200000	0.00
	2.2	0.00	0.0	2303.6	76923	
31	21945.00	17660.24	170028.4	0.0	0	54.86
	6417251.4	12373.00	904880243.	-145.5	0	

SOFiSTiK AG - www.sofistik.de

Composite bridge 38+50+38, b=14.25m, 2x2HL1100R HISTAR460 , slab 0.30m C30/37

300	435.87	380.56	24517.8	0.0	200000	0.00
	14.3	284.14	17497565.	-150.0	76923	

Design values of cross section

Mat NoR	A[cm2] It[cm4]	Ay/Az/Ayz [cm2]	Iy/Iz/Iyz [cm4]	ys/zs [mm]	modules [N/mm2]	gam [kN/m]
1	2571.88	362.56	23792184.	0.0	182609	85.37
	6270.0	783.30	17062931.	1075.5	70234	

Design forces and moments
(C/E = characteristic plastic/elastic, D=plast.Design, F=elast. Design)

	N[kN]	Vy[kN]	Vz[kN]	Mt[kNm]	My[kNm]	Mz[kNm]	y[mm]	z[mm]	BUCK
C	85984.0	62910.12	62414.72	105501.7	89767.09	103294.2	26.2	-74.3	c c
C	-83783.5				160314.5	0.00	0.0	1104.	COMB
C	-42199.7				0.00	103357.0	0.0	0.0	COMB
C	-159322.	62910.12	62414.72	105501.7	-96389.8	-102808.	-26.2	1121.	
C	-615.9				-96395.2	0.00	0.0	1104.	COMB
C	-42199.7				0.00	-103357.	0.0	0.0	COMB
E	88614.8	8589.00	16134.79	4035.58	64613.10	25813.28	0.0	1104.	
E	-88614.8	8589.00	16134.79	4035.58	-64613.1	-25813.3	0.0	1104.	
D	74768.7	47357.66	46894.65	70538.95	76873.77	77651.84	20.0	-41.3	
D	-59497.4				122719.1	0.00	0.0	1104.	COMB
D	-28133.1				0.00	77685.61	0.0	0.0	COMB
D	-123661.	47357.66	46894.64	70538.93	-79934.0	-77404.2	-20.0	997.1	
D	3231.1				-80106.3	0.00	0.0	1104.	COMB
D	-28133.1				0.00	-77685.6	0.0	0.0	COMB
F	77056.3	7468.70	14030.26	2690.39	56185.30	22446.33	0.0	1104.	
F	-77056.3	7468.70	14030.26	2690.39	-56185.3	-22446.3	0.0	1104.	

Additional Design Data

M	periphery-O/-I [m2/m]	[m2/m]	deff [mm]	t-min [mm]	t-max [mm]	SMP [o/o]	thet-p [tm2/m]	thet-y [tm2/m]	thet-z [tm2/m]	thet-yz [tm2/m]
	53.153		10.0	3.1	527.1	0.0	30.803	8.150	22.653	
1	7.802		49.1	45.0	52.0	0.0	1.179	1.148	0.031	
25	1.054		1174.0			0.0	0.036	0.036		
**	0.004		32.0			0.0	0.000		0.000	
31	16.530		265.5	50.0	300.0	0.0	22.626	0.004	22.622	
**	27.763		3.1	3.1	3.1	0.0	0.000	0.000	0.000	

Cross section No. 368.1 = CS 1 - steel alone

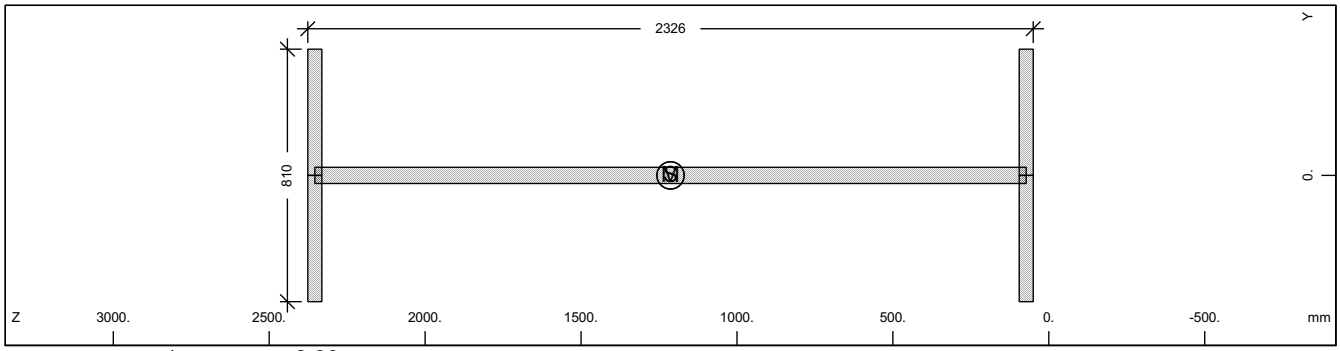

Cross section No. 368

Static properties of cross section

Mat NoR	A[cm2] It[cm4]	Ay/Az/Ayz [cm2]	Iy/Iz/Iyz [cm4]	ys/zs [mm]	modules [N/mm2]	gam [kN/m]
1	1915.17	607.50	14626639.	0.0	210000	15.03
	6270.0	1125.96	398580.9	1213.0	80769	

SOFiSTiK AG - www.sofistik.de

Composite bridge 38+50+38, b=14.25m, 2x2HL1100R HISTAR460 , slab 0.30m C30/37

Additional static properties of cross section

Alfa-T	ymin ymax	zmin zmax	hymin hzmin	AK AB	MB	Tau-T Tau-B	Tau-Vy Tau-Vz
[1/°K]	[mm]	[mm]	[mm]	[cm2]		[1/m3]	[1/m2]
1.2E-05	-405.0	-1163.0		1.155E+03		3.331E+02	2.058E+01
	405.0	1163.0				1.255E+02	9.913E+00

Section values for warping

Wmin[cm2]	Wmax[cm2]	CM[cm6]	CMS[cm4]	ASwyy[cm6]	ASwzz[cm6]	ry[mm]	rz[mm]
-4619.22	4619.225184942411.	7902669.2		-2.16	-79.10	0.0	0.0

Design values of cross section

Mat NoR	A[cm2] It[cm4]	Ay/Az/Ayz [cm2]	Iy/Iz/Iyz [cm4]	ys/zs [mm]	modules [N/mm2]	gam [kN/m]
1	1915.17	607.50	14626639.	0.0	182609	15.03
	6270.0	1125.96	398580.9	1213.0	70234	

Design forces and moments
(C/E = characteristic plastic/elastic, D=plast.Design, F=elast. Design)

	N[kN]	Vy[kN]	Vz[kN]	Mt[kNm]	My[kNm]	Mz[kNm]	y[mm]	z[mm]	BUCK
C	64158.2	14099.76	22942.00	913.74	50514.73	5461.93	0.0	1213.	c c
C	0.0				0.00	0.00	0.0	0.0	COMB
E	64158.2	9399.84	19511.42	580.69	42130.00	3296.90	0.0	1213.	
D	55789.8	12260.66	19949.57	794.55	43925.85	4749.51	0.0	1213.	
D	0.0				0.00	0.00	0.0	0.0	COMB
F	55789.7	8173.78	16966.45	504.95	36634.78	2866.87	0.0	1213.	

Additional Design Data

M	periphery-O/-I [m2/m]	[m2/m]	deff [mm]	t-min [mm]	t-max [mm]	SMP [o/o]	thet-p [tm2/m]	thet-y [tm2/m]	thet-z [tm2/m]	thet-yz [tm2/m]
	7.802		49.1	45.0	52.0	0.0	1.179	1.148	0.031	

Cross section No. 368.2 = CS 10 - prefab. slab C1

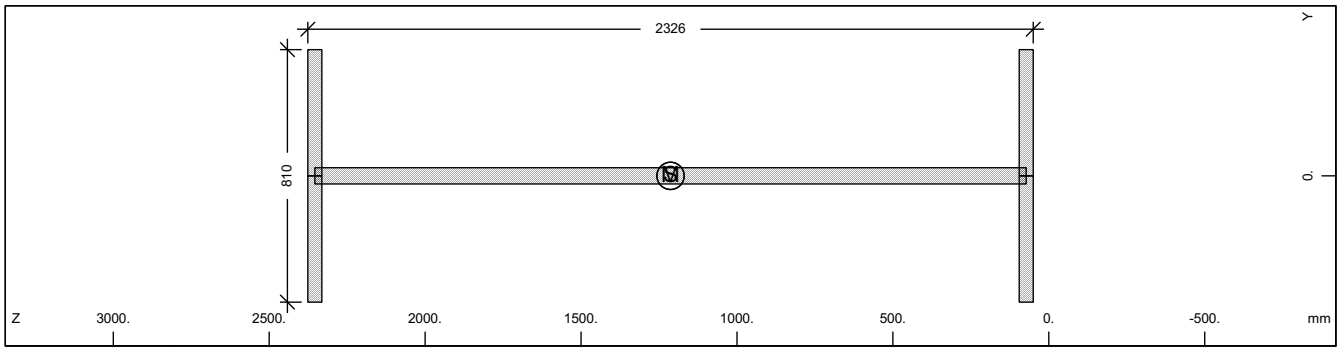

Cross section No. 368

Static properties of cross section

Mat NoR	A[cm2] It[cm4]	Ay/Az/Ayz [cm2]	Iy/Iz/Iyz [cm4]	ys/zs [mm]	modules [N/mm2]	gam [kN/m]
1	1915.17	607.50	14626639.	0.0	210000	15.03
	6270.0	1125.96	398580.9	1213.0	80769	

Additional static properties of cross section

Alfa-T	ymin ymax	zmin zmax	hymin hzmin	AK AB	MB	Tau-T Tau-B	Tau-Vy Tau-Vz
[1/°K]	[mm]	[mm]	[mm]	[cm2]		[1/m3]	[1/m2]
1.2E-05	-405.0	-1163.0		1.155E+03		3.331E+02	2.058E+01
	405.0	1163.0				1.255E+02	9.913E+00

Section values for warping

Wmin[cm2]	Wmax[cm2]	CM[cm6]	CMS[cm4]	ASwyy[cm6]	ASwzz[cm6]	ry[mm]	rz[mm]
-4619.22	4619.225184942411.	7902669.2		-2.16	-79.10	0.0	0.0

SOFiSTiK AG - www.sofistik.de

Composite bridge 38+50+38, b=14.25m, 2x2HL1100R HISTAR460 , slab 0.30m C30/37

Design values of cross section

Mat NoR	A[cm2] It[cm4]	Ay/Az/Ayz [cm2]	Iy/Iz/Iyz [cm4]	ys/zs [mm]	modules [N/mm2]	gam [kN/m]
1	1915.17	607.50	14626639.	0.0	182609	15.03
	6270.0	1125.96	398580.9	1213.0	70234	

Design forces and moments
(C/E = characteristic plastic/elastic, D=plast.Design, F=elast. Design)

	N[kN]	Vy[kN]	Vz[kN]	Mt[kNm]	My[kNm]	Mz[kNm]	y[mm]	z[mm]	BUCK
C	64158.2	14099.76	22942.00	913.74	50514.73	5461.93	0.0	1213.	c c
C	0.0				0.00	0.00	0.0	0.0	COMB
E	64158.2	9399.84	19511.42	580.69	42130.00	3296.90	0.0	1213.	
D	55789.8	12260.66	19949.57	794.55	43925.85	4749.51	0.0	1213.	
D	0.0				0.00	0.00	0.0	0.0	COMB
F	55789.7	8173.78	16966.45	504.95	36634.78	2866.87	0.0	1213.	

Additional Design Data

M	periphery-O/-I [m2/m] [m2/m]	deff [mm]	t-min [mm]	t-max [mm]	SMP [o/o]	thet-p [tm2/m]	thet-y [tm2/m]	thet-z [tm2/m]	thet-yz [tm2/m]
	7.802	49.1	45.0	52.0	0.0	1.179	1.148	0.031	

Cross section No. 368.3 = CS 20 - in-situ conc:C2

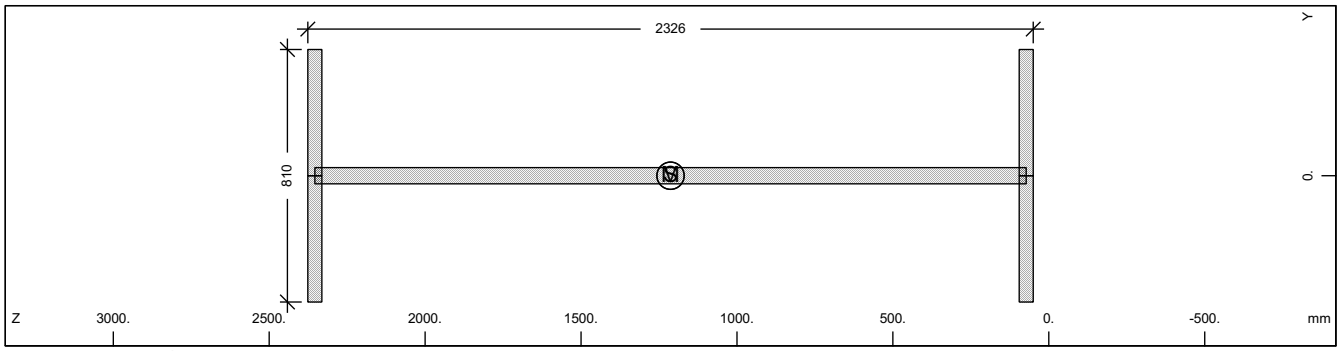

Cross section No. 368

Static properties of cross section

Mat NoR	A[cm2] It[cm4]	Ay/Az/Ayz [cm2]	Iy/Iz/Iyz [cm4]	ys/zs [mm]	modules [N/mm2]	gam [kN/m]
1	1915.17	607.50	14626639.	0.0	210000	15.03
	6270.0	1125.96	398580.9	1213.0	80769	

Additional static properties of cross section

Alfa-T [1/°K]	ymin ymax [mm]	zmin zmax [mm]	hymin hzmin [mm]	AK AB [cm2]	MB	Tau-T Tau-B [1/m3]	Tau-Vy Tau-Vz [1/m2]
1.2E-05	-405.0	-1163.0		1.155E+03		3.331E+02	2.058E+01
	405.0	1163.0				1.255E+02	9.913E+00

Section values for warping

Wmin[cm2]	Wmax[cm2]	CM[cm6]	CMS[cm4]	ASwyy[cm6]	ASwzz[cm6]	ry[mm]	rz[mm]
-4619.22	4619.225184942411.	7902669.2		-2.16	-79.10	0.0	0.0

Design values of cross section

Mat NoR	A[cm2] It[cm4]	Ay/Az/Ayz [cm2]	Iy/Iz/Iyz [cm4]	ys/zs [mm]	modules [N/mm2]	gam [kN/m]
1	1915.17	607.50	14626639.	0.0	182609	15.03
	6270.0	1125.96	398580.9	1213.0	70234	

Design forces and moments
(C/E = characteristic plastic/elastic, D=plast.Design, F=elast. Design)

	N[kN]	Vy[kN]	Vz[kN]	Mt[kNm]	My[kNm]	Mz[kNm]	y[mm]	z[mm]	BUCK
C	64158.2	14099.76	22942.00	913.74	50514.73	5461.93	0.0	1213.	c c
C	0.0				0.00	0.00	0.0	0.0	COMB
E	64158.2	9399.84	19511.42	580.69	42130.00	3296.90	0.0	1213.	

SOFiSTiK AG - www.sofistik.de

Composite bridge 38+50+38, b=14.25m, 2x2HL1100R HISTAR460 , slab 0.30m C30/37

Design forces and moments
(C/E = characteristic plastic/elastic, D=plast.Design, F=elast. Design)

	N[kN]	Vy[kN]	Vz[kN]	Mt[kNm]	My[kNm]	Mz[kNm]	y[mm]	z[mm]	BUCK
D	55789.8	12260.66	19949.57	794.55	43925.85	4749.51	0.0	1213.	
D	0.0				0.00	0.00	0.0	0.0	COMB
F	55789.7	8173.78	16966.45	504.95	36634.78	2866.87	0.0	1213.	

Additional Design Data

M	periphery-O/-I [m2/m]	[m2/m]	deff [mm]	t-min [mm]	t-max [mm]	SMP [o/o]	thet-p [tm2/m]	thet-y [tm2/m]	thet-z [tm2/m]	thet-yz [tm2/m]
	7.802		49.1	45.0	52.0	0.0	1.179	1.148	0.031	

Cross section No. 368.4 = CS 21 - reinf active:C2

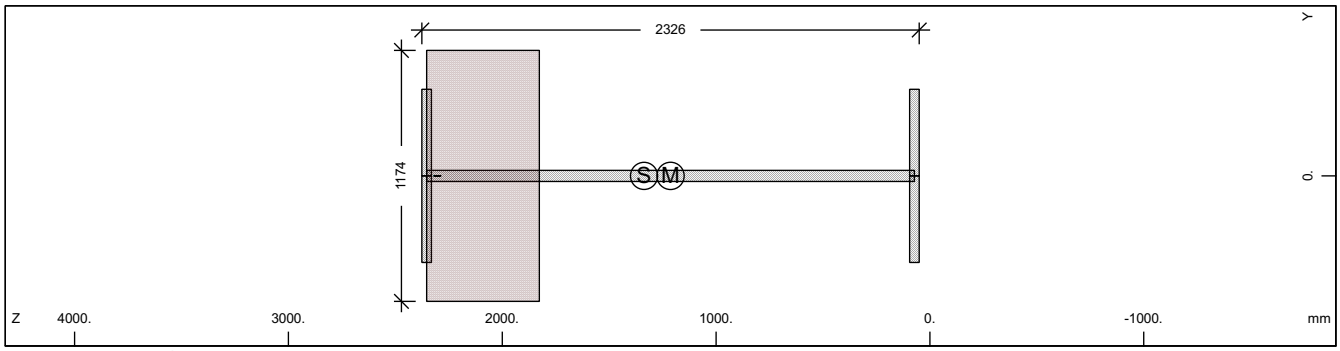

Cross section No. 368

Static properties of cross section

Mat NoR	A[cm2] It[cm4]	Ay/Az/Ayz [cm2]	Iy/Iz/Iyz [cm4]	ys/zs [mm]	modules [N/mm2]	gam [kN/m]
1	2230.10	607.50	16781816.	0.0	210000	30.50
	6270.0	1062.52	398580.9	1337.0	80769	

Additional static properties of cross section

Alfa-T [1/°K]	ymin ymax [mm]	zmin zmax [mm]	hymin hzmin [mm]	AK AB [cm2]	MB	Tau-T Tau-B [1/m3]	Tau-Vy Tau-Vz [1/m2]
1.2E-05	-587.0	-1287.0		4.167E+03		4.089E+00	2.058E+01
	587.0	1039.1		6.188E+03		1.255E+02	1.005E+01

Section values for warping

Wmin[cm2]	Wmax[cm2]	CM[cm6]	CMS[cm4]	ASwyy[cm6]	ASwzz[cm6]	ry[mm]	rz[mm]
-4619.22	4619.225	184941946.	7902669.2	2.71	114.07	0.0	8.8

Partial cross sections

Mat NoR	A[cm2] It[cm4]	Ay/Az/Ayz [cm2]	Iy/Iz/Iyz [cm4]	ys/zs [mm]	modules [N/mm2]	gam [kN/m]
1	1915.17	607.50	14626639.	0.0	210000	15.03
	15612.1	1057.41	398580.9	1213.0	80769	
25	6188.12		1432710.5	0.0	10667	15.47
	28429786.	92.95	0.0	2090.0	4444	
210	0.64	0.00	0.0	0.0	200000	0.00
	2.2	0.00	0.0	2303.6	76923	

Design values of cross section

Mat NoR	A[cm2] It[cm4]	Ay/Az/Ayz [cm2]	Iy/Iz/Iyz [cm4]	ys/zs [mm]	modules [N/mm2]	gam [kN/m]
1	2156.76	607.50	16334739.	0.0	182609	30.50
	6270.0	1061.33	398580.9	1311.3	70234	

Design forces and moments
(C/E = characteristic plastic/elastic, D=plast.Design, F=elast. Design)

	N[kN]	Vy[kN]	Vz[kN]	Mt[kNm]	My[kNm]	Mz[kNm]	y[mm]	z[mm]	BUCK
C	64190.4	14118.33	33614.28	6914.93	50549.78	8266.96	5.8	1214.	c c
C	-4284.8				50813.26	0.00	0.0	1337.	COMB

SOFiSTiK AG - www.sofistik.de

Composite bridge 38+50+38, b=14.25m, 2x2HL1100R HISTAR460 , slab 0.30m C30/37

Design forces and moments
(C/E = characteristic plastic/elastic, D=plast.Design, F=elast. Design)

	N[kN]	Vy[kN]	Vz[kN]	Mt[kNm]	My[kNm]	Mz[kNm]	y[mm]	z[mm]	BUCK
C	-9282.2				0.00	8186.51	0.0	0.0	COMB
C	-82754.7	14118.33	33614.28	6914.93	-54404.9	-8159.69	-5.8	1671.	
C	-14279.6				-64793.9	0.00	0.0	1337.	COMB
C	-9282.2				0.00	-8186.51	0.0	0.0	COMB
E	74708.4	9399.84	19254.30	4035.55	43683.78	3296.90	0.0	1337.	
E	-74708.4	9399.84	19254.30	4035.55	-43683.8	-3296.90	0.0	1337.	
D	55817.7	12276.81	27158.13	4796.91	43956.33	6607.16	4.4	1214.	
D	-3725.9				44185.44	0.00	0.0	1337.	COMB
D	-6188.1				0.00	6565.94	0.0	0.0	COMB
D	-68193.9	12276.81	27158.13	4796.91	-46157.8	-6552.21	-4.4	1592.	
D	-8650.4				-53505.9	0.00	0.0	1337.	COMB
D	-6188.1				0.00	-6565.94	0.0	0.0	COMB
F	64963.8	8173.78	16742.87	2690.37	37985.89	2866.87	0.0	1337.	
F	-64963.8	8173.78	16742.87	2690.37	-37985.9	-2866.87	0.0	1337.	

Additional Design Data

M	periphery-O/-I [m2/m]	[m2/m]	deff [mm]	t-min [mm]	t-max [mm]	SMP [o/o]	thet-p [tm2/m]	thet-y [tm2/m]	thet-z [tm2/m]	thet-yz [tm2/m]
	8.860		50.3	32.0	527.1	0.0	1.802	1.770	0.031	
1	7.802		49.1	45.0	52.0	0.0	1.179	1.148	0.031	
25	1.054		1174.0			0.0	0.036	0.036		
**	0.004		32.0			0.0	0.000		0.000	

Cross section No. 368.5 = CS 30 - in-situ conc:C3

Cross section No. 369 - VFT (353)

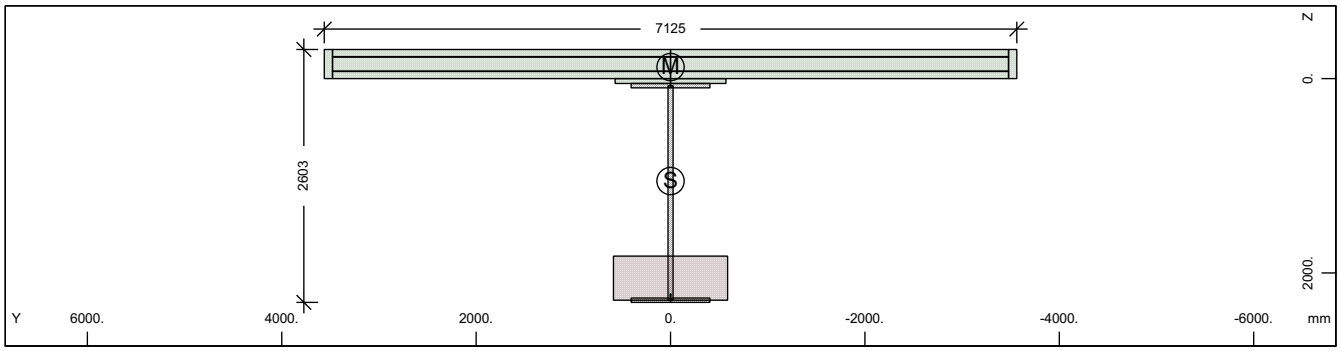

Cross section No. 369 - VFT (353)

Static properties of cross section

Mat NoR	A[cm2] It[cm4]	Ay/Az/Ayz [cm2]	Iy/Iz/Iyz [cm4]	ys/zs [mm]	y/z-sc [mm]	modules [N/mm2]	gam [kN/m]
1	2564.32	363.23	22640592.	0.0	0.0	210000	82.92
	6270.0	751.88	17171340.	1054.0	-119.2	80769	

Additional static properties of cross section

Alfa-T [1/°K]	ymin ymax [mm]	zmin zmax [mm]	hymin hzmin [mm]	AK AB [cm2]	MB	Tau-T Tau-B [1/m3]	Tau-Vy Tau-Vz [1/m2]
1.2E-05	-3562.5	-1354.0		3.592E+03		4.742E+00	3.354E+01
	3562.5	1248.8		2.727E+04		1.255E+02	1.871E+01

Section values for warping

Wmin[cm2]	Wmax[cm2]	CM[cm6]	CMS[cm4]	ASwyy[cm6]	ASwzz[cm6]	ry[mm]	rz[mm]
-9718.13	9718.13	1.265E+10	2627144.6	447.76	590.37	0.0	1479.3

SOFiSTiK AG - www.sofistik.de

Composite bridge 38+50+38, b=14.25m, 2x2HL1100R HISTAR460 , slab 0.30m C30/37

Partial cross sections

Mat NoR	A[cm2] It[cm4]	Ay/Az/Ayz [cm2]	Iy/Iz/Iyz [cm4]	ys/zs [mm]	modules [N/mm2]	gam [kN/m]
1	1877.07	0.12	13547310.	0.0	210000	14.73
	15268.7	478.29	398580.9	1176.4	80769	
25	5327.91		914436.3	0.0	10667	13.32
	24477776.	30.61	0.0	2053.4	4444	
210	0.64	0.00	0.0	0.0	200000	0.00
	2.2	0.00	0.0	2230.3	76923	
31	21945.00	17503.05	170028.4	0.0	0	54.86
	6417251.4	12325.01	904880243.	-145.5	0	
300	436.82	381.27	24570.9	0.0	200000	0.00
	14.4	284.96	17611392.	-150.0	76923	

Design values of cross section

Mat NoR	A[cm2] It[cm4]	Ay/Az/Ayz [cm2]	Iy/Iz/Iyz [cm4]	ys/zs [mm]	modules [N/mm2]	gam [kN/m]
1	2501.18	363.23	21983157.	0.0	182609	82.92
	6270.0	750.98	17171340.	1028.8	70234	

Design forces and moments
(C/E = characteristic plastic/elastic, D=plast.Design, F=elast. Design)

	N[kN]	Vy[kN]	Vz[kN]	Mt[kNm]	My[kNm]	Mz[kNm]	y[mm]	z[mm]	BUCK
C	84754.8	62937.35	60258.45	104649.4	85821.35	103019.0	26.6	-74.5	c c
C	-83379.9				153751.5	0.00	0.0	1054.	COMB
C	-40909.4				0.00	103125.5	0.0	0.0	COMB
C	-156413.	62937.35	60258.45	104649.4	-90722.2	-102593.	-26.6	1009.	
C	1561.1				-90757.2	0.00	0.0	1054.	COMB
C	-40909.4				0.00	-103125.	0.0	0.0	COMB
E	85904.8	8606.29	15427.54	3479.27	60735.39	25921.20	0.0	1054.	
E	-85904.8	8606.29	15427.54	3479.27	-60735.4	-25921.2	0.0	1054.	
D	73699.8	47381.33	45307.62	69966.88	73476.11	77496.69	19.5	-49.4	
D	-59146.4				117674.4	0.00	0.0	1054.	COMB
D	-27272.9				0.00	77561.16	0.0	0.0	COMB
D	-121472.	47381.33	45307.62	69966.87	-75328.9	-77288.3	-19.5	902.2	
D	4600.6				-75678.2	0.00	0.0	1054.	COMB
D	-27272.9				0.00	-77561.2	0.0	0.0	COMB
F	74699.8	7483.73	13415.25	2319.51	52813.39	22540.17	0.0	1054.	
F	-74699.8	7483.73	13415.25	2319.51	-52813.4	-22540.2	0.0	1054.	

Additional Design Data

M	periphery-O/-I [m2/m]	[m2/m]	deff [mm]	t-min [mm]	t-max [mm]	SMP [o/o]	thet-p [tm2/m]	thet-y [tm2/m]	thet-z [tm2/m]	thet-yz [tm2/m]
	52.920		9.7	3.1	453.8	0.0	29.891	7.237	22.653	
1	7.656		49.0	45.0	52.0	0.0	1.095	1.063	0.031	
25	0.908		1174.0			0.0	0.023	0.023		
**	0.004		32.0			0.0	0.000		0.000	
31	16.530		265.5	50.0	300.0	0.0	22.626	0.004	22.622	
**	27.823		3.1	3.1	3.1	0.0	0.000	0.000	0.000	

SOFiSTiK AG - www.sofistik.de

Composite bridge 38+50+38, b=14.25m, 2x2HL1100R HISTAR460 , slab 0.30m C30/37

Cross section No. 369.1 = CS 1 - steel alone

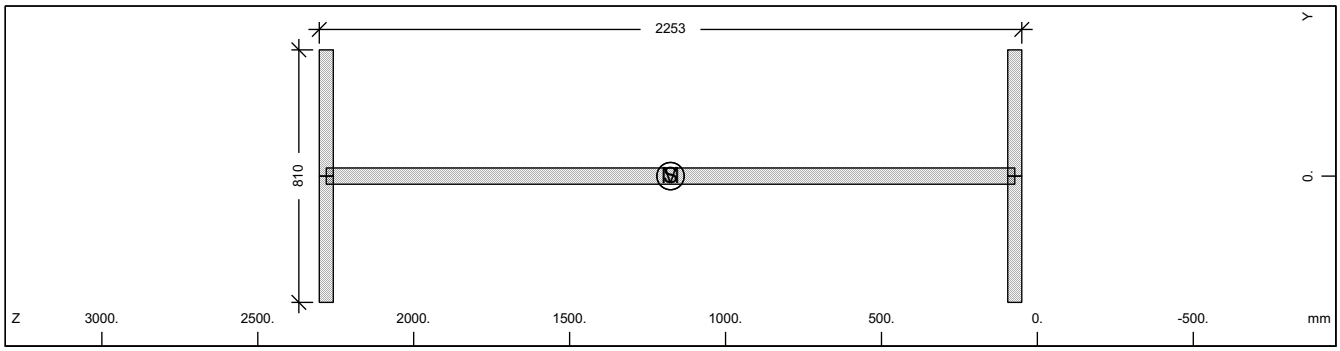

Cross section No. 369

Static properties of cross section

Mat NoR	A[cm2] It[cm4]	Ay/Az/Ayz [cm2]	Iy/Iz/Iyz [cm4]	ys/zs [mm]	modules [N/mm2]	gam [kN/m]
1	1877.07	607.50	13547310.	0.0	210000	14.73
	6270.0	1089.16	398580.9	1176.4	80769	

Additional static properties of cross section

Alfa-T [1/°K]	ymin ymax [mm]	zmin zmax [mm]	hymin hzmin [mm]	AK AB [cm2]	MB	Tau-T Tau-B [1/m3]	Tau-Vy Tau-Vz [1/m2]
1.2E-05	-405.0	-1126.4		1.129E+03		3.406E+02	2.058E+01
	405.0	1126.4				1.255E+02	1.021E+01

Section values for warping

Wmin[cm2]	Wmax[cm2]	CM[cm6]	CMS[cm4]	ASwyy[cm6]	ASwzz[cm6]	ry[mm]	rz[mm]
-4470.85	4470.854857199286.		7403137.6	-6.55	-222.50	0.0	0.0

Design values of cross section

Mat NoR	A[cm2] It[cm4]	Ay/Az/Ayz [cm2]	Iy/Iz/Iyz [cm4]	ys/zs [mm]	modules [N/mm2]	gam [kN/m]
1	1877.07	607.50	13547310.	0.0	182609	14.73
	6270.0	1089.16	398580.9	1176.4	70234	

Design forces and moments
(C/E = characteristic plastic/elastic, D=plast.Design, F=elast. Design)

	N[kN]	Vy[kN]	Vz[kN]	Mt[kNm]	My[kNm]	Mz[kNm]	y[mm]	z[mm]	BUCK
C	62881.8	14099.76	22205.08	894.58	48187.63	5445.34	0.0	1176.	c c
C	0.0				0.00	0.00	0.0	0.0	COMB
E	62881.8	9399.84	18944.36	567.91	40290.29	3296.90	0.0	1176.	
D	54679.8	12260.66	19308.76	777.89	41902.29	4735.08	0.0	1176.	
D	0.0				0.00	0.00	0.0	0.0	COMB
F	54679.8	8173.78	16473.36	493.84	35035.03	2866.87	0.0	1176.	

Additional Design Data

M	periphery-O/-I [m2/m] [m2/m]	deff [mm]	t-min [mm]	t-max [mm]	SMP [o/o]	thet-p [tm2/m]	thet-y [tm2/m]	thet-z [tm2/m]	thet-yz [tm2/m]
	7.656	49.0	45.0	52.0	0.0	1.095	1.063	0.031	

SOFiSTiK AG - www.sofistik.de

Composite bridge 38+50+38, b=14.25m, 2x2HL1100R HISTAR460 , slab 0.30m C30/37

Cross section No. 369.2 = CS 10 - prefab. slab C1

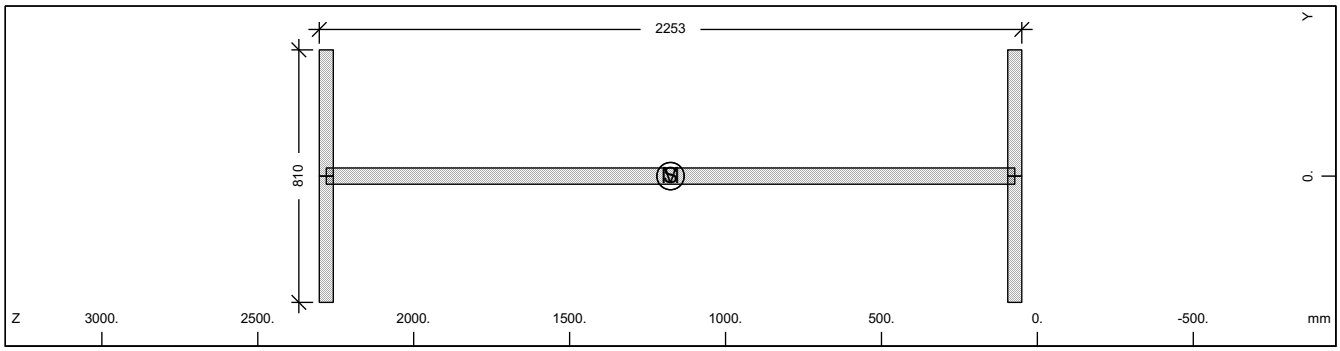

Cross section No. 369

Static properties of cross section

Mat NoR	A[cm2] It[cm4]	Ay/Az/Ayz [cm2]	Iy/Iz/Iyz [cm4]	ys/zs [mm]	modules [N/mm2]	gam [kN/m]
1	1877.07	607.50	13547310.	0.0	210000	14.73
	6270.0	1089.16	398580.9	1176.4	80769	

Additional static properties of cross section

Alfa-T [1/°K]	ymin ymax [mm]	zmin zmax [mm]	hymin hzmin [mm]	AK AB [cm2]	MB	Tau-T Tau-B [1/m3]	Tau-Vy Tau-Vz [1/m2]
1.2E-05	-405.0	-1126.4		1.129E+03		3.406E+02	2.058E+01
	405.0	1126.4				1.255E+02	1.021E+01

Section values for warping

Wmin[cm2]	Wmax[cm2]	CM[cm6]	CMS[cm4]	ASwyy[cm6]	ASwzz[cm6]	ry[mm]	rz[mm]
-4470.85	4470.854857199286.		7403137.6	-6.55	-222.50	0.0	0.0

Design values of cross section

Mat NoR	A[cm2] It[cm4]	Ay/Az/Ayz [cm2]	Iy/Iz/Iyz [cm4]	ys/zs [mm]	modules [N/mm2]	gam [kN/m]
1	1877.07	607.50	13547310.	0.0	182609	14.73
	6270.0	1089.16	398580.9	1176.4	70234	

Design forces and moments
(C/E = characteristic plastic/elastic, D=plast.Design, F=elast. Design)

	N[kN]	Vy[kN]	Vz[kN]	Mt[kNm]	My[kNm]	Mz[kNm]	y[mm]	z[mm]	BUCK
C	62881.8	14099.76	22205.08	894.58	48187.63	5445.34	0.0	1176.	c c
C	0.0				0.00	0.00	0.0	0.0	COMB
E	62881.8	9399.84	18944.36	567.91	40290.29	3296.90	0.0	1176.	
D	54679.8	12260.66	19308.76	777.89	41902.29	4735.08	0.0	1176.	
D	0.0				0.00	0.00	0.0	0.0	COMB
F	54679.8	8173.78	16473.36	493.84	35035.03	2866.87	0.0	1176.	

Additional Design Data

M	periphery-O/-I [m2/m] [m2/m]	deff [mm]	t-min [mm]	t-max [mm]	SMP [o/o]	thet-p [tm2/m]	thet-y [tm2/m]	thet-z [tm2/m]	thet-yz [tm2/m]
	7.656	49.0	45.0	52.0	0.0	1.095	1.063	0.031	

SOFiSTiK AG - www.sofistik.de

Composite bridge 38+50+38, b=14.25m, 2x2HL1100R HISTAR460 , slab 0.30m C30/37

Cross section No. 369.3 = CS 20 - in-situ conc:C2

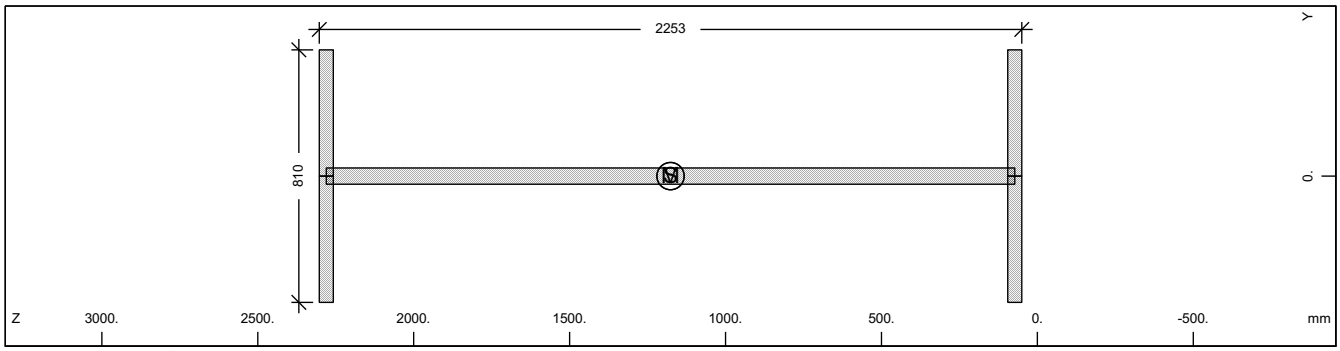

Cross section No. 369

Static properties of cross section

Mat NoR	A[cm2] It[cm4]	Ay/Az/Ayz [cm2]	Iy/Iz/Iyz [cm4]	ys/zs [mm]	modules [N/mm2]	gam [kN/m]
1	1877.07	607.50	13547310.	0.0	210000	14.73
	6270.0	1089.16	398580.9	1176.4	80769	

Additional static properties of cross section

Alfa-T [1/°K]	ymin ymax [mm]	zmin zmax [mm]	hymin hzmin [mm]	AK AB [cm2]	MB	Tau-T Tau-B [1/m3]	Tau-Vy Tau-Vz [1/m2]
1.2E-05	-405.0	-1126.4		1.129E+03		3.406E+02	2.058E+01
	405.0	1126.4				1.255E+02	1.021E+01

Section values for warping

Wmin[cm2]	Wmax[cm2]	CM[cm6]	CMS[cm4]	ASwyy[cm6]	ASwzz[cm6]	ry[mm]	rz[mm]
-4470.85	4470.854857199286.		7403137.6	-6.55	-222.50	0.0	0.0

Design values of cross section

Mat NoR	A[cm2] It[cm4]	Ay/Az/Ayz [cm2]	Iy/Iz/Iyz [cm4]	ys/zs [mm]	modules [N/mm2]	gam [kN/m]
1	1877.07	607.50	13547310.	0.0	182609	14.73
	6270.0	1089.16	398580.9	1176.4	70234	

Design forces and moments
(C/E = characteristic plastic/elastic, D=plast.Design, F=elast. Design)

	N[kN]	Vy[kN]	Vz[kN]	Mt[kNm]	My[kNm]	Mz[kNm]	y[mm]	z[mm]	BUCK
C	62881.8	14099.76	22205.08	894.58	48187.63	5445.34	0.0	1176.	c c
C	0.0				0.00	0.00	0.0	0.0	COMB
E	62881.8	9399.84	18944.36	567.91	40290.29	3296.90	0.0	1176.	
D	54679.8	12260.66	19308.76	777.89	41902.29	4735.08	0.0	1176.	
D	0.0				0.00	0.00	0.0	0.0	COMB
F	54679.8	8173.78	16473.36	493.84	35035.03	2866.87	0.0	1176.	

Additional Design Data

M	periphery-O/-I [m2/m] [m2/m]	deff [mm]	t-min [mm]	t-max [mm]	SMP [o/o]	thet-p [tm2/m]	thet-y [tm2/m]	thet-z [tm2/m]	thet-yz [tm2/m]
	7.656	49.0	45.0	52.0	0.0	1.095	1.063	0.031	

SOFiSTiK AG - www.sofistik.de

Composite bridge 38+50+38, b=14.25m, 2x2HL1100R HISTAR460 , slab 0.30m C30/37

Cross section No. 369.4 = CS 21 - reinf active:C2

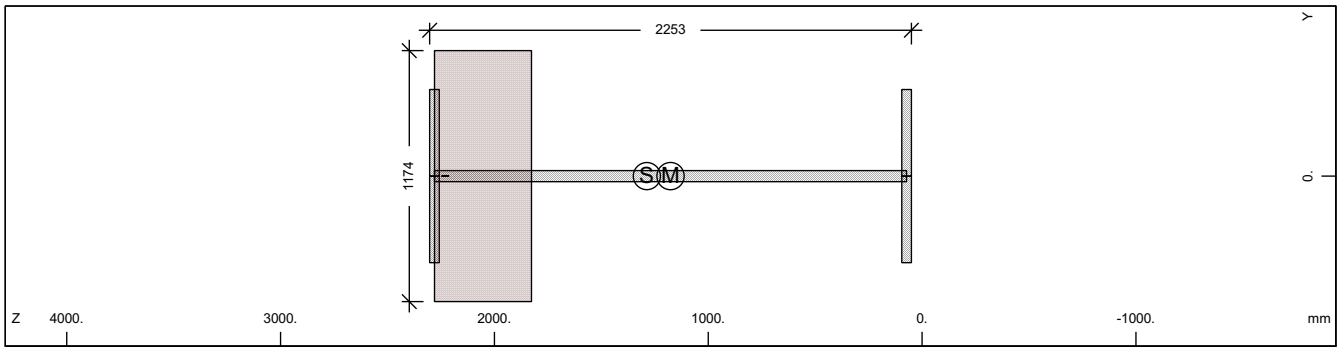

Cross section No. 369

Static properties of cross section

Mat NoR	A[cm2] It[cm4]	Ay/Az/Ayz [cm2]	Iy/Iz/Iyz [cm4]	ys/zs [mm]	modules [N/mm2]	gam [kN/m]
1	2148.31	607.50	15418379.	0.0	210000	28.05
	6270.0	1039.22	398580.9	1287.2	80769	

Additional static properties of cross section

Alfa-T [1/°K]	ymin ymax [mm]	zmin zmax [mm]	hymin hzmin [mm]	AK AB [cm2]	MB	Tau-T Tau-B [1/m3]	Tau-Vy Tau-Vz [1/m2]
1.2E-05	-587.0	-1237.2		3.592E+03		4.742E+00	2.058E+01
	587.0	1015.6		5.328E+03		1.255E+02	1.031E+01

Section values for warping

Wmin[cm2]	Wmax[cm2]	CM[cm6]	CMS[cm4]	ASwyy[cm6]	ASwzz[cm6]	ry[mm]	rz[mm]
-4470.85	4470.854857198820.		7403136.8	-4.12	-159.22	0.0	11.2

Partial cross sections

Mat NoR	A[cm2] It[cm4]	Ay/Az/Ayz [cm2]	Iy/Iz/Iyz [cm4]	ys/zs [mm]	modules [N/mm2]	gam [kN/m]
1	1877.07	607.50	13547310.	0.0	210000	14.73
	15268.7	1035.28	398580.9	1176.4	80769	
25	5327.91		914436.3	0.0	10667	13.32
	24477776.	71.55	0.0	2053.4	4444	
210	0.64	0.00	0.0	0.0	200000	0.00
	2.2	0.00	0.0	2230.3	76923	

Design values of cross section

Mat NoR	A[cm2] It[cm4]	Ay/Az/Ayz [cm2]	Iy/Iz/Iyz [cm4]	ys/zs [mm]	modules [N/mm2]	gam [kN/m]
1	2085.16	607.50	15025587.	0.0	182609	28.05
	6270.0	1038.30	398580.9	1264.0	70234	

Design forces and moments
(C/E = characteristic plastic/elastic, D=plast.Design, F=elast. Design)

	N[kN]	Vy[kN]	Vz[kN]	Mt[kNm]	My[kNm]	Mz[kNm]	y[mm]	z[mm]	BUCK
C	62914.0	14118.33	31458.01	6062.61	48221.50	7852.81	5.1	1177.	c c
C	-3827.3				48431.72	0.00	0.0	1287.	COMB
C	-7991.9				0.00	7791.21	0.0	0.0	COMB
C	-78897.7	14118.33	31458.01	6062.61	-51266.3	-7770.68	-5.1	1588.	
C	-12156.4				-60678.8	0.00	0.0	1287.	COMB
C	-7991.9				0.00	-7791.21	0.0	0.0	COMB
E	71968.2	9399.84	18764.98	3479.24	41749.12	3296.90	0.0	1287.	
E	-71968.2	9399.84	18764.98	3479.24	-41749.1	-3296.90	0.0	1287.	
D	54707.8	12276.81	25571.10	4224.81	41931.74	6330.59	3.9	1177.	
D	-3328.1				42114.54	0.00	0.0	1287.	COMB
D	-5327.9				0.00	6299.04	0.0	0.0	COMB
D	-65363.6	12276.81	25571.10	4224.81	-43665.1	-6288.53	-3.9	1515.	
D	-7327.7				-50279.3	0.00	0.0	1287.	COMB
D	-5327.9				0.00	-6299.04	0.0	0.0	COMB

SOFiSTiK AG - www.sofistik.de

Composite bridge 38+50+38, b=14.25m, 2x2HL1100R HISTAR460 , slab 0.30m C30/37

Design forces and moments
(C/E = characteristic plastic/elastic, D=plast.Design, F=elast. Design)

	N[kN]	Vy[kN]	Vz[kN]	Mt[kNm]	My[kNm]	Mz[kNm]	y[mm]	z[mm]	BUCK
F	62581.1	8173.78	16317.38	2319.49	36303.58	2866.87	0.0	1287.	
F	-62581.1	8173.78	16317.38	2319.49	-36303.6	-2866.87	0.0	1287.	

Additional Design Data

M	periphery-O/-I [m2/m]	[m2/m]	deff [mm]	t-min [mm]	t-max [mm]	SMP [o/o]	thet-p [tm2/m]	thet-y [tm2/m]	thet-z [tm2/m]	thet-yz [tm2/m]
	8.567		50.2	32.0	453.8	0.0	1.656	1.624	0.031	
1	7.656		49.0	45.0	52.0	0.0	1.095	1.063	0.031	
25	0.908		1174.0			0.0	0.023	0.023		
**	0.004		32.0			0.0	0.000		0.000	

Cross section No. 369.5 = CS 30 - in-situ conc:C3

Cross section No. 370 - VFT (353)

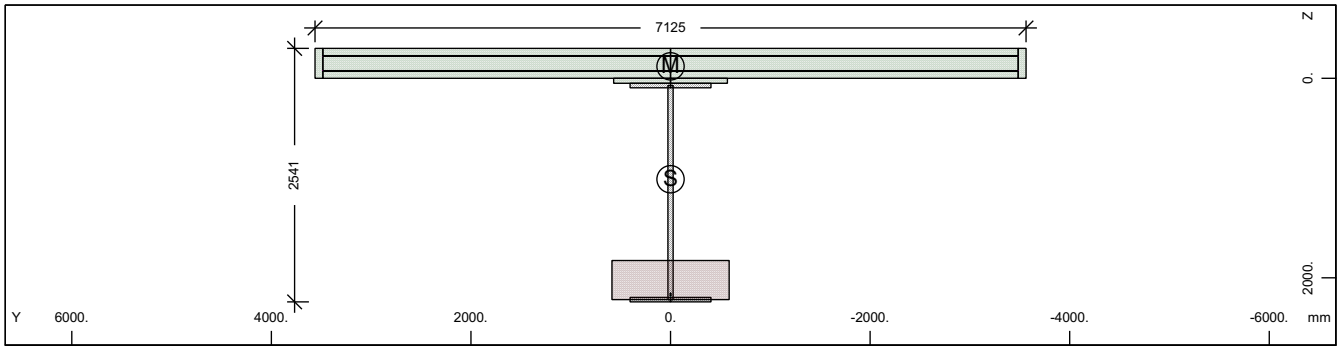

Cross section No. 370 - VFT (353)

Static properties of cross section

Mat NoR	A[cm2] It[cm4]	Ay/Az/Ayz [cm2]	Iy/Iz/Iyz [cm4]	ys/zs [mm]	y/z-sc [mm]	modules [N/mm2]	gam [kN/m]
1	2496.31	363.80	21086161.	0.0	0.0	210000	80.86
	6270.0	723.93	17262842.	1011.7	-120.1	80769	

Additional static properties of cross section

Alfa-T [1/°K]	ymin ymax [mm]	zmin zmax [mm]	hymin hzmin [mm]	AK AB [cm2]	MB	Tau-T Tau-B [1/m3]	Tau-Vy Tau-Vz [1/m2]
1.2E-05	-3562.5	-1311.7		3.109E+03		5.479E+00	3.349E+01
	3562.5	1229.5		2.655E+04		1.255E+02	1.946E+01

Section values for warping

Wmin[cm2]	Wmax[cm2]	CM[cm6]	CMS[cm4]	ASwyy[cm6]	ASwzz[cm6]	ry[mm]	rz[mm]
-9472.18	9472.18	1.207E+10	2406288.5	-121.46	-148.36	0.0	1386.2

Partial cross sections

Mat NoR	A[cm2] It[cm4]	Ay/Az/Ayz [cm2]	Iy/Iz/Iyz [cm4]	ys/zs [mm]	modules [N/mm2]	gam [kN/m]
1	1845.04	0.12	12678933.	0.0	210000	14.48
	14980.0	450.64	398580.9	1145.6	80769	
25	4604.72		590327.2	0.0	10667	11.51
	21155261.	21.97	0.0	2022.6	4444	
210	0.64	0.00	0.0	0.0	200000	0.00
	2.2	0.00	0.0	2168.7	76923	
31	21945.00	17372.27	170028.4	0.0	0	54.86
	6417251.4	12262.82	904880243.	-145.5	0	
300	437.61	381.87	24615.5	0.0	200000	0.00
	14.4	285.15	17707470.	-150.0	76923	

SOFiSTiK AG - www.sofistik.de

Composite bridge 38+50+38, b=14.25m, 2x2HL1100R HISTAR460 , slab 0.30m C30/37

Design values of cross section

Mat NoR	A[cm2] It[cm4]	Ay/Az/Ayz [cm2]	Iy/Iz/Iyz [cm4]	ys/zs [mm]	modules [N/mm2]	gam [kN/m]
1	2441.74	363.80	20509008.	0.0	182609	80.86
	6270.0	723.14	17262840.	989.1	70234	

Design forces and moments
(C/E = characteristic plastic/elastic, D=plast.Design, F=elast. Design)

	N[kN]	Vy[kN]	Vz[kN]	Mt[kNm]	My[kNm]	Mz[kNm]	y[mm]	z[mm]	BUCK
C	83721.3	62960.24	58445.65	103932.9	83246.07	102786.3	27.1	-83.6	c c
C	-83018.6				148218.8	0.00	0.0	1012.	COMB
C	-39824.6				0.00	102931.2	0.0	0.0	COMB
C	-153968.	62960.24	58445.65	103932.9	-85837.5	-102412.	-27.1	915.2	
C	3369.5				-86000.5	0.00	0.0	1012.	COMB
C	-39824.6				0.00	-102931.	0.0	0.0	COMB
E	83626.4	8620.83	14832.93	3011.57	57453.16	26012.11	0.0	1012.	
E	-83626.4	8620.83	14832.93	3011.57	-57453.2	-26012.1	0.0	1012.	
D	72801.1	47401.23	43973.38	69485.95	70675.38	77375.35	20.0	-56.2	
D	-58832.3				113428.5	0.00	0.0	1012.	COMB
D	-26549.7				0.00	77456.78	0.0	0.0	COMB
D	-119632.	47401.23	43973.38	69485.93	-71407.2	-77190.8	-20.0	822.6	
D	5732.9				-71949.6	0.00	0.0	1012.	COMB
D	-26549.7				0.00	-77456.8	0.0	0.0	COMB
F	72718.6	7496.37	12898.20	2007.71	49959.27	22619.23	0.0	1012.	
F	-72718.6	7496.37	12898.20	2007.71	-49959.3	-22619.2	0.0	1012.	

Additional Design Data

M	periphery-O/-I [m2/m]	[m2/m]	deff [mm]	t-min [mm]	t-max [mm]	SMP [o/o]	thet-p [tm2/m]	thet-y [tm2/m]	thet-z [tm2/m]	thet-yz [tm2/m]
	52.724		9.5	3.1	392.2	0.0	29.136	6.482	22.653	
1	7.532		49.0	45.0	52.0	0.0	1.027	0.995	0.031	
25	0.784		1174.0			0.0	0.015	0.015		
**	0.004		32.0			0.0	0.000		0.000	
31	16.530		265.5	50.0	300.0	0.0	22.626	0.004	22.622	
**	27.873		3.1	3.1	3.1	0.0	0.000	0.000	0.000	

Cross section No. 370.1 = CS 1 - steel alone

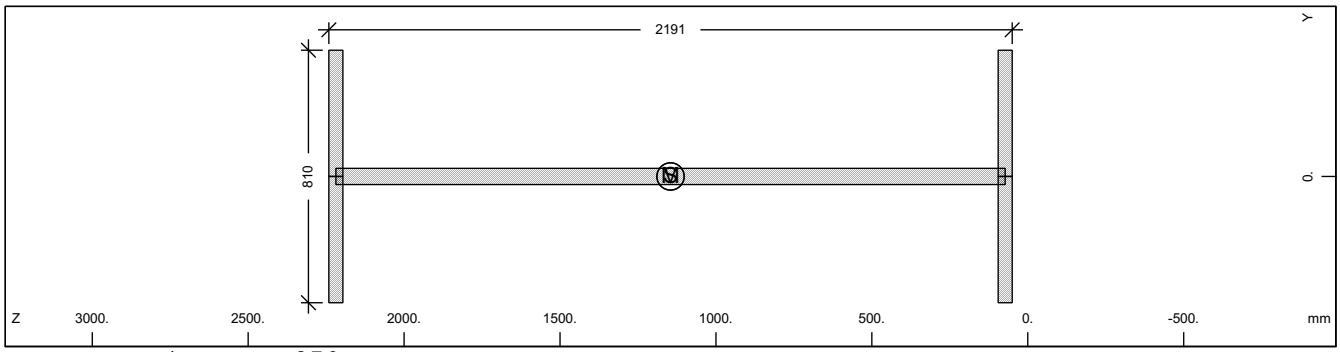

Cross section No. 370

Static properties of cross section

Mat NoR	A[cm2] It[cm4]	Ay/Az/Ayz [cm2]	Iy/Iz/Iyz [cm4]	ys/zs [mm]	modules [N/mm2]	gam [kN/m]
1	1845.04	607.50	12678933.	0.0	210000	14.48
	6270.0	1058.16	398580.9	1145.6	80769	

Additional static properties of cross section

Alfa-T [1/°K]	ymin ymax [mm]	zmin zmax [mm]	hymin hzmin [mm]	AK AB [cm2]	MB	Tau-T Tau-B [1/m3]	Tau-Vy Tau-Vz [1/m2]
1.2E-05	-405.0	-1095.6		1.108E+03		3.471E+02	2.058E+01
	405.0	1095.6				1.255E+02	1.047E+01

SOFiSTiK AG - www.sofistik.de

Composite bridge 38+50+38, b=14.25m, 2x2HL1100R HISTAR460 , slab 0.30m C30/37

Section values for warping

Wmin[cm2]	Wmax[cm2]	CM[cm6]	CMS[cm4]	ASwyy[cm6]	ASwzz[cm6]	ry[mm]	rz[mm]
-4346.11	4346.114589939508.	6995791.2		-5.24	-166.70	0.0	0.0

Design values of cross section

Mat NoR	A[cm2] It[cm4]	Ay/Az/Ayz [cm2]	Iy/Iz/Iyz [cm4]	ys/zs [mm]	modules [N/mm2]	gam [kN/m]
1	1845.04	607.50	12678933.	0.0	182609	14.48
	6270.0	1058.16	398580.9	1145.6	70234	

Design forces and moments
(C/E = characteristic plastic/elastic, D=plast.Design, F=elast. Design)

	N[kN]	Vy[kN]	Vz[kN]	Mt[kNm]	My[kNm]	Mz[kNm]	y[mm]	z[mm]	BUCK
C	61808.7	14099.76	21585.53	878.47	46267.38	5431.39	0.0	1146.	c c
C	0.0				0.00	0.00	0.0	0.0	COMB
E	61808.7	9399.84	18465.89	557.18	38767.74	3296.90	0.0	1146.	
D	53746.7	12260.66	18770.03	763.89	40232.50	4722.95	0.0	1146.	
D	0.0				0.00	0.00	0.0	0.0	COMB
F	53746.7	8173.78	16057.29	484.50	33711.08	2866.87	0.0	1146.	

Additional Design Data

M	periphery-O/-I [m2/m]	[m2/m]	deff [mm]	t-min [mm]	t-max [mm]	SMP [o/o]	thet-p [tm2/m]	thet-y [tm2/m]	thet-z [tm2/m]	thet-yz [tm2/m]
	7.532		49.0	45.0	52.0	0.0	1.027	0.995	0.031	

Cross section No. 370.2 = CS 10 - prefab. slab C1

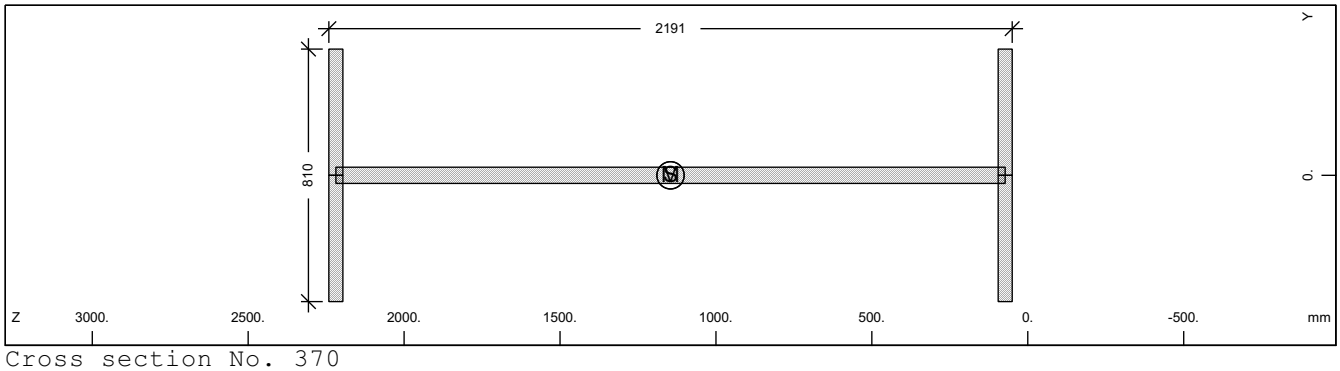

Cross section No. 370

Static properties of cross section

Mat NoR	A[cm2] It[cm4]	Ay/Az/Ayz [cm2]	Iy/Iz/Iyz [cm4]	ys/zs [mm]	modules [N/mm2]	gam [kN/m]
1	1845.04	607.50	12678933.	0.0	210000	14.48
	6270.0	1058.16	398580.9	1145.6	80769	

Additional static properties of cross section

Alfa-T [1/°K]	ymin ymax [mm]	zmin zmax [mm]	hymin hzmin [mm]	AK AB [cm2]	MB	Tau-T Tau-B [1/m3]	Tau-Vy Tau-Vz [1/m2]
1.2E-05	-405.0	-1095.6		1.108E+03		3.471E+02	2.058E+01
	405.0	1095.6				1.255E+02	1.047E+01

Section values for warping

Wmin[cm2]	Wmax[cm2]	CM[cm6]	CMS[cm4]	ASwyy[cm6]	ASwzz[cm6]	ry[mm]	rz[mm]
-4346.11	4346.114589939508.	6995791.2		-5.24	-166.70	0.0	0.0

Design values of cross section

Mat NoR	A[cm2] It[cm4]	Ay/Az/Ayz [cm2]	Iy/Iz/Iyz [cm4]	ys/zs [mm]	modules [N/mm2]	gam [kN/m]
1	1845.04	607.50	12678933.	0.0	182609	14.48
	6270.0	1058.16	398580.9	1145.6	70234	

SOFiSTiK AG - www.sofistik.de

Composite bridge 38+50+38, b=14.25m, 2x2HL1100R HISTAR460 , slab 0.30m C30/37

Design forces and moments
(C/E = characteristic plastic/elastic, D=plast.Design, F=elast. Design)

	N[kN]	Vy[kN]	Vz[kN]	Mt[kNm]	My[kNm]	Mz[kNm]	y[mm]	z[mm]	BUCK
C	61808.7	14099.76	21585.53	878.47	46267.38	5431.39	0.0	1146.	c c
C	0.0				0.00	0.00	0.0	0.0	COMB
E	61808.7	9399.84	18465.89	557.18	38767.74	3296.90	0.0	1146.	
D	53746.7	12260.66	18770.03	763.89	40232.50	4722.95	0.0	1146.	
D	0.0				0.00	0.00	0.0	0.0	COMB
F	53746.7	8173.78	16057.29	484.50	33711.08	2866.87	0.0	1146.	

Additional Design Data

M	periphery-O/-I [m2/m]	[m2/m]	deff [mm]	t-min [mm]	t-max [mm]	SMP [o/o]	thet-p [tm2/m]	thet-y [tm2/m]	thet-z [tm2/m]	thet-yz [tm2/m]
	7.532		49.0	45.0	52.0	0.0	1.027	0.995	0.031	

Cross section No. 370.3 = CS 20 - in-situ conc:C2

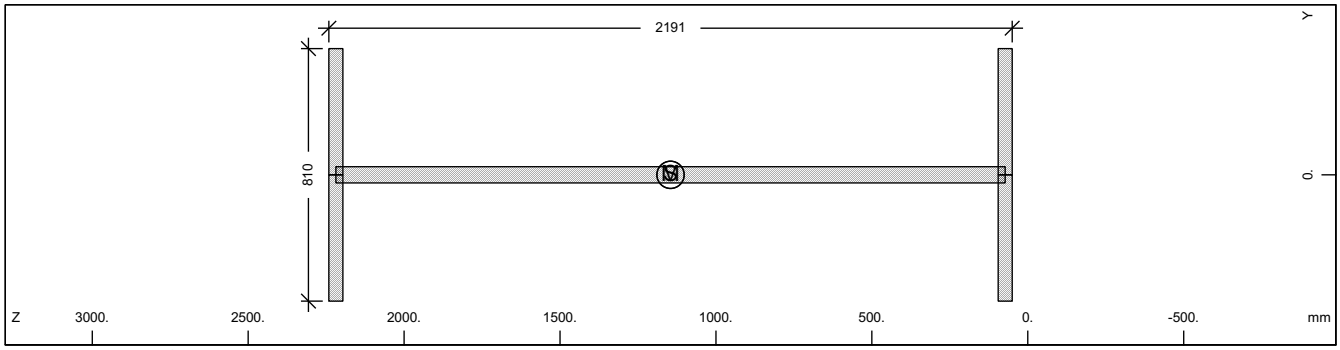

Cross section No. 370

Static properties of cross section

Mat NoR	A[cm2] It[cm4]	Ay/Az/Ayz [cm2]	Iy/Iz/Iyz [cm4]	ys/zs [mm]	modules [N/mm2]	gam [kN/m]
1	1845.04	607.50	12678933.	0.0	210000	14.48
	6270.0	1058.16	398580.9	1145.6	80769	

Additional static properties of cross section

Alfa-T [1/°K]	ymin ymax [mm]	zmin zmax [mm]	hymin hzmin [mm]	AK AB [cm2]	MB	Tau-T Tau-B [1/m3]	Tau-Vy Tau-Vz [1/m2]
1.2E-05	-405.0	-1095.6		1.108E+03		3.471E+02	2.058E+01
	405.0	1095.6				1.255E+02	1.047E+01

Section values for warping

Wmin[cm2]	Wmax[cm2]	CM[cm6]	CMS[cm4]	ASwyy[cm6]	ASwzz[cm6]	ry[mm]	rz[mm]
-4346.11	4346.114589939508.		6995791.2	-5.24	-166.70	0.0	0.0

Design values of cross section

Mat NoR	A[cm2] It[cm4]	Ay/Az/Ayz [cm2]	Iy/Iz/Iyz [cm4]	ys/zs [mm]	modules [N/mm2]	gam [kN/m]
1	1845.04	607.50	12678933.	0.0	182609	14.48
	6270.0	1058.16	398580.9	1145.6	70234	

Design forces and moments
(C/E = characteristic plastic/elastic, D=plast.Design, F=elast. Design)

	N[kN]	Vy[kN]	Vz[kN]	Mt[kNm]	My[kNm]	Mz[kNm]	y[mm]	z[mm]	BUCK
C	61808.7	14099.76	21585.53	878.47	46267.38	5431.39	0.0	1146.	c c
C	0.0				0.00	0.00	0.0	0.0	COMB
E	61808.7	9399.84	18465.89	557.18	38767.74	3296.90	0.0	1146.	
D	53746.7	12260.66	18770.03	763.89	40232.50	4722.95	0.0	1146.	
D	0.0				0.00	0.00	0.0	0.0	COMB
F	53746.7	8173.78	16057.29	484.50	33711.08	2866.87	0.0	1146.	

SOFiSTiK AG - www.sofistik.de

Composite bridge 38+50+38, b=14.25m, 2x2HL1100R HISTAR460 , slab 0.30m C30/37

Additional Design Data

M	periphery-O/-I [m2/m]	[m2/m]	deff [mm]	t-min [mm]	t-max [mm]	SMP [o/o]	thet-p [tm2/m]	thet-y [tm2/m]	thet-z [tm2/m]	thet-yz [tm2/m]
	7.532		49.0	45.0	52.0	0.0	1.027	0.995	0.031	

Cross section No. 370.4 = CS 21 - reinf active:C2

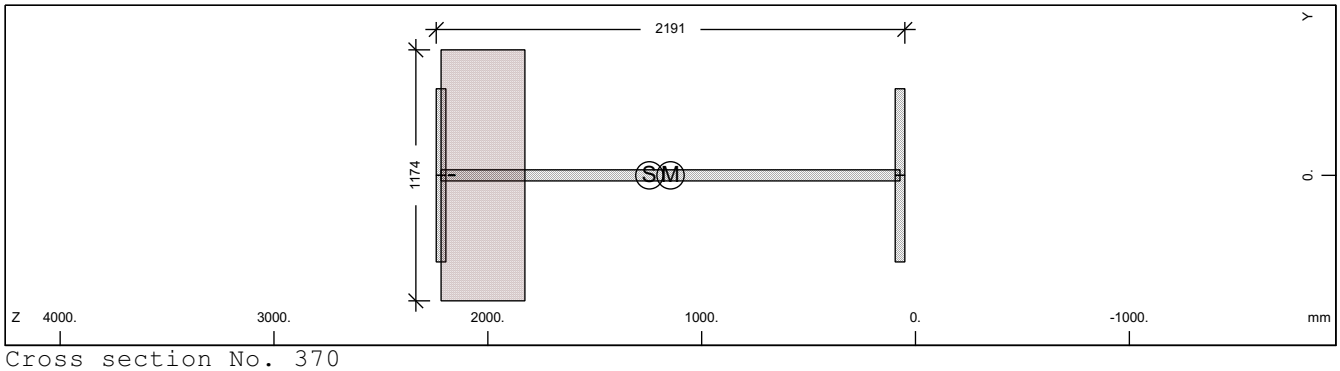

Cross section No. 370

Static properties of cross section

Mat NoR	A[cm2] It[cm4]	Ay/Az/Ayz [cm2]	Iy/Iz/Iyz [cm4]	ys/zs [mm]	modules [N/mm2]	gam [kN/m]
1	2079.54	607.50	14310683.	0.0	210000	26.00
	6270.0	1019.31	398580.9	1244.6	80769	

Additional static properties of cross section

Alfa-T [1/°K]	ymin ymax [mm]	zmin zmax [mm]	hymin hzmin [mm]	AK AB [cm2]	MB	Tau-T Tau-B [1/m3]	Tau-Vy Tau-Vz [1/m2]
1.2E-05	-587.0	-1194.6		3.109E+03		5.479E+00	2.058E+01
	587.0	996.7		4.605E+03		1.255E+02	1.054E+01

Section values for warping

Wmin[cm2]	Wmax[cm2]	CM[cm6]	CMS[cm4]	ASwyy[cm6]	ASwzz[cm6]	ry[mm]	rz[mm]
-4346.11	4346.114589939043.		6995791.2	2.12	76.20	0.0	13.1

Partial cross sections

Mat NoR	A[cm2] It[cm4]	Ay/Az/Ayz [cm2]	Iy/Iz/Iyz [cm4]	ys/zs [mm]	modules [N/mm2]	gam [kN/m]
1	1845.04	607.50	12678933.	0.0	210000	14.48
	14980.0	1016.31	398580.9	1145.6	80769	
25	4604.72		590327.2	0.0	10667	11.51
	21155261.	54.40	0.0	2022.6	4444	
210	0.64	0.00	0.0	0.0	200000	0.00
	2.2	0.00	0.0	2168.7	76923	

Design values of cross section

Mat NoR	A[cm2] It[cm4]	Ay/Az/Ayz [cm2]	Iy/Iz/Iyz [cm4]	ys/zs [mm]	modules [N/mm2]	gam [kN/m]
1	2024.97	607.50	13964400.	0.0	182609	26.00
	6270.0	1018.61	398580.9	1223.6	70234	

Design forces and moments
(C/E = characteristic plastic/elastic, D=plast.Design, F=elast. Design)

	N[kN]	Vy[kN]	Vz[kN]	Mt[kNm]	My[kNm]	Mz[kNm]	y[mm]	z[mm]	BUCK
C	61840.9	14118.33	29645.20	5346.06	46300.26	7506.20	4.6	1147.	c c
C	-3414.9				46467.62	0.00	0.0	1245.	COMB
C	-6907.1				0.00	7458.88	0.0	0.0	COMB
C	-75655.1	14118.33	29645.20	5346.06	-48714.1	-7443.10	-4.6	1516.	
C	-10399.3				-57215.9	0.00	0.0	1245.	COMB
C	-6907.1				0.00	-7458.88	0.0	0.0	COMB
E	69664.6	9399.84	18349.46	3011.53	40132.86	3296.90	0.0	1245.	
E	-69664.6	9399.84	18349.46	3011.53	-40132.9	-3296.90	0.0	1245.	
D	53774.7	12276.81	24236.86	3743.84	40261.10	6098.89	3.5	1147.	

SOFiSTiK AG - www.sofistik.de

Composite bridge 38+50+38, b=14.25m, 2x2HL1100R HISTAR460 , slab 0.30m C30/37

Design forces and moments
(C/E = characteristic plastic/elastic, D=plast.Design, F=elast. Design)

	N[kN]	Vy[kN]	Vz[kN]	Mt[kNm]	My[kNm]	Mz[kNm]	y[mm]	z[mm]	BUCK
D	-2969.5				40406.62	0.00	0.0	1245.	COMB
D	-4604.7				0.00	6074.66	0.0	0.0	COMB
D	-62984.1	12276.81	24236.86	3743.84	-41632.7	-6066.58	-3.5	1447.	
D	-6240.0				-47572.1	0.00	0.0	1245.	COMB
D	-4604.7				0.00	-6074.66	0.0	0.0	COMB
F	60577.9	8173.78	15956.05	2007.69	34898.13	2866.87	0.0	1245.	
F	-60577.9	8173.78	15956.05	2007.69	-34898.1	-2866.87	0.0	1245.	

Additional Design Data

M	periphery-O/-I [m2/m]	[m2/m]	deff [mm]	t-min [mm]	t-max [mm]	SMP [o/o]	thet-p [tm2/m]	thet-y [tm2/m]	thet-z [tm2/m]	thet-yz [tm2/m]
	8.321		50.0	32.0	392.2	0.0	1.535	1.503	0.031	
1	7.532		49.0	45.0	52.0	0.0	1.027	0.995	0.031	
25	0.784		1174.0			0.0	0.015	0.015		
**	0.004		32.0			0.0	0.000		0.000	

Cross section No. 370.5 = CS 30 - in-situ conc:C3

Cross section No. 371 - VFT (353)

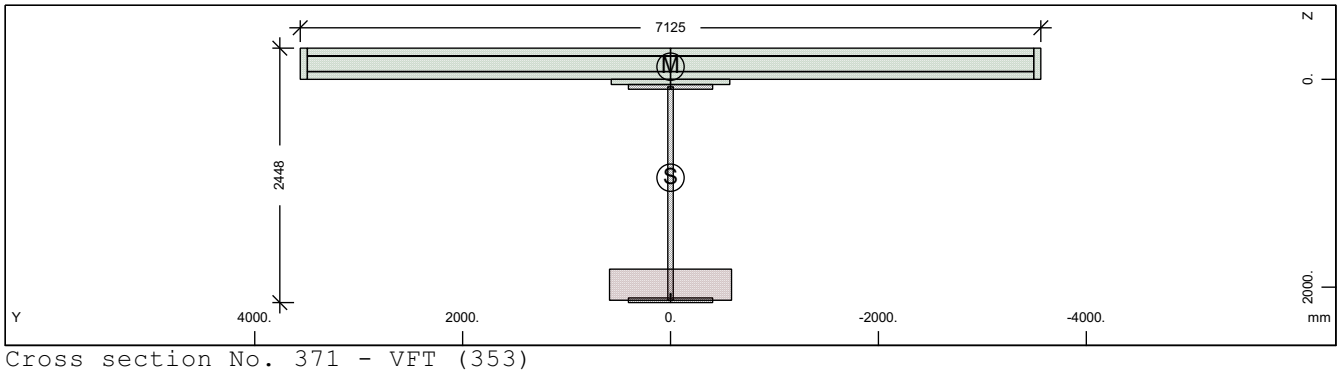

Cross section No. 371 - VFT (353)

Static properties of cross section

Mat NoR	A[cm2] It[cm4]	Ay/Az/Ayz [cm2]	Iy/Iz/Iyz [cm4]	ys/zs [mm]	y/z-sc [mm]	modules [N/mm2]	gam [kN/m]
1	2393.79	364.66	18816792.	0.0	0.0	210000	77.75
	6270.0	680.31	17401393.	946.8	-121.4	80769	

Additional static properties of cross section

Alfa-T [1/°K]	ymin ymax [mm]	zmin zmax [mm]	hymin hzmin [mm]	AK AB [cm2]	MB	Tau-T Tau-B [1/m3]	Tau-Vy Tau-Vz [1/m2]
1.2E-05	-3562.5	-1246.8		2.381E+03		7.153E+00	3.340E+01
	3562.5	1201.6		2.546E+04		1.255E+02	2.072E+01

Section values for warping

Wmin[cm2]	Wmax[cm2]	CM[cm6]	CMS[cm4]	ASwyy[cm6]	ASwzz[cm6]	ry[mm]	rz[mm]
-9101.40	9101.40	1.124E+10	2098767.5	-372.74	-403.06	0.0	1238.8

Partial cross sections

Mat NoR	A[cm2] It[cm4]	Ay/Az/Ayz [cm2]	Iy/Iz/Iyz [cm4]	ys/zs [mm]	modules [N/mm2]	gam [kN/m]
1	1796.75	0.11	11435937.	0.0	210000	14.10
	14544.8	408.41	398580.9	1099.2	80769	
25	3514.62		262492.6	0.0	10667	8.79
	16147049.	11.52	0.0	1976.2	4444	
210	0.64	0.00	0.0	0.0	200000	0.00
	2.2	0.00	0.0	2075.9	76923	
31	21945.00	17177.46	170028.4	0.0	0	54.86
	6417251.4	12120.55	904880243.	-145.5	0	

SOFiSTiK AG - www.sofistik.de

Composite bridge 38+50+38, b=14.25m, 2x2HL1100R HISTAR460 , slab 0.30m C30/37

300	438.80	382.77	24682.7	0.0	200000	0.00
	14.4	284.30	17852949.	-150.0	76923	

Design values of cross section

Mat NoR	A[cm2] It[cm4]	Ay/Az/Ayz [cm2]	Iy/Iz/Iyz [cm4]	ys/zs [mm]	modules [N/mm2]	gam [kN/m]
1	2352.14	364.66	18364437.	0.0	182609	77.75
	6270.0	679.66	17401393.	928.5	70234	

Design forces and moments
(C/E = characteristic plastic/elastic, D=plast.Design, F=elast. Design)

	N[kN]	Vy[kN]	Vz[kN]	Mt[kNm]	My[kNm]	Mz[kNm]	y[mm]	z[mm]	BUCK
C	82163.6	62994.74	55713.11	102852.9	77809.41	102432.8	27.7	-74.8	c c
C	-82432.4				139845.1	0.00	0.0	946.8	COMB
C	-38189.4				0.00	102638.7	0.0	0.0	COMB
C	-150281.	62994.74	55713.11	102852.9	-78267.7	-102140.	-27.7	773.1	
C	6053.5				-78793.6	0.00	0.0	946.8	COMB
C	-38189.4				0.00	-102639.	0.0	0.0	COMB
E	80192.1	8642.74	13932.41	2306.58	52459.61	26149.46	0.0	946.8	
E	-80192.1	8642.74	13932.41	2306.58	-52459.6	-26149.5	0.0	946.8	
D	71446.6	47431.23	41962.20	68761.00	66549.87	77185.50	20.1	-66.4	
D	-58322.5				107014.9	0.00	0.0	946.8	COMB
D	-25459.6				0.00	77299.84	0.0	0.0	COMB
D	-116859.	47431.23	41962.20	68760.98	-65409.3	-77044.4	-20.1	702.4	
D	7403.3				-66313.9	0.00	0.0	946.8	COMB
D	-25459.6				0.00	-77299.8	0.0	0.0	COMB
F	69732.3	7515.43	12115.14	1537.72	45617.05	22738.66	0.0	946.8	
F	-69732.3	7515.43	12115.14	1537.72	-45617.1	-22738.7	0.0	946.8	

Additional Design Data

M	periphery-O/-I [m2/m]	[m2/m]	deff [mm]	t-min [mm]	t-max [mm]	SMP [o/o]	thet-p [tm2/m]	thet-y [tm2/m]	thet-z [tm2/m]	thet-yz [tm2/m]
	52.429		9.1	3.1	300.0	0.0	28.017	5.364	22.653	
1	7.347		48.9	45.0	52.0	0.0	0.929	0.898	0.031	
25	0.599		1174.0			0.0	0.007	0.007		
**	0.004		32.0			0.0	0.000		0.000	
31	16.530		265.5	50.0	300.0	0.0	22.626	0.004	22.622	
**	27.949		3.1	3.1	3.1	0.0	0.000	0.000	0.000	

Cross section No. 371.1 = CS 1 - steel alone

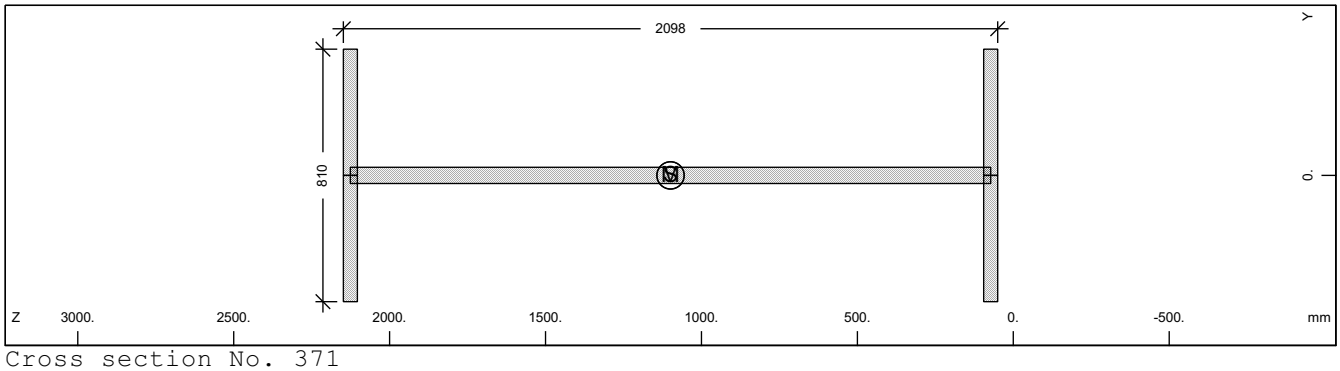

Cross section No. 371

Static properties of cross section

Mat NoR	A[cm2] It[cm4]	Ay/Az/Ayz [cm2]	Iy/Iz/Iyz [cm4]	ys/zs [mm]	modules [N/mm2]	gam [kN/m]
1	1796.75	607.50	11435937.	0.0	210000	14.10
	6270.0	1011.30	398580.9	1099.2	80769	

SOFiSTiK AG - www.sofistik.de

Composite bridge 38+50+38, b=14.25m, 2x2HL1100R HISTAR460 , slab 0.30m C30/37

Additional static properties of cross section

Alfa-T	ymin ymax	zmin zmax	hymin hzmin	AK AB	MB	Tau-T Tau-B	Tau-Vy Tau-Vz
[1/°K]	[mm]	[mm]	[mm]	[cm2]		[1/m3]	[1/m2]
1.2E-05	-405.0	-1049.2		1.076E+03		3.575E+02	2.058E+01
	405.0	1049.2				1.255E+02	1.090E+01

Section values for warping

Wmin[cm2]	Wmax[cm2]	CM[cm6]	CMS[cm4]	ASwyy[cm6]	ASwzz[cm6]	ry[mm]	rz[mm]
-4158.08	4158.084201374033.	6403556.5		5.09	146.17	0.0	0.0

Design values of cross section

Mat NoR	A[cm2] It[cm4]	Ay/Az/Ayz [cm2]	Iy/Iz/Iyz [cm4]	ys/zs [mm]	modules [N/mm2]	gam [kN/m]
1	1796.75	607.50	11435937.	0.0	182609	14.10
	6270.0	1011.30	398580.9	1099.2	70234	

Design forces and moments
(C/E = characteristic plastic/elastic, D=plast.Design, F=elast. Design)

	N[kN]	Vy[kN]	Vz[kN]	Mt[kNm]	My[kNm]	Mz[kNm]	y[mm]	z[mm]	BUCK
C	60191.2	14099.76	20651.66	854.19	43435.34	5410.36	0.0	1099.	c c
C	0.0				0.00	0.00	0.0	0.0	COMB
E	60191.2	9399.84	17741.52	540.99	36514.40	3296.90	0.0	1099.	
D	52340.2	12260.66	17957.97	742.77	37769.86	4704.66	0.0	1099.	
D	0.0				0.00	0.00	0.0	0.0	COMB
F	52340.2	8173.78	15427.41	470.42	31751.65	2866.87	0.0	1099.	

Additional Design Data

M	periphery-O/-I [m2/m]	[m2/m]	deff [mm]	t-min [mm]	t-max [mm]	SMP [o/o]	thet-p [tm2/m]	thet-y [tm2/m]	thet-z [tm2/m]	thet-yz [tm2/m]
	7.347		48.9	45.0	52.0	0.0	0.929	0.898	0.031	

Cross section No. 371.2 = CS 10 - prefab. slab C1

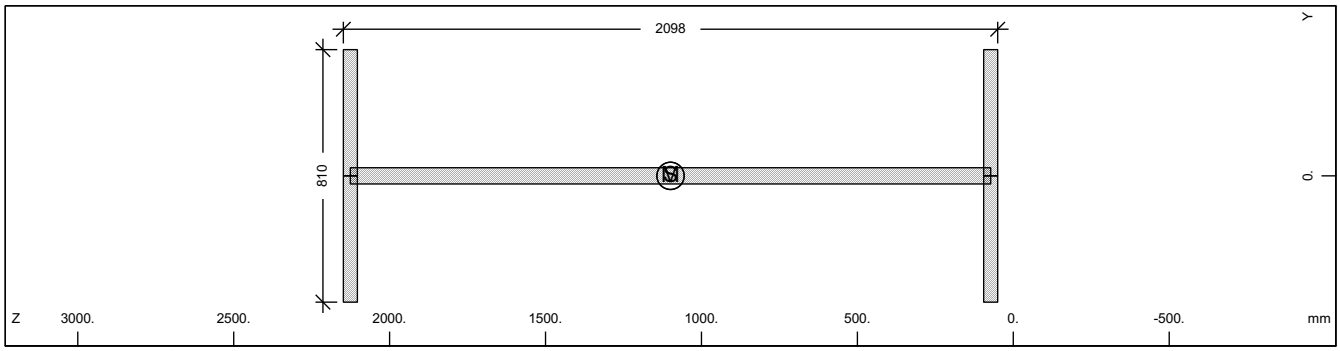

Cross section No. 371

Static properties of cross section

Mat NoR	A[cm2] It[cm4]	Ay/Az/Ayz [cm2]	Iy/Iz/Iyz [cm4]	ys/zs [mm]	modules [N/mm2]	gam [kN/m]
1	1796.75	607.50	11435937.	0.0	210000	14.10
	6270.0	1011.30	398580.9	1099.2	80769	

Additional static properties of cross section

Alfa-T	ymin ymax	zmin zmax	hymin hzmin	AK AB	MB	Tau-T Tau-B	Tau-Vy Tau-Vz
[1/°K]	[mm]	[mm]	[mm]	[cm2]		[1/m3]	[1/m2]
1.2E-05	-405.0	-1049.2		1.076E+03		3.575E+02	2.058E+01
	405.0	1049.2				1.255E+02	1.090E+01

Section values for warping

Wmin[cm2]	Wmax[cm2]	CM[cm6]	CMS[cm4]	ASwyy[cm6]	ASwzz[cm6]	ry[mm]	rz[mm]
-4158.08	4158.084201374033.	6403556.5		5.09	146.17	0.0	0.0

SOFiSTiK AG - www.sofistik.de

Composite bridge 38+50+38, b=14.25m, 2x2HL1100R HISTAR460 , slab 0.30m C30/37

Design values of cross section

Mat NoR	A[cm2] It[cm4]	Ay/Az/Ayz [cm2]	Iy/Iz/Iyz [cm4]	ys/zs [mm]	modules [N/mm2]	gam [kN/m]
1	1796.75	607.50	11435937.	0.0	182609	14.10
	6270.0	1011.30	398580.9	1099.2	70234	

Design forces and moments
(C/E = characteristic plastic/elastic, D=plast.Design, F=elast. Design)

	N[kN]	Vy[kN]	Vz[kN]	Mt[kNm]	My[kNm]	Mz[kNm]	y[mm]	z[mm]	BUCK
C	60191.2	14099.76	20651.66	854.19	43435.34	5410.36	0.0	1099.	c c
C	0.0				0.00	0.00	0.0	0.0	COMB
E	60191.2	9399.84	17741.52	540.99	36514.40	3296.90	0.0	1099.	
D	52340.2	12260.66	17957.97	742.77	37769.86	4704.66	0.0	1099.	
D	0.0				0.00	0.00	0.0	0.0	COMB
F	52340.2	8173.78	15427.41	470.42	31751.65	2866.87	0.0	1099.	

Additional Design Data

M	periphery-O/-I [m2/m] [m2/m]	deff [mm]	t-min [mm]	t-max [mm]	SMP [o/o]	thet-p [tm2/m]	thet-y [tm2/m]	thet-z [tm2/m]	thet-yz [tm2/m]
	7.347	48.9	45.0	52.0	0.0	0.929	0.898	0.031	

Cross section No. 371.3 = CS 20 - in-situ conc:C2

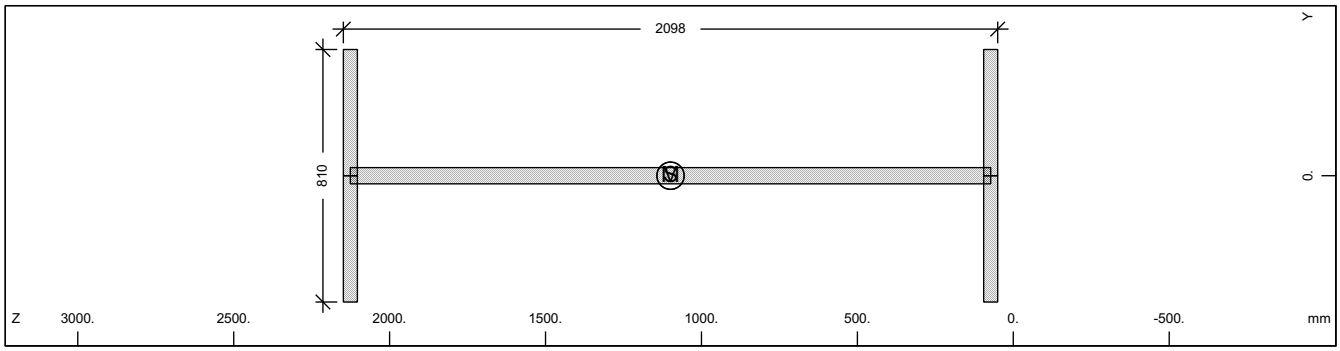

Cross section No. 371

Static properties of cross section

Mat NoR	A[cm2] It[cm4]	Ay/Az/Ayz [cm2]	Iy/Iz/Iyz [cm4]	ys/zs [mm]	modules [N/mm2]	gam [kN/m]
1	1796.75	607.50	11435937.	0.0	210000	14.10
	6270.0	1011.30	398580.9	1099.2	80769	

Additional static properties of cross section

Alfa-T [1/°K]	ymin ymax [mm]	zmin zmax [mm]	hymin hzmin [mm]	AK AB [cm2]	MB	Tau-T Tau-B [1/m3]	Tau-Vy Tau-Vz [1/m2]
1.2E-05	-405.0	-1049.2		1.076E+03		3.575E+02	2.058E+01
	405.0	1049.2				1.255E+02	1.090E+01

Section values for warping

Wmin[cm2]	Wmax[cm2]	CM[cm6]	CMS[cm4]	ASwyy[cm6]	ASwzz[cm6]	ry[mm]	rz[mm]
-4158.08	4158.084201374033.	6403556.5		5.09	146.17	0.0	0.0

Design values of cross section

Mat NoR	A[cm2] It[cm4]	Ay/Az/Ayz [cm2]	Iy/Iz/Iyz [cm4]	ys/zs [mm]	modules [N/mm2]	gam [kN/m]
1	1796.75	607.50	11435937.	0.0	182609	14.10
	6270.0	1011.30	398580.9	1099.2	70234	

Design forces and moments
(C/E = characteristic plastic/elastic, D=plast.Design, F=elast. Design)

	N[kN]	Vy[kN]	Vz[kN]	Mt[kNm]	My[kNm]	Mz[kNm]	y[mm]	z[mm]	BUCK
C	60191.2	14099.76	20651.66	854.19	43435.34	5410.36	0.0	1099.	c c
C	0.0				0.00	0.00	0.0	0.0	COMB
E	60191.2	9399.84	17741.52	540.99	36514.40	3296.90	0.0	1099.	

SOFiSTiK AG - www.sofistik.de

Composite bridge 38+50+38, b=14.25m, 2x2HL1100R HISTAR460 , slab 0.30m C30/37

Design forces and moments
(C/E = characteristic plastic/elastic, D=plast.Design, F=elast. Design)

	N[kN]	Vy[kN]	Vz[kN]	Mt[kNm]	My[kNm]	Mz[kNm]	y[mm]	z[mm]	BUCK
D	52340.2	12260.66	17957.97	742.77	37769.86	4704.66	0.0	1099.	
D	0.0				0.00	0.00	0.0	0.0	COMB
F	52340.2	8173.78	15427.41	470.42	31751.65	2866.87	0.0	1099.	

Additional Design Data

M	periphery-O/-I [m2/m]	[m2/m]	deff [mm]	t-min [mm]	t-max [mm]	SMP [o/o]	thet-p [tm2/m]	thet-y [tm2/m]	thet-z [tm2/m]	thet-yz [tm2/m]
	7.347		48.9	45.0	52.0	0.0	0.929	0.898	0.031	

Cross section No. 371.4 = CS 21 - reinf active:C2

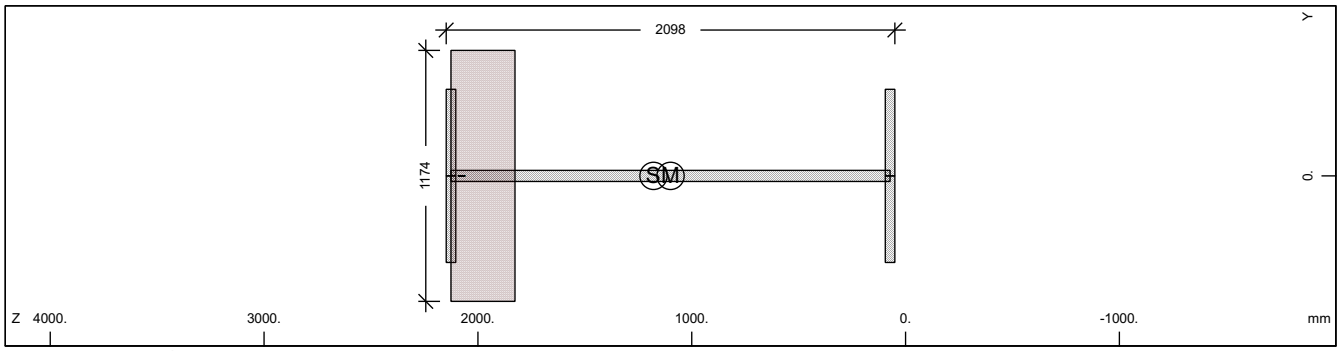

Cross section No. 371

Static properties of cross section

Mat NoR	A[cm2] It[cm4]	Ay/Az/Ayz [cm2]	Iy/Iz/Iyz [cm4]	ys/zs [mm]	modules [N/mm2]	gam [kN/m]
1	1975.89	607.50	12703160.	0.0	210000	22.89
	6270.0	988.10	398580.9	1178.7	80769	

Additional static properties of cross section

Alfa-T [1/°K]	ymin ymax [mm]	zmin zmax [mm]	hymin hzmin [mm]	AK AB [cm2]	MB	Tau-T Tau-B [1/m3]	Tau-Vy Tau-Vz [1/m2]
1.2E-05	-587.0	-1128.7		2.381E+03		7.154E+00	2.058E+01
	587.0	969.6		3.515E+03		1.255E+02	1.092E+01

Section values for warping

Wmin[cm2]	Wmax[cm2]	CM[cm6]	CMS[cm4]	ASwyy[cm6]	ASwzz[cm6]	ry[mm]	rz[mm]
-4158.08	4158.084201374033.		6403556.5	1.14	36.34	0.0	15.2

Partial cross sections

Mat NoR	A[cm2] It[cm4]	Ay/Az/Ayz [cm2]	Iy/Iz/Iyz [cm4]	ys/zs [mm]	modules [N/mm2]	gam [kN/m]
1	1796.75	607.50	11435937.	0.0	210000	14.10
	14544.8	986.38	398580.9	1099.2	80769	
25	3514.62		262492.6	0.0	10667	8.79
	16147049.	31.31	0.0	1976.2	4444	
210	0.64	0.00	0.0	0.0	200000	0.00
	2.2	0.00	0.0	2075.9	76923	

Design values of cross section

Mat NoR	A[cm2] It[cm4]	Ay/Az/Ayz [cm2]	Iy/Iz/Iyz [cm4]	ys/zs [mm]	modules [N/mm2]	gam [kN/m]
1	1934.23	607.50	12429443.	0.0	182609	22.89
	6270.0	987.70	398580.9	1161.6	70234	

Design forces and moments
(C/E = characteristic plastic/elastic, D=plast.Design, F=elast. Design)

	N[kN]	Vy[kN]	Vz[kN]	Mt[kNm]	My[kNm]	Mz[kNm]	y[mm]	z[mm]	BUCK
C	60223.4	14118.33	26912.66	4265.96	43466.73	6986.74	3.6	1100.	c c
C	-2739.0				43574.39	0.00	0.0	1179.	COMB

SOFiSTiK AG - www.sofistik.de

Composite bridge 38+50+38, b=14.25m, 2x2HL1100R HISTAR460 , slab 0.30m C30/37

Design forces and moments
(C/E = characteristic plastic/elastic, D=plast.Design, F=elast. Design)

	N[kN]	Vy[kN]	Vz[kN]	Mt[kNm]	My[kNm]	Mz[kNm]	y[mm]	z[mm]	BUCK
C	-5271.9				0.00	6957.93	0.0	0.0	COMB
C	-70767.2	14118.33	26912.66	4265.96	-45032.8	-6948.33	-3.6	1400.	
C	-7804.9				-51982.7	0.00	0.0	1179.	COMB
C	-5271.9				0.00	-6957.93	0.0	0.0	COMB
E	66192.2	9399.84	17710.43	2306.54	37702.36	3296.90	0.0	1179.	
E	-66192.2	9399.84	17710.43	2306.54	-37702.4	-3296.90	0.0	1179.	
D	52368.2	12276.81	22225.68	3018.85	37797.15	5749.24	2.5	1100.	
D	-2381.7				37890.78	0.00	0.0	1179.	COMB
D	-3514.6				0.00	5736.43	0.0	0.0	COMB
D	-59397.4	12276.81	22225.68	3018.85	-43139.8	-5731.56	-2.5	1332.	
D	-4647.5				-43496.3	0.00	0.0	1179.	COMB
D	-3514.6				0.00	-5736.43	0.0	0.0	COMB
F	57558.4	8173.78	15400.38	1537.70	32784.66	2866.87	0.0	1179.	
F	-57558.4	8173.78	15400.38	1537.70	-32784.7	-2866.87	0.0	1179.	

Additional Design Data

M	periphery-O/-I [m2/m]	[m2/m]	deff [mm]	t-min [mm]	t-max [mm]	SMP [o/o]	thet-p [tm2/m]	thet-y [tm2/m]	thet-z [tm2/m]	thet-yz [tm2/m]
	7.950		49.7	32.0	299.4	0.0	1.352	1.321	0.031	
1	7.347		48.9	45.0	52.0	0.0	0.929	0.898	0.031	
25	0.599		1174.0			0.0	0.007	0.007		
**	0.004		32.0			0.0	0.000		0.000	

Cross section No. 371.5 = CS 30 - in-situ conc:C3

Cross section No. 372 - VFT (353)

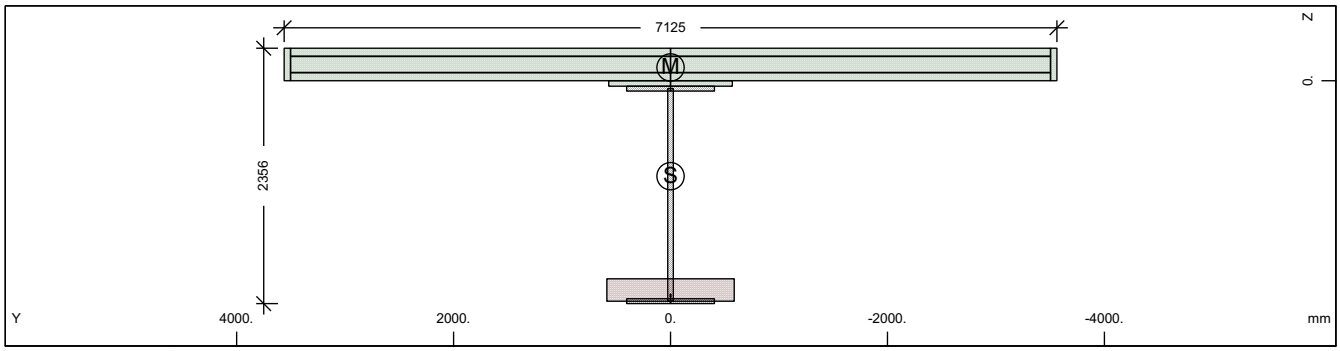

Cross section No. 372 - VFT (353)

Static properties of cross section

Mat NoR	A[cm2] It[cm4]	Ay/Az/Ayz [cm2]	Iy/Iz/Iyz [cm4]	ys/zs [mm]	y/z-sc [mm]	modules [N/mm2]	gam [kN/m]
1	2291.28	365.52	16630407.	0.0	0.0	210000	74.65
	6270.0	634.32	17540705.	880.2	-122.7	80769	

Additional static properties of cross section

Alfa-T [1/°K]	ymin ymax [mm]	zmin zmax [mm]	hymin hzmin [mm]	AK AB [cm2]	MB	Tau-T Tau-B [1/m3]	Tau-Vy Tau-Vz [1/m2]
1.2E-05	-3562.5	-1180.2		1.654E+03		1.030E+01	3.332E+01
	3562.5	1175.3		2.437E+04		1.255E+02	2.217E+01

Section values for warping

Wmin[cm2]	Wmax[cm2]	CM[cm6]	CMS[cm4]	ASwyy[cm6]	ASwzz[cm6]	ry[mm]	rz[mm]
-8730.53	8730.53	1.043E+10	1820532.8	-149.89	-142.11	0.0	1080.2

SOFiSTiK AG - www.sofistik.de

Composite bridge 38+50+38, b=14.25m, 2x2HL1100R HISTAR460 , slab 0.30m C30/37

Partial cross sections

Mat NoR	A[cm2] It[cm4]	Ay/Az/Ayz [cm2]	Iy/Iz/Iyz [cm4]	ys/zs [mm]	modules [N/mm2]	gam [kN/m]
1	1748.47	0.11	10270397.	0.0	210000	13.73
	14109.6	365.36	398580.9	1052.8	80769	
25	2424.52		86170.2	0.0	10667	6.06
	11138836.	4.48	0.0	1929.8	4444	
210	0.64	0.00	0.0	0.0	200000	0.00
	2.2	0.00	0.0	1983.0	76923	
31	21945.00	16985.40	170028.4	0.0	0	54.86
	6417251.4	11901.72	904880243.	-145.5	0	
300	440.00	383.68	24749.9	0.0	200000	0.00
	14.5	281.63	17999226.	-150.0	76923	

Design values of cross section

Mat NoR	A[cm2] It[cm4]	Ay/Az/Ayz [cm2]	Iy/Iz/Iyz [cm4]	ys/zs [mm]	modules [N/mm2]	gam [kN/m]
1	2262.54	365.52	16308811.	0.0	182609	74.65
	6270.0	633.76	17540704.	866.8	70234	

Design forces and moments
(C/E = characteristic plastic/elastic, D=plast.Design, F=elast. Design)

	N[kN]	Vy[kN]	Vz[kN]	Mt[kNm]	My[kNm]	Mz[kNm]	y[mm]	z[mm]	BUCK
C	80605.8	63029.25	52980.57	101772.8	73307.48	102075.8	28.5	-129.	c c
C	-81789.9				131418.8	0.00	0.0	880.2	COMB
C	-36554.3				0.00	102346.8	0.0	0.0	COMB
C	-146595.	63029.25	52980.57	101772.8	-70449.1	-101869.	-28.5	631.2	
C	8681.4				-71530.7	0.00	0.0	880.2	COMB
C	-36554.3				0.00	-102347.	0.0	0.0	COMB
E	76757.8	8664.67	13019.94	1601.59	47400.49	26287.21	0.0	880.2	
E	-76757.8	8664.67	13019.94	1601.59	-47400.5	-26287.2	0.0	880.2	
D	70092.0	47461.24	39951.03	68036.05	62540.76	76996.05	20.1	-73.5	
D	-57763.9				100577.0	0.00	0.0	880.2	COMB
D	-24369.5				0.00	77143.41	0.0	0.0	COMB
D	-114085.	47461.24	39951.02	68036.04	-59307.4	-76898.6	-20.1	582.3	
D	9024.8				-60651.6	0.00	0.0	880.2	COMB
D	-24369.5				0.00	-77143.4	0.0	0.0	COMB
F	66745.9	7534.50	11321.69	1067.73	41217.82	22858.45	0.0	880.2	
F	-66745.9	7534.50	11321.69	1067.73	-41217.8	-22858.4	0.0	880.2	

Additional Design Data

M	periphery-O/-I [m2/m]	[m2/m]	deff [mm]	t-min [mm]	t-max [mm]	SMP [o/o]	thet-p [tm2/m]	thet-y [tm2/m]	thet-z [tm2/m]	thet-yz [tm2/m]
	52.133		8.8	3.1	300.0	0.0	26.918	4.265	22.653	
1	7.161		48.8	45.0	52.0	0.0	0.838	0.806	0.031	
25	0.413		1174.0			0.0	0.002	0.002		
**	0.004		32.0			0.0	0.000	0.000	0.000	
31	16.530		265.5	50.0	300.0	0.0	22.626	0.004	22.622	
**	28.025		3.1	3.1	3.1	0.0	0.000	0.000	0.000	

SOFiSTiK AG - www.sofistik.de

Composite bridge 38+50+38, b=14.25m, 2x2HL1100R HISTAR460 , slab 0.30m C30/37

Cross section No. 372.1 = CS 1 - steel alone

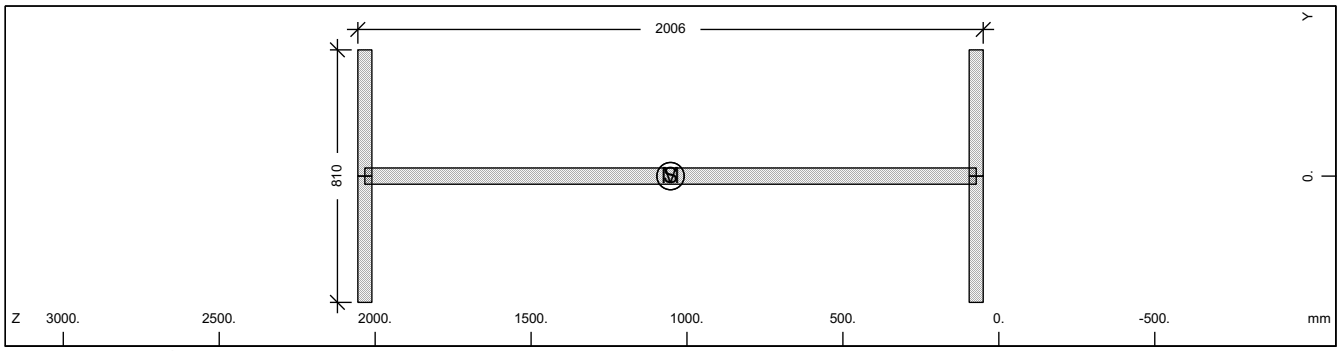

Cross section No. 372

Static properties of cross section

Mat NoR	A[cm2] It[cm4]	Ay/Az/Ayz [cm2]	Iy/Iz/Iyz [cm4]	ys/zs [mm]	modules [N/mm2]	gam [kN/m]
1	1748.47	607.50	10270397.	0.0	210000	13.73
	6270.0	964.28	398580.9	1052.8	80769	

Additional static properties of cross section

Alfa-T [1/°K]	ymin ymax [mm]	zmin zmax [mm]	hymin hzmin [mm]	AK AB [cm2]	MB	Tau-T Tau-B [1/m3]	Tau-Vy Tau-Vz [1/m2]
1.2E-05	-405.0	-1002.8		1.044E+03		3.685E+02	2.058E+01
	405.0	1002.8				1.255E+02	1.137E+01

Section values for warping

Wmin[cm2]	Wmax[cm2]	CM[cm6]	CMS[cm4]	ASwyy[cm6]	ASwzz[cm6]	ry[mm]	rz[mm]
-3970.05	3970.053	829991926.	5837511.7	-0.37	-9.46	0.0	0.0

Design values of cross section

Mat NoR	A[cm2] It[cm4]	Ay/Az/Ayz [cm2]	Iy/Iz/Iyz [cm4]	ys/zs [mm]	modules [N/mm2]	gam [kN/m]
1	1748.47	607.50	10270397.	0.0	182609	13.73
	6270.0	964.28	398580.9	1052.8	70234	

Design forces and moments
(C/E = characteristic plastic/elastic, D=plast.Design, F=elast. Design)

	N[kN]	Vy[kN]	Vz[kN]	Mt[kNm]	My[kNm]	Mz[kNm]	y[mm]	z[mm]	BUCK
C	58573.7	14099.76	19717.79	829.91	40678.39	5389.33	0.0	1053.	c c
C	0.0				0.00	0.00	0.0	0.0	COMB
E	58573.7	9399.84	17013.19	524.80	34311.18	3296.90	0.0	1053.	
D	50933.7	12260.66	17145.91	721.66	35372.52	4686.38	0.0	1053.	
D	0.0				0.00	0.00	0.0	0.0	COMB
F	50933.7	8173.78	14794.08	456.35	29835.81	2866.87	0.0	1053.	

Additional Design Data

M	periphery-O/-I [m2/m] [m2/m]	deff [mm]	t-min [mm]	t-max [mm]	SMP [o/o]	thet-p [tm2/m]	thet-y [tm2/m]	thet-z [tm2/m]	thet-yz [tm2/m]
	7.161	48.8	45.0	52.0	0.0	0.838	0.806	0.031	

SOFiSTiK AG - www.sofistik.de

Composite bridge 38+50+38, b=14.25m, 2x2HL1100R HISTAR460 , slab 0.30m C30/37

Cross section No. 372.2 = CS 10 - prefab. slab C1

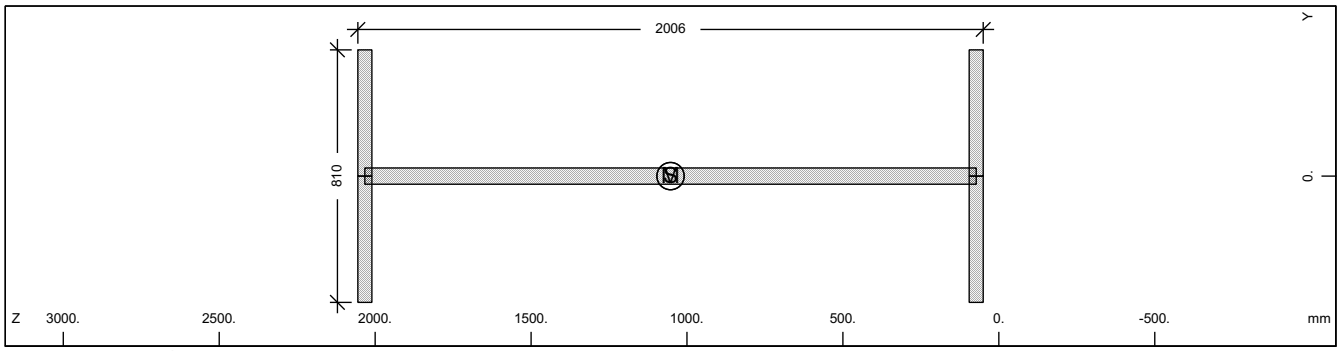

Cross section No. 372

Static properties of cross section

Mat / NoR	A[cm2] / It[cm4]	Ay/Az/Ayz [cm2]	Iy/Iz/Iyz [cm4]	ys/zs [mm]	modules [N/mm2]	gam [kN/m]
1	1748.47	607.50	10270397.	0.0	210000	13.73
	6270.0	964.28	398580.9	1052.8	80769	

Additional static properties of cross section

Alfa-T [1/°K]	ymin / ymax [mm]	zmin / zmax [mm]	hymin / hzmin [mm]	AK / AB [cm2]	MB	Tau-T / Tau-B [1/m3]	Tau-Vy / Tau-Vz [1/m2]
1.2E-05	-405.0	-1002.8		1.044E+03		3.685E+02	2.058E+01
	405.0	1002.8				1.255E+02	1.137E+01

Section values for warping

Wmin[cm2]	Wmax[cm2]	CM[cm6]	CMS[cm4]	ASwyy[cm6]	ASwzz[cm6]	ry[mm]	rz[mm]
-3970.05	3970.053829991926.		5837511.7	-0.37	-9.46	0.0	0.0

Design values of cross section

Mat / NoR	A[cm2] / It[cm4]	Ay/Az/Ayz [cm2]	Iy/Iz/Iyz [cm4]	ys/zs [mm]	modules [N/mm2]	gam [kN/m]
1	1748.47	607.50	10270397.	0.0	182609	13.73
	6270.0	964.28	398580.9	1052.8	70234	

Design forces and moments
(C/E = characteristic plastic/elastic, D=plast.Design, F=elast. Design)

	N[kN]	Vy[kN]	Vz[kN]	Mt[kNm]	My[kNm]	Mz[kNm]	y[mm]	z[mm]	BUCK
C	58573.7	14099.76	19717.79	829.91	40678.39	5389.33	0.0	1053.	c c
C	0.0				0.00	0.00	0.0	0.0	COMB
E	58573.7	9399.84	17013.19	524.80	34311.18	3296.90	0.0	1053.	
D	50933.7	12260.66	17145.91	721.66	35372.52	4686.38	0.0	1053.	
D	0.0				0.00	0.00	0.0	0.0	COMB
F	50933.7	8173.78	14794.08	456.35	29835.81	2866.87	0.0	1053.	

Additional Design Data

M	periphery-O/-I [m2/m]	[m2/m]	deff [mm]	t-min [mm]	t-max [mm]	SMP [o/o]	thet-p [tm2/m]	thet-y [tm2/m]	thet-z [tm2/m]	thet-yz [tm2/m]
	7.161		48.8	45.0	52.0	0.0	0.838	0.806	0.031	

SOFiSTiK AG - www.sofistik.de

Composite bridge 38+50+38, b=14.25m, 2x2HL1100R HISTAR460 , slab 0.30m C30/37

Cross section No. 372.3 = CS 20 - in-situ conc:C2

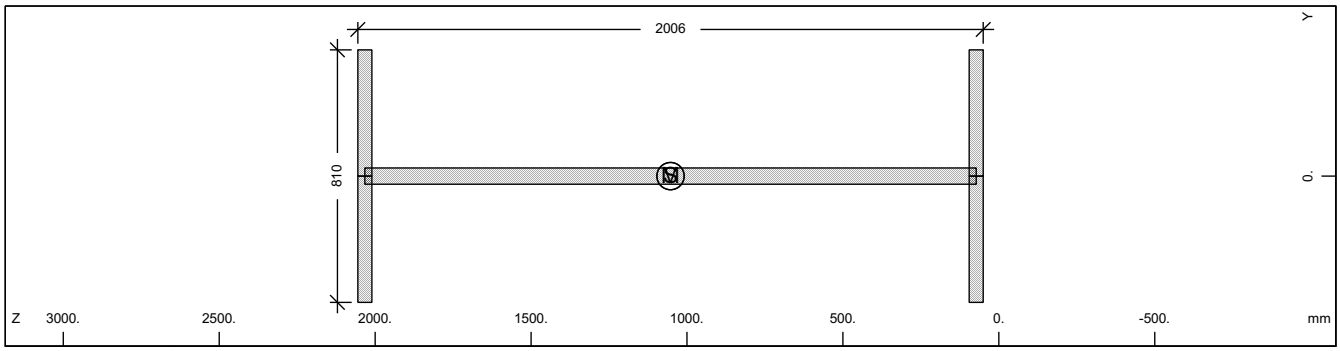

Cross section No. 372

Static properties of cross section

Mat NoR	A[cm2] It[cm4]	Ay/Az/Ayz [cm2]	Iy/Iz/Iyz [cm4]	ys/zs [mm]	modules [N/mm2]	gam [kN/m]
1	1748.47	607.50	10270397.	0.0	210000	13.73
	6270.0	964.28	398580.9	1052.8	80769	

Additional static properties of cross section

Alfa-T [1/°K]	ymin ymax [mm]	zmin zmax [mm]	hymin hzmin [mm]	AK AB [cm2]	MB	Tau-T Tau-B [1/m3]	Tau-Vy Tau-Vz [1/m2]
1.2E-05	-405.0	-1002.8		1.044E+03		3.685E+02	2.058E+01
	405.0	1002.8				1.255E+02	1.137E+01

Section values for warping

Wmin[cm2]	Wmax[cm2]	CM[cm6]	CMS[cm4]	ASwyy[cm6]	ASwzz[cm6]	ry[mm]	rz[mm]
-3970.05	3970.053829991926.		5837511.7	-0.37	-9.46	0.0	0.0

Design values of cross section

Mat NoR	A[cm2] It[cm4]	Ay/Az/Ayz [cm2]	Iy/Iz/Iyz [cm4]	ys/zs [mm]	modules [N/mm2]	gam [kN/m]
1	1748.47	607.50	10270397.	0.0	182609	13.73
	6270.0	964.28	398580.9	1052.8	70234	

Design forces and moments
(C/E = characteristic plastic/elastic, D=plast.Design, F=elast. Design)

	N[kN]	Vy[kN]	Vz[kN]	Mt[kNm]	My[kNm]	Mz[kNm]	y[mm]	z[mm]	BUCK
C	58573.7	14099.76	19717.79	829.91	40678.39	5389.33	0.0	1053.	c c
C	0.0				0.00	0.00	0.0	0.0	COMB
E	58573.7	9399.84	17013.19	524.80	34311.18	3296.90	0.0	1053.	
D	50933.7	12260.66	17145.91	721.66	35372.52	4686.38	0.0	1053.	
D	0.0				0.00	0.00	0.0	0.0	COMB
F	50933.7	8173.78	14794.08	456.35	29835.81	2866.87	0.0	1053.	

Additional Design Data

M	periphery-O/-I [m2/m] [m2/m]	deff [mm]	t-min [mm]	t-max [mm]	SMP [o/o]	thet-p [tm2/m]	thet-y [tm2/m]	thet-z [tm2/m]	thet-yz [tm2/m]
	7.161	48.8	45.0	52.0	0.0	0.838	0.806	0.031	

SOFiSTiK AG - www.sofistik.de

Composite bridge 38+50+38, b=14.25m, 2x2HL1100R HISTAR460 , slab 0.30m C30/37

Cross section No. 372.4 = CS 21 - reinf active:C2

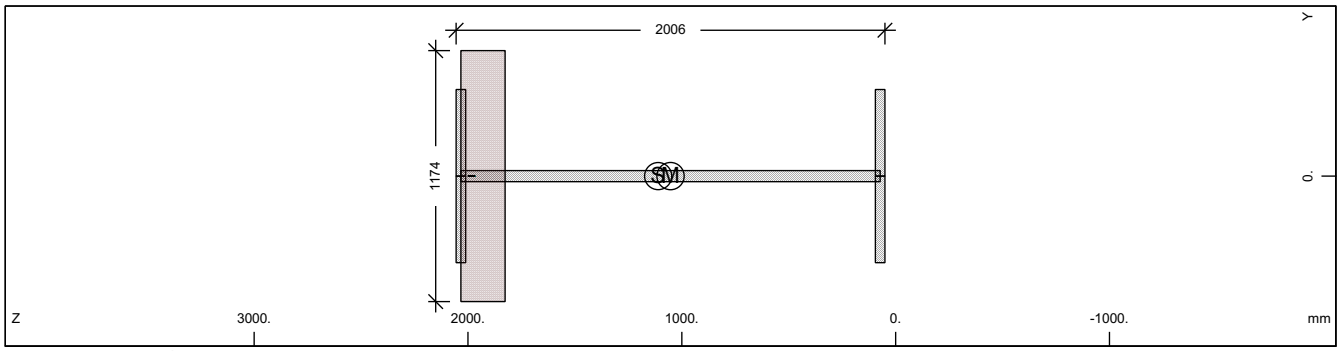

Cross section No. 372

Static properties of cross section

Mat NoR	A[cm2] It[cm4]	Ay/Az/Ayz [cm2]	Iy/Iz/Iyz [cm4]	ys/zs [mm]	modules [N/mm2]	gam [kN/m]
1	1872.23	607.50	11164294.	0.0	210000	19.79
	6270.0	954.31	398580.9	1110.7	80769	

Additional static properties of cross section

Alfa-T [1/°K]	ymin ymax [mm]	zmin zmax [mm]	hymin hzmin [mm]	AK AB [cm2]	MB	Tau-T Tau-B [1/m3]	Tau-Vy Tau-Vz [1/m2]
1.2E-05	-587.0	-1060.7		1.654E+03		1.030E+01	2.058E+01
	587.0	944.8		2.425E+03		1.255E+02	1.135E+01

Section values for warping

Wmin[cm2]	Wmax[cm2]	CM[cm6]	CMS[cm4]	ASwyy[cm6]	ASwzz[cm6]	ry[mm]	rz[mm]
-3970.05	3970.05	3829991693.	5837511.3	-5.21	-145.96	0.0	15.5

Partial cross sections

Mat NoR	A[cm2] It[cm4]	Ay/Az/Ayz [cm2]	Iy/Iz/Iyz [cm4]	ys/zs [mm]	modules [N/mm2]	gam [kN/m]
1	1748.47	607.50	10270397.	0.0	210000	13.73
	14109.6	953.57	398580.9	1052.8	80769	
25	2424.52		86170.2	0.0	10667	6.06
	11138836.	13.51	0.0	1929.8	4444	
210	0.64	0.00	0.0	0.0	200000	0.00
	2.2	0.00	0.0	1983.0	76923	

Design values of cross section

Mat NoR	A[cm2] It[cm4]	Ay/Az/Ayz [cm2]	Iy/Iz/Iyz [cm4]	ys/zs [mm]	modules [N/mm2]	gam [kN/m]
1	1843.50	607.50	10967521.	0.0	182609	19.79
	6270.0	954.14	398580.9	1098.0	70234	

Design forces and moments
(C/E = characteristic plastic/elastic, D=plast.Design, F=elast. Design)

	N[kN]	Vy[kN]	Vz[kN]	Mt[kNm]	My[kNm]	Mz[kNm]	y[mm]	z[mm]	BUCK
C	58605.9	14118.33	24180.12	3185.86	40708.29	6468.53	2.2	1054.	c c
C	-1988.2				40765.02	0.00	0.0	1111.	COMB
C	-3636.8				0.00	6456.98	0.0	0.0	COMB
C	-65879.4	14118.33	24180.12	3185.86	-46321.2	-6452.31	-2.2	1262.	
C	-5285.3				-46722.1	0.00	0.0	1111.	COMB
C	-3636.8				0.00	-6456.98	0.0	0.0	COMB
E	62719.8	9399.84	17046.03	1601.55	35258.46	3296.90	0.0	1111.	
E	-62719.8	9399.84	17046.03	1601.55	-35258.5	-3296.90	0.0	1111.	
D	50961.6	12276.81	20214.51	2293.85	35398.52	5405.54	2.0	1054.	
D	-1728.9				35447.85	0.00	0.0	1111.	COMB
D	-2424.5				0.00	5398.20	0.0	0.0	COMB
D	-55810.7	12276.81	20214.51	2293.85	-39258.6	-5395.75	-2.0	1214.	
D	-3120.1				-39419.2	0.00	0.0	1111.	COMB
D	-2424.5				0.00	-5398.20	0.0	0.0	COMB

SOFiSTiK AG - www.sofistik.de

Composite bridge 38+50+38, b=14.25m, 2x2HL1100R HISTAR460 , slab 0.30m C30/37

Design forces and moments
(C/E = characteristic plastic/elastic, D=plast.Design, F=elast. Design)

	N[kN]	Vy[kN]	Vz[kN]	Mt[kNm]	My[kNm]	Mz[kNm]	y[mm]	z[mm]	BUCK
F	54538.9	8173.78	14822.64	1067.70	30659.53	2866.87	0.0	1111.	
F	-54538.9	8173.78	14822.64	1067.70	-30659.5	-2866.87	0.0	1111.	

Additional Design Data

M	periphery-O/-I [m2/m]	[m2/m]	deff [mm]	t-min [mm]	t-max [mm]	SMP [o/o]	thet-p [tm2/m]	thet-y [tm2/m]	thet-z [tm2/m]	thet-yz [tm2/m]
	7.578		49.4	32.0	206.5	0.0	1.163	1.132	0.031	
1	7.161		48.8	45.0	52.0	0.0	0.838	0.806	0.031	
25	0.413		1174.0			0.0	0.002	0.002		
**	0.004		32.0			0.0	0.000	0.000	0.000	

Cross section No. 372.5 = CS 30 - in-situ conc:C3

Cross section No. 373 - VFT (353)

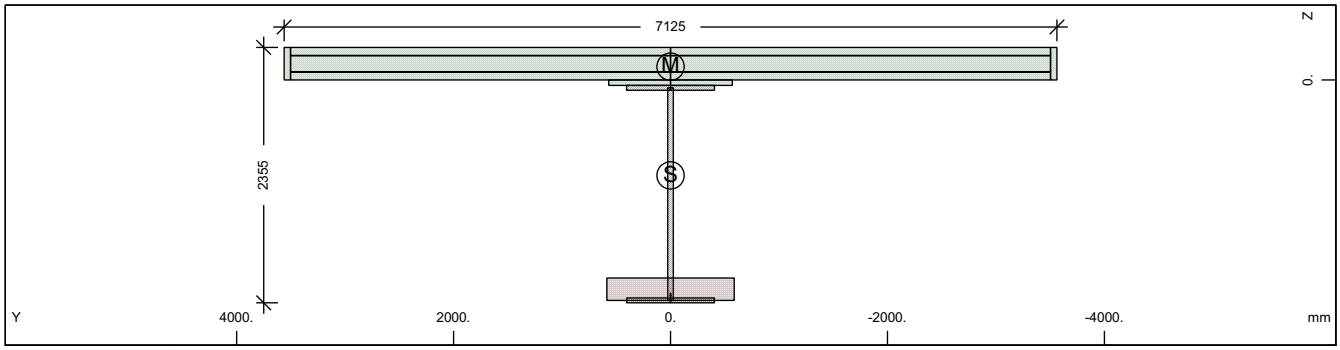

Cross section No. 373 - VFT (353)

Static properties of cross section

Mat NoR	A[cm2] It[cm4]	Ay/Az/Ayz [cm2]	Iy/Iz/Iyz [cm4]	ys/zs [mm]	y/z-sc [mm]	modules [N/mm2]	gam [kN/m]
1	2291.25	365.52	16629855.	0.0	0.0	210000	74.65
	6270.0	634.31	17540740.	880.2	-122.7	80769	

Additional static properties of cross section

Alfa-T [1/°K]	ymin ymax [mm]	zmin zmax [mm]	hymin hzmin [mm]	AK AB [cm2]	MB	Tau-T Tau-B [1/m3]	Tau-Vy Tau-Vz [1/m2]
1.2E-05	-3562.5	-1180.2		1.653E+03		1.030E+01	3.332E+01
	3562.5	1175.3		2.437E+04		1.255E+02	2.217E+01

Section values for warping

Wmin[cm2]	Wmax[cm2]	CM[cm6]	CMS[cm4]	ASwyy[cm6]	ASwzz[cm6]	ry[mm]	rz[mm]
-8730.44	8730.44	1.043E+10	1820467.1	-213.71	-202.62	0.0	1080.1

Partial cross sections

Mat NoR	A[cm2] It[cm4]	Ay/Az/Ayz [cm2]	Iy/Iz/Iyz [cm4]	ys/zs [mm]	modules [N/mm2]	gam [kN/m]
1	1748.46	0.11	10270108.	0.0	210000	13.73
	14109.5	365.35	398580.9	1052.7	80769	
25	2424.24		86140.4	0.0	10667	6.06
	11137550.	4.48	0.0	1929.7	4444	
210	0.64	0.00	0.0	0.0	200000	0.00
	2.2	0.00	0.0	1983.0	76923	
31	21945.00	16985.35	170028.4	0.0	0	54.86
	6417251.4	11901.65	904880243.	-145.5	0	
300	440.00	383.68	24750.0	0.0	200000	0.00
	14.5	281.63	17999263.	-150.0	76923	

SOFiSTiK AG - www.sofistik.de

Composite bridge 38+50+38, b=14.25m, 2x2HL1100R HISTAR460 , slab 0.30m C30/37

Design values of cross section

Mat NoR	A[cm2] It[cm4]	Ay/Az/Ayz [cm2]	Iy/Iz/Iyz [cm4]	ys/zs [mm]	modules [N/mm2]	gam [kN/m]
1	2262.52	365.52	16308294.	0.0	182609	74.65
	6270.0	633.75	17540740.	866.8	70234	

Design forces and moments
(C/E = characteristic plastic/elastic, D=plast.Design, F=elast. Design)

	N[kN]	Vy[kN]	Vz[kN]	Mt[kNm]	My[kNm]	Mz[kNm]	y[mm]	z[mm]	BUCK
C	80605.4	63029.25	52979.86	101772.6	73306.28	102075.7	28.5	-129.	c c
C	-81789.8				131416.6	0.00	0.0	880.2	COMB
C	-36553.9				0.00	102346.7	0.0	0.0	COMB
C	-146594.	63029.25	52979.86	101772.5	-70447.0	-101869.	-28.5	631.1	
C	8682.1				-71528.8	0.00	0.0	880.2	COMB
C	-36553.9				0.00	-102347.	0.0	0.0	COMB
E	76756.9	8664.68	13019.70	1601.41	47399.18	26287.25	0.0	880.2	
E	-76756.9	8664.68	13019.70	1601.41	-47399.2	-26287.2	0.0	880.2	
D	70091.7	47461.25	39950.51	68035.87	62539.75	76995.98	20.1	-73.5	
D	-57763.7				100575.3	0.00	0.0	880.2	COMB
D	-24369.2				0.00	77143.37	0.0	0.0	COMB
D	-114084.	47461.25	39950.51	68035.87	-59305.8	-76898.6	-20.1	582.3	
D	9025.2				-60650.2	0.00	0.0	880.2	COMB
D	-24369.2				0.00	-77143.4	0.0	0.0	COMB
F	66745.2	7534.50	11321.48	1067.60	41216.68	22858.48	0.0	880.2	
F	-66745.2	7534.50	11321.48	1067.60	-41216.7	-22858.5	0.0	880.2	

Additional Design Data

M	periphery-O/-I [m2/m]	[m2/m]	deff [mm]	t-min [mm]	t-max [mm]	SMP [o/o]	thet-p [tm2/m]	thet-y [tm2/m]	thet-z [tm2/m]	thet-yz [tm2/m]
	52.133		8.8	3.1	300.0	0.0	26.918	4.265	22.653	
1	7.161		48.8	45.0	52.0	0.0	0.837	0.806	0.031	
25	0.413		1174.0			0.0	0.002	0.002		
**	0.004		32.0			0.0	0.000	0.000	0.000	
31	16.530		265.5	50.0	300.0	0.0	22.626	0.004	22.622	
**	28.025		3.1	3.1	3.1	0.0	0.000	0.000	0.000	

Cross section No. 373.1 = CS 1 - steel alone

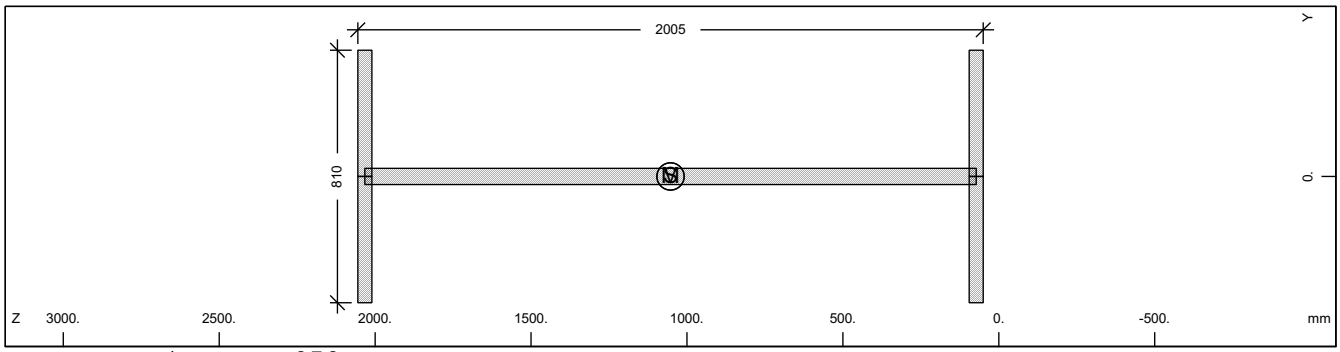

Cross section No. 373

Static properties of cross section

Mat NoR	A[cm2] It[cm4]	Ay/Az/Ayz [cm2]	Iy/Iz/Iyz [cm4]	ys/zs [mm]	modules [N/mm2]	gam [kN/m]
1	1748.46	607.50	10270108.	0.0	210000	13.73
	6270.0	964.27	398580.9	1052.7	80769	

Additional static properties of cross section

Alfa-T [1/°K]	ymin ymax [mm]	zmin zmax [mm]	hymin hzmin [mm]	AK AB [cm2]	MB	Tau-T Tau-B [1/m3]	Tau-Vy Tau-Vz [1/m2]
1.2E-05	-405.0	-1002.7		1.044E+03		3.685E+02	2.058E+01
	405.0	1002.7				1.255E+02	1.137E+01

SOFiSTiK AG - www.sofistik.de

Composite bridge 38+50+38, b=14.25m, 2x2HL1100R HISTAR460 , slab 0.30m C30/37

Section values for warping

Wmin[cm2]	Wmax[cm2]	CM[cm6]	CMS[cm4]	ASwyy[cm6]	ASwzz[cm6]	ry[mm]	rz[mm]
-3970.00	3970.00	3829898794.	5837369.4	0.13	3.30	0.0	0.0

Design values of cross section

Mat NoR	A[cm2] It[cm4]	Ay/Az/Ayz [cm2]	Iy/Iz/Iyz [cm4]	ys/zs [mm]	modules [N/mm2]	gam [kN/m]
1	1748.46	607.50	10270108.	0.0	182609	13.73
	6270.0	964.27	398580.9	1052.7	70234	

Design forces and moments
(C/E = characteristic plastic/elastic, D=plast.Design, F=elast. Design)

	N[kN]	Vy[kN]	Vz[kN]	Mt[kNm]	My[kNm]	Mz[kNm]	y[mm]	z[mm]	BUCK
C	58573.3	14099.76	19717.55	829.90	40677.70	5389.33	0.0	1053.	c c
C	0.0				0.00	0.00	0.0	0.0	COMB
E	58573.3	9399.84	17013.00	524.80	34310.61	3296.90	0.0	1053.	
D	50933.3	12260.66	17145.70	721.65	35371.91	4686.37	0.0	1053.	
D	0.0				0.00	0.00	0.0	0.0	COMB
F	50933.3	8173.78	14793.92	456.34	29835.31	2866.87	0.0	1053.	

Additional Design Data

M	periphery-O/-I [m2/m]	[m2/m]	deff [mm]	t-min [mm]	t-max [mm]	SMP [o/o]	thet-p [tm2/m]	thet-y [tm2/m]	thet-z [tm2/m]	thet-yz [tm2/m]
	7.161		48.8	45.0	52.0	0.0	0.837	0.806	0.031	

Cross section No. 373.2 = CS 10 - prefab. slab C1

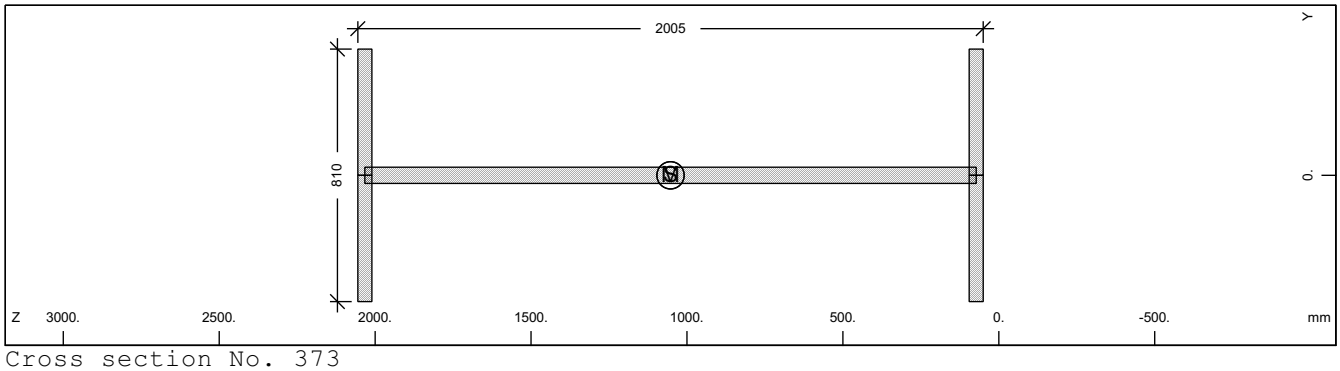

Cross section No. 373

Static properties of cross section

Mat NoR	A[cm2] It[cm4]	Ay/Az/Ayz [cm2]	Iy/Iz/Iyz [cm4]	ys/zs [mm]	modules [N/mm2]	gam [kN/m]
1	1748.46	607.50	10270108.	0.0	210000	13.73
	6270.0	964.27	398580.9	1052.7	80769	

Additional static properties of cross section

Alfa-T [1/°K]	ymin ymax [mm]	zmin zmax [mm]	hymin hzmin [mm]	AK AB [cm2]	MB	Tau-T Tau-B [1/m3]	Tau-Vy Tau-Vz [1/m2]
1.2E-05	-405.0	-1002.7		1.044E+03		3.685E+02	2.058E+01
	405.0	1002.7				1.255E+02	1.137E+01

Section values for warping

Wmin[cm2]	Wmax[cm2]	CM[cm6]	CMS[cm4]	ASwyy[cm6]	ASwzz[cm6]	ry[mm]	rz[mm]
-3970.00	3970.00	3829898794.	5837369.4	0.13	3.30	0.0	0.0

Design values of cross section

Mat NoR	A[cm2] It[cm4]	Ay/Az/Ayz [cm2]	Iy/Iz/Iyz [cm4]	ys/zs [mm]	modules [N/mm2]	gam [kN/m]
1	1748.46	607.50	10270108.	0.0	182609	13.73
	6270.0	964.27	398580.9	1052.7	70234	

SOFiSTiK AG - www.sofistik.de

Composite bridge 38+50+38, b=14.25m, 2x2HL1100R HISTAR460 , slab 0.30m C30/37

Design forces and moments
(C/E = characteristic plastic/elastic, D=plast.Design, F=elast. Design)

	N[kN]	Vy[kN]	Vz[kN]	Mt[kNm]	My[kNm]	Mz[kNm]	y[mm]	z[mm]	BUCK
C	58573.3	14099.76	19717.55	829.90	40677.70	5389.33	0.0	1053.	c c
C	0.0				0.00	0.00	0.0	0.0	COMB
E	58573.3	9399.84	17013.00	524.80	34310.61	3296.90	0.0	1053.	
D	50933.3	12260.66	17145.70	721.65	35371.91	4686.37	0.0	1053.	
D	0.0				0.00	0.00	0.0	0.0	COMB
F	50933.3	8173.78	14793.92	456.34	29835.31	2866.87	0.0	1053.	

Additional Design Data

M	periphery-O/-I [m2/m]	[m2/m]	deff [mm]	t-min [mm]	t-max [mm]	SMP [o/o]	thet-p [tm2/m]	thet-y [tm2/m]	thet-z [tm2/m]	thet-yz [tm2/m]
	7.161		48.8	45.0	52.0	0.0	0.837	0.806	0.031	

Cross section No. 373.3 = CS 20 - in-situ conc:C2

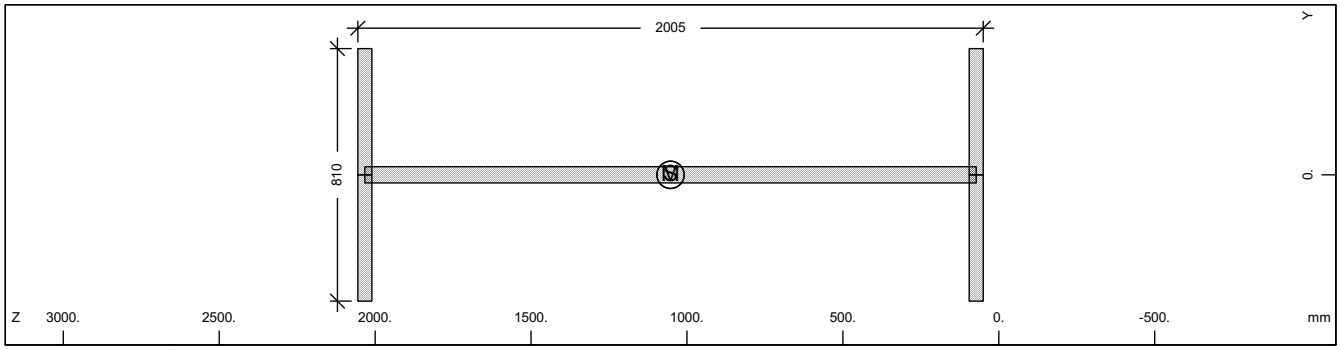

Cross section No. 373

Static properties of cross section

Mat NoR	A[cm2] It[cm4]	Ay/Az/Ayz [cm2]	Iy/Iz/Iyz [cm4]	ys/zs [mm]	modules [N/mm2]	gam [kN/m]
1	1748.46	607.50	10270108.	0.0	210000	13.73
	6270.0	964.27	398580.9	1052.7	80769	

Additional static properties of cross section

Alfa-T [1/°K]	ymin ymax [mm]	zmin zmax [mm]	hymin hzmin [mm]	AK AB [cm2]	MB	Tau-T Tau-B [1/m3]	Tau-Vy Tau-Vz [1/m2]
1.2E-05	-405.0	-1002.7		1.044E+03		3.685E+02	2.058E+01
	405.0	1002.7				1.255E+02	1.137E+01

Section values for warping

Wmin[cm2]	Wmax[cm2]	CM[cm6]	CMS[cm4]	ASwyy[cm6]	ASwzz[cm6]	ry[mm]	rz[mm]
-3970.00	3970.00	3829898794.	5837369.4	0.13	3.30	0.0	0.0

Design values of cross section

Mat NoR	A[cm2] It[cm4]	Ay/Az/Ayz [cm2]	Iy/Iz/Iyz [cm4]	ys/zs [mm]	modules [N/mm2]	gam [kN/m]
1	1748.46	607.50	10270108.	0.0	182609	13.73
	6270.0	964.27	398580.9	1052.7	70234	

Design forces and moments
(C/E = characteristic plastic/elastic, D=plast.Design, F=elast. Design)

	N[kN]	Vy[kN]	Vz[kN]	Mt[kNm]	My[kNm]	Mz[kNm]	y[mm]	z[mm]	BUCK
C	58573.3	14099.76	19717.55	829.90	40677.70	5389.33	0.0	1053.	c c
C	0.0				0.00	0.00	0.0	0.0	COMB
E	58573.3	9399.84	17013.00	524.80	34310.61	3296.90	0.0	1053.	
D	50933.3	12260.66	17145.70	721.65	35371.91	4686.37	0.0	1053.	
D	0.0				0.00	0.00	0.0	0.0	COMB
F	50933.3	8173.78	14793.92	456.34	29835.31	2866.87	0.0	1053.	

SOFiSTiK AG - www.sofistik.de

Composite bridge 38+50+38, b=14.25m, 2x2HL1100R HISTAR460 , slab 0.30m C30/37

Additional Design Data

M	periphery-O/-I [m2/m]	[m2/m]	deff [mm]	t-min [mm]	t-max [mm]	SMP [o/o]	thet-p [tm2/m]	thet-y [tm2/m]	thet-z [tm2/m]	thet-yz [tm2/m]
	7.161		48.8	45.0	52.0	0.0	0.837	0.806	0.031	

Cross section No. 373.4 = CS 21 - reinf active:C2

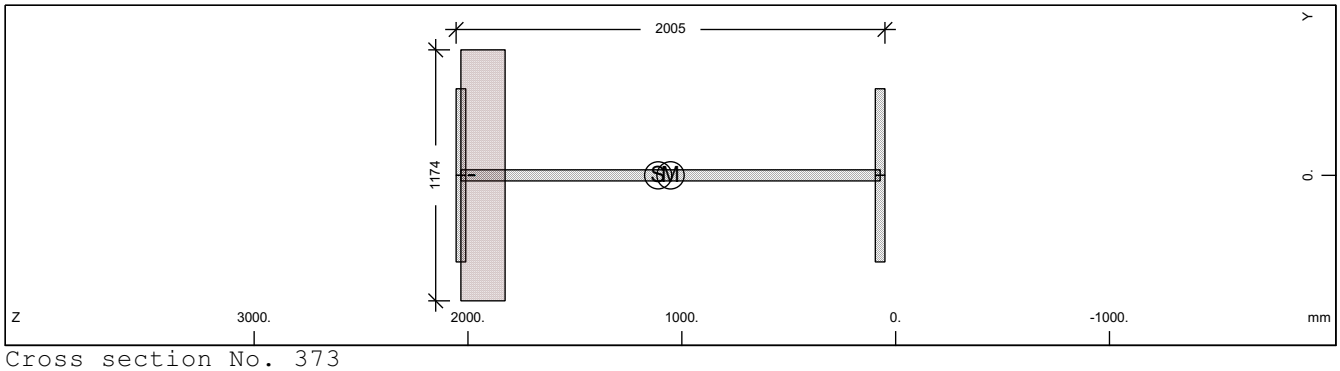

Cross section No. 373

Static properties of cross section

Mat NoR	A[cm2] It[cm4]	Ay/Az/Ayz [cm2]	Iy/Iz/Iyz [cm4]	ys/zs [mm]	modules [N/mm2]	gam [kN/m]
1	1872.21	607.50	11163908.	0.0	210000	19.79
	6270.0	954.30	398580.9	1110.7	80769	

Additional static properties of cross section

Alfa-T [1/°K]	ymin ymax [mm]	zmin zmax [mm]	hymin hzmin [mm]	AK AB [cm2]	MB	Tau-T Tau-B [1/m3]	Tau-Vy Tau-Vz [1/m2]
1.2E-05	-587.0	-1060.7		1.653E+03		1.030E+01	2.058E+01
	587.0	944.8		2.424E+03		1.255E+02	1.135E+01

Section values for warping

Wmin[cm2]	Wmax[cm2]	CM[cm6]	CMS[cm4]	ASwyy[cm6]	ASwzz[cm6]	ry[mm]	rz[mm]
-3970.00	3970.00	3829898561.	5837369.0	-5.23	-146.48	0.0	15.5

Partial cross sections

Mat NoR	A[cm2] It[cm4]	Ay/Az/Ayz [cm2]	Iy/Iz/Iyz [cm4]	ys/zs [mm]	modules [N/mm2]	gam [kN/m]
1	1748.46	607.50	10270108.	0.0	210000	13.73
	14109.5	953.56	398580.9	1052.7	80769	
25	2424.24		86140.4	0.0	10667	6.06
	11137550.	13.51	0.0	1929.7	4444	
210	0.64	0.00	0.0	0.0	200000	0.00
	2.2	0.00	0.0	1983.0	76923	

Design values of cross section

Mat NoR	A[cm2] It[cm4]	Ay/Az/Ayz [cm2]	Iy/Iz/Iyz [cm4]	ys/zs [mm]	modules [N/mm2]	gam [kN/m]
1	1843.47	607.50	10967155.	0.0	182609	19.79
	6270.0	954.13	398580.9	1098.0	70234	

Design forces and moments
(C/E = characteristic plastic/elastic, D=plast.Design, F=elast. Design)

	N[kN]	Vy[kN]	Vz[kN]	Mt[kNm]	My[kNm]	Mz[kNm]	y[mm]	z[mm]	BUCK
C	58605.5	14118.33	24179.42	3185.58	40707.59	6468.40	2.2	1054.	c c
C	-1988.0				40764.31	0.00	0.0	1111.	COMB
C	-3636.4				0.00	6456.86	0.0	0.0	COMB
C	-65878.2	14118.33	24179.42	3185.58	-46320.0	-6452.18	-2.2	1262.	
C	-5284.7				-46720.8	0.00	0.0	1111.	COMB
C	-3636.4				0.00	-6456.86	0.0	0.0	COMB
E	62718.9	9399.84	17045.84	1601.37	35257.82	3296.90	0.0	1111.	
E	-62718.9	9399.84	17045.84	1601.37	-35257.8	-3296.90	0.0	1111.	
D	50961.3	12276.81	20213.99	2293.67	35397.91	5405.45	2.0	1054.	

SOFiSTiK AG - www.sofistik.de

Composite bridge 38+50+38, b=14.25m, 2x2HL1100R HISTAR460 , slab 0.30m C30/37

Design forces and moments
(C/E = characteristic plastic/elastic, D=plast.Design, F=elast. Design)

	N[kN]	Vy[kN]	Vz[kN]	Mt[kNm]	My[kNm]	Mz[kNm]	y[mm]	z[mm]	BUCK
D	-1728.7				35447.23	0.00	0.0	1111.	COMB
D	-2424.2				0.00	5398.11	0.0	0.0	COMB
D	-55809.7	12276.81	20213.99	2293.67	-39257.6	-5395.66	-2.0	1214.	
D	-3119.7				-39418.2	0.00	0.0	1111.	COMB
D	-2424.2				0.00	-5398.11	0.0	0.0	COMB
F	54538.1	8173.78	14822.47	1067.58	30658.97	2866.87	0.0	1111.	
F	-54538.1	8173.78	14822.47	1067.58	-30659.0	-2866.87	0.0	1111.	

Additional Design Data

M	periphery-O/-I [m2/m]	[m2/m]	deff [mm]	t-min [mm]	t-max [mm]	SMP [o/o]	thet-p [tm2/m]	thet-y [tm2/m]	thet-z [tm2/m]	thet-yz [tm2/m]
	7.578		49.4	32.0	206.5	0.0	1.163	1.132	0.031	
1	7.161		48.8	45.0	52.0	0.0	0.837	0.806	0.031	
25	0.413		1174.0			0.0	0.002	0.002		
**	0.004		32.0			0.0	0.000	0.000	0.000	

Cross section No. 373.5 = CS 30 - in-situ conc:C3

Cross section No. 374 - VFT (353)

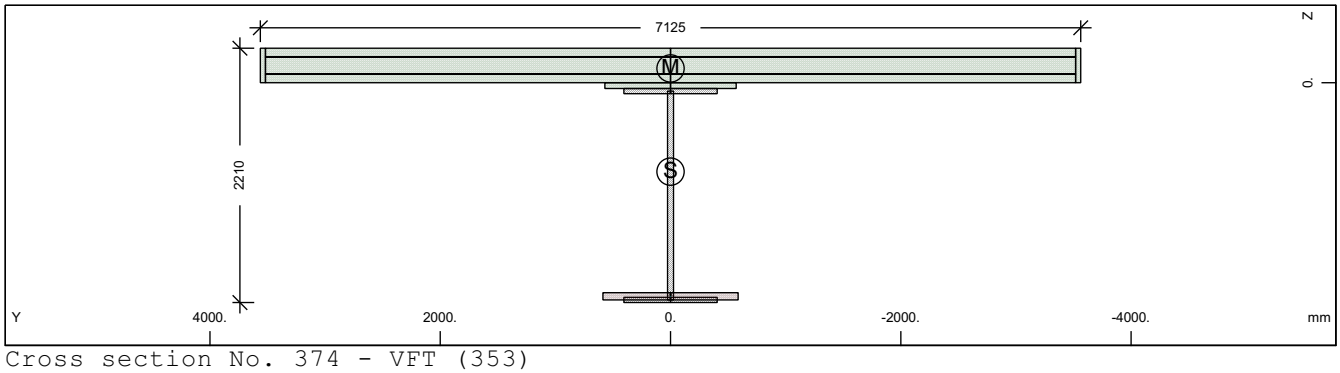

Cross section No. 374 - VFT (353)

Static properties of cross section

Mat NoR	A[cm2] It[cm4]	Ay/Az/Ayz [cm2]	Iy/Iz/Iyz [cm4]	ys/zs [mm]	y/z-sc [mm]	modules [N/mm2]	gam [kN/m]
1	2131.85	366.87	13364576.	0.0	0.0	210000	69.85
	6270.0	555.48	17761147.	772.6	-124.6	80769	

Additional static properties of cross section

Alfa-T [1/°K]	ymin ymax [mm]	zmin zmax [mm]	hymin hzmin [mm]	AK AB [cm2]	MB	Tau-T Tau-B [1/m3]	Tau-Vy Tau-Vz [1/m2]
1.2E-05	-3562.5	-1072.6		5.316E+02		3.204E+01	3.318E+01
	3562.5	1137.1		2.269E+04		1.255E+02	2.501E+01

Section values for warping

Wmin[cm2]	Wmax[cm2]	CM[cm6]	CMS[cm4]	ASwyy[cm6]	ASwzz[cm6]	ry[mm]	rz[mm]
-8147.61	8147.61	9231312237.	1438967.1	-97.60	-73.44	0.0	797.2

Partial cross sections

Mat NoR	A[cm2] It[cm4]	Ay/Az/Ayz [cm2]	Iy/Iz/Iyz [cm4]	ys/zs [mm]	modules [N/mm2]	gam [kN/m]
1	1672.60	0.11	8590373.4	0.0	210000	13.13
	13425.7	295.96	398580.9	979.8	80769	
25	744.27		2492.7	0.0	10667	1.86
	3419359.4	0.17	0.0	1855.4	4444	
210	0.64	0.00	0.0	0.0	200000	0.00
	2.2	0.00	0.0	1837.1	76923	
31	21945.00	16689.05	170028.4	0.0	0	54.86
	6417251.4	11333.76	904880243.	-145.5	0	

SOFiSTiK AG - www.sofistik.de

Composite bridge 38+50+38, b=14.25m, 2x2HL1100R HISTAR460 , slab 0.30m C30/37

300	441.88	385.10	24855.6	0.0	200000	0.00
	14.5	271.99	18230690.	-150.0	76923	

Design values of cross section

Mat	A[cm2]	Ay/Az/Ayz	Iy/Iz/Iyz	ys/zs	modules	gam
NoR	It[cm4]	[cm2]	[cm4]	[mm]	[N/mm2]	[kN/m]
1	2123.03	366.87	13260683.	0.0	182609	69.85
	6270.0	555.00	17761146.	768.1	70234	

Design forces and moments
(C/E = characteristic plastic/elastic, D=plast.Design, F=elast. Design)

	N[kN]	Vy[kN]	Vz[kN]	Mt[kNm]	My[kNm]	Mz[kNm]	y[mm]	z[mm]	BUCK
C	78158.0	63083.46	48740.70	100107.4	66244.77	101523.9	30.3	-66.0	c c
C	-80676.0				118099.9	0.00	0.0	772.6	COMB
C	-34033.9				0.00	101903.7	0.0	0.0	COMB
C	-140901.	63083.46	48740.70	100107.4	-57799.5	-101456.	-30.3	410.8	
C	12608.1				-60080.9	0.00	0.0	772.6	COMB
C	-34033.9				0.00	-101904.	0.0	0.0	COMB
E	71416.9	8699.14	11542.70	514.91	39374.67	26504.45	0.0	772.6	
E	-71416.9	8699.14	11542.70	514.91	-39374.7	-26504.4	0.0	772.6	
D	67963.5	47508.38	36826.70	66918.02	56498.67	76709.41	20.2	-73.9	
D	-56795.2				90433.05	0.00	0.0	772.6	COMB
D	-22689.3				0.00	76908.18	0.0	0.0	COMB
D	-109792.	47508.38	36826.70	66918.02	-49602.6	-76679.4	-20.2	395.8	
D	11416.6				-51753.7	0.00	0.0	772.6	COMB
D	-22689.3				0.00	-76908.2	0.0	0.0	COMB
F	62101.7	7564.47	10037.13	343.27	34238.84	23047.35	0.0	772.6	
F	-62101.7	7564.47	10037.13	343.27	-34238.8	-23047.3	0.0	772.6	

Additional Design Data

M	periphery-O/-I		deff	t-min	t-max	SMP	thet-p	thet-y	thet-z	thet-yz
	[m2/m]	[m2/m]	[mm]	[mm]	[mm]	[o/o]	[tm2/m]	[tm2/m]	[tm2/m]	[tm2/m]
	51.675		8.3	3.1	300.0	0.0	25.250	2.596	22.653	
1	6.869		48.7	45.0	52.0	0.0	0.706	0.674	0.031	
25	0.127		1174.0			0.0	0.000	0.000		
**	0.004		32.0			0.0	0.000		0.000	
31	16.530		265.5	50.0	300.0	0.0	22.626	0.004	22.622	
**	28.145		3.1	3.1	3.1	0.0	0.000	0.000	0.000	

Cross section No. 374.1 = CS 1 - steel alone

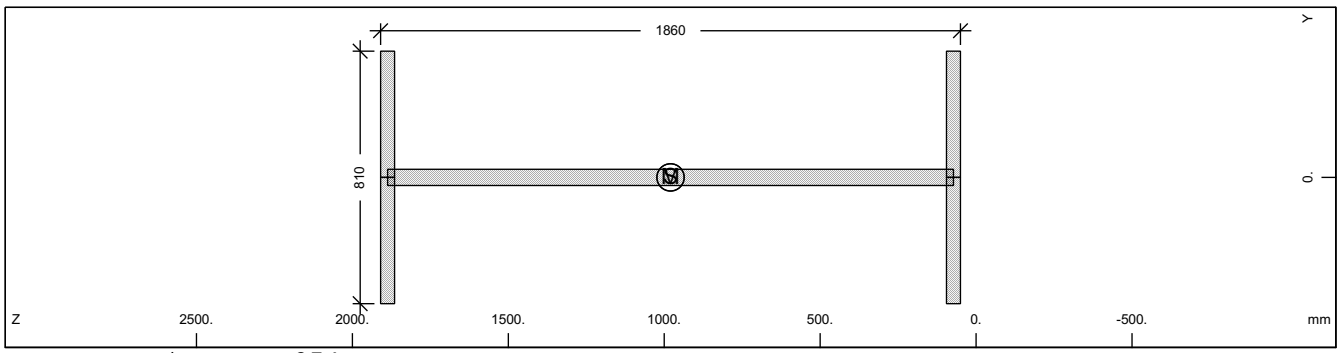

Cross section No. 374

Static properties of cross section

Mat	A[cm2]	Ay/Az/Ayz	Iy/Iz/Iyz	ys/zs	modules	gam
NoR	It[cm4]	[cm2]	[cm4]	[mm]	[N/mm2]	[kN/m]
1	1672.60	607.50	8590373.4	0.0	210000	13.13
	6270.0	890.08	398580.9	979.8	80769	

SOFiSTiK AG - www.sofistik.de

Composite bridge 38+50+38, b=14.25m, 2x2HL1100R HISTAR460 , slab 0.30m C30/37

Additional static properties of cross section

Alfa-T	ymin ymax	zmin zmax	hymin hzmin	AK AB	MB	Tau-T Tau-B	Tau-Vy Tau-Vz
[1/°K]	[mm]	[mm]	[mm]	[cm2]		[1/m3]	[1/m2]
1.2E-05	-405.0	-929.8		9.930E+02		3.873E+02	2.058E+01
	405.0	929.8				1.255E+02	1.219E+01

Section values for warping

Wmin[cm2]	Wmax[cm2]	CM[cm6]	CMS[cm4]	ASwyy[cm6]	ASwzz[cm6]	ry[mm]	rz[mm]
-3674.58	3674.583281123484.	5000949.3		-0.54	-11.67	0.0	0.0

Design values of cross section

Mat NoR	A[cm2] It[cm4]	Ay/Az/Ayz [cm2]	Iy/Iz/Iyz [cm4]	ys/zs [mm]	modules [N/mm2]	gam [kN/m]
1	1672.60	607.50	8590373.4	0.0	182609	13.13
	6270.0	890.08	398580.9	979.8	70234	

Design forces and moments
(C/E = characteristic plastic/elastic, D=plast.Design, F=elast. Design)

	N[kN]	Vy[kN]	Vz[kN]	Mt[kNm]	My[kNm]	Mz[kNm]	y[mm]	z[mm]	BUCK
C	56032.0	14099.76	18250.33	791.75	36497.91	5356.29	0.0	979.8	c c
C	0.0				0.00	0.00	0.0	0.0	COMB
E	56032.0	9399.84	15860.11	499.36	30950.32	3296.90	0.0	979.8	
D	48723.5	12260.66	15869.85	688.48	31737.31	4657.64	0.0	979.8	
D	0.0				0.00	0.00	0.0	0.0	COMB
F	48723.5	8173.78	13791.40	434.23	26913.32	2866.87	0.0	979.8	

Additional Design Data

M	periphery-O/-I [m2/m]	[m2/m]	deff [mm]	t-min [mm]	t-max [mm]	SMP [o/o]	thet-p [tm2/m]	thet-y [tm2/m]	thet-z [tm2/m]	thet-yz [tm2/m]
	6.869		48.7	45.0	52.0	0.0	0.706	0.674	0.031	

Cross section No. 374.2 = CS 10 - prefab. slab C1

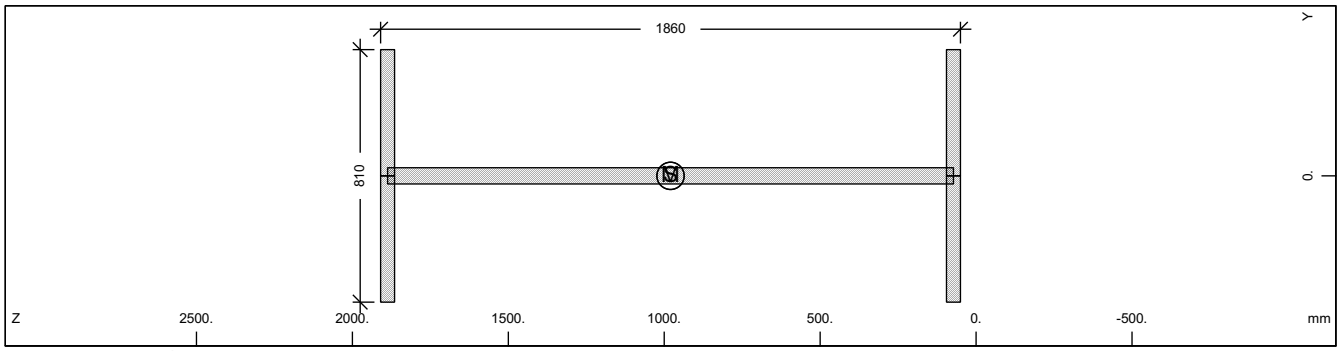

Cross section No. 374

Static properties of cross section

Mat NoR	A[cm2] It[cm4]	Ay/Az/Ayz [cm2]	Iy/Iz/Iyz [cm4]	ys/zs [mm]	modules [N/mm2]	gam [kN/m]
1	1672.60	607.50	8590373.4	0.0	210000	13.13
	6270.0	890.08	398580.9	979.8	80769	

Additional static properties of cross section

Alfa-T	ymin ymax	zmin zmax	hymin hzmin	AK AB	MB	Tau-T Tau-B	Tau-Vy Tau-Vz
[1/°K]	[mm]	[mm]	[mm]	[cm2]		[1/m3]	[1/m2]
1.2E-05	-405.0	-929.8		9.930E+02		3.873E+02	2.058E+01
	405.0	929.8				1.255E+02	1.219E+01

Section values for warping

Wmin[cm2]	Wmax[cm2]	CM[cm6]	CMS[cm4]	ASwyy[cm6]	ASwzz[cm6]	ry[mm]	rz[mm]
-3674.58	3674.583281123484.	5000949.3		-0.54	-11.67	0.0	0.0

SOFiSTiK AG - www.sofistik.de

Composite bridge 38+50+38, b=14.25m, 2x2HL1100R HISTAR460 , slab 0.30m C30/37

Design values of cross section

Mat NoR	A[cm2] It[cm4]	Ay/Az/Ayz [cm2]	Iy/Iz/Iyz [cm4]	ys/zs [mm]	modules [N/mm2]	gam [kN/m]
1	1672.60	607.50	8590373.4	0.0	182609	13.13
	6270.0	890.08	398580.9	979.8	70234	

Design forces and moments
(C/E = characteristic plastic/elastic, D=plast.Design, F=elast. Design)

	N[kN]	Vy[kN]	Vz[kN]	Mt[kNm]	My[kNm]	Mz[kNm]	y[mm]	z[mm]	BUCK
C	56032.0	14099.76	18250.33	791.75	36497.91	5356.29	0.0	979.8	c c
C	0.0				0.00	0.00	0.0	0.0	COMB
E	56032.0	9399.84	15860.11	499.36	30950.32	3296.90	0.0	979.8	
D	48723.5	12260.66	15869.85	688.48	31737.31	4657.64	0.0	979.8	
D	0.0				0.00	0.00	0.0	0.0	COMB
F	48723.5	8173.78	13791.40	434.23	26913.32	2866.87	0.0	979.8	

Additional Design Data

M	periphery-O/-I [m2/m] [m2/m]	deff [mm]	t-min [mm]	t-max [mm]	SMP [o/o]	thet-p [tm2/m]	thet-y [tm2/m]	thet-z [tm2/m]	thet-yz [tm2/m]
	6.869	48.7	45.0	52.0	0.0	0.706	0.674	0.031	

Cross section No. 374.3 = CS 20 - in-situ conc:C2

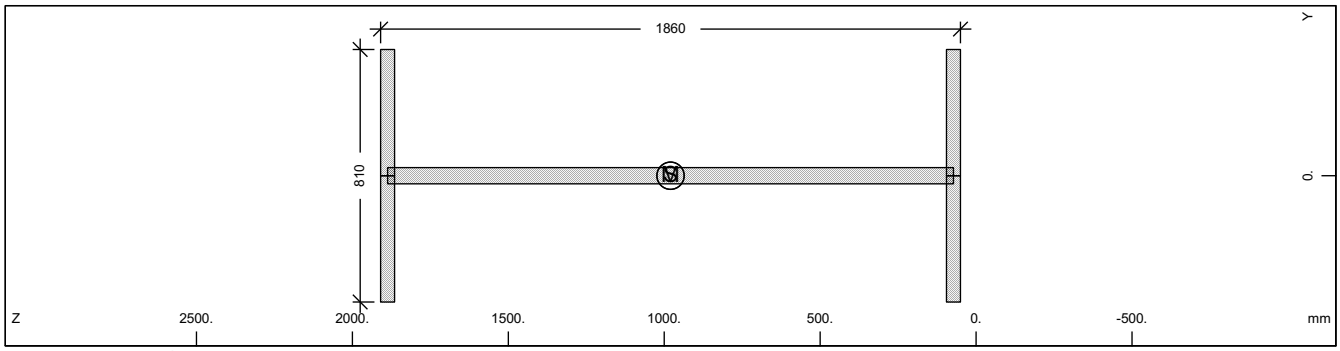

Cross section No. 374

Static properties of cross section

Mat NoR	A[cm2] It[cm4]	Ay/Az/Ayz [cm2]	Iy/Iz/Iyz [cm4]	ys/zs [mm]	modules [N/mm2]	gam [kN/m]
1	1672.60	607.50	8590373.4	0.0	210000	13.13
	6270.0	890.08	398580.9	979.8	80769	

Additional static properties of cross section

Alfa-T [1/°K]	ymin ymax [mm]	zmin zmax [mm]	hymin hzmin [mm]	AK AB [cm2]	MB	Tau-T Tau-B [1/m3]	Tau-Vy Tau-Vz [1/m2]
1.2E-05	-405.0	-929.8		9.930E+02		3.873E+02	2.058E+01
	405.0	929.8				1.255E+02	1.219E+01

Section values for warping

Wmin[cm2]	Wmax[cm2]	CM[cm6]	CMS[cm4]	ASwyy[cm6]	ASwzz[cm6]	ry[mm]	rz[mm]
-3674.58	3674.583281123484.	5000949.3		-0.54	-11.67	0.0	0.0

Design values of cross section

Mat NoR	A[cm2] It[cm4]	Ay/Az/Ayz [cm2]	Iy/Iz/Iyz [cm4]	ys/zs [mm]	modules [N/mm2]	gam [kN/m]
1	1672.60	607.50	8590373.4	0.0	182609	13.13
	6270.0	890.08	398580.9	979.8	70234	

Design forces and moments
(C/E = characteristic plastic/elastic, D=plast.Design, F=elast. Design)

	N[kN]	Vy[kN]	Vz[kN]	Mt[kNm]	My[kNm]	Mz[kNm]	y[mm]	z[mm]	BUCK
C	56032.0	14099.76	18250.33	791.75	36497.91	5356.29	0.0	979.8	c c
C	0.0				0.00	0.00	0.0	0.0	COMB
E	56032.0	9399.84	15860.11	499.36	30950.32	3296.90	0.0	979.8	

SOFiSTiK AG - www.sofistik.de

Composite bridge 38+50+38, b=14.25m, 2x2HL1100R HISTAR460 , slab 0.30m C30/37

Design forces and moments
(C/E = characteristic plastic/elastic, D=plast.Design, F=elast. Design)

	N[kN]	Vy[kN]	Vz[kN]	Mt[kNm]	My[kNm]	Mz[kNm]	y[mm]	z[mm]	BUCK
D	48723.5	12260.66	15869.85	688.48	31737.31	4657.64	0.0	979.8	
D	0.0				0.00	0.00	0.0	0.0	COMB
F	48723.5	8173.78	13791.40	434.23	26913.32	2866.87	0.0	979.8	

Additional Design Data

M	periphery-O/-I [m2/m]	[m2/m]	deff [mm]	t-min [mm]	t-max [mm]	SMP [o/o]	thet-p [tm2/m]	thet-y [tm2/m]	thet-z [tm2/m]	thet-yz [tm2/m]
	6.869		48.7	45.0	52.0	0.0	0.706	0.674	0.031	

Cross section No. 374.4 = CS 21 - reinf active:C2

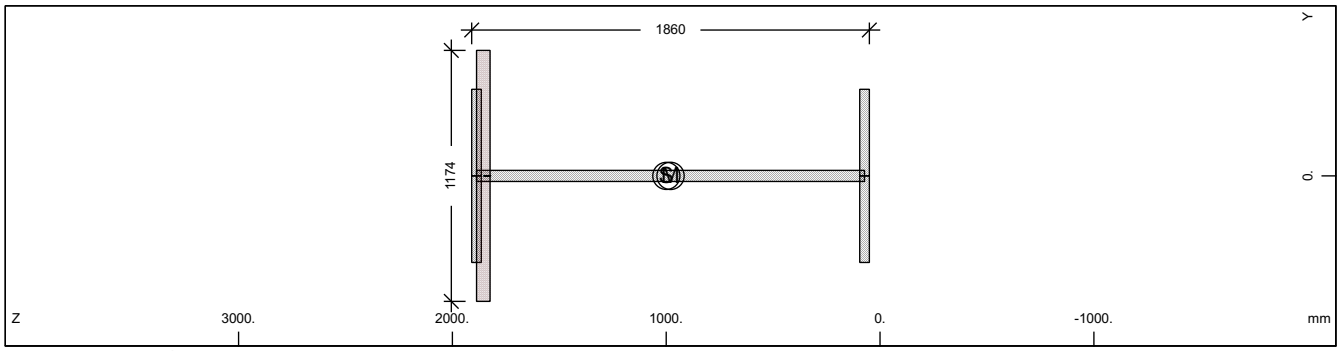

Cross section No. 374

Static properties of cross section

Mat NoR	A[cm2] It[cm4]	Ay/Az/Ayz [cm2]	Iy/Iz/Iyz [cm4]	ys/zs [mm]	modules [N/mm2]	gam [kN/m]
1	1711.01	607.50	8878232.6	0.0	210000	14.99
	6270.0	891.19	398580.9	999.5	80769	

Additional static properties of cross section

Alfa-T [1/°K]	ymin ymax [mm]	zmin zmax [mm]	hymin hzmin [mm]	AK AB [cm2]	MB	Tau-T Tau-B [1/m3]	Tau-Vy Tau-Vz [1/m2]
1.2E-05	-587.0	-949.5		5.316E+02		3.205E+01	2.058E+01
	587.0	910.2		7.443E+02		1.255E+02	1.216E+01

Section values for warping

Wmin[cm2]	Wmax[cm2]	CM[cm6]	CMS[cm4]	ASwyy[cm6]	ASwzz[cm6]	ry[mm]	rz[mm]
-3674.58	3674.583281123484.		5000949.7	-0.78	-17.39	0.0	8.5

Partial cross sections

Mat NoR	A[cm2] It[cm4]	Ay/Az/Ayz [cm2]	Iy/Iz/Iyz [cm4]	ys/zs [mm]	modules [N/mm2]	gam [kN/m]
1	1672.60	607.50	8590373.4	0.0	210000	13.13
	13425.7	891.15	398580.9	979.8	80769	
25	744.27		2492.7	0.0	10667	1.86
	3419359.4	0.62	0.0	1855.4	4444	
210	0.64	0.00	0.0	0.0	200000	0.00
	2.2	0.00	0.0	1837.1	76923	

Design values of cross section

Mat NoR	A[cm2] It[cm4]	Ay/Az/Ayz [cm2]	Iy/Iz/Iyz [cm4]	ys/zs [mm]	modules [N/mm2]	gam [kN/m]
1	1702.19	607.50	8813240.4	0.0	182609	14.99
	6270.0	891.18	398580.9	995.0	70234	

Design forces and moments
(C/E = characteristic plastic/elastic, D=plast.Design, F=elast. Design)

	N[kN]	Vy[kN]	Vz[kN]	Mt[kNm]	My[kNm]	Mz[kNm]	y[mm]	z[mm]	BUCK
C	56064.1	14118.33	19940.25	1520.30	36525.46	5685.70	0.9	980.7	c c
C	-652.6				36531.57	0.00	0.0	999.5	COMB

SOFiSTiK AG - www.sofistik.de

Composite bridge 38+50+38, b=14.25m, 2x2HL1100R HISTAR460 , slab 0.30m C30/37

Design forces and moments
(C/E = characteristic plastic/elastic, D=plast.Design, F=elast. Design)

	N[kN]	Vy[kN]	Vz[kN]	Mt[kNm]	My[kNm]	Mz[kNm]	y[mm]	z[mm]	BUCK
C	-1116.4				0.00	5684.21	0.0	0.0	COMB
C	-58297.0	14118.33	19940.25	1520.30	-38406.9	-5683.61	-0.9	1045.	
C	-1580.2				-38442.8	0.00	0.0	999.5	COMB
C	-1116.4				0.00	-5684.21	0.0	0.0	COMB
E	57318.9	9399.84	15908.65	514.87	31325.35	3296.90	0.0	999.5	
E	-57318.9	9399.84	15908.65	514.87	-31325.3	-3296.90	0.0	999.5	
D	48751.4	12276.81	17090.18	1175.74	31761.27	4876.99	0.7	980.7	
D	-567.4				31766.58	0.00	0.0	999.5	COMB
D	-744.3				0.00	4876.31	0.0	0.0	COMB
D	-50240.0	12276.81	17090.18	1175.74	-33026.7	-4875.96	-0.7	1030.	
D	-921.1				-33040.7	0.00	0.0	999.5	COMB
D	-744.3				0.00	-4876.31	0.0	0.0	COMB
F	49842.6	8173.78	13833.61	343.25	27239.43	2866.87	0.0	999.5	
F	-49842.6	8173.78	13833.61	343.25	-27239.4	-2866.87	0.0	999.5	

Additional Design Data

M	periphery-O/-I [m2/m]	[m2/m]	deff [mm]	t-min [mm]	t-max [mm]	SMP [o/o]	thet-p [tm2/m]	thet-y [tm2/m]	thet-z [tm2/m]	thet-yz [tm2/m]
	7.000		48.9	32.0	63.4	0.0	0.831	0.799	0.031	
1	6.869		48.7	45.0	52.0	0.0	0.706	0.674	0.031	
25	0.127		1174.0			0.0	0.000	0.000		
**	0.004		32.0			0.0	0.000		0.000	

Cross section No. 374.5 = CS 30 - in-situ conc:C3

Cross section No. 375 - VFT (353)

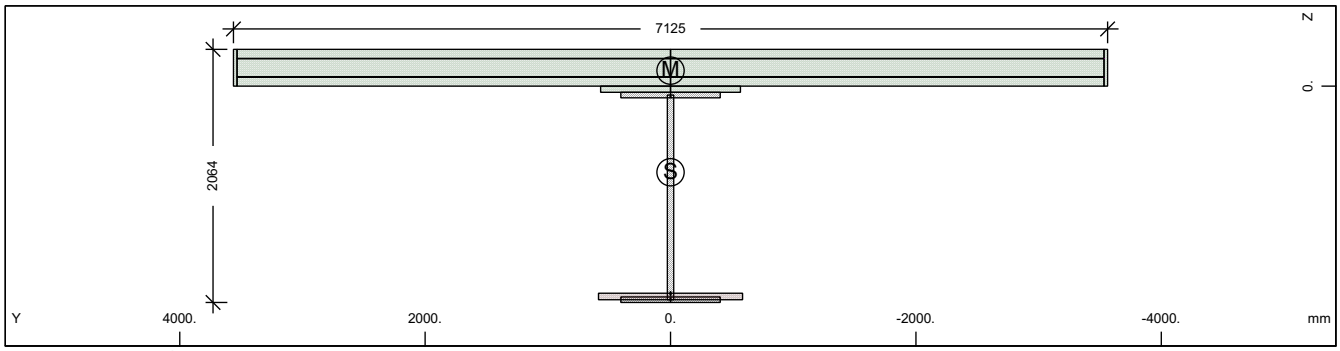

Cross section No. 375 - VFT (353)

Static properties of cross section

Mat NoR	A[cm2] It[cm4]	Ay/Az/Ayz [cm2]	Iy/Iz/Iyz [cm4]	ys/zs [mm]	y/z-sc [mm]	modules [N/mm2]	gam [kN/m]
1	2051.50	368.22	11179625.	0.0	0.0	210000	68.95
	6270.0	483.79	17983471.	701.8	-126.6	80769	

Additional static properties of cross section

Alfa-T [1/°K]	ymin ymax [mm]	zmin zmax [mm]	hymin hzmin [mm]	AK AB [cm2]	MB	Tau-T Tau-B [1/m3]	Tau-Vy Tau-Vz [1/m2]
1.2E-05	-3562.5	-1001.8		4.476E+02		3.806E+01	3.305E+01
	3562.5	1061.9		2.257E+04		1.255E+02	2.789E+01

Section values for warping

Wmin[cm2]	Wmax[cm2]	CM[cm6]	CMS[cm4]	ASwyy[cm6]	ASwzz[cm6]	ry[mm]	rz[mm]
-7564.50	7564.508117049965.		1120143.4	-204.17	-126.93	0.0	517.4

SOFiSTiK AG - www.sofistik.de

Composite bridge 38+50+38, b=14.25m, 2x2HL1100R HISTAR460 , slab 0.30m C30/37

Partial cross sections

Mat NoR	A[cm2] It[cm4]	Ay/Az/Ayz [cm2]	Iy/Iz/Iyz [cm4]	ys/zs [mm]	modules [N/mm2]	gam [kN/m]
1	1596.73	0.11	7088401.2	0.0	210000	12.53
	12741.8	240.63	398580.9	906.9	80769	
25	620.94		1447.5	0.0	10667	1.55
	2852745.4	0.09	0.0	1714.8	4444	
210	0.64	0.00	0.0	0.0	200000	0.00
	2.2	0.00	0.0	1691.2	76923	
31	21945.00	16399.22	170028.4	0.0	0	54.86
	6417251.4	10473.13	904880243.	-145.5	0	
300	443.75	386.52	24961.2	0.0	200000	0.00
	14.6	254.84	18464130.	-150.0	76923	

Design values of cross section

Mat NoR	A[cm2] It[cm4]	Ay/Az/Ayz [cm2]	Iy/Iz/Iyz [cm4]	ys/zs [mm]	modules [N/mm2]	gam [kN/m]
1	2044.14	368.22	11103822.	0.0	182609	68.95
	6270.0	483.34	17983471.	698.1	70234	

Design forces and moments
(C/E = characteristic plastic/elastic, D=plast.Design, F=elast. Design)

	N[kN]	Vy[kN]	Vz[kN]	Mt[kNm]	My[kNm]	Mz[kNm]	y[mm]	z[mm]	BUCK
C	75710.2	63137.67	47069.75	99949.84	59657.41	101738.4	60.4	-75.8	c c
C	-80846.2				107944.6	0.00	0.0	701.8	COMB
C	-33848.9				0.00	102147.4	0.0	0.0	COMB
C	-139878.	63137.67	47069.75	99949.84	-51572.4	-101626.	-60.4	324.6	
C	13148.3				-54053.4	0.00	0.0	701.8	COMB
C	-33848.9				0.00	-102147.	0.0	0.0	COMB
E	68725.3	8733.64	10348.86	433.52	35268.12	26722.64	0.0	701.8	
E	-68725.3	8733.64	10348.86	433.52	-35268.1	-26722.6	0.0	701.8	
D	65834.9	47555.52	35414.98	66805.27	50778.27	76913.23	21.7	-74.2	
D	-56943.2				82547.57	0.00	0.0	701.8	COMB
D	-22565.9				0.00	77131.13	0.0	0.0	COMB
D	-108613.	47555.52	35414.98	66805.27	-44317.7	-76886.3	-21.7	312.1	
D	11811.3				-46620.1	0.00	0.0	701.8	COMB
D	-22565.9				0.00	-77131.1	0.0	0.0	COMB
F	59761.1	7594.47	8999.01	289.02	30667.93	23237.08	0.0	701.8	
F	-59761.1	7594.47	8999.01	289.02	-30667.9	-23237.1	0.0	701.8	

Additional Design Data

M	periphery-O/-I [m2/m]	[m2/m]	deff [mm]	t-min [mm]	t-max [mm]	SMP [o/o]	thet-p [tm2/m]	thet-y [tm2/m]	thet-z [tm2/m]	thet-yz [tm2/m]
	51.482		8.0	3.1	300.0	0.0	24.764	2.111	22.653	
1	6.577		48.6	45.0	52.0	0.0	0.588	0.556	0.031	
25	0.106		1174.0			0.0	0.000	0.000		
**	0.004		32.0			0.0	0.000		0.000	
31	16.530		265.5	50.0	300.0	0.0	22.626	0.004	22.622	
**	28.265		3.1	3.1	3.1	0.0	0.000	0.000	0.000	

SOFiSTiK AG - www.sofistik.de

Composite bridge 38+50+38, b=14.25m, 2x2HL1100R HISTAR460 , slab 0.30m C30/37

Cross section No. 375.1 = CS 1 - steel alone

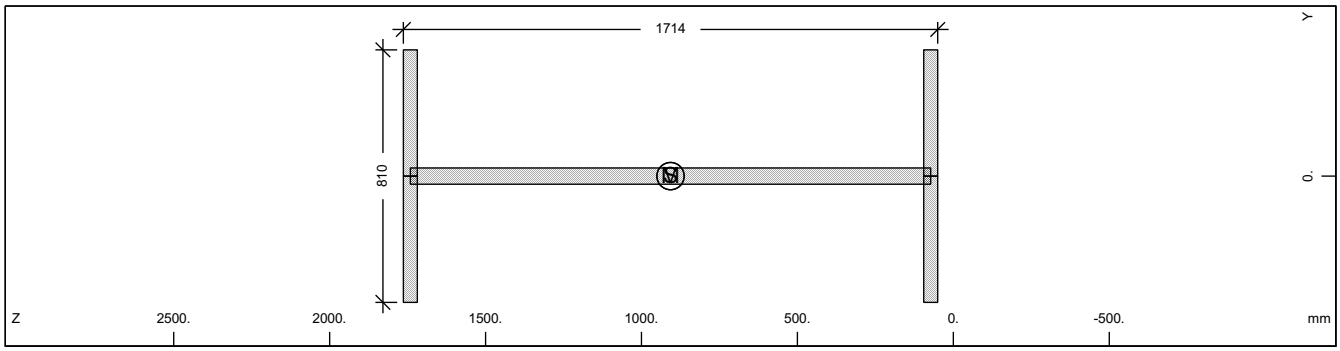

Cross section No. 375

Static properties of cross section

Mat NoR	A[cm2] It[cm4]	Ay/Az/Ayz [cm2]	Iy/Iz/Iyz [cm4]	ys/zs [mm]	modules [N/mm2]	gam [kN/m]
1	1596.73	607.50	7088401.2	0.0	210000	12.53
	6270.0	815.49	398580.9	906.9	80769	

Additional static properties of cross section

Alfa-T [1/°K]	ymin ymax [mm]	zmin zmax [mm]	hymin hzmin [mm]	AK AB [cm2]	MB	Tau-T Tau-B [1/m3]	Tau-Vy Tau-Vz [1/m2]
1.2E-05	-405.0	-856.9		9.424E+02		4.081E+02	2.058E+01
	405.0	856.9				1.255E+02	1.316E+01

Section values for warping

Wmin[cm2]	Wmax[cm2]	CM[cm6]	CMS[cm4]	ASwyy[cm6]	ASwzz[cm6]	ry[mm]	rz[mm]
-3379.12	3379.122774685865.		4229058.7	-1.20	-21.27	0.0	0.0

Design values of cross section

Mat NoR	A[cm2] It[cm4]	Ay/Az/Ayz [cm2]	Iy/Iz/Iyz [cm4]	ys/zs [mm]	modules [N/mm2]	gam [kN/m]
1	1596.73	607.50	7088401.2	0.0	182609	12.53
	6270.0	815.49	398580.9	906.9	70234	

Design forces and moments
(C/E = characteristic plastic/elastic, D=plast.Design, F=elast. Design)

	N[kN]	Vy[kN]	Vz[kN]	Mt[kNm]	My[kNm]	Mz[kNm]	y[mm]	z[mm]	BUCK
C	53490.3	14099.76	16782.87	753.60	32502.88	5323.25	0.0	906.9	c c
C	0.0				0.00	0.00	0.0	0.0	COMB
E	53490.3	9399.84	14695.65	473.93	27713.28	3296.90	0.0	906.9	
D	46513.3	12260.66	14593.80	655.30	28263.38	4628.91	0.0	906.9	
D	0.0				0.00	0.00	0.0	0.0	COMB
F	46513.3	8173.78	12778.83	412.11	24098.51	2866.87	0.0	906.9	

Additional Design Data

M	periphery-O/-I [m2/m] [m2/m]	deff [mm]	t-min [mm]	t-max [mm]	SMP [o/o]	thet-p [tm2/m]	thet-y [tm2/m]	thet-z [tm2/m]	thet-yz [tm2/m]
	6.577	48.6	45.0	52.0	0.0	0.588	0.556	0.031	

SOFiSTiK AG - www.sofistik.de

Composite bridge 38+50+38, b=14.25m, 2x2HL1100R HISTAR460 , slab 0.30m C30/37

Cross section No. 375.2 = CS 10 - prefab. slab C1

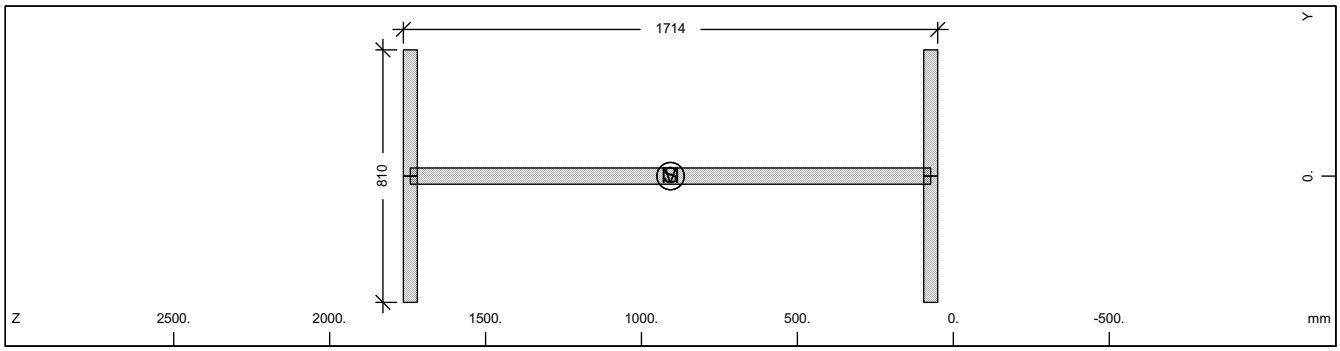

Cross section No. 375

Static properties of cross section

Mat NoR	A[cm2] It[cm4]	Ay/Az/Ayz [cm2]	Iy/Iz/Iyz [cm4]	ys/zs [mm]	modules [N/mm2]	gam [kN/m]
1	1596.73	607.50	7088401.2	0.0	210000	12.53
	6270.0	815.49	398580.9	906.9	80769	

Additional static properties of cross section

Alfa-T [1/°K]	ymin ymax [mm]	zmin zmax [mm]	hymin hzmin [mm]	AK AB [cm2]	MB	Tau-T Tau-B [1/m3]	Tau-Vy Tau-Vz [1/m2]
1.2E-05	-405.0	-856.9		9.424E+02		4.081E+02	2.058E+01
	405.0	856.9				1.255E+02	1.316E+01

Section values for warping

Wmin[cm2]	Wmax[cm2]	CM[cm6]	CMS[cm4]	ASwyy[cm6]	ASwzz[cm6]	ry[mm]	rz[mm]
-3379.12	3379.122774685865.		4229058.7	-1.20	-21.27	0.0	0.0

Design values of cross section

Mat NoR	A[cm2] It[cm4]	Ay/Az/Ayz [cm2]	Iy/Iz/Iyz [cm4]	ys/zs [mm]	modules [N/mm2]	gam [kN/m]
1	1596.73	607.50	7088401.2	0.0	182609	12.53
	6270.0	815.49	398580.9	906.9	70234	

Design forces and moments
(C/E = characteristic plastic/elastic, D=plast.Design, F=elast. Design)

	N[kN]	Vy[kN]	Vz[kN]	Mt[kNm]	My[kNm]	Mz[kNm]	y[mm]	z[mm]	BUCK
C	53490.3	14099.76	16782.87	753.60	32502.88	5323.25	0.0	906.9	c c
C	0.0				0.00	0.00	0.0	0.0	COMB
E	53490.3	9399.84	14695.65	473.93	27713.28	3296.90	0.0	906.9	
D	46513.3	12260.66	14593.80	655.30	28263.38	4628.91	0.0	906.9	
D	0.0				0.00	0.00	0.0	0.0	COMB
F	46513.3	8173.78	12778.83	412.11	24098.51	2866.87	0.0	906.9	

Additional Design Data

M	periphery-O/-I [m2/m] [m2/m]	deff [mm]	t-min [mm]	t-max [mm]	SMP [o/o]	thet-p [tm2/m]	thet-y [tm2/m]	thet-z [tm2/m]	thet-yz [tm2/m]
	6.577	48.6	45.0	52.0	0.0	0.588	0.556	0.031	

SOFiSTiK AG - www.sofistik.de

Composite bridge 38+50+38, b=14.25m, 2x2HL1100R HISTAR460 , slab 0.30m C30/37

Cross section No. 375.3 = CS 20 - in-situ conc:C2

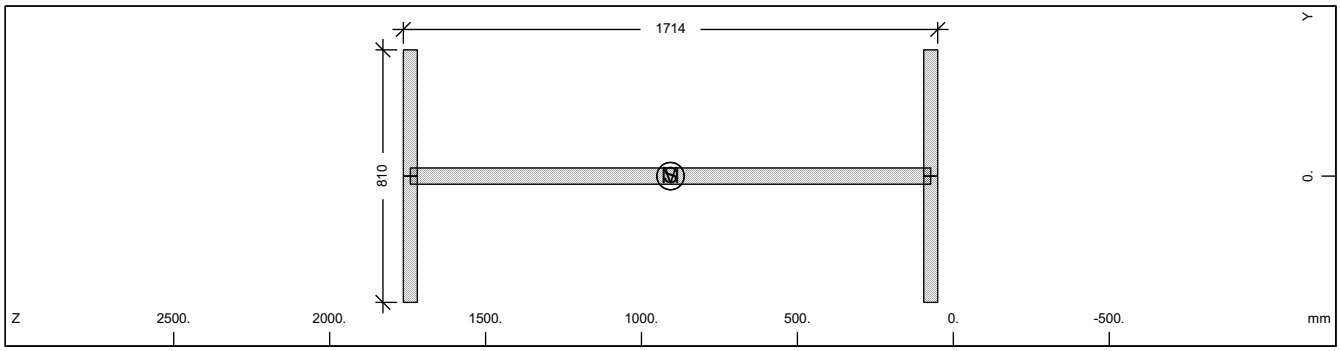

Cross section No. 375

Static properties of cross section

Mat NoR	A[cm2] It[cm4]	Ay/Az/Ayz [cm2]	Iy/Iz/Iyz [cm4]	ys/zs [mm]	modules [N/mm2]	gam [kN/m]
1	1596.73	607.50	7088401.2	0.0	210000	12.53
	6270.0	815.49	398580.9	906.9	80769	

Additional static properties of cross section

Alfa-T [1/°K]	ymin ymax [mm]	zmin zmax [mm]	hymin hzmin [mm]	AK AB [cm2]	MB	Tau-T Tau-B [1/m3]	Tau-Vy Tau-Vz [1/m2]
1.2E-05	-405.0	-856.9		9.424E+02		4.081E+02	2.058E+01
	405.0	856.9				1.255E+02	1.316E+01

Section values for warping

Wmin[cm2]	Wmax[cm2]	CM[cm6]	CMS[cm4]	ASwyy[cm6]	ASwzz[cm6]	ry[mm]	rz[mm]
-3379.12	3379.122774685865.		4229058.7	-1.20	-21.27	0.0	0.0

Design values of cross section

Mat NoR	A[cm2] It[cm4]	Ay/Az/Ayz [cm2]	Iy/Iz/Iyz [cm4]	ys/zs [mm]	modules [N/mm2]	gam [kN/m]
1	1596.73	607.50	7088401.2	0.0	182609	12.53
	6270.0	815.49	398580.9	906.9	70234	

Design forces and moments
(C/E = characteristic plastic/elastic, D=plast.Design, F=elast. Design)

	N[kN]	Vy[kN]	Vz[kN]	Mt[kNm]	My[kNm]	Mz[kNm]	y[mm]	z[mm]	BUCK
C	53490.3	14099.76	16782.87	753.60	32502.88	5323.25	0.0	906.9	c c
C	0.0				0.00	0.00	0.0	0.0	COMB
E	53490.3	9399.84	14695.65	473.93	27713.28	3296.90	0.0	906.9	
D	46513.3	12260.66	14593.80	655.30	28263.38	4628.91	0.0	906.9	
D	0.0				0.00	0.00	0.0	0.0	COMB
F	46513.3	8173.78	12778.83	412.11	24098.51	2866.87	0.0	906.9	

Additional Design Data

M	periphery-O/-I [m2/m] [m2/m]	deff [mm]	t-min [mm]	t-max [mm]	SMP [o/o]	thet-p [tm2/m]	thet-y [tm2/m]	thet-z [tm2/m]	thet-yz [tm2/m]
	6.577	48.6	45.0	52.0	0.0	0.588	0.556	0.031	

SOFiSTiK AG - www.sofistik.de

Composite bridge 38+50+38, b=14.25m, 2x2HL1100R HISTAR460 , slab 0.30m C30/37

Cross section No. 375.4 = CS 21 - reinf active:C2

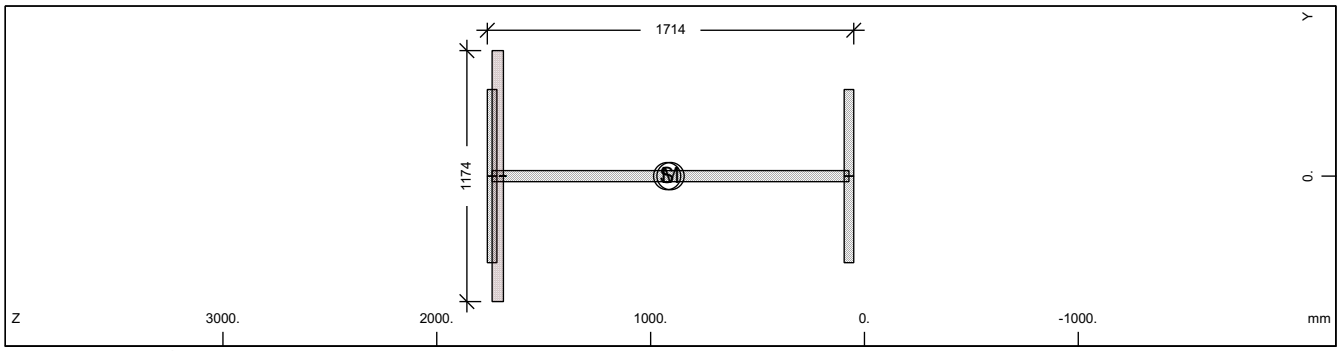

Cross section No. 375

Static properties of cross section

Mat NoR	A[cm2] It[cm4]	Ay/Az/Ayz [cm2]	Iy/Iz/Iyz [cm4]	ys/zs [mm]	modules [N/mm2]	gam [kN/m]
1	1628.88	607.50	7293967.9	0.0	210000	14.09
	6270.0	816.70	398580.9	922.8	80769	

Additional static properties of cross section

Alfa-T [1/°K]	ymin ymax [mm]	zmin zmax [mm]	hymin hzmin [mm]	AK AB [cm2]	MB	Tau-T Tau-B [1/m3]	Tau-Vy Tau-Vz [1/m2]
1.2E-05	-587.0	-872.8		4.476E+02		3.806E+01	2.058E+01
	587.0	840.9		6.209E+02		1.255E+02	1.313E+01

Section values for warping

Wmin[cm2]	Wmax[cm2]	CM[cm6]	CMS[cm4]	ASwyy[cm6]	ASwzz[cm6]	ry[mm]	rz[mm]
-3379.12	3379.122774685865.		4229058.7	-1.80	-32.93	0.0	6.4

Partial cross sections

Mat NoR	A[cm2] It[cm4]	Ay/Az/Ayz [cm2]	Iy/Iz/Iyz [cm4]	ys/zs [mm]	modules [N/mm2]	gam [kN/m]
1	1596.73	607.50	7088401.2	0.0	210000	12.53
	12741.8	816.68	398580.9	906.9	80769	
25	620.94		1447.5	0.0	10667	1.55
	2852745.4	0.38	0.0	1714.8	4444	
210	0.64	0.00	0.0	0.0	200000	0.00
	2.2	0.00	0.0	1691.2	76923	

Design values of cross section

Mat NoR	A[cm2] It[cm4]	Ay/Az/Ayz [cm2]	Iy/Iz/Iyz [cm4]	ys/zs [mm]	modules [N/mm2]	gam [kN/m]
1	1621.52	607.50	7247582.9	0.0	182609	14.09
	6270.0	816.69	398580.9	919.2	70234	

Design forces and moments
(C/E = characteristic plastic/elastic, D=plast.Design, F=elast. Design)

	N[kN]	Vy[kN]	Vz[kN]	Mt[kNm]	My[kNm]	Mz[kNm]	y[mm]	z[mm]	BUCK
C	53522.4	14118.33	18269.30	1362.70	32528.09	5597.96	0.8	907.8	c c
C	-523.1				32532.02	0.00	0.0	922.8	COMB
C	-931.4				0.00	5596.87	0.0	0.0	COMB
C	-55385.3	14118.33	18269.30	1362.70	-33981.5	-5596.39	-0.8	961.2	
C	-1339.7				-34007.3	0.00	0.0	922.8	COMB
C	-931.4				0.00	-5596.87	0.0	0.0	COMB
E	54567.4	9399.84	14733.37	433.49	27996.23	3296.90	0.0	922.8	
E	-54567.4	9399.84	14733.37	433.49	-27996.2	-3296.90	0.0	922.8	
D	46541.3	12276.81	15678.47	1062.93	28285.29	4811.86	0.6	907.8	
D	-454.9				28288.71	0.00	0.0	922.8	COMB
D	-620.9				0.00	4811.38	0.0	0.0	COMB
D	-47783.1	12276.81	15678.47	1062.93	-29262.0	-4811.09	-0.6	948.8	
D	-787.0				-29272.2	0.00	0.0	922.8	COMB
D	-620.9				0.00	-4811.38	0.0	0.0	COMB

SOFiSTiK AG - www.sofistik.de

Composite bridge 38+50+38, b=14.25m, 2x2HL1100R HISTAR460 , slab 0.30m C30/37

Design forces and moments
(C/E = characteristic plastic/elastic, D=plast.Design, F=elast. Design)

	N[kN]	Vy[kN]	Vz[kN]	Mt[kNm]	My[kNm]	Mz[kNm]	y[mm]	z[mm]	BUCK
F	47449.9	8173.78	12811.63	288.99	24344.55	2866.87	0.0	922.8	
F	-47449.9	8173.78	12811.63	288.99	-24344.5	-2866.87	0.0	922.8	

Additional Design Data

M	periphery-O/-I [m2/m]	[m2/m]	deff [mm]	t-min [mm]	t-max [mm]	SMP [o/o]	thet-p [tm2/m]	thet-y [tm2/m]	thet-z [tm2/m]	thet-yz [tm2/m]
	6.687		48.7	32.0	52.9	0.0	0.678	0.647	0.031	
1	6.577		48.6	45.0	52.0	0.0	0.588	0.556	0.031	
25	0.106		1174.0			0.0	0.000	0.000		
**	0.004		32.0			0.0	0.000		0.000	

Cross section No. 375.5 = CS 30 - in-situ conc:C3

Cross section No. 376 - VFT (353)

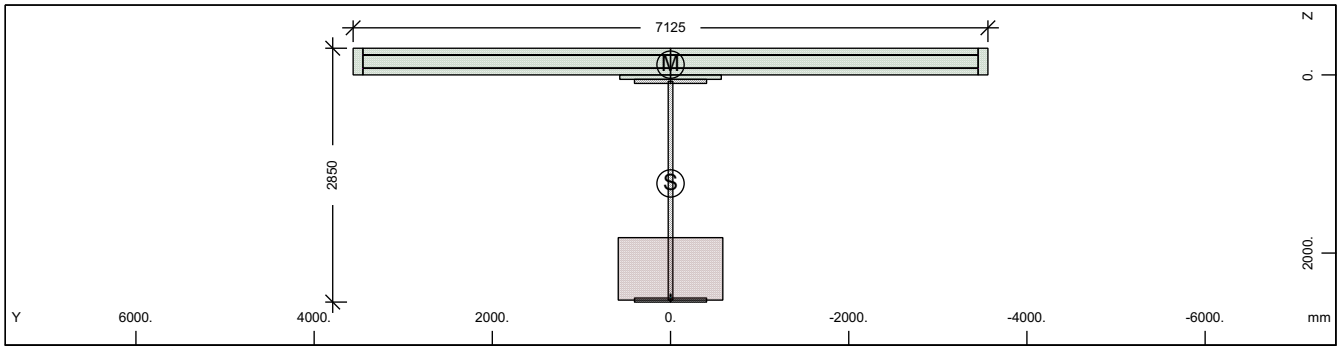

Cross section No. 376 - VFT (353)

Static properties of cross section

Mat NoR	A[cm2] It[cm4]	Ay/Az/Ayz [cm2]	Iy/Iz/Iyz [cm4]	ys/zs [mm]	y/z-sc [mm]	modules [N/mm2]	gam [kN/m]
1	2837.20	360.96	29307777.	0.0	0.0	210000	91.18
	6270.0	859.20	16807531.	1218.4	-115.6	80769	

Additional static properties of cross section

Alfa-T [1/°K]	ymin ymax [mm]	zmin zmax [mm]	hymin hzmin [mm]	AK AB [cm2]	MB	Tau-T Tau-B [1/m3]	Tau-Vy Tau-Vz [1/m2]
1.2E-05	-3562.5	-1518.4		5.530E+03		3.081E+00	3.377E+01
	3562.5	1331.6		3.017E+04		1.255E+02	1.619E+01

Section values for warping

Wmin[cm2]	Wmax[cm2]	CM[cm6]	CMS[cm4]	ASwyy[cm6]	ASwzz[cm6]	ry[mm]	rz[mm]
-10704.57	10704.57	1.511E+10	3656530.0	278.24	485.18	0.0	1827.2

Partial cross sections

Mat NoR	A[cm2] It[cm4]	Ay/Az/Ayz [cm2]	Iy/Iz/Iyz [cm4]	ys/zs [mm]	modules [N/mm2]	gam [kN/m]
1	2005.59	0.12	17395803.	0.0	210000	15.74
	16427.1	587.51	398580.9	1300.0	80769	
25	8229.60		3369913.3	0.0	10667	20.57
	37808869.	75.34	0.0	2177.0	4444	
210	0.64	0.00	0.0	0.0	200000	0.00
	2.2	0.00	0.0	2477.5	76923	
31	21945.00	18040.50	170028.4	0.0	0	54.86
	6417251.4	12406.34	904880243.	-145.5	0	
300	433.63	378.88	24391.9	0.0	200000	0.00
	14.3	280.39	17229392.	-150.0	76923	

SOFiSTiK AG - www.sofistik.de

Composite bridge 38+50+38, b=14.25m, 2x2HL1100R HISTAR460 , slab 0.30m C30/37

Design values of cross section

Mat NoR	A[cm2] It[cm4]	Ay/Az/Ayz [cm2]	Iy/Iz/Iyz [cm4]	ys/zs [mm]	modules [N/mm2]	gam [kN/m]
1	2739.67	360.96	28339660.	0.0	182609	91.18
	6270.0	857.73	16807529.	1184.3	70234	

Design forces and moments
(C/E = characteristic plastic/elastic, D=plast.Design, F=elast. Design)

	N[kN]	Vy[kN]	Vz[kN]	Mt[kNm]	My[kNm]	Mz[kNm]	y[mm]	z[mm]	BUCK
C	88901.3	62845.52	67532.07	107524.4	99504.70	103961.3	26.0	-73.8	c c
C	-84641.7				175839.5	0.00	0.0	1218.	COMB
C	-45261.9				0.00	103907.7	0.0	0.0	COMB
C	-166225.	62845.52	67532.06	107524.3	-109220.	-103321.	-26.0	1387.	
C	-5882.1				-109717.	0.00	0.0	1218.	COMB
C	-45261.9				0.00	-103908.	0.0	0.0	COMB
E	95046.3	8548.01	17826.33	5355.85	73732.12	25558.15	0.0	1218.	
E	-95046.3	8548.01	17826.33	5355.85	-73732.1	-25558.1	0.0	1218.	
D	77305.4	47301.47	50661.06	71896.58	85225.59	78009.63	20.0	-22.1	
D	-60243.7				134685.8	0.00	0.0	1218.	COMB
D	-30174.6				0.00	77982.18	0.0	0.0	COMB
D	-128855.	47301.47	50661.06	71896.57	-90603.9	-77680.9	-20.0	1222.	
D	-105.5				-90604.1	0.00	0.0	1218.	COMB
D	-30174.6				0.00	-77982.2	0.0	0.0	COMB
F	82649.0	7433.05	15501.16	3570.57	64114.88	22224.48	0.0	1218.	
F	-82649.0	7433.05	15501.16	3570.57	-64114.9	-22224.5	0.0	1218.	

Additional Design Data

M	periphery-O/-I [m2/m]	[m2/m]	deff [mm]	t-min [mm]	t-max [mm]	SMP [o/o]	thet-p [tm2/m]	thet-y [tm2/m]	thet-z [tm2/m]	thet-yz [tm2/m]
	53.706		10.6	3.1	701.0	0.0	33.037	10.384	22.653	
1	8.150		49.2	45.0	52.0	0.0	1.397	1.366	0.031	
25	1.402		1174.0			0.0	0.084	0.084		
**	0.004		32.0			0.0	0.000		0.000	
31	16.530		265.5	50.0	300.0	0.0	22.626	0.004	22.622	
**	27.620		3.1	3.1	3.1	0.0	0.000	0.000	0.000	

Cross section No. 376.1 = CS 1 - steel alone

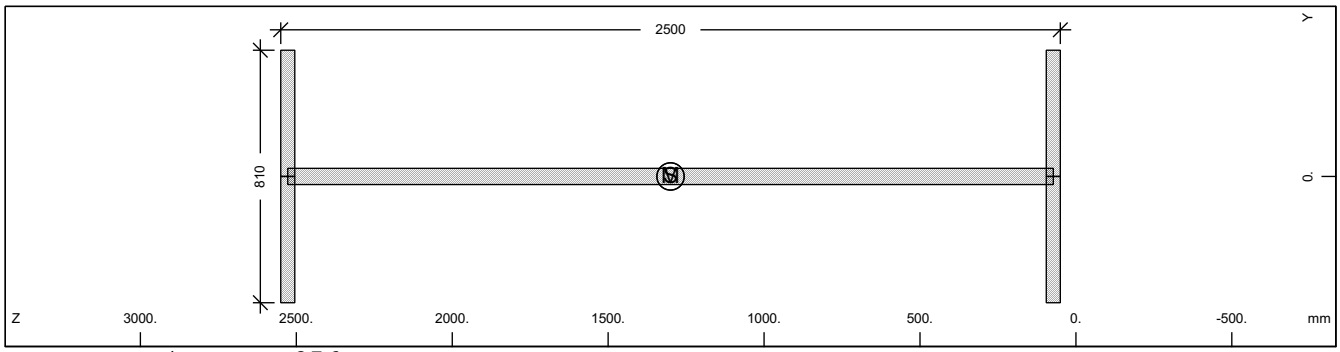

Cross section No. 376

Static properties of cross section

Mat NoR	A[cm2] It[cm4]	Ay/Az/Ayz [cm2]	Iy/Iz/Iyz [cm4]	ys/zs [mm]	modules [N/mm2]	gam [kN/m]
1	2005.59	607.50	17395803.	0.0	210000	15.74
	6270.0	1212.91	398580.9	1300.0	80769	

Additional static properties of cross section

Alfa-T [1/°K]	ymin / ymax [mm]	zmin / zmax [mm]	hymin / hzmin [mm]	AK / AB [cm2]	MB	Tau-T / Tau-B [1/m3]	Tau-Vy / Tau-Vz [1/m2]
1.2E-05	-405.0	-1250.0		1.215E+03		3.165E+02	2.058E+01
	405.0	1250.0				1.255E+02	9.277E+00

SOFiSTiK AG - www.sofistik.de

Composite bridge 38+50+38, b=14.25m, 2x2HL1100R HISTAR460 , slab 0.30m C30/37

Section values for warping

Wmin[cm2]	Wmax[cm2]	CM[cm6]	CMS[cm4]	ASwyy[cm6]	ASwzz[cm6]	ry[mm]	rz[mm]
-4971.35	4971.356005582889.	9153455.6		-6.31	-275.54	0.0	0.0

Design values of cross section

Mat NoR	A[cm2] It[cm4]	Ay/Az/Ayz [cm2]	Iy/Iz/Iyz [cm4]	ys/zs [mm]	modules [N/mm2]	gam [kN/m]
1	2005.59	607.50	17395803.	0.0	182609	15.74
	6270.0	1212.91	398580.9	1300.0	70234	

Design forces and moments
(C/E = characteristic plastic/elastic, D=plast.Design, F=elast. Design)

	N[kN]	Vy[kN]	Vz[kN]	Mt[kNm]	My[kNm]	Mz[kNm]	y[mm]	z[mm]	BUCK
C	67187.4	14099.76	24690.90	959.21	56224.69	5501.31	0.0	1300.	c c
C	0.0				0.00	0.00	0.0	0.0	COMB
E	67187.4	9399.84	20848.74	611.00	46620.96	3296.90	0.0	1300.	
D	58423.8	12260.66	21470.35	834.09	48891.04	4783.75	0.0	1300.	
D	0.0				0.00	0.00	0.0	0.0	COMB
F	58423.8	8173.78	18129.34	531.31	40539.97	2866.87	0.0	1300.	

Additional Design Data

M	periphery-O/-I [m2/m]	[m2/m]	deff [mm]	t-min [mm]	t-max [mm]	SMP [o/o]	thet-p [tm2/m]	thet-y [tm2/m]	thet-z [tm2/m]	thet-yz [tm2/m]
	8.150		49.2	45.0	52.0	0.0	1.397	1.366	0.031	

Cross section No. 376.2 = CS 10 - prefab. slab C1

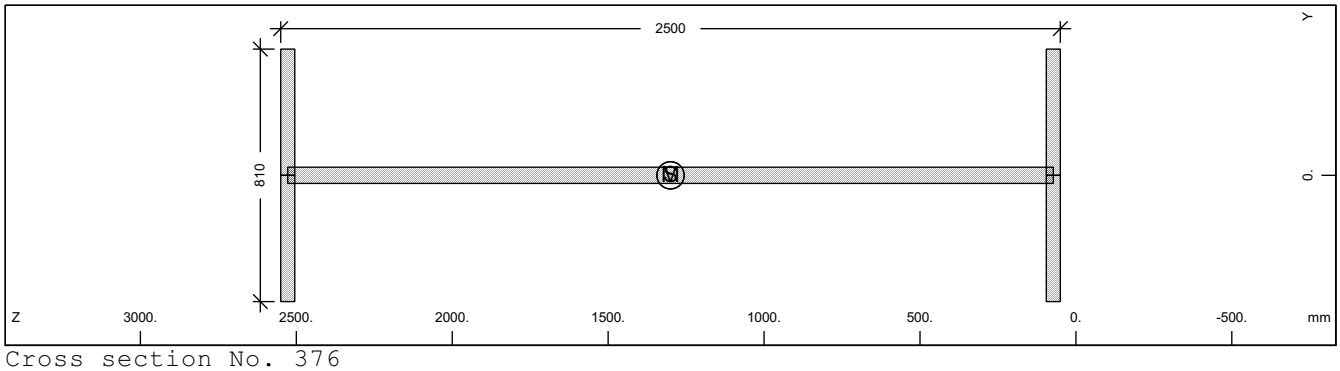

Cross section No. 376

Static properties of cross section

Mat NoR	A[cm2] It[cm4]	Ay/Az/Ayz [cm2]	Iy/Iz/Iyz [cm4]	ys/zs [mm]	modules [N/mm2]	gam [kN/m]
1	2005.59	607.50	17395803.	0.0	210000	15.74
	6270.0	1212.91	398580.9	1300.0	80769	

Additional static properties of cross section

Alfa-T [1/°K]	ymin ymax [mm]	zmin zmax [mm]	hymin hzmin [mm]	AK AB [cm2]	MB	Tau-T Tau-B [1/m3]	Tau-Vy Tau-Vz [1/m2]
1.2E-05	-405.0	-1250.0		1.215E+03		3.165E+02	2.058E+01
	405.0	1250.0				1.255E+02	9.277E+00

Section values for warping

Wmin[cm2]	Wmax[cm2]	CM[cm6]	CMS[cm4]	ASwyy[cm6]	ASwzz[cm6]	ry[mm]	rz[mm]
-4971.35	4971.356005582889.	9153455.6		-6.31	-275.54	0.0	0.0

Design values of cross section

Mat NoR	A[cm2] It[cm4]	Ay/Az/Ayz [cm2]	Iy/Iz/Iyz [cm4]	ys/zs [mm]	modules [N/mm2]	gam [kN/m]
1	2005.59	607.50	17395803.	0.0	182609	15.74
	6270.0	1212.91	398580.9	1300.0	70234	

SOFiSTiK AG - www.sofistik.de

Composite bridge 38+50+38, b=14.25m, 2x2HL1100R HISTAR460 , slab 0.30m C30/37

Design forces and moments
(C/E = characteristic plastic/elastic, D=plast.Design, F=elast. Design)

	N[kN]	Vy[kN]	Vz[kN]	Mt[kNm]	My[kNm]	Mz[kNm]	y[mm]	z[mm]	BUCK
C	67187.4	14099.76	24690.90	959.21	56224.69	5501.31	0.0	1300.	c c
C	0.0				0.00	0.00	0.0	0.0	COMB
E	67187.4	9399.84	20848.74	611.00	46620.96	3296.90	0.0	1300.	
D	58423.8	12260.66	21470.35	834.09	48891.04	4783.75	0.0	1300.	
D	0.0				0.00	0.00	0.0	0.0	COMB
F	58423.8	8173.78	18129.34	531.31	40539.97	2866.87	0.0	1300.	

Additional Design Data

M	periphery-O/-I [m2/m]	[m2/m]	deff [mm]	t-min [mm]	t-max [mm]	SMP [o/o]	thet-p [tm2/m]	thet-y [tm2/m]	thet-z [tm2/m]	thet-yz [tm2/m]
	8.150		49.2	45.0	52.0	0.0	1.397	1.366	0.031	

Cross section No. 376.3 = CS 20 - in-situ conc:C2

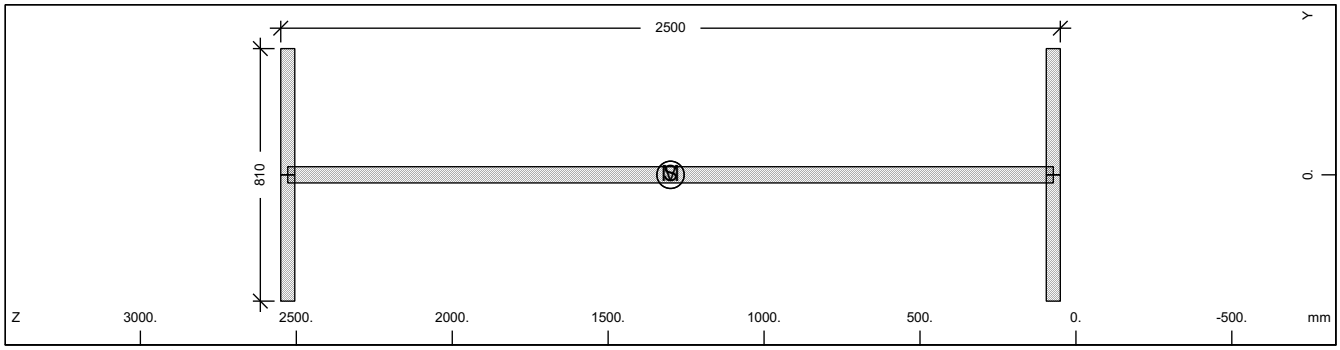

Cross section No. 376

Static properties of cross section

Mat NoR	A[cm2] It[cm4]	Ay/Az/Ayz [cm2]	Iy/Iz/Iyz [cm4]	ys/zs [mm]	modules [N/mm2]	gam [kN/m]
1	2005.59	607.50	17395803.	0.0	210000	15.74
	6270.0	1212.91	398580.9	1300.0	80769	

Additional static properties of cross section

Alfa-T [1/°K]	ymin ymax [mm]	zmin zmax [mm]	hymin hzmin [mm]	AK AB [cm2]	MB	Tau-T Tau-B [1/m3]	Tau-Vy Tau-Vz [1/m2]
1.2E-05	-405.0	-1250.0		1.215E+03		3.165E+02	2.058E+01
	405.0	1250.0				1.255E+02	9.277E+00

Section values for warping

Wmin[cm2]	Wmax[cm2]	CM[cm6]	CMS[cm4]	ASwyy[cm6]	ASwzz[cm6]	ry[mm]	rz[mm]
-4971.35	4971.356005582889.		9153455.6	-6.31	-275.54	0.0	0.0

Design values of cross section

Mat NoR	A[cm2] It[cm4]	Ay/Az/Ayz [cm2]	Iy/Iz/Iyz [cm4]	ys/zs [mm]	modules [N/mm2]	gam [kN/m]
1	2005.59	607.50	17395803.	0.0	182609	15.74
	6270.0	1212.91	398580.9	1300.0	70234	

Design forces and moments
(C/E = characteristic plastic/elastic, D=plast.Design, F=elast. Design)

	N[kN]	Vy[kN]	Vz[kN]	Mt[kNm]	My[kNm]	Mz[kNm]	y[mm]	z[mm]	BUCK
C	67187.4	14099.76	24690.90	959.21	56224.69	5501.31	0.0	1300.	c c
C	0.0				0.00	0.00	0.0	0.0	COMB
E	67187.4	9399.84	20848.74	611.00	46620.96	3296.90	0.0	1300.	
D	58423.8	12260.66	21470.35	834.09	48891.04	4783.75	0.0	1300.	
D	0.0				0.00	0.00	0.0	0.0	COMB
F	58423.8	8173.78	18129.34	531.31	40539.97	2866.87	0.0	1300.	

SOFiSTiK AG - www.sofistik.de

Composite bridge 38+50+38, b=14.25m, 2x2HL1100R HISTAR460 , slab 0.30m C30/37

Additional Design Data

M	periphery-O/-I [m2/m]	[m2/m]	deff [mm]	t-min [mm]	t-max [mm]	SMP [o/o]	thet-p [tm2/m]	thet-y [tm2/m]	thet-z [tm2/m]	thet-yz [tm2/m]
	8.150		49.2	45.0	52.0	0.0	1.397	1.366	0.031	

Cross section No. 376.4 = CS 21 - reinf active:C2

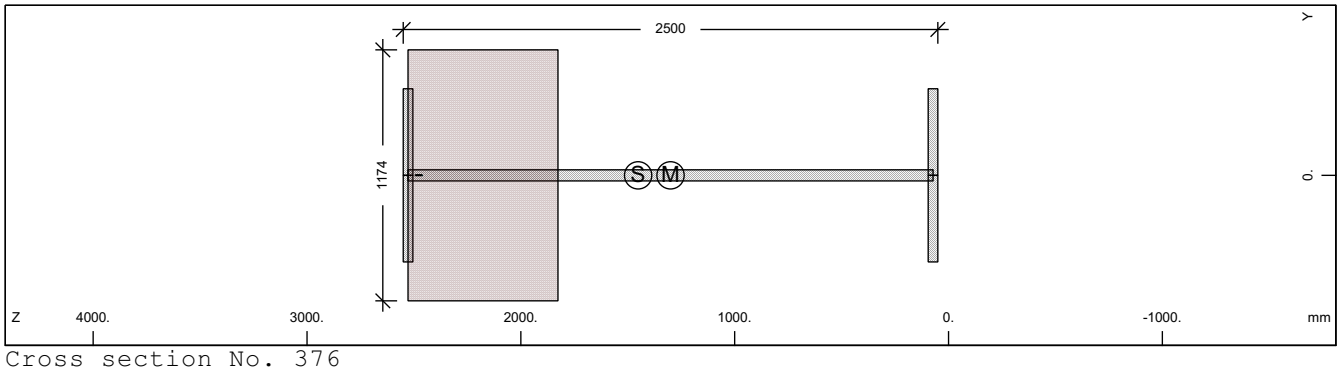

Cross section No. 376

Static properties of cross section

Mat NoR	A[cm2] It[cm4]	Ay/Az/Ayz [cm2]	Iy/Iz/Iyz [cm4]	ys/zs [mm]	modules [N/mm2]	gam [kN/m]
1	2424.22	607.50	20233953.	0.0	210000	36.32
	6270.0	1117.95	398580.9	1451.5	80769	

Additional static properties of cross section

Alfa-T [1/°K]	ymin ymax [mm]	zmin zmax [mm]	hymin hzmin [mm]	AK AB [cm2]	MB	Tau-T Tau-B [1/m3]	Tau-Vy Tau-Vz [1/m2]
1.2E-05	-587.0	-1401.5		5.530E+03		3.081E+00	2.058E+01
	587.0	1098.5		8.230E+03		1.255E+02	9.477E+00

Section values for warping

Wmin[cm2]	Wmax[cm2]	CM[cm6]	CMS[cm4]	ASwyy[cm6]	ASwzz[cm6]	ry[mm]	rz[mm]
-4971.35	4971.356005582889.		9153455.6	-2.44	-123.93	0.0	3.4

Partial cross sections

Mat NoR	A[cm2] It[cm4]	Ay/Az/Ayz [cm2]	Iy/Iz/Iyz [cm4]	ys/zs [mm]	modules [N/mm2]	gam [kN/m]
1	2005.59	607.50	17395803.	0.0	210000	15.74
	16427.1	1110.01	398580.9	1300.0	80769	
25	8229.60		3369913.3	0.0	10667	20.57
	37808869.	144.27	0.0	2177.0	4444	
210	0.64	0.00	0.0	0.0	200000	0.00
	2.2	0.00	0.0	2477.5	76923	

Design values of cross section

Mat NoR	A[cm2] It[cm4]	Ay/Az/Ayz [cm2]	Iy/Iz/Iyz [cm4]	ys/zs [mm]	modules [N/mm2]	gam [kN/m]
1	2326.68	607.50	19659141.	0.0	182609	36.32
	6270.0	1116.09	398580.9	1421.1	70234	

Design forces and moments
(C/E = characteristic plastic/elastic, D=plast.Design, F=elast. Design)

	N[kN]	Vy[kN]	Vz[kN]	Mt[kNm]	My[kNm]	Mz[kNm]	y[mm]	z[mm]	BUCK
C	67219.5	14118.33	38731.62	8937.67	56262.54	9260.27	7.3	1301.	c c
C	-5246.8				56657.61	0.00	0.0	1452.	COMB
C	-12344.4				0.00	9124.65	0.0	0.0	COMB
C	-91908.4	14118.33	38731.62	8937.67	-69437.6	-9080.56	-7.1	1918.	
C	-19442.0				-74568.8	0.00	0.0	1452.	COMB
C	-12344.4				0.00	-9124.65	0.0	0.0	COMB
E	81211.3	9399.84	20409.62	5355.81	48364.66	3296.90	0.0	1452.	
E	-81211.3	9399.84	20409.62	5355.81	-48364.7	-3296.90	0.0	1452.	
D	58451.8	12276.81	30924.54	6154.63	48923.94	7267.16	5.5	1301.	

SOFiSTiK AG - www.sofistik.de

Composite bridge 38+50+38, b=14.25m, 2x2HL1100R HISTAR460 , slab 0.30m C30/37

Design forces and moments
(C/E = characteristic plastic/elastic, D=plast.Design, F=elast. Design)

	N[kN]	Vy[kN]	Vz[kN]	Mt[kNm]	My[kNm]	Mz[kNm]	y[mm]	z[mm]	BUCK
D	-4562.4				49267.49	0.00	0.0	1452.	COMB
D	-8229.6				0.00	7199.36	0.0	0.0	COMB
D	-74911.0	12276.81	30924.54	6154.63	-52380.0	-7176.76	-5.5	1764.	
D	-11896.8				-61208.3	0.00	0.0	1452.	COMB
D	-8229.6				0.00	-7199.36	0.0	0.0	COMB
F	70618.5	8173.78	17747.50	3570.54	42056.23	2866.87	0.0	1452.	
F	-70618.5	8173.78	17747.50	3570.54	-42056.2	-2866.87	0.0	1452.	

Additional Design Data

M	periphery-O/-I [m2/m]	[m2/m]	deff [mm]	t-min [mm]	t-max [mm]	SMP [o/o]	thet-p [tm2/m]	thet-y [tm2/m]	thet-z [tm2/m]	thet-yz [tm2/m]
	9.556		50.7	32.0	701.0	0.0	2.167	2.136	0.031	
1	8.150		49.2	45.0	52.0	0.0	1.397	1.366	0.031	
25	1.402		1174.0			0.0	0.084	0.084		
**	0.004		32.0			0.0	0.000		0.000	

Cross section No. 376.5 = CS 30 - in-situ conc:C3

Cross section No. 377 - VFT (353)

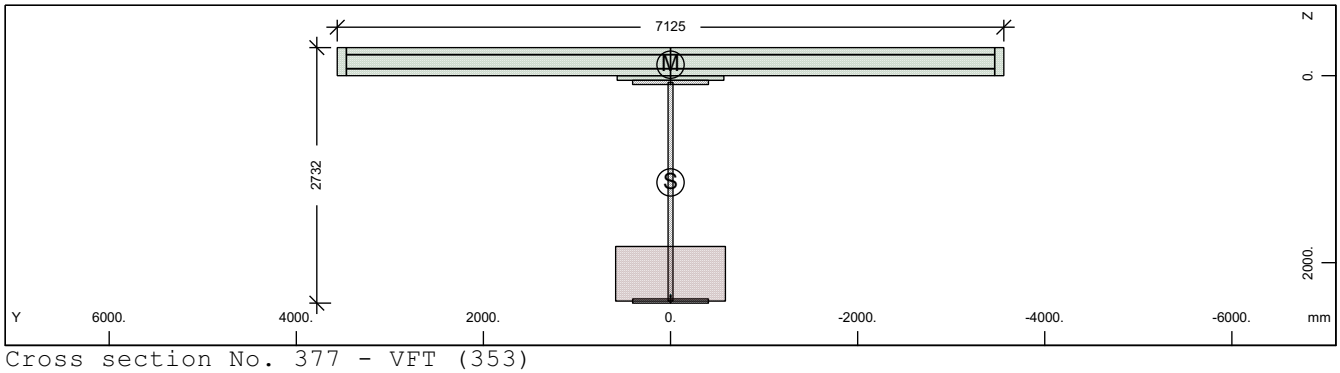

Cross section No. 377 - VFT (353)

Static properties of cross section

Mat NoR	A[cm2] It[cm4]	Ay/Az/Ayz [cm2]	Iy/Iz/Iyz [cm4]	ys/zs [mm]	y/z-sc [mm]	modules [N/mm2]	gam [kN/m]
1	2707.30	362.04	26044482.	0.0	0.0	210000	87.25
	6270.0	808.83	16980058.	1141.1	-117.3	80769	

Additional static properties of cross section

Alfa-T [1/°K]	ymin ymax [mm]	zmin zmax [mm]	hymin hzmin [mm]	AK AB [cm2]	MB	Tau-T Tau-B [1/m3]	Tau-Vy Tau-Vz [1/m2]
1.2E-05	-3562.5	-1441.1		4.607E+03		3.697E+00	3.366E+01
	3562.5	1291.2		2.879E+04		1.255E+02	1.731E+01

Section values for warping

Wmin[cm2]	Wmax[cm2]	CM[cm6]	CMS[cm4]	ASwyy[cm6]	ASwzz[cm6]	ry[mm]	rz[mm]
-10235.05	10235.05	1.391E+10	3137164.2	-231.96	-355.79	0.0	1665.8

Partial cross sections

Mat NoR	A[cm2] It[cm4]	Ay/Az/Ayz [cm2]	Iy/Iz/Iyz [cm4]	ys/zs [mm]	modules [N/mm2]	gam [kN/m]
1	1944.41	0.12	15489753.	0.0	210000	15.26
	15875.6	535.76	398580.9	1241.2	80769	
25	6848.26		1941886.2	0.0	10667	17.12
	31462655.	52.38	0.0	2118.2	4444	
210	0.64	0.00	0.0	0.0	200000	0.00
	2.2	0.00	0.0	2359.8	76923	
31	21945.00	17782.08	170028.4	0.0	0	54.86
	6417251.4	12394.40	904880243.	-145.5	0	

SOFiSTiK AG - www.sofistik.de

Composite bridge 38+50+38, b=14.25m, 2x2HL1100R HISTAR460 , slab 0.30m C30/37

300	435.15	380.02	24477.1	0.0	200000	0.00
	14.3	283.16	17410547.	-150.0	76923	

Design values of cross section

Mat	A[cm2]	Ay/Az/Ayz	Iy/Iz/Iyz	ys/zs	modules	gam
NoR	It[cm4]	[cm2]	[cm4]	[mm]	[N/mm2]	[kN/m]
1	2626.13	362.04	25222749.	0.0	182609	87.25
	6270.0	807.65	16980058.	1110.9	70234	

Design forces and moments
(C/E = characteristic plastic/elastic, D=plast.Design, F=elast. Design)

	N[kN]	Vy[kN]	Vz[kN]	Mt[kNm]	My[kNm]	Mz[kNm]	y[mm]	z[mm]	BUCK
C	86927.3	62889.23	64069.49	106155.8	92935.05	103500.4	25.6	-71.7	c c
C	-84075.5				165340.8	0.00	0.0	1141.	COMB
C	-43189.9				0.00	103534.8	0.0	0.0	COMB
C	-161554.	62889.23	64069.49	106155.7	-100634.	-102974.	-25.6	1207.	
C	-2304.3				-100710.	0.00	0.0	1141.	COMB
C	-43189.9				0.00	-103535.	0.0	0.0	COMB
E	90694.5	8575.74	16679.02	4462.51	67572.81	25730.63	0.0	1141.	
E	-90694.5	8575.74	16679.02	4462.51	-67572.8	-25730.6	0.0	1141.	
D	75589.0	47339.49	48112.58	70977.95	79530.08	77767.38	20.0	-35.1	
D	-59751.3				126588.5	0.00	0.0	1141.	COMB
D	-28793.3				0.00	77781.32	0.0	0.0	COMB
D	-125340.	47339.49	48112.57	70977.95	-83424.2	-77493.5	-20.0	1070.	
D	2164.8				-83501.6	0.00	0.0	1141.	COMB
D	-28793.3				0.00	-77781.3	0.0	0.0	COMB
F	78864.8	7457.17	14503.50	2975.01	58758.97	22374.46	0.0	1141.	
F	-78864.8	7457.17	14503.50	2975.01	-58759.0	-22374.5	0.0	1141.	

Additional Design Data

M	periphery-O/-I		deff	t-min	t-max	SMP	thet-p	thet-y	thet-z	thet-yz
	[m2/m]	[m2/m]	[mm]	[mm]	[mm]	[o/o]	[tm2/m]	[tm2/m]	[tm2/m]	[tm2/m]
	53.332		10.2	3.1	583.3	0.0	31.514	8.861	22.653	
1	7.915		49.1	45.0	52.0	0.0	1.247	1.216	0.031	
25	1.167		1174.0			0.0	0.049	0.049		
**	0.004		32.0			0.0	0.000		0.000	
31	16.530		265.5	50.0	300.0	0.0	22.626	0.004	22.622	
**	27.716		3.1	3.1	3.1	0.0	0.000	0.000	0.000	

Cross section No. 377.1 = CS 1 - steel alone

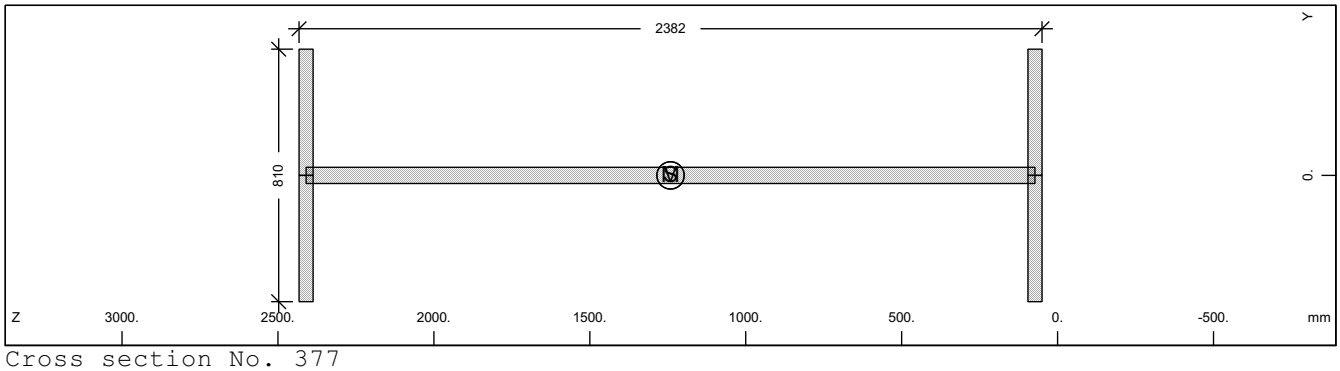

Cross section No. 377

Static properties of cross section

Mat	A[cm2]	Ay/Az/Ayz	Iy/Iz/Iyz	ys/zs	modules	gam
NoR	It[cm4]	[cm2]	[cm4]	[mm]	[N/mm2]	[kN/m]
1	1944.41	607.50	15489753.	0.0	210000	15.26
	6270.0	1154.13	398580.9	1241.2	80769	

SOFiSTiK AG - www.sofistik.de

Composite bridge 38+50+38, b=14.25m, 2x2HL1100R HISTAR460 , slab 0.30m C30/37

Additional static properties of cross section

Alfa-T	ymin	zmin	hymin	AK	MB	Tau-T	Tau-Vy
	ymax	zmax	hzmin	AB		Tau-B	Tau-Vz
[1/°K]	[mm]	[mm]	[mm]	[cm2]		[1/m3]	[1/m2]
1.2E-05	-405.0	-1191.2		1.174E+03		3.275E+02	2.058E+01
	405.0	1191.2				1.255E+02	9.697E+00

Section values for warping

Wmin[cm2]	Wmax[cm2]	CM[cm6]	CMS[cm4]	ASwyy[cm6]	ASwzz[cm6]	ry[mm]	rz[mm]
-4733.09	4733.095443716443.		8297082.1	-1.88	-73.23	0.0	0.0

Design values of cross section

Mat	A[cm2]	Ay/Az/Ayz	Iy/Iz/Iyz	ys/zs	modules	gam
NoR	It[cm4]	[cm2]	[cm4]	[mm]	[N/mm2]	[kN/m]
1	1944.41	607.50	15489753.	0.0	182609	15.26
	6270.0	1154.13	398580.9	1241.2	70234	

Design forces and moments
(C/E = characteristic plastic/elastic, D=plast.Design, F=elast. Design)

	N[kN]	Vy[kN]	Vz[kN]	Mt[kNm]	My[kNm]	Mz[kNm]	y[mm]	z[mm]	BUCK
C	65137.7	14099.76	23507.53	928.44	52332.32	5474.67	0.0	1241.	c c
C	0.0				0.00	0.00	0.0	0.0	COMB
E	65137.7	9399.84	19945.13	590.49	43563.01	3296.90	0.0	1241.	
D	56641.5	12260.66	20441.34	807.34	45506.36	4760.58	0.0	1241.	
D	0.0				0.00	0.00	0.0	0.0	COMB
F	56641.5	8173.78	17343.59	513.47	37880.88	2866.87	0.0	1241.	

Additional Design Data

M	periphery-O/-I		deff	t-min	t-max	SMP	thet-p	thet-y	thet-z	thet-yz
	[m2/m]	[m2/m]	[mm]	[mm]	[mm]	[o/o]	[tm2/m]	[tm2/m]	[tm2/m]	[tm2/m]
	7.915		49.1	45.0	52.0	0.0	1.247	1.216	0.031	

Cross section No. 377.2 = CS 10 - prefab. slab C1

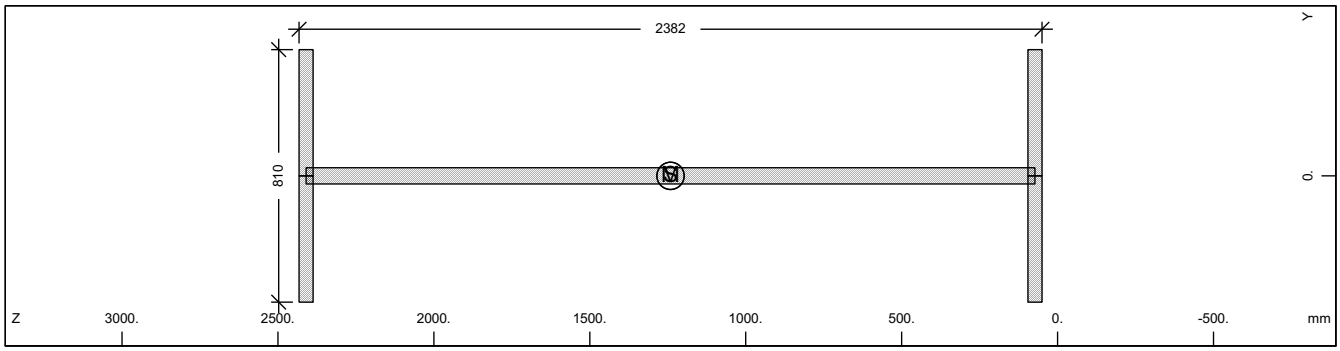

Cross section No. 377

Static properties of cross section

Mat	A[cm2]	Ay/Az/Ayz	Iy/Iz/Iyz	ys/zs	modules	gam
NoR	It[cm4]	[cm2]	[cm4]	[mm]	[N/mm2]	[kN/m]
1	1944.41	607.50	15489753.	0.0	210000	15.26
	6270.0	1154.13	398580.9	1241.2	80769	

Additional static properties of cross section

Alfa-T	ymin	zmin	hymin	AK	MB	Tau-T	Tau-Vy
	ymax	zmax	hzmin	AB		Tau-B	Tau-Vz
[1/°K]	[mm]	[mm]	[mm]	[cm2]		[1/m3]	[1/m2]
1.2E-05	-405.0	-1191.2		1.174E+03		3.275E+02	2.058E+01
	405.0	1191.2				1.255E+02	9.697E+00

Section values for warping

Wmin[cm2]	Wmax[cm2]	CM[cm6]	CMS[cm4]	ASwyy[cm6]	ASwzz[cm6]	ry[mm]	rz[mm]
-4733.09	4733.095443716443.		8297082.1	-1.88	-73.23	0.0	0.0

SOFiSTiK AG - www.sofistik.de

Composite bridge 38+50+38, b=14.25m, 2x2HL1100R HISTAR460 , slab 0.30m C30/37

Design values of cross section

Mat NoR	A[cm2] It[cm4]	Ay/Az/Ayz [cm2]	Iy/Iz/Iyz [cm4]	ys/zs [mm]	modules [N/mm2]	gam [kN/m]
1	1944.41	607.50	15489753.	0.0	182609	15.26
	6270.0	1154.13	398580.9	1241.2	70234	

Design forces and moments
(C/E = characteristic plastic/elastic, D=plast.Design, F=elast. Design)

	N[kN]	Vy[kN]	Vz[kN]	Mt[kNm]	My[kNm]	Mz[kNm]	y[mm]	z[mm]	BUCK
C	65137.7	14099.76	23507.53	928.44	52332.32	5474.67	0.0	1241.	c c
C	0.0				0.00	0.00	0.0	0.0	COMB
E	65137.7	9399.84	19945.13	590.49	43563.01	3296.90	0.0	1241.	
D	56641.5	12260.66	20441.34	807.34	45506.36	4760.58	0.0	1241.	
D	0.0				0.00	0.00	0.0	0.0	COMB
F	56641.5	8173.78	17343.59	513.47	37880.88	2866.87	0.0	1241.	

Additional Design Data

M	periphery-O/-I [m2/m] [m2/m]	deff [mm]	t-min [mm]	t-max [mm]	SMP [o/o]	thet-p [tm2/m]	thet-y [tm2/m]	thet-z [tm2/m]	thet-yz [tm2/m]
	7.915	49.1	45.0	52.0	0.0	1.247	1.216	0.031	

Cross section No. 377.3 = CS 20 - in-situ conc:C2

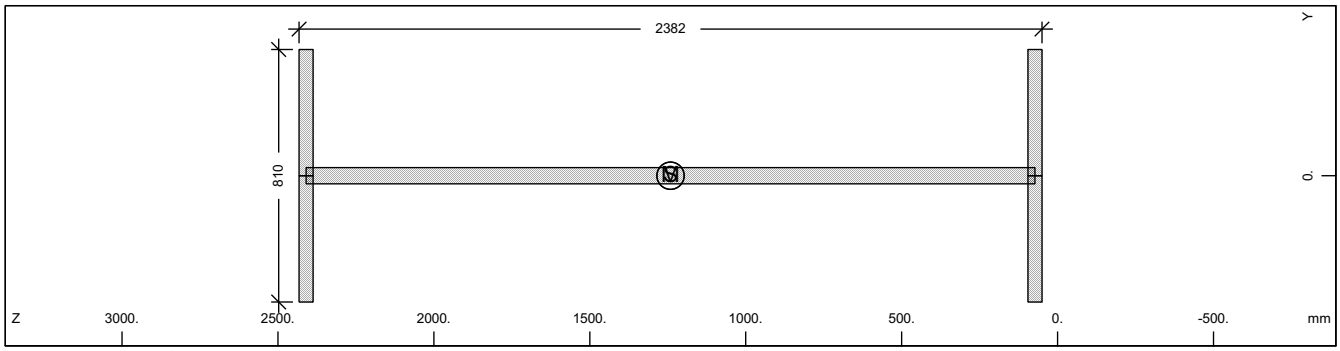

Cross section No. 377

Static properties of cross section

Mat NoR	A[cm2] It[cm4]	Ay/Az/Ayz [cm2]	Iy/Iz/Iyz [cm4]	ys/zs [mm]	modules [N/mm2]	gam [kN/m]
1	1944.41	607.50	15489753.	0.0	210000	15.26
	6270.0	1154.13	398580.9	1241.2	80769	

Additional static properties of cross section

Alfa-T [1/°K]	ymin ymax [mm]	zmin zmax [mm]	hymin hzmin [mm]	AK AB [cm2]	MB	Tau-T Tau-B [1/m3]	Tau-Vy Tau-Vz [1/m2]
1.2E-05	-405.0	-1191.2		1.174E+03		3.275E+02	2.058E+01
	405.0	1191.2				1.255E+02	9.697E+00

Section values for warping

Wmin[cm2]	Wmax[cm2]	CM[cm6]	CMS[cm4]	ASwyy[cm6]	ASwzz[cm6]	ry[mm]	rz[mm]
-4733.09	4733.095443716443.		8297082.1	-1.88	-73.23	0.0	0.0

Design values of cross section

Mat NoR	A[cm2] It[cm4]	Ay/Az/Ayz [cm2]	Iy/Iz/Iyz [cm4]	ys/zs [mm]	modules [N/mm2]	gam [kN/m]
1	1944.41	607.50	15489753.	0.0	182609	15.26
	6270.0	1154.13	398580.9	1241.2	70234	

Design forces and moments
(C/E = characteristic plastic/elastic, D=plast.Design, F=elast. Design)

	N[kN]	Vy[kN]	Vz[kN]	Mt[kNm]	My[kNm]	Mz[kNm]	y[mm]	z[mm]	BUCK
C	65137.7	14099.76	23507.53	928.44	52332.32	5474.67	0.0	1241.	c c
C	0.0				0.00	0.00	0.0	0.0	COMB
E	65137.7	9399.84	19945.13	590.49	43563.01	3296.90	0.0	1241.	

SOFiSTiK AG - www.sofistik.de

Composite bridge 38+50+38, b=14.25m, 2x2HL1100R HISTAR460 , slab 0.30m C30/37

Design forces and moments
(C/E = characteristic plastic/elastic, D=plast.Design, F=elast. Design)

	N[kN]	Vy[kN]	Vz[kN]	Mt[kNm]	My[kNm]	Mz[kNm]	y[mm]	z[mm]	BUCK
D	56641.5	12260.66	20441.34	807.34	45506.36	4760.58	0.0	1241.	
D	0.0				0.00	0.00	0.0	0.0	COMB
F	56641.5	8173.78	17343.59	513.47	37880.88	2866.87	0.0	1241.	

Additional Design Data

M	periphery-O/-I [m2/m]	[m2/m]	deff [mm]	t-min [mm]	t-max [mm]	SMP [o/o]	thet-p [tm2/m]	thet-y [tm2/m]	thet-z [tm2/m]	thet-yz [tm2/m]
	7.915		49.1	45.0	52.0	0.0	1.247	1.216	0.031	

Cross section No. 377.4 = CS 21 - reinf active:C2

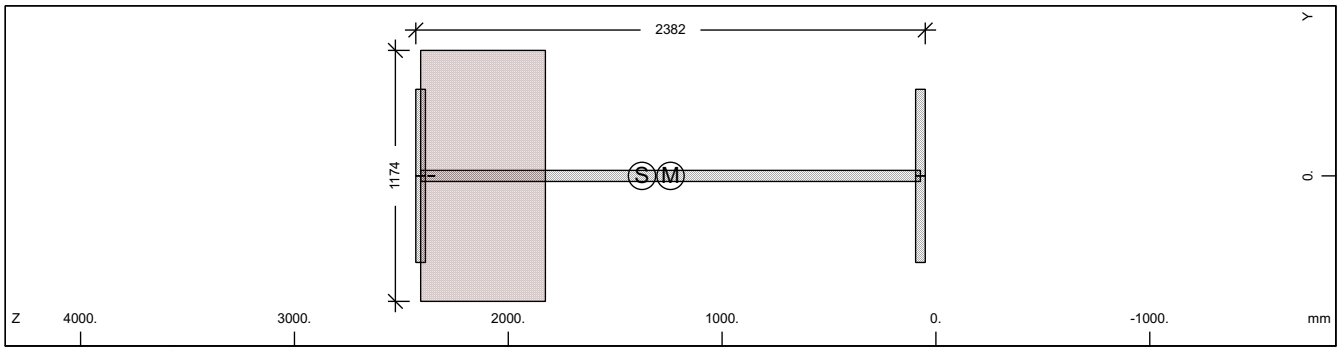

Cross section No. 377

Static properties of cross section

Mat NoR	A[cm2] It[cm4]	Ay/Az/Ayz [cm2]	Iy/Iz/Iyz [cm4]	ys/zs [mm]	modules [N/mm2]	gam [kN/m]
1	2292.87	607.50	17863748.	0.0	210000	32.38
	6270.0	1080.33	398580.9	1374.5	80769	

Additional static properties of cross section

Alfa-T [1/°K]	ymin ymax [mm]	zmin zmax [mm]	hymin hzmin [mm]	AK AB [cm2]	MB	Tau-T Tau-B [1/m3]	Tau-Vy Tau-Vz [1/m2]
1.2E-05	-587.0	-1324.5		4.607E+03		3.697E+00	2.058E+01
	587.0	1057.8		6.848E+03		1.255E+02	9.854E+00

Section values for warping

Wmin[cm2]	Wmax[cm2]	CM[cm6]	CMS[cm4]	ASwyy[cm6]	ASwzz[cm6]	ry[mm]	rz[mm]
-4733.09	4733.095443715978.		8297081.3	-0.68	-30.35	0.0	7.0

Partial cross sections

Mat NoR	A[cm2] It[cm4]	Ay/Az/Ayz [cm2]	Iy/Iz/Iyz [cm4]	ys/zs [mm]	modules [N/mm2]	gam [kN/m]
1	1944.41	607.50	15489753.	0.0	210000	15.26
	15875.6	1074.30	398580.9	1241.2	80769	
25	6848.26		1941886.2	0.0	10667	17.12
	31462655.	109.67	0.0	2118.2	4444	
210	0.64	0.00	0.0	0.0	200000	0.00
	2.2	0.00	0.0	2359.8	76923	

Design values of cross section

Mat NoR	A[cm2] It[cm4]	Ay/Az/Ayz [cm2]	Iy/Iz/Iyz [cm4]	ys/zs [mm]	modules [N/mm2]	gam [kN/m]
1	2211.71	607.50	17375405.	0.0	182609	32.38
	6270.0	1078.92	398580.9	1347.2	70234	

Design forces and moments
(C/E = characteristic plastic/elastic, D=plast.Design, F=elast. Design)

	N[kN]	Vy[kN]	Vz[kN]	Mt[kNm]	My[kNm]	Mz[kNm]	y[mm]	z[mm]	BUCK
C	65169.9	14118.33	35269.05	7569.01	52368.27	8586.04	6.2	1242.	c c
C	-4613.7				52673.75	0.00	0.0	1375.	COMB

SOFiSTiK AG - www.sofistik.de

Composite bridge 38+50+38, b=14.25m, 2x2HL1100R HISTAR460 , slab 0.30m C30/37

Design forces and moments
(C/E = characteristic plastic/elastic, D=plast.Design, F=elast. Design)

	N[kN]	Vy[kN]	Vz[kN]	Mt[kNm]	My[kNm]	Mz[kNm]	y[mm]	z[mm]	BUCK
C	-10272.4				0.00	8489.87	0.0	0.0	COMB
C	-85714.7	14118.33	35269.05	7569.01	-56886.4	-8457.81	-6.2	1731.	
C	-15931.1				-67951.9	0.00	0.0	1375.	COMB
C	-10272.4				0.00	-8489.87	0.0	0.0	COMB
E	76811.2	9399.84	19628.00	4462.48	45181.62	3296.90	0.0	1375.	
E	-76811.2	9399.84	19628.00	4462.48	-45181.6	-3296.90	0.0	1375.	
D	56669.5	12276.81	28376.06	5235.95	45537.63	6820.04	4.8	1242.	
D	-4011.9				45803.27	0.00	0.0	1375.	COMB
D	-6848.3				0.00	6770.77	0.0	0.0	COMB
D	-70366.0	12276.81	28376.06	5235.95	-48124.3	-6754.34	-4.8	1649.	
D	-9684.6				-55988.7	0.00	0.0	1375.	COMB
D	-6848.3				0.00	-6770.77	0.0	0.0	COMB
F	66792.3	8173.78	17067.82	2974.98	39288.36	2866.87	0.0	1375.	
F	-66792.3	8173.78	17067.82	2974.98	-39288.4	-2866.87	0.0	1375.	

Additional Design Data

M	periphery-O/-I [m2/m]	[m2/m]	deff [mm]	t-min [mm]	t-max [mm]	SMP [o/o]	thet-p [tm2/m]	thet-y [tm2/m]	thet-z [tm2/m]	thet-yz [tm2/m]
	9.085		50.5	32.0	583.3	0.0	1.916	1.885	0.031	
1	7.915		49.1	45.0	52.0	0.0	1.247	1.216	0.031	
25	1.167		1174.0			0.0	0.049	0.049		
**	0.004		32.0			0.0	0.000		0.000	

Cross section No. 377.5 = CS 30 - in-situ conc:C3

Cross section No. 378 - VFT (353)

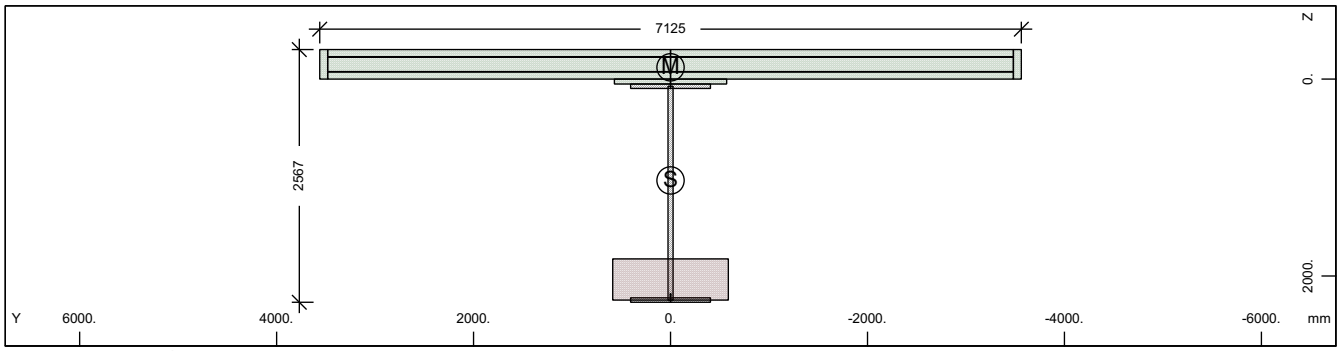

Cross section No. 378 - VFT (353)

Static properties of cross section

Mat NoR	A[cm2] It[cm4]	Ay/Az/Ayz [cm2]	Iy/Iz/Iyz [cm4]	ys/zs [mm]	y/z-sc [mm]	modules [N/mm2]	gam [kN/m]
1	2524.74	363.57	21731135.	0.0	0.0	210000	81.72
	6270.0	735.70	17224546.	1029.5	-119.7	80769	

Additional static properties of cross section

Alfa-T [1/°K]	ymin ymax [mm]	zmin zmax [mm]	hymin hzmin [mm]	AK AB [cm2]	MB	Tau-T Tau-B [1/m3]	Tau-Vy Tau-Vz [1/m2]
1.2E-05	-3562.5	-1329.5		3.311E+03		5.145E+00	3.351E+01
	3562.5	1237.5		2.685E+04		1.255E+02	1.914E+01

Section values for warping

Wmin[cm2]	Wmax[cm2]	CM[cm6]	CMS[cm4]	ASwyy[cm6]	ASwzz[cm6]	ry[mm]	rz[mm]
-9575.01	9575.01	1.231E+10	2496955.4	404.55	510.40	0.0	1425.5

SOFiSTiK AG - www.sofistik.de

Composite bridge 38+50+38, b=14.25m, 2x2HL1100R HISTAR460 , slab 0.30m C30/37

Partial cross sections

Mat NoR	A[cm2] It[cm4]	Ay/Az/Ayz [cm2]	Iy/Iz/Iyz [cm4]	ys/zs [mm]	modules [N/mm2]	gam [kN/m]
1	1858.43	0.12	13037682.	0.0	210000	14.59
	15100.7	462.23	398580.9	1158.5	80769	
25	4907.07		714410.8	0.0	10667	12.27
	22544302.	25.43	0.0	2035.5	4444	
210	0.64	0.00	0.0	0.0	200000	0.00
	2.2	0.00	0.0	2194.5	76923	
31	21945.00	17426.79	170028.4	0.0	0	54.86
	6417251.4	12291.54	904880243.	-145.5	0	
300	437.28	381.62	24596.8	0.0	200000	0.00
	14.4	285.14	17667259.	-150.0	76923	

Design values of cross section

Mat NoR	A[cm2] It[cm4]	Ay/Az/Ayz [cm2]	Iy/Iz/Iyz [cm4]	ys/zs [mm]	modules [N/mm2]	gam [kN/m]
1	2466.59	363.57	21120209.	0.0	182609	81.72
	6270.0	734.86	17224546.	1005.8	70234	

Design forces and moments
(C/E = characteristic plastic/elastic, D=plast.Design, F=elast. Design)

	N[kN]	Vy[kN]	Vz[kN]	Mt[kNm]	My[kNm]	Mz[kNm]	y[mm]	z[mm]	BUCK
C	84153.4	62950.67	59203.53	104232.5	84897.74	102883.7	26.9	-49.8	c c
C	-83172.2				150533.8	0.00	0.0	1029.	COMB
C	-40278.1				0.00	103012.4	0.0	0.0	COMB
C	-154990.	62950.67	59203.52	104232.5	-87893.0	-102488.	-26.9	954.5	
C	2616.0				-87991.2	0.00	0.0	1029.	COMB
C	-40278.1				0.00	-103012.	0.0	0.0	COMB
E	84578.9	8614.75	15081.64	3207.10	58828.06	25974.08	0.0	1029.	
E	-84578.9	8614.75	15081.64	3207.10	-58828.1	-25974.1	0.0	1029.	
D	73176.8	47392.91	44531.18	69687.01	71840.09	77428.08	20.0	-53.3	
D	-58965.8				115204.3	0.00	0.0	1029.	COMB
D	-26852.1				0.00	77500.40	0.0	0.0	COMB
D	-120401.	47392.91	44531.18	69687.02	-73052.3	-77231.4	-20.0	856.0	
D	5261.7				-73509.2	0.00	0.0	1029.	COMB
D	-26852.1				0.00	-77500.4	0.0	0.0	COMB
F	73546.9	7491.09	13114.47	2138.07	51154.83	22586.15	0.0	1029.	
F	-73546.9	7491.09	13114.47	2138.07	-51154.8	-22586.2	0.0	1029.	

Additional Design Data

M	periphery-O/-I [m2/m]	[m2/m]	deff [mm]	t-min [mm]	t-max [mm]	SMP [o/o]	thet-p [tm2/m]	thet-y [tm2/m]	thet-z [tm2/m]	thet-yz [tm2/m]
	52.806		9.6	3.1	418.0	0.0	29.450	6.797	22.653	
1	7.584		49.0	45.0	52.0	0.0	1.055	1.023	0.031	
25	0.836		1174.0			0.0	0.018	0.018		
**	0.004		32.0			0.0	0.000		0.000	
31	16.530		265.5	50.0	300.0	0.0	22.626	0.004	22.622	
**	27.852		3.1	3.1	3.1	0.0	0.000	0.000	0.000	

SOFiSTiK AG - www.sofistik.de

Composite bridge 38+50+38, b=14.25m, 2x2HL1100R HISTAR460 , slab 0.30m C30/37

Cross section No. 378.1 = CS 1 - steel alone

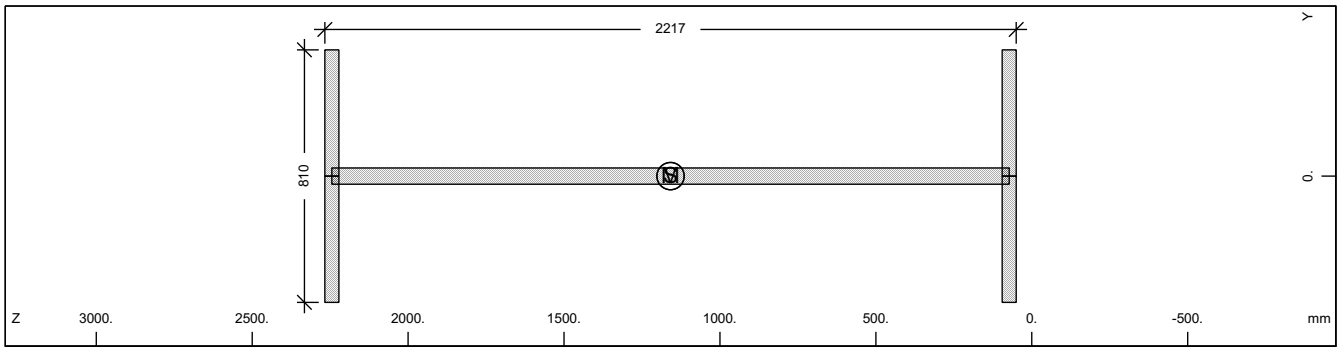

Cross section No. 378

Static properties of cross section

Mat / NoR	A[cm2] / It[cm4]	Ay/Az/Ayz [cm2]	Iy/Iz/Iyz [cm4]	ys/zs [mm]	modules [N/mm2]	gam [kN/m]
1	1858.43	607.50	13037682.	0.0	210000	14.59
	6270.0	1071.13	398580.9	1158.5	80769	

Additional static properties of cross section

Alfa-T [1/°K]	ymin / ymax [mm]	zmin / zmax [mm]	hymin / hzmin [mm]	AK / AB [cm2]	MB	Tau-T / Tau-B [1/m3]	Tau-Vy / Tau-Vz [1/m2]
1.2E-05	-405.0	-1108.5		1.117E+03		3.444E+02	2.058E+01
	405.0	1108.5				1.255E+02	1.036E+01

Section values for warping

Wmin[cm2]	Wmax[cm2]	CM[cm6]	CMS[cm4]	ASwyy[cm6]	ASwzz[cm6]	ry[mm]	rz[mm]
-4398.26	4398.264	700752460.	7164687.7	-4.99	-163.29	0.0	0.0

Design values of cross section

Mat / NoR	A[cm2] / It[cm4]	Ay/Az/Ayz [cm2]	Iy/Iz/Iyz [cm4]	ys/zs [mm]	modules [N/mm2]	gam [kN/m]
1	1858.43	607.50	13037682.	0.0	182609	14.59
	6270.0	1071.13	398580.9	1158.5	70234	

Design forces and moments
(C/E = characteristic plastic/elastic, D=plast.Design, F=elast. Design)

	N[kN]	Vy[kN]	Vz[kN]	Mt[kNm]	My[kNm]	Mz[kNm]	y[mm]	z[mm]	BUCK
C	62257.4	14099.76	21844.55	885.20	47066.15	5437.22	0.0	1158.	c c
C	0.0				0.00	0.00	0.0	0.0	COMB
E	62257.4	9399.84	18666.12	561.66	39401.59	3296.90	0.0	1158.	
D	54136.8	12260.66	18995.26	769.74	40927.09	4728.02	0.0	1158.	
D	0.0				0.00	0.00	0.0	0.0	COMB
F	54136.8	8173.78	16231.41	488.40	34262.25	2866.87	0.0	1158.	

Additional Design Data

M	periphery-O/-I [m2/m]	[m2/m]	deff [mm]	t-min [mm]	t-max [mm]	SMP [o/o]	thet-p [tm2/m]	thet-y [tm2/m]	thet-z [tm2/m]	thet-yz [tm2/m]
	7.584		49.0	45.0	52.0	0.0	1.055	1.023	0.031	

SOFiSTiK AG - www.sofistik.de

Composite bridge 38+50+38, b=14.25m, 2x2HL1100R HISTAR460 , slab 0.30m C30/37

Cross section No. 378.2 = CS 10 - prefab. slab C1

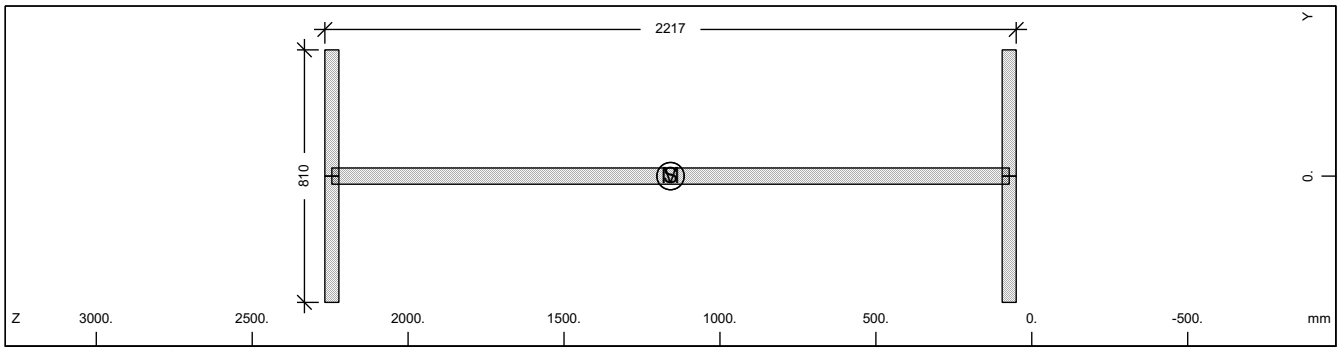

Cross section No. 378

Static properties of cross section

Mat NoR	A[cm2] It[cm4]	Ay/Az/Ayz [cm2]	Iy/Iz/Iyz [cm4]	ys/zs [mm]	modules [N/mm2]	gam [kN/m]
1	1858.43	607.50	13037682.	0.0	210000	14.59
	6270.0	1071.13	398580.9	1158.5	80769	

Additional static properties of cross section

Alfa-T [1/°K]	ymin ymax [mm]	zmin zmax [mm]	hymin hzmin [mm]	AK AB [cm2]	MB	Tau-T Tau-B [1/m3]	Tau-Vy Tau-Vz [1/m2]
1.2E-05	-405.0	-1108.5		1.117E+03		3.444E+02	2.058E+01
	405.0	1108.5				1.255E+02	1.036E+01

Section values for warping

Wmin[cm2]	Wmax[cm2]	CM[cm6]	CMS[cm4]	ASwyy[cm6]	ASwzz[cm6]	ry[mm]	rz[mm]
-4398.26	4398.264	700752460.	7164687.7	-4.99	-163.29	0.0	0.0

Design values of cross section

Mat NoR	A[cm2] It[cm4]	Ay/Az/Ayz [cm2]	Iy/Iz/Iyz [cm4]	ys/zs [mm]	modules [N/mm2]	gam [kN/m]
1	1858.43	607.50	13037682.	0.0	182609	14.59
	6270.0	1071.13	398580.9	1158.5	70234	

Design forces and moments
(C/E = characteristic plastic/elastic, D=plast.Design, F=elast. Design)

	N[kN]	Vy[kN]	Vz[kN]	Mt[kNm]	My[kNm]	Mz[kNm]	y[mm]	z[mm]	BUCK
C	62257.4	14099.76	21844.55	885.20	47066.15	5437.22	0.0	1158.	c c
C	0.0				0.00	0.00	0.0	0.0	COMB
E	62257.4	9399.84	18666.12	561.66	39401.59	3296.90	0.0	1158.	
D	54136.8	12260.66	18995.26	769.74	40927.09	4728.02	0.0	1158.	
D	0.0				0.00	0.00	0.0	0.0	COMB
F	54136.8	8173.78	16231.41	488.40	34262.25	2866.87	0.0	1158.	

Additional Design Data

M	periphery-O/-I [m2/m] [m2/m]	deff [mm]	t-min [mm]	t-max [mm]	SMP [o/o]	thet-p [tm2/m]	thet-y [tm2/m]	thet-z [tm2/m]	thet-yz [tm2/m]
	7.584	49.0	45.0	52.0	0.0	1.055	1.023	0.031	

SOFiSTiK AG - www.sofistik.de

Composite bridge 38+50+38, b=14.25m, 2x2HL1100R HISTAR460 , slab 0.30m C30/37

Cross section No. 378.3 = CS 20 - in-situ conc:C2

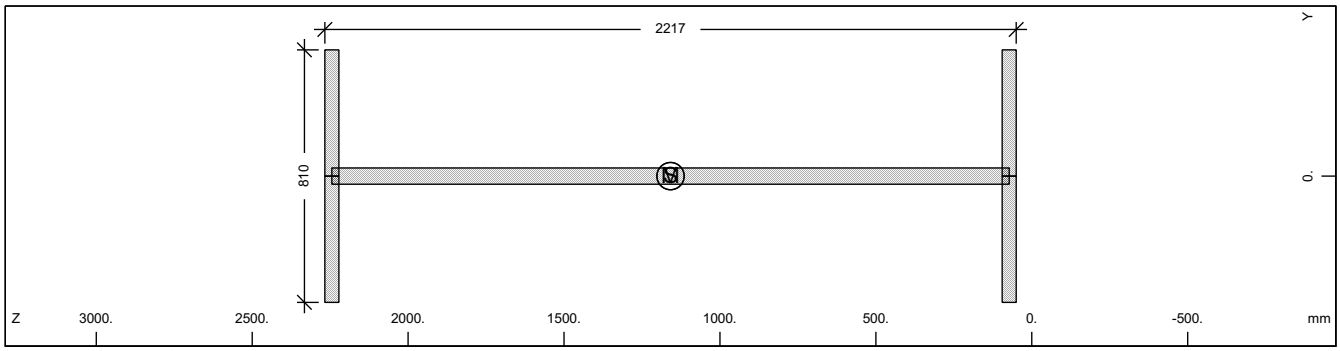

Cross section No. 378

Static properties of cross section

Mat NoR	A[cm2] It[cm4]	Ay/Az/Ayz [cm2]	Iy/Iz/Iyz [cm4]	ys/zs [mm]	modules [N/mm2]	gam [kN/m]
1	1858.43	607.50	13037682.	0.0	210000	14.59
	6270.0	1071.13	398580.9	1158.5	80769	

Additional static properties of cross section

Alfa-T [1/°K]	ymin ymax [mm]	zmin zmax [mm]	hymin hzmin [mm]	AK AB [cm2]	MB	Tau-T Tau-B [1/m3]	Tau-Vy Tau-Vz [1/m2]
1.2E-05	-405.0	-1108.5		1.117E+03		3.444E+02	2.058E+01
	405.0	1108.5				1.255E+02	1.036E+01

Section values for warping

Wmin[cm2]	Wmax[cm2]	CM[cm6]	CMS[cm4]	ASwyy[cm6]	ASwzz[cm6]	ry[mm]	rz[mm]
-4398.26	4398.264	700752460.	7164687.7	-4.99	-163.29	0.0	0.0

Design values of cross section

Mat NoR	A[cm2] It[cm4]	Ay/Az/Ayz [cm2]	Iy/Iz/Iyz [cm4]	ys/zs [mm]	modules [N/mm2]	gam [kN/m]
1	1858.43	607.50	13037682.	0.0	182609	14.59
	6270.0	1071.13	398580.9	1158.5	70234	

Design forces and moments
(C/E = characteristic plastic/elastic, D=plast.Design, F=elast. Design)

	N[kN]	Vy[kN]	Vz[kN]	Mt[kNm]	My[kNm]	Mz[kNm]	y[mm]	z[mm]	BUCK
C	62257.4	14099.76	21844.55	885.20	47066.15	5437.22	0.0	1158.	c c
C	0.0				0.00	0.00	0.0	0.0	COMB
E	62257.4	9399.84	18666.12	561.66	39401.59	3296.90	0.0	1158.	
D	54136.8	12260.66	18995.26	769.74	40927.09	4728.02	0.0	1158.	
D	0.0				0.00	0.00	0.0	0.0	COMB
F	54136.8	8173.78	16231.41	488.40	34262.25	2866.87	0.0	1158.	

Additional Design Data

M	periphery-O/-I [m2/m] [m2/m]	deff [mm]	t-min [mm]	t-max [mm]	SMP [o/o]	thet-p [tm2/m]	thet-y [tm2/m]	thet-z [tm2/m]	thet-yz [tm2/m]
	7.584	49.0	45.0	52.0	0.0	1.055	1.023	0.031	

SOFiSTiK AG - www.sofistik.de

Composite bridge 38+50+38, b=14.25m, 2x2HL1100R HISTAR460 , slab 0.30m C30/37

Cross section No. 378.4 = CS 21 - reinf active:C2

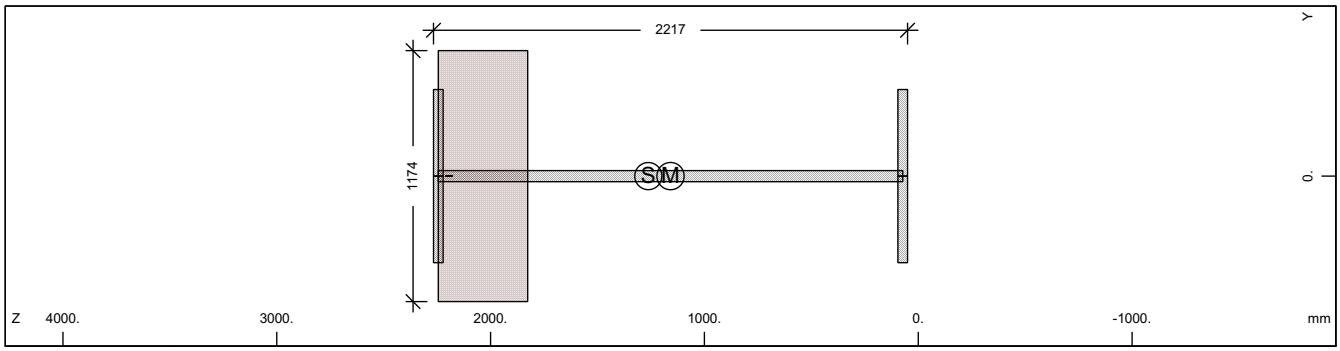

Cross section No. 378

Static properties of cross section

Mat NoR	A[cm2] It[cm4]	Ay/Az/Ayz [cm2]	Iy/Iz/Iyz [cm4]	ys/zs [mm]	modules [N/mm2]	gam [kN/m]
1	2108.29	607.50	14769624.	0.0	210000	26.86
	6270.0	1027.68	398580.9	1262.5	80769	

Additional static properties of cross section

Alfa-T [1/°K]	ymin ymax [mm]	zmin zmax [mm]	hymin hzmin [mm]	AK AB [cm2]	MB	Tau-T Tau-B [1/m3]	Tau-Vy Tau-Vz [1/m2]
1.2E-05	-587.0	-1212.5		3.311E+03		5.145E+00	2.058E+01
	587.0	1004.5		4.907E+03		1.255E+02	1.044E+01

Section values for warping

Wmin[cm2]	Wmax[cm2]	CM[cm6]	CMS[cm4]	ASwyy[cm6]	ASwzz[cm6]	ry[mm]	rz[mm]
-4398.26	4398.26	4700752460.	7164687.7	-2.05	-76.01	0.0	12.4

Partial cross sections

Mat NoR	A[cm2] It[cm4]	Ay/Az/Ayz [cm2]	Iy/Iz/Iyz [cm4]	ys/zs [mm]	modules [N/mm2]	gam [kN/m]
1	1858.43	607.50	13037682.	0.0	210000	14.59
	15100.7	1024.30	398580.9	1158.5	80769	
25	4907.07		714410.8	0.0	10667	12.27
	22544302.	61.44	0.0	2035.5	4444	
210	0.64	0.00	0.0	0.0	200000	0.00
	2.2	0.00	0.0	2194.5	76923	

Design values of cross section

Mat NoR	A[cm2] It[cm4]	Ay/Az/Ayz [cm2]	Iy/Iz/Iyz [cm4]	ys/zs [mm]	modules [N/mm2]	gam [kN/m]
1	2050.13	607.50	14403774.	0.0	182609	26.86
	6270.0	1026.89	398580.9	1240.5	70234	

Design forces and moments
(C/E = characteristic plastic/elastic, D=plast.Design, F=elast. Design)

	N[kN]	Vy[kN]	Vz[kN]	Mt[kNm]	My[kNm]	Mz[kNm]	y[mm]	z[mm]	BUCK
C	62289.5	14118.33	30403.08	5645.63	47099.45	7650.93	4.8	1160.	c c
C	-3590.6				47284.47	0.00	0.0	1262.	COMB
C	-7360.6				0.00	7597.81	0.0	0.0	COMB
C	-77010.7	14118.33	30403.08	5645.63	-49771.0	-7580.11	-4.8	1547.	
C	-11130.6				-58664.2	0.00	0.0	1262.	COMB
C	-7360.6				0.00	-7597.81	0.0	0.0	COMB
E	70627.7	9399.84	18523.78	3207.07	40807.76	3296.90	0.0	1262.	
E	-70627.7	9399.84	18523.78	3207.07	-40807.8	-3296.90	0.0	1262.	
D	54164.8	12276.81	24794.66	3944.92	40956.04	6195.67	3.7	1160.	
D	-3122.3				41116.93	0.00	0.0	1262.	COMB
D	-4907.1				0.00	6168.47	0.0	0.0	COMB
D	-63978.9	12276.81	24794.66	3944.92	-42475.2	-6159.40	-3.7	1476.	
D	-6691.9				-48703.4	0.00	0.0	1262.	COMB
D	-4907.1				0.00	-6168.47	0.0	0.0	COMB

SOFiSTiK AG - www.sofistik.de

Composite bridge 38+50+38, b=14.25m, 2x2HL1100R HISTAR460 , slab 0.30m C30/37

Design forces and moments
(C/E = characteristic plastic/elastic, D=plast.Design, F=elast. Design)

	N[kN]	Vy[kN]	Vz[kN]	Mt[kNm]	My[kNm]	Mz[kNm]	y[mm]	z[mm]	BUCK
F	61415.4	8173.78	16107.64	2138.04	35485.01	2866.87	0.0	1262.	
F	-61415.4	8173.78	16107.64	2138.04	-35485.0	-2866.87	0.0	1262.	

Additional Design Data

M	periphery-O/-I [m2/m]	[m2/m]	deff [mm]	t-min [mm]	t-max [mm]	SMP [o/o]	thet-p [tm2/m]	thet-y [tm2/m]	thet-z [tm2/m]	thet-yz [tm2/m]
	8.424		50.1	32.0	418.0	0.0	1.585	1.554	0.031	
1	7.584		49.0	45.0	52.0	0.0	1.055	1.023	0.031	
25	0.836		1174.0			0.0	0.018	0.018		
**	0.004		32.0			0.0	0.000		0.000	

Cross section No. 378.5 = CS 30 - in-situ conc:C3

Cross section No. 379 - VFT (353)

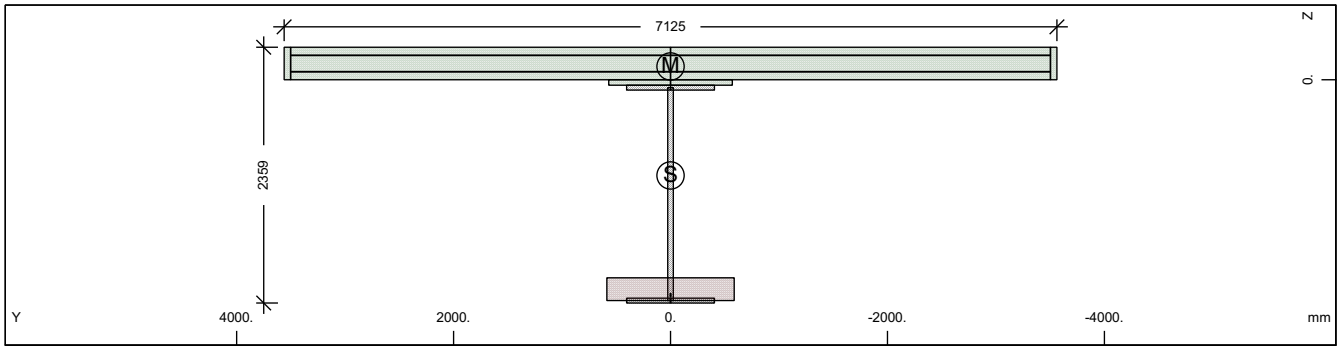

Cross section No. 379 - VFT (353)

Static properties of cross section

Mat NoR	A[cm2] It[cm4]	Ay/Az/Ayz [cm2]	Iy/Iz/Iyz [cm4]	ys/zs [mm]	y/z-sc [mm]	modules [N/mm2]	gam [kN/m]
1	2294.95	365.49	16707340.	0.0	0.0	210000	74.76
	6270.0	636.02	17535704.	882.6	-122.6	80769	

Additional static properties of cross section

Alfa-T [1/°K]	ymin ymax [mm]	zmin zmax [mm]	hymin hzmin [mm]	AK AB [cm2]	MB	Tau-T Tau-B [1/m3]	Tau-Vy Tau-Vz [1/m2]
1.2E-05	-3562.5	-1182.6		1.680E+03		1.014E+01	3.332E+01
	3562.5	1176.3		2.441E+04		1.255E+02	2.212E+01

Section values for warping

Wmin[cm2]	Wmax[cm2]	CM[cm6]	CMS[cm4]	ASwyy[cm6]	ASwzz[cm6]	ry[mm]	rz[mm]
-8743.81	8743.81	1.046E+10	1830007.3	236.18	225.02	0.0	1086.1

Partial cross sections

Mat NoR	A[cm2] It[cm4]	Ay/Az/Ayz [cm2]	Iy/Iz/Iyz [cm4]	ys/zs [mm]	modules [N/mm2]	gam [kN/m]
1	1750.20	0.11	10310821.	0.0	210000	13.74
	14125.1	366.92	398580.9	1054.4	80769	
25	2463.55		90399.7	0.0	10667	6.16
	11318175.	4.67	0.0	1931.4	4444	
210	0.64	0.00	0.0	0.0	200000	0.00
	2.2	0.00	0.0	1986.3	76923	
31	21945.00	16992.23	170028.4	0.0	0	54.86
	6417251.4	11911.15	904880243.	-145.5	0	
300	439.96	383.64	24747.5	0.0	200000	0.00
	14.5	281.76	17993975.	-150.0	76923	

SOFiSTiK AG - www.sofistik.de

Composite bridge 38+50+38, b=14.25m, 2x2HL1100R HISTAR460 , slab 0.30m C30/37

Design values of cross section

Mat NoR	A[cm2] It[cm4]	Ay/Az/Ayz [cm2]	Iy/Iz/Iyz [cm4]	ys/zs [mm]	modules [N/mm2]	gam [kN/m]
1	2265.75	365.49	16380940.	0.0	182609	74.76
	6270.0	635.46	17535703.	869.1	70234	

Design forces and moments
(C/E = characteristic plastic/elastic, D=plast.Design, F=elast. Design)

	N[kN]	Vy[kN]	Vz[kN]	Mt[kNm]	My[kNm]	Mz[kNm]	y[mm]	z[mm]	BUCK
C	80661.6	63028.01	53078.42	101811.5	73473.36	102088.7	28.4	-128.	c c
C	-81814.0				131721.6	0.00	0.0	882.6	COMB
C	-36612.8				0.00	102357.3	0.0	0.0	COMB
C	-146727.	63028.01	53078.41	101811.5	-70733.3	-101879.	-28.4	636.3	
C	8588.3				-71791.9	0.00	0.0	882.6	COMB
C	-36612.8				0.00	-102357.	0.0	0.0	COMB
E	76880.8	8663.89	13052.93	1626.83	47582.92	26282.28	0.0	882.6	
E	-76880.8	8663.89	13052.93	1626.83	-47582.9	-26282.3	0.0	882.6	
D	70140.5	47460.16	40023.04	68062.01	62682.20	77002.82	20.1	-73.5	
D	-57784.8				100808.1	0.00	0.0	882.6	COMB
D	-24408.6				0.00	77149.00	0.0	0.0	COMB
D	-114184.	47460.16	40023.04	68062.02	-59527.7	-76903.8	-20.1	586.6	
D	8967.7				-60854.9	0.00	0.0	882.6	COMB
D	-24408.6				0.00	-77149.0	0.0	0.0	COMB
F	66852.9	7533.81	11350.37	1084.56	41376.45	22854.15	0.0	882.6	
F	-66852.9	7533.81	11350.37	1084.56	-41376.4	-22854.2	0.0	882.6	

Additional Design Data

M	periphery-O/-I [m2/m]	[m2/m]	deff [mm]	t-min [mm]	t-max [mm]	SMP [o/o]	thet-p [tm2/m]	thet-y [tm2/m]	thet-z [tm2/m]	thet-yz [tm2/m]
	52.144		8.8	3.1	300.0	0.0	26.957	4.304	22.653	
1	7.168		48.8	45.0	52.0	0.0	0.841	0.809	0.031	
25	0.420		1174.0			0.0	0.002	0.002		
**	0.004		32.0			0.0	0.000	0.000	0.000	
31	16.530		265.5	50.0	300.0	0.0	22.626	0.004	22.622	
**	28.023		3.1	3.1	3.1	0.0	0.000	0.000	0.000	

Cross section No. 379.1 = CS 1 - steel alone

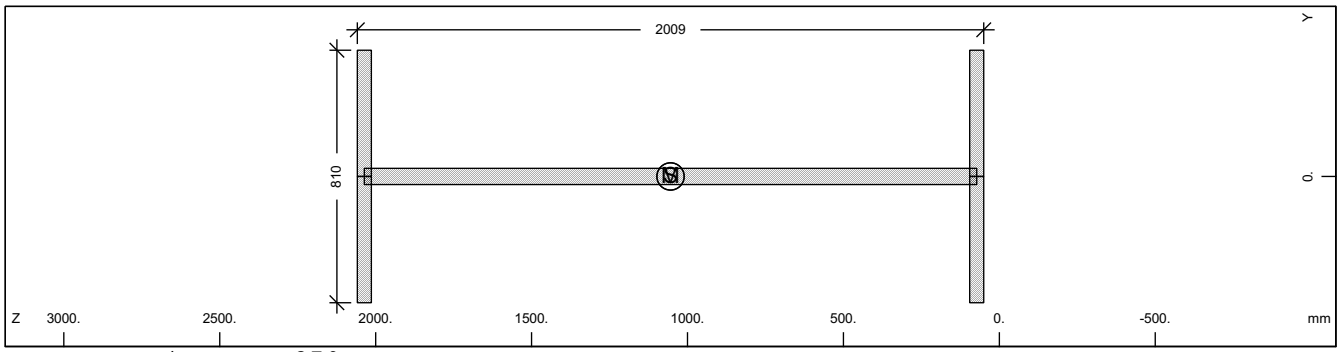

Cross section No. 379

Static properties of cross section

Mat NoR	A[cm2] It[cm4]	Ay/Az/Ayz [cm2]	Iy/Iz/Iyz [cm4]	ys/zs [mm]	modules [N/mm2]	gam [kN/m]
1	1750.20	607.50	10310821.	0.0	210000	13.74
	6270.0	965.97	398580.9	1054.4	80769	

Additional static properties of cross section

Alfa-T [1/°K]	ymin ymax [mm]	zmin zmax [mm]	hymin hzmin [mm]	AK AB [cm2]	MB	Tau-T Tau-B [1/m3]	Tau-Vy Tau-Vz [1/m2]
1.2E-05	-405.0	-1004.4		1.045E+03		3.681E+02	2.058E+01
	405.0	1004.4				1.255E+02	1.135E+01

SOFiSTiK AG - www.sofistik.de

Composite bridge 38+50+38, b=14.25m, 2x2HL1100R HISTAR460 , slab 0.30m C30/37

Section values for warping

Wmin[cm2]	Wmax[cm2]	CM[cm6]	CMS[cm4]	ASwyy[cm6]	ASwzz[cm6]	ry[mm]	rz[mm]
-3976.78	3976.783842993888.	5857328.4		-3.21	-83.09	0.0	0.0

Design values of cross section

Mat NoR	A[cm2] It[cm4]	Ay/Az/Ayz [cm2]	Iy/Iz/Iyz [cm4]	ys/zs [mm]	modules [N/mm2]	gam [kN/m]
1	1750.20	607.50	10310821.	0.0	182609	13.74
	6270.0	965.97	398580.9	1054.4	70234	

Design forces and moments
(C/E = characteristic plastic/elastic, D=plast.Design, F=elast. Design)

	N[kN]	Vy[kN]	Vz[kN]	Mt[kNm]	My[kNm]	Mz[kNm]	y[mm]	z[mm]	BUCK
C	58631.6	14099.76	19751.23	830.78	40775.82	5390.09	0.0	1054.	c c
C	0.0				0.00	0.00	0.0	0.0	COMB
E	58631.6	9399.84	17039.34	525.38	34389.20	3296.90	0.0	1054.	
D	50984.0	12260.66	17174.98	722.41	35457.23	4687.03	0.0	1054.	
D	0.0				0.00	0.00	0.0	0.0	COMB
F	50984.0	8173.78	14816.82	456.85	29903.65	2866.87	0.0	1054.	

Additional Design Data

M	periphery-O/-I [m2/m]	[m2/m]	deff [mm]	t-min [mm]	t-max [mm]	SMP [o/o]	thet-p [tm2/m]	thet-y [tm2/m]	thet-z [tm2/m]	thet-yz [tm2/m]
	7.168		48.8	45.0	52.0	0.0	0.841	0.809	0.031	

Cross section No. 379.2 = CS 10 - prefab. slab C1

SOFiSTiK AG - www.sofistik.de

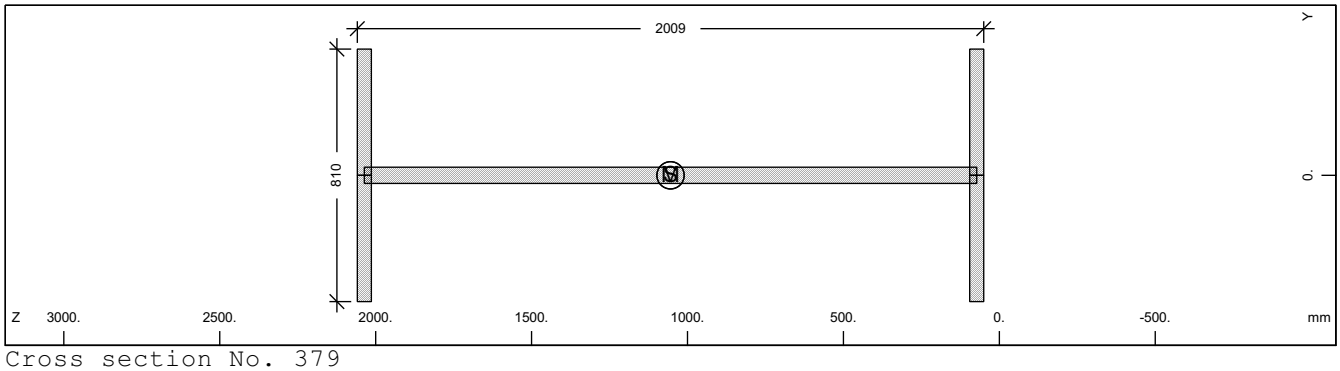

Cross section No. 379

Static properties of cross section

Mat NoR	A[cm2] It[cm4]	Ay/Az/Ayz [cm2]	Iy/Iz/Iyz [cm4]	ys/zs [mm]	modules [N/mm2]	gam [kN/m]
1	1750.20	607.50	10310821.	0.0	210000	13.74
	6270.0	965.97	398580.9	1054.4	80769	

Additional static properties of cross section

Alfa-T [1/°K]	ymin ymax [mm]	zmin zmax [mm]	hymin hzmin [mm]	AK AB [cm2]	MB	Tau-T Tau-B [1/m3]	Tau-Vy Tau-Vz [1/m2]
1.2E-05	-405.0	-1004.4		1.045E+03		3.681E+02	2.058E+01
	405.0	1004.4				1.255E+02	1.135E+01

Section values for warping

Wmin[cm2]	Wmax[cm2]	CM[cm6]	CMS[cm4]	ASwyy[cm6]	ASwzz[cm6]	ry[mm]	rz[mm]
-3976.78	3976.783842993888.	5857328.4		-3.21	-83.09	0.0	0.0

Design values of cross section

Mat NoR	A[cm2] It[cm4]	Ay/Az/Ayz [cm2]	Iy/Iz/Iyz [cm4]	ys/zs [mm]	modules [N/mm2]	gam [kN/m]
1	1750.20	607.50	10310821.	0.0	182609	13.74
	6270.0	965.97	398580.9	1054.4	70234	

Composite bridge 38+50+38, b=14.25m, 2x2HL1100R HISTAR460 , slab 0.30m C30/37

Design forces and moments
(C/E = characteristic plastic/elastic, D=plast.Design, F=elast. Design)

	N[kN]	Vy[kN]	Vz[kN]	Mt[kNm]	My[kNm]	Mz[kNm]	y[mm]	z[mm]	BUCK
C	58631.6	14099.76	19751.23	830.78	40775.82	5390.09	0.0	1054.	c c
C	0.0				0.00	0.00	0.0	0.0	COMB
E	58631.6	9399.84	17039.34	525.38	34389.20	3296.90	0.0	1054.	
D	50984.0	12260.66	17174.98	722.41	35457.23	4687.03	0.0	1054.	
D	0.0				0.00	0.00	0.0	0.0	COMB
F	50984.0	8173.78	14816.82	456.85	29903.65	2866.87	0.0	1054.	

Additional Design Data

M	periphery-O/-I [m2/m]	[m2/m]	deff [mm]	t-min [mm]	t-max [mm]	SMP [o/o]	thet-p [tm2/m]	thet-y [tm2/m]	thet-z [tm2/m]	thet-yz [tm2/m]
	7.168		48.8	45.0	52.0	0.0	0.841	0.809	0.031	

Cross section No. 379.3 = CS 20 - in-situ conc:C2

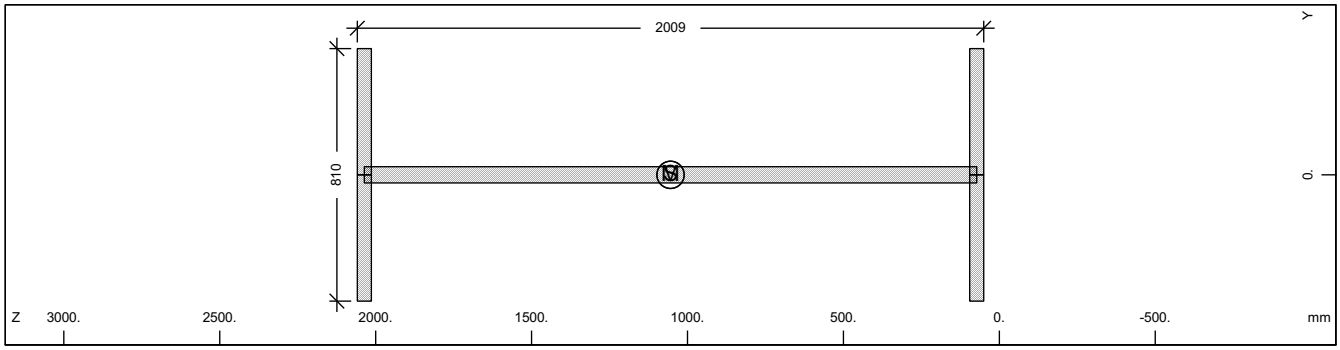

Cross section No. 379

Static properties of cross section

Mat NoR	A[cm2] It[cm4]	Ay/Az/Ayz [cm2]	Iy/Iz/Iyz [cm4]	ys/zs [mm]	modules [N/mm2]	gam [kN/m]
1	1750.20	607.50	10310821.	0.0	210000	13.74
	6270.0	965.97	398580.9	1054.4	80769	

Additional static properties of cross section

Alfa-T [1/°K]	ymin ymax [mm]	zmin zmax [mm]	hymin hzmin [mm]	AK AB [cm2]	MB	Tau-T Tau-B [1/m3]	Tau-Vy Tau-Vz [1/m2]
1.2E-05	-405.0	-1004.4		1.045E+03		3.681E+02	2.058E+01
	405.0	1004.4				1.255E+02	1.135E+01

Section values for warping

Wmin[cm2]	Wmax[cm2]	CM[cm6]	CMS[cm4]	ASwyy[cm6]	ASwzz[cm6]	ry[mm]	rz[mm]
-3976.78	3976.783842993888.		5857328.4	-3.21	-83.09	0.0	0.0

Design values of cross section

Mat NoR	A[cm2] It[cm4]	Ay/Az/Ayz [cm2]	Iy/Iz/Iyz [cm4]	ys/zs [mm]	modules [N/mm2]	gam [kN/m]
1	1750.20	607.50	10310821.	0.0	182609	13.74
	6270.0	965.97	398580.9	1054.4	70234	

Design forces and moments
(C/E = characteristic plastic/elastic, D=plast.Design, F=elast. Design)

	N[kN]	Vy[kN]	Vz[kN]	Mt[kNm]	My[kNm]	Mz[kNm]	y[mm]	z[mm]	BUCK
C	58631.6	14099.76	19751.23	830.78	40775.82	5390.09	0.0	1054.	c c
C	0.0				0.00	0.00	0.0	0.0	COMB
E	58631.6	9399.84	17039.34	525.38	34389.20	3296.90	0.0	1054.	
D	50984.0	12260.66	17174.98	722.41	35457.23	4687.03	0.0	1054.	
D	0.0				0.00	0.00	0.0	0.0	COMB
F	50984.0	8173.78	14816.82	456.85	29903.65	2866.87	0.0	1054.	

SOFiSTiK AG - www.sofistik.de

Composite bridge 38+50+38, b=14.25m, 2x2HL1100R HISTAR460 , slab 0.30m C30/37

Additional Design Data

M	periphery-O/-I [m2/m]	[m2/m]	deff [mm]	t-min [mm]	t-max [mm]	SMP [o/o]	thet-p [tm2/m]	thet-y [tm2/m]	thet-z [tm2/m]	thet-yz [tm2/m]
	7.168		48.8	45.0	52.0	0.0	0.841	0.809	0.031	

Cross section No. 379.4 = CS 21 - reinf active:C2

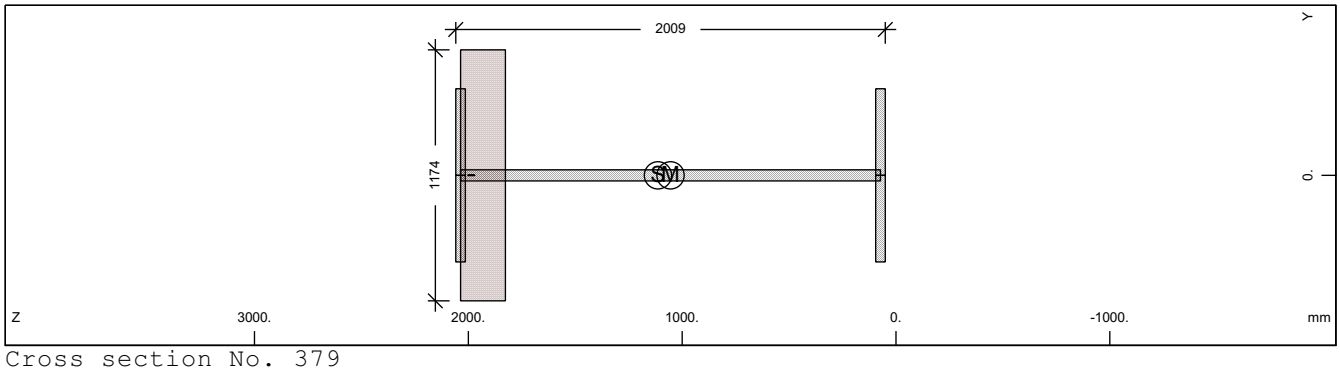

Cross section No. 379

Static properties of cross section

Mat NoR	A[cm2] It[cm4]	Ay/Az/Ayz [cm2]	Iy/Iz/Iyz [cm4]	ys/zs [mm]	modules [N/mm2]	gam [kN/m]
1	1875.94	607.50	11218295.	0.0	210000	19.90
	6270.0	955.58	398580.9	1113.2	80769	

Additional static properties of cross section

Alfa-T [1/°K]	ymin ymax [mm]	zmin zmax [mm]	hymin hzmin [mm]	AK AB [cm2]	MB	Tau-T Tau-B [1/m3]	Tau-Vy Tau-Vz [1/m2]
1.2E-05	-587.0	-1063.2		1.680E+03		1.014E+01	2.058E+01
	587.0	945.6		2.464E+03		1.255E+02	1.133E+01

Section values for warping

Wmin[cm2]	Wmax[cm2]	CM[cm6]	CMS[cm4]	ASwyy[cm6]	ASwzz[cm6]	ry[mm]	rz[mm]
-3976.78	3976.78	3842994120.	5857328.7	-3.68	-103.61	0.0	15.5

Partial cross sections

Mat NoR	A[cm2] It[cm4]	Ay/Az/Ayz [cm2]	Iy/Iz/Iyz [cm4]	ys/zs [mm]	modules [N/mm2]	gam [kN/m]
1	1750.20	607.50	10310821.	0.0	210000	13.74
	14125.1	954.81	398580.9	1054.4	80769	
25	2463.55		90399.7	0.0	10667	6.16
	11318175.	14.03	0.0	1931.4	4444	
210	0.64	0.00	0.0	0.0	200000	0.00
	2.2	0.00	0.0	1986.3	76923	

Design values of cross section

Mat NoR	A[cm2] It[cm4]	Ay/Az/Ayz [cm2]	Iy/Iz/Iyz [cm4]	ys/zs [mm]	modules [N/mm2]	gam [kN/m]
1	1846.75	607.50	11018672.	0.0	182609	19.90
	6270.0	955.40	398580.9	1100.3	70234	

Design forces and moments
(C/E = characteristic plastic/elastic, D=plast.Design, F=elast. Design)

	N[kN]	Vy[kN]	Vz[kN]	Mt[kNm]	My[kNm]	Mz[kNm]	y[mm]	z[mm]	BUCK
C	58663.8	14118.33	24277.97	3224.54	40805.77	6486.74	2.2	1055.	c c
C	-2016.6				40864.13	0.00	0.0	1113.	COMB
C	-3695.3				0.00	6474.92	0.0	0.0	COMB
C	-66054.4	14118.33	24277.97	3224.54	-46496.7	-6470.11	-2.2	1267.	
C	-5374.1				-46911.1	0.00	0.0	1113.	COMB
C	-3695.3				0.00	-6474.92	0.0	0.0	COMB
E	62844.1	9399.84	17070.42	1626.80	35346.51	3296.90	0.0	1113.	
E	-62844.1	9399.84	17070.42	1626.80	-35346.5	-3296.90	0.0	1113.	
D	51012.0	12276.81	20286.53	2319.81	35483.28	5417.83	2.0	1055.	

SOFiSTiK AG - www.sofistik.de

Composite bridge 38+50+38, b=14.25m, 2x2HL1100R HISTAR460 , slab 0.30m C30/37

Design forces and moments
(C/E = characteristic plastic/elastic, D=plast.Design, F=elast. Design)

	N[kN]	Vy[kN]	Vz[kN]	Mt[kNm]	My[kNm]	Mz[kNm]	y[mm]	z[mm]	BUCK
D	-1753.5				35534.03	0.00	0.0	1113.	COMB
D	-2463.6				0.00	5410.31	0.0	0.0	COMB
D	-55939.1	12276.81	20286.53	2319.81	-39399.1	-5407.78	-2.0	1218.	
D	-3173.6				-39565.4	0.00	0.0	1113.	COMB
D	-2463.6				0.00	-5410.31	0.0	0.0	COMB
F	54647.0	8173.78	14843.84	1084.53	30736.10	2866.87	0.0	1113.	
F	-54647.0	8173.78	14843.84	1084.53	-30736.1	-2866.87	0.0	1113.	

Additional Design Data

M	periphery-O/-I [m2/m]	[m2/m]	deff [mm]	t-min [mm]	t-max [mm]	SMP [o/o]	thet-p [tm2/m]	thet-y [tm2/m]	thet-z [tm2/m]	thet-yz [tm2/m]
	7.591		49.4	32.0	209.8	0.0	1.170	1.139	0.031	
1	7.168		48.8	45.0	52.0	0.0	0.841	0.809	0.031	
25	0.420		1174.0			0.0	0.002	0.002		
**	0.004		32.0			0.0	0.000	0.000	0.000	

Cross section No. 379.5 = CS 30 - in-situ conc:C3

Cross section No. 380 - VFT (353)

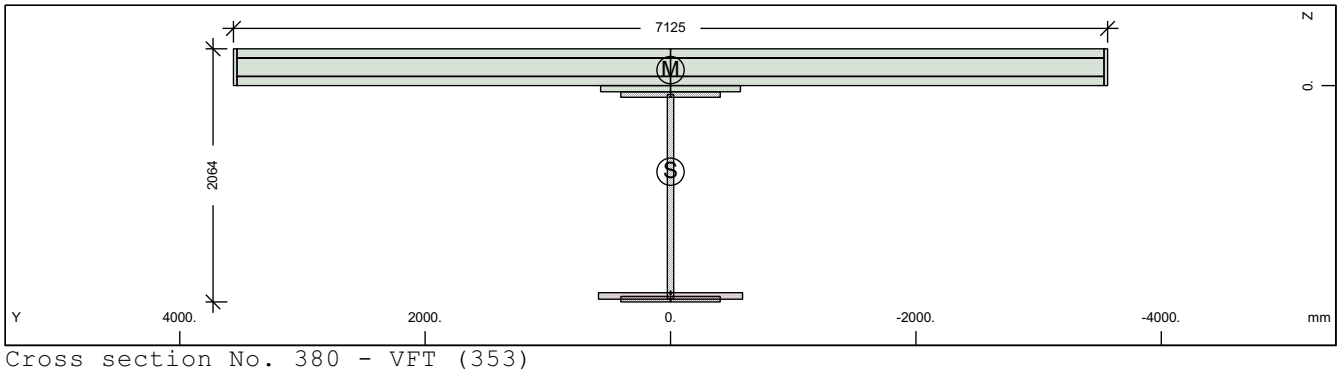

Cross section No. 380 - VFT (353)

Static properties of cross section

Mat NoR	A[cm2] It[cm4]	Ay/Az/Ayz [cm2]	Iy/Iz/Iyz [cm4]	ys/zs [mm]	y/z-sc [mm]	modules [N/mm2]	gam [kN/m]
1	2051.50	368.22	11179625.	0.0	0.0	210000	68.95
	6270.0	483.79	17983471.	701.8	-126.6	80769	

Additional static properties of cross section

Alfa-T [1/°K]	ymin ymax [mm]	zmin zmax [mm]	hymin hzmin [mm]	AK AB [cm2]	MB	Tau-T Tau-B [1/m3]	Tau-Vy Tau-Vz [1/m2]
1.2E-05	-3562.5	-1001.8		4.476E+02		3.806E+01	3.305E+01
	3562.5	1061.9		2.257E+04		1.255E+02	2.789E+01

Section values for warping

Wmin[cm2]	Wmax[cm2]	CM[cm6]	CMS[cm4]	ASwyy[cm6]	ASwzz[cm6]	ry[mm]	rz[mm]
-7564.50	7564.508117049965.		1120143.4	-204.17	-126.93	0.0	517.4

Partial cross sections

Mat NoR	A[cm2] It[cm4]	Ay/Az/Ayz [cm2]	Iy/Iz/Iyz [cm4]	ys/zs [mm]	modules [N/mm2]	gam [kN/m]
1	1596.73	0.11	7088401.2	0.0	210000	12.53
	12741.8	240.63	398580.9	906.9	80769	
25	620.94		1447.5	0.0	10667	1.55
	2852745.4	0.09	0.0	1714.8	4444	
210	0.64	0.00	0.0	0.0	200000	0.00
	2.2	0.00	0.0	1691.2	76923	
31	21945.00	16399.22	170028.4	0.0	0	54.86
	6417251.4	10473.13	904880243.	-145.5	0	

SOFiSTiK AG - www.sofistik.de

Composite bridge 38+50+38, b=14.25m, 2x2HL1100R HISTAR460 , slab 0.30m C30/37

300	443.75	386.52	24961.2	0.0	200000	0.00
	14.6	254.84	18464130.	-150.0	76923	

Design values of cross section

Mat	A[cm2]	Ay/Az/Ayz	Iy/Iz/Iyz	ys/zs	modules	gam
NoR	It[cm4]	[cm2]	[cm4]	[mm]	[N/mm2]	[kN/m]
1	2044.14	368.22	11103822.	0.0	182609	68.95
	6270.0	483.34	17983471.	698.1	70234	

Design forces and moments
(C/E = characteristic plastic/elastic, D=plast.Design, F=elast. Design)

	N[kN]	Vy[kN]	Vz[kN]	Mt[kNm]	My[kNm]	Mz[kNm]	y[mm]	z[mm]	BUCK
C	75710.2	63137.67	47069.75	99949.84	59657.41	101738.4	60.4	-75.8	c c
C	-80846.2				107944.6	0.00	0.0	701.8	COMB
C	-33848.9				0.00	102147.4	0.0	0.0	COMB
C	-139878.	63137.67	47069.75	99949.84	-51572.4	-101626.	-60.4	324.6	
C	13148.3				-54053.4	0.00	0.0	701.8	COMB
C	-33848.9				0.00	-102147.	0.0	0.0	COMB
E	68725.3	8733.64	10348.86	433.52	35268.12	26722.64	0.0	701.8	
E	-68725.3	8733.64	10348.86	433.52	-35268.1	-26722.6	0.0	701.8	
D	65834.9	47555.52	35414.98	66805.27	50778.27	76913.23	21.7	-74.2	
D	-56943.2				82547.57	0.00	0.0	701.8	COMB
D	-22565.9				0.00	77131.13	0.0	0.0	COMB
D	-108613.	47555.52	35414.98	66805.27	-44317.7	-76886.3	-21.7	312.1	
D	11811.3				-46620.1	0.00	0.0	701.8	COMB
D	-22565.9				0.00	-77131.1	0.0	0.0	COMB
F	59761.1	7594.47	8999.01	289.02	30667.93	23237.08	0.0	701.8	
F	-59761.1	7594.47	8999.01	289.02	-30667.9	-23237.1	0.0	701.8	

Additional Design Data

M	periphery-O/-I		deff	t-min	t-max	SMP	thet-p	thet-y	thet-z	thet-yz
	[m2/m]	[m2/m]	[mm]	[mm]	[mm]	[o/o]	[tm2/m]	[tm2/m]	[tm2/m]	[tm2/m]
	51.482		8.0	3.1	300.0	0.0	24.764	2.111	22.653	
1	6.577		48.6	45.0	52.0	0.0	0.588	0.556	0.031	
25	0.106		1174.0			0.0	0.000	0.000		
**	0.004		32.0			0.0	0.000		0.000	
31	16.530		265.5	50.0	300.0	0.0	22.626	0.004	22.622	
**	28.265		3.1	3.1	3.1	0.0	0.000	0.000	0.000	

Cross section No. 380.1 = CS 1 - steel alone

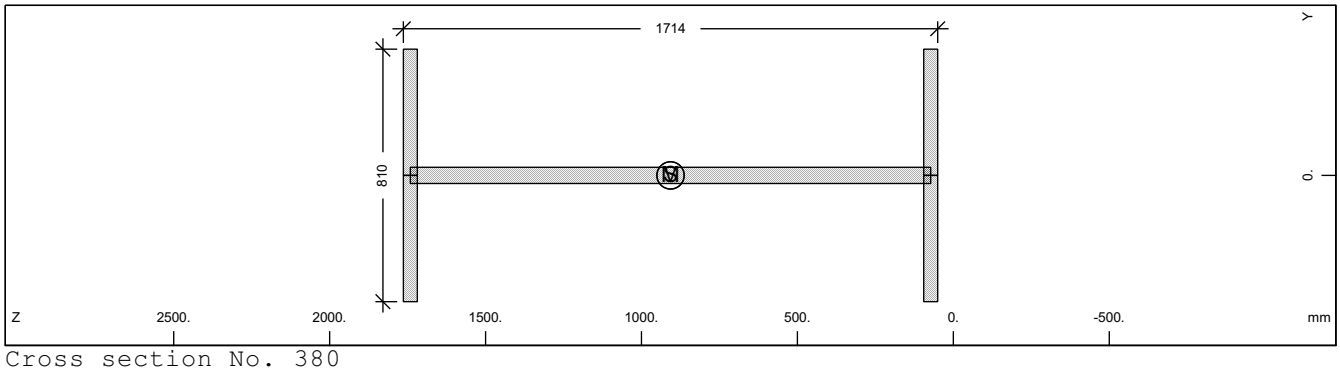

Cross section No. 380

Static properties of cross section

Mat	A[cm2]	Ay/Az/Ayz	Iy/Iz/Iyz	ys/zs	modules	gam
NoR	It[cm4]	[cm2]	[cm4]	[mm]	[N/mm2]	[kN/m]
1	1596.73	607.50	7088401.2	0.0	210000	12.53
	6270.0	815.49	398580.9	906.9	80769	

SOFiSTiK AG - www.sofistik.de

Composite bridge 38+50+38, b=14.25m, 2x2HL1100R HISTAR460 , slab 0.30m C30/37

Additional static properties of cross section

Alfa-T	ymin ymax	zmin zmax	hymin hzmin	AK AB	MB	Tau-T Tau-B	Tau-Vy Tau-Vz
[1/°K]	[mm]	[mm]	[mm]	[cm2]		[1/m3]	[1/m2]
1.2E-05	-405.0	-856.9		9.424E+02		4.081E+02	2.058E+01
	405.0	856.9				1.255E+02	1.316E+01

Section values for warping

Wmin[cm2]	Wmax[cm2]	CM[cm6]	CMS[cm4]	ASwyy[cm6]	ASwzz[cm6]	ry[mm]	rz[mm]
-3379.12	3379.122774685865.		4229058.7	-1.20	-21.27	0.0	0.0

Design values of cross section

Mat NoR	A[cm2] It[cm4]	Ay/Az/Ayz [cm2]	Iy/Iz/Iyz [cm4]	ys/zs [mm]	modules [N/mm2]	gam [kN/m]
1	1596.73	607.50	7088401.2	0.0	182609	12.53
	6270.0	815.49	398580.9	906.9	70234	

Design forces and moments
(C/E = characteristic plastic/elastic, D=plast.Design, F=elast. Design)

	N[kN]	Vy[kN]	Vz[kN]	Mt[kNm]	My[kNm]	Mz[kNm]	y[mm]	z[mm]	BUCK
C	53490.3	14099.76	16782.87	753.60	32502.88	5323.25	0.0	906.9	c c
C	0.0				0.00	0.00	0.0	0.0	COMB
E	53490.3	9399.84	14695.65	473.93	27713.28	3296.90	0.0	906.9	
D	46513.3	12260.66	14593.80	655.30	28263.38	4628.91	0.0	906.9	
D	0.0				0.00	0.00	0.0	0.0	COMB
F	46513.3	8173.78	12778.83	412.11	24098.51	2866.87	0.0	906.9	

Additional Design Data

M	periphery-O/-I [m2/m]	[m2/m]	deff [mm]	t-min [mm]	t-max [mm]	SMP [o/o]	thet-p [tm2/m]	thet-y [tm2/m]	thet-z [tm2/m]	thet-yz [tm2/m]
	6.577		48.6	45.0	52.0	0.0	0.588	0.556	0.031	

Cross section No. 380.2 = CS 10 - prefab. slab C1

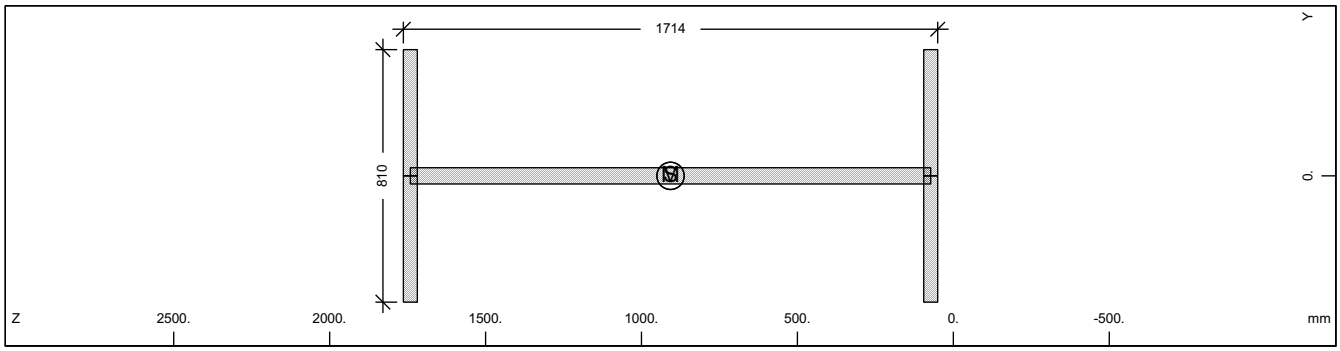

Cross section No. 380

Static properties of cross section

Mat NoR	A[cm2] It[cm4]	Ay/Az/Ayz [cm2]	Iy/Iz/Iyz [cm4]	ys/zs [mm]	modules [N/mm2]	gam [kN/m]
1	1596.73	607.50	7088401.2	0.0	210000	12.53
	6270.0	815.49	398580.9	906.9	80769	

Additional static properties of cross section

Alfa-T	ymin ymax	zmin zmax	hymin hzmin	AK AB	MB	Tau-T Tau-B	Tau-Vy Tau-Vz
[1/°K]	[mm]	[mm]	[mm]	[cm2]		[1/m3]	[1/m2]
1.2E-05	-405.0	-856.9		9.424E+02		4.081E+02	2.058E+01
	405.0	856.9				1.255E+02	1.316E+01

Section values for warping

Wmin[cm2]	Wmax[cm2]	CM[cm6]	CMS[cm4]	ASwyy[cm6]	ASwzz[cm6]	ry[mm]	rz[mm]
-3379.12	3379.122774685865.		4229058.7	-1.20	-21.27	0.0	0.0

SOFiSTiK AG - www.sofistik.de

Composite bridge 38+50+38, b=14.25m, 2x2HL1100R HISTAR460 , slab 0.30m C30/37

Design values of cross section

Mat NoR	A[cm2] It[cm4]	Ay/Az/Ayz [cm2]	Iy/Iz/Iyz [cm4]	ys/zs [mm]	modules [N/mm2]	gam [kN/m]
1	1596.73	607.50	7088401.2	0.0	182609	12.53
	6270.0	815.49	398580.9	906.9	70234	

Design forces and moments
(C/E = characteristic plastic/elastic, D=plast.Design, F=elast. Design)

	N[kN]	Vy[kN]	Vz[kN]	Mt[kNm]	My[kNm]	Mz[kNm]	y[mm]	z[mm]	BUCK
C	53490.3	14099.76	16782.87	753.60	32502.88	5323.25	0.0	906.9	c c
C	0.0				0.00	0.00	0.0	0.0	COMB
E	53490.3	9399.84	14695.65	473.93	27713.28	3296.90	0.0	906.9	
D	46513.3	12260.66	14593.80	655.30	28263.38	4628.91	0.0	906.9	
D	0.0				0.00	0.00	0.0	0.0	COMB
F	46513.3	8173.78	12778.83	412.11	24098.51	2866.87	0.0	906.9	

Additional Design Data

M	periphery-O/-I [m2/m] [m2/m]	deff [mm]	t-min [mm]	t-max [mm]	SMP [o/o]	thet-p [tm2/m]	thet-y [tm2/m]	thet-z [tm2/m]	thet-yz [tm2/m]
	6.577	48.6	45.0	52.0	0.0	0.588	0.556	0.031	

Cross section No. 380.3 = CS 20 - in-situ conc:C2

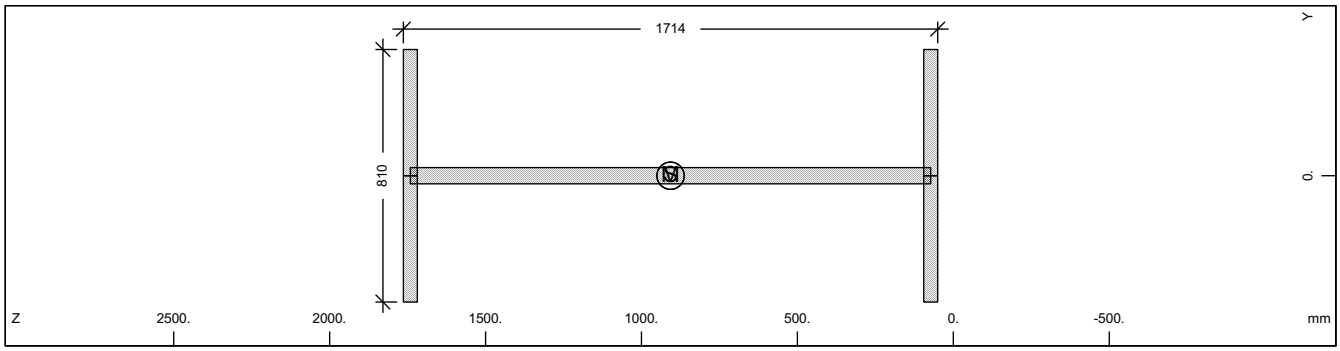

Cross section No. 380

Static properties of cross section

Mat NoR	A[cm2] It[cm4]	Ay/Az/Ayz [cm2]	Iy/Iz/Iyz [cm4]	ys/zs [mm]	modules [N/mm2]	gam [kN/m]
1	1596.73	607.50	7088401.2	0.0	210000	12.53
	6270.0	815.49	398580.9	906.9	80769	

Additional static properties of cross section

Alfa-T [1/°K]	ymin ymax [mm]	zmin zmax [mm]	hymin hzmin [mm]	AK AB [cm2]	MB	Tau-T Tau-B [1/m3]	Tau-Vy Tau-Vz [1/m2]
1.2E-05	-405.0	-856.9		9.424E+02		4.081E+02	2.058E+01
	405.0	856.9				1.255E+02	1.316E+01

Section values for warping

Wmin[cm2]	Wmax[cm2]	CM[cm6]	CMS[cm4]	ASwyy[cm6]	ASwzz[cm6]	ry[mm]	rz[mm]
-3379.12	3379.122774685865.		4229058.7	-1.20	-21.27	0.0	0.0

Design values of cross section

Mat NoR	A[cm2] It[cm4]	Ay/Az/Ayz [cm2]	Iy/Iz/Iyz [cm4]	ys/zs [mm]	modules [N/mm2]	gam [kN/m]
1	1596.73	607.50	7088401.2	0.0	182609	12.53
	6270.0	815.49	398580.9	906.9	70234	

Design forces and moments
(C/E = characteristic plastic/elastic, D=plast.Design, F=elast. Design)

	N[kN]	Vy[kN]	Vz[kN]	Mt[kNm]	My[kNm]	Mz[kNm]	y[mm]	z[mm]	BUCK
C	53490.3	14099.76	16782.87	753.60	32502.88	5323.25	0.0	906.9	c c
C	0.0				0.00	0.00	0.0	0.0	COMB
E	53490.3	9399.84	14695.65	473.93	27713.28	3296.90	0.0	906.9	

SOFiSTiK AG - www.sofistik.de

Composite bridge 38+50+38, b=14.25m, 2x2HL1100R HISTAR460 , slab 0.30m C30/37

Design forces and moments
(C/E = characteristic plastic/elastic, D=plast.Design, F=elast. Design)

	N[kN]	Vy[kN]	Vz[kN]	Mt[kNm]	My[kNm]	Mz[kNm]	y[mm]	z[mm]	BUCK
D	46513.3	12260.66	14593.80	655.30	28263.38	4628.91	0.0	906.9	
D	0.0				0.00	0.00	0.0	0.0	COMB
F	46513.3	8173.78	12778.83	412.11	24098.51	2866.87	0.0	906.9	

Additional Design Data

M	periphery-O/-I [m2/m]	[m2/m]	deff [mm]	t-min [mm]	t-max [mm]	SMP [o/o]	thet-p [tm2/m]	thet-y [tm2/m]	thet-z [tm2/m]	thet-yz [tm2/m]
	6.577		48.6	45.0	52.0	0.0	0.588	0.556	0.031	

Cross section No. 380.4 = CS 21 - reinf active:C2

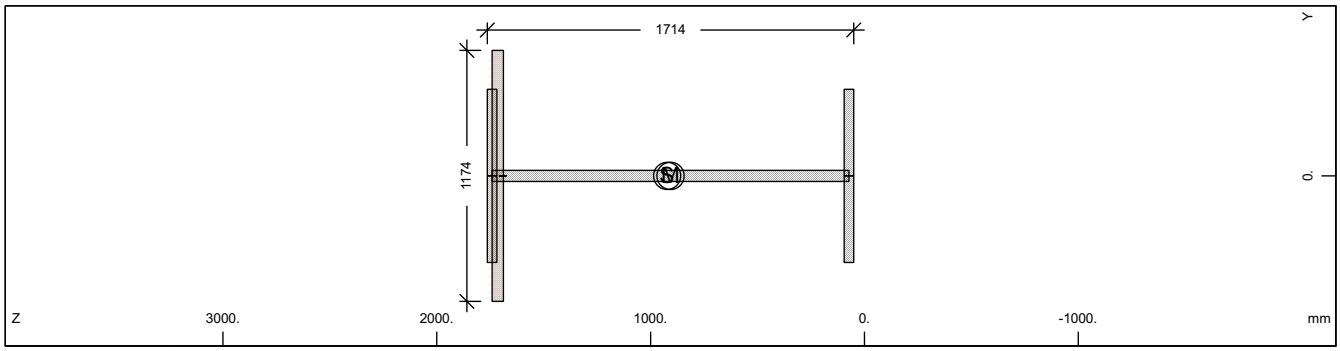

Cross section No. 380

Static properties of cross section

Mat NoR	A[cm2] It[cm4]	Ay/Az/Ayz [cm2]	Iy/Iz/Iyz [cm4]	ys/zs [mm]	modules [N/mm2]	gam [kN/m]
1	1628.88	607.50	7293967.9	0.0	210000	14.09
	6270.0	816.70	398580.9	922.8	80769	

Additional static properties of cross section

Alfa-T [1/°K]	ymin ymax [mm]	zmin zmax [mm]	hymin hzmin [mm]	AK AB [cm2]	MB	Tau-T Tau-B [1/m3]	Tau-Vy Tau-Vz [1/m2]
1.2E-05	-587.0	-872.8		4.476E+02		3.806E+01	2.058E+01
	587.0	840.9		6.209E+02		1.255E+02	1.313E+01

Section values for warping

Wmin[cm2]	Wmax[cm2]	CM[cm6]	CMS[cm4]	ASwyy[cm6]	ASwzz[cm6]	ry[mm]	rz[mm]
-3379.12	3379.122774685865.		4229058.7	-1.80	-32.93	0.0	6.4

Partial cross sections

Mat NoR	A[cm2] It[cm4]	Ay/Az/Ayz [cm2]	Iy/Iz/Iyz [cm4]	ys/zs [mm]	modules [N/mm2]	gam [kN/m]
1	1596.73	607.50	7088401.2	0.0	210000	12.53
	12741.8	816.68	398580.9	906.9	80769	
25	620.94		1447.5	0.0	10667	1.55
	2852745.4	0.38	0.0	1714.8	4444	
210	0.64	0.00	0.0	0.0	200000	0.00
	2.2	0.00	0.0	1691.2	76923	

Design values of cross section

Mat NoR	A[cm2] It[cm4]	Ay/Az/Ayz [cm2]	Iy/Iz/Iyz [cm4]	ys/zs [mm]	modules [N/mm2]	gam [kN/m]
1	1621.52	607.50	7247582.9	0.0	182609	14.09
	6270.0	816.69	398580.9	919.2	70234	

Design forces and moments
(C/E = characteristic plastic/elastic, D=plast.Design, F=elast. Design)

	N[kN]	Vy[kN]	Vz[kN]	Mt[kNm]	My[kNm]	Mz[kNm]	y[mm]	z[mm]	BUCK
C	53522.4	14118.33	18269.30	1362.70	32528.09	5597.96	0.8	907.8	c c
C	-523.1				32532.02	0.00	0.0	922.8	COMB

SOFiSTiK AG - www.sofistik.de

Composite bridge 38+50+38, b=14.25m, 2x2HL1100R HISTAR460 , slab 0.30m C30/37

Design forces and moments
(C/E = characteristic plastic/elastic, D=plast.Design, F=elast. Design)

	N[kN]	Vy[kN]	Vz[kN]	Mt[kNm]	My[kNm]	Mz[kNm]	y[mm]	z[mm]	BUCK
C	-931.4				0.00	5596.87	0.0	0.0	COMB
C	-55385.3	14118.33	18269.30	1362.70	-33981.5	-5596.39	-0.8	961.2	
C	-1339.7				-34007.3	0.00	0.0	922.8	COMB
C	-931.4				0.00	-5596.87	0.0	0.0	COMB
E	54567.4	9399.84	14733.37	433.49	27996.23	3296.90	0.0	922.8	
E	-54567.4	9399.84	14733.37	433.49	-27996.2	-3296.90	0.0	922.8	
D	46541.3	12276.81	15678.47	1062.93	28285.29	4811.86	0.6	907.8	
D	-454.9				28288.71	0.00	0.0	922.8	COMB
D	-620.9				0.00	4811.38	0.0	0.0	COMB
D	-47783.1	12276.81	15678.47	1062.93	-29262.0	-4811.09	-0.6	948.8	
D	-787.0				-29272.2	0.00	0.0	922.8	COMB
D	-620.9				0.00	-4811.38	0.0	0.0	COMB
F	47449.9	8173.78	12811.63	288.99	24344.55	2866.87	0.0	922.8	
F	-47449.9	8173.78	12811.63	288.99	-24344.5	-2866.87	0.0	922.8	

Additional Design Data

M	periphery-O/-I [m2/m]	[m2/m]	deff [mm]	t-min [mm]	t-max [mm]	SMP [o/o]	thet-p [tm2/m]	thet-y [tm2/m]	thet-z [tm2/m]	thet-yz [tm2/m]
	6.687		48.7	32.0	52.9	0.0	0.678	0.647	0.031	
1	6.577		48.6	45.0	52.0	0.0	0.588	0.556	0.031	
25	0.106		1174.0			0.0	0.000	0.000		
**	0.004		32.0			0.0	0.000		0.000	

Cross section No. 380.5 = CS 30 - in-situ conc:C3

Cross section No. 451 - VFT

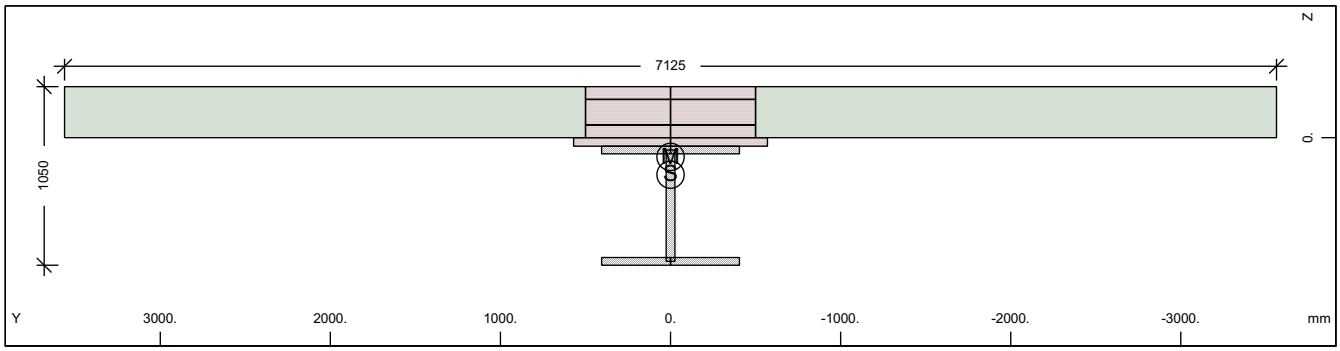

Cross section No. 451 - VFT

Static properties of cross section

Mat NoR	A[cm2] It[cm4]	Ay/Az/Ayz [cm2]	Iy/Iz/Iyz [cm4]	ys/zs [mm]	y/z-sc [mm]	modules [N/mm2]	gam [kN/m]
1	1642.18	1074.80	1946674.3	0.0	0.0	210000	63.26
	6270.0	462.67	897984.0	217.7	112.9	80769	

Additional static properties of cross section

Alfa-T [1/°K]	ymin ymax [mm]	zmin zmax [mm]	hymin hzmin [mm]	AK AB [cm2]	MB	Tau-T Tau-B [1/m3]	Tau-Vy Tau-Vz [1/m2]
1.2E-05	-3562.5	-517.7		2.115E+03		3.225E+01	1.326E+01
	3562.5	532.3		2.195E+04		1.189E+02	2.503E+01

Section values for warping

Wmin[cm2]	Wmax[cm2]	CM[cm6]	CMS[cm4]	ASwyy[cm6]	ASwzz[cm6]	ry[mm]	rz[mm]
-9367.06	9367.06	1042624125.	1423880.6	2.35	5.10	0.0	321.1

SOFiSTiK AG - www.sofistik.de

Composite bridge 38+50+38, b=14.25m, 2x2HL1100R HISTAR460 , slab 0.30m C30/37

Partial cross sections

Mat NoR	A[cm2] It[cm4]	Ay/Az/Ayz [cm2]	Iy/Iz/Iyz [cm4]	ys/zs [mm]	modules [N/mm2]	gam [kN/m]
1	1069.60	374.63	903669.7	0.0	210000	8.40
	7990.7	428.98	398580.9	400.0	80769	
30	3570.00	4030.92	146691.2	0.0	32837	8.93
	904750.1	193.18	3117310.1	-122.1	13682	
31	18375.00	41481168.	0.0	0.0	0	45.94
	5512501.0	37388.97	901762872.	-150.0	0	
300	15.07	17.99	847.8	0.0	200000	0.00
	0.0	1.01	12560.0	-150.0	76923	

Design values of cross section

Mat NoR	A[cm2] It[cm4]	Ay/Az/Ayz [cm2]	Iy/Iz/Iyz [cm4]	ys/zs [mm]	modules [N/mm2]	gam [kN/m]
1	1511.92	915.42	1777982.7	0.0	182609	63.26
	6270.0	455.03	784247.7	247.0	70234	

Design forces and moments
(C/E = characteristic plastic/elastic, D=plast.Design, F=elast. Design)

	N[kN]	Vy[kN]	Vz[kN]	Mt[kNm]	My[kNm]	Mz[kNm]	y[mm]	z[mm]	BUCK
C	36585.2	50744.10	35388.07	99055.71	22135.36	59290.14	297.4	-132.	c d
C	-60238.3				34632.55	0.00	0.0	217.7	COMB
C	-32917.5				0.00	62637.10	0.0	0.0	COMB
C	-102420.	50744.10	35388.07	99055.72	-10272.8	-59290.1	-297.	378.2	
C	-5596.7				-10722.3	0.00	0.0	217.7	COMB
C	-32917.5				0.00	-62637.1	0.0	0.0	COMB
E	55012.9	5833.03	7727.07	523.56	7213.94	3022.57	0.0	217.7	
E	-31506.7	5833.03	7727.07	523.56	-12252.0	-3022.57	0.0	217.7	
D	31813.2	36778.50	25464.89	66149.80	18453.32	41510.95	197.9	-81.3	
D	-39023.3				25263.91	0.00	0.0	217.7	COMB
D	-21945.0				0.00	42829.79	0.0	0.0	COMB
D	-75703.2	36778.50	25464.89	66149.80	-8932.85	-41511.0	-198.	378.3	
D	-4866.7				-9323.74	0.00	0.0	217.7	COMB
D	-21945.0				0.00	-42829.8	0.0	0.0	COMB
F	47837.3	3888.69	6719.19	349.04	4809.30	2015.05	0.0	217.7	
F	-21004.4	3888.69	6719.19	349.04	-10653.9	-2015.05	0.0	217.7	

Additional Design Data

M	periphery-O/-I [m2/m]	[m2/m]	deff [mm]	t-min [mm]	t-max [mm]	SMP [o/o]	thet-p [tm2/m]	thet-y [tm2/m]	thet-z [tm2/m]	thet-yz [tm2/m]
	25.080		13.1	0.8	300.0	0.0	22.945	0.292	22.653	
1	4.550		47.0	45.0	52.0	0.0	0.102	0.071	0.031	
30	4.280		600.0	50.0	300.0	0.0	0.082	0.004	0.078	
31	12.250		300.0	300.0	300.0	0.0	22.544		22.544	
**	4.000		0.8	0.8	0.8	0.0	0.000	0.000	0.000	

Cross section No. 451.1 = CS 1 - steel alone

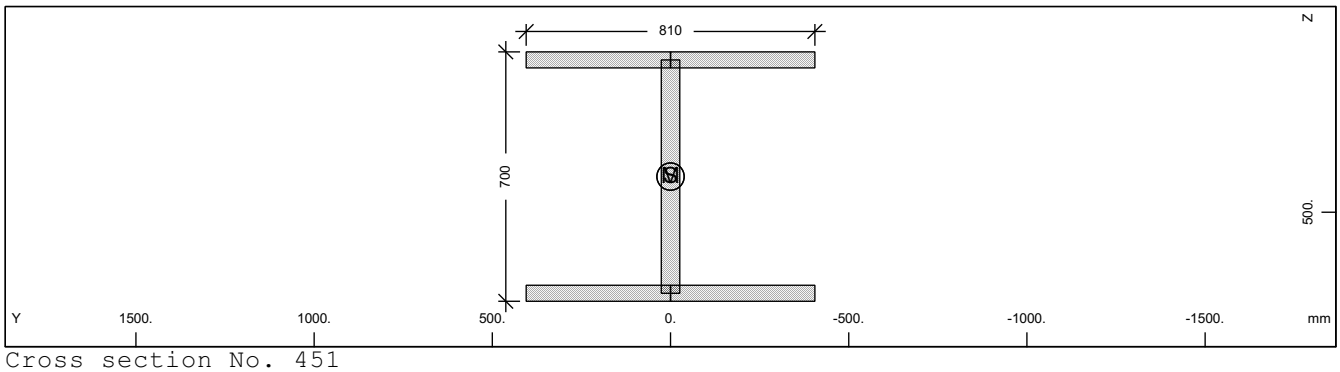

Cross section No. 451

SOFiSTiK AG - www.sofistik.de

Composite bridge 38+50+38, b=14.25m, 2x2HL1100R HISTAR460 , slab 0.30m C30/37

Static properties of cross section

Mat NoR	A[cm2] It[cm4]	Ay/Az/Ayz [cm2]	Iy/Iz/Iyz [cm4]	ys/zs [mm]	modules [N/mm2]	gam [kN/m]
1	1069.60	607.50	903669.7	0.0	210000	8.40
	6270.0	288.17	398580.9	400.0	80769	

Additional static properties of cross section

Alfa-T [1/°K]	ymin ymax [mm]	zmin zmax [mm]	hymin hzmin [mm]	AK AB [cm2]	MB	Tau-T Tau-B [1/m3]	Tau-Vy Tau-Vz [1/m2]
1.2E-05	-405.0	-350.0		5.910E+02		6.508E+02	2.058E+01
	405.0	350.0				1.189E+02	3.134E+01

Section values for warping

Wmin[cm2]	Wmax[cm2]	CM[cm6]	CMS[cm4]	ASwyy[cm6]	ASwzz[cm6]	ry[mm]	rz[mm]
-1326.38	1326.38	427502762.	651581.6	-3.01	-6.82	0.0	0.0

Design values of cross section

Mat NoR	A[cm2] It[cm4]	Ay/Az/Ayz [cm2]	Iy/Iz/Iyz [cm4]	ys/zs [mm]	modules [N/mm2]	gam [kN/m]
1	1069.60	607.50	903669.7	0.0	182609	8.40
	6270.0	288.17	398580.9	400.0	70234	

Design forces and moments
(C/E = characteristic plastic/elastic, D=plast.Design, F=elast. Design)

	N[kN]	Vy[kN]	Vz[kN]	Mt[kNm]	My[kNm]	Mz[kNm]	y[mm]	z[mm]	BUCK
C	35831.6	14099.76	6587.62	488.52	9866.45	5093.69	0.0	400.0	c d
C	0.0				0.00	0.00	0.0	0.0	COMB
E	35831.6	9399.84	6171.79	297.21	8649.41	3296.90	0.0	400.0	
D	31157.9	12260.66	5728.37	424.80	8579.52	4429.29	0.0	400.0	
D	0.0				0.00	0.00	0.0	0.0	COMB
F	31157.9	8173.78	5366.77	258.44	7521.22	2866.87	0.0	400.0	

Additional Design Data

M	periphery-O/-I [m2/m] [m2/m]	deff [mm]	t-min [mm]	t-max [mm]	SMP [o/o]	thet-p [tm2/m]	thet-y [tm2/m]	thet-z [tm2/m]	thet-yz [tm2/m]
	4.550	47.0	45.0	52.0	0.0	0.102	0.071	0.031	

Cross section No. 451.2 = CS 10 - prefab. slab C1

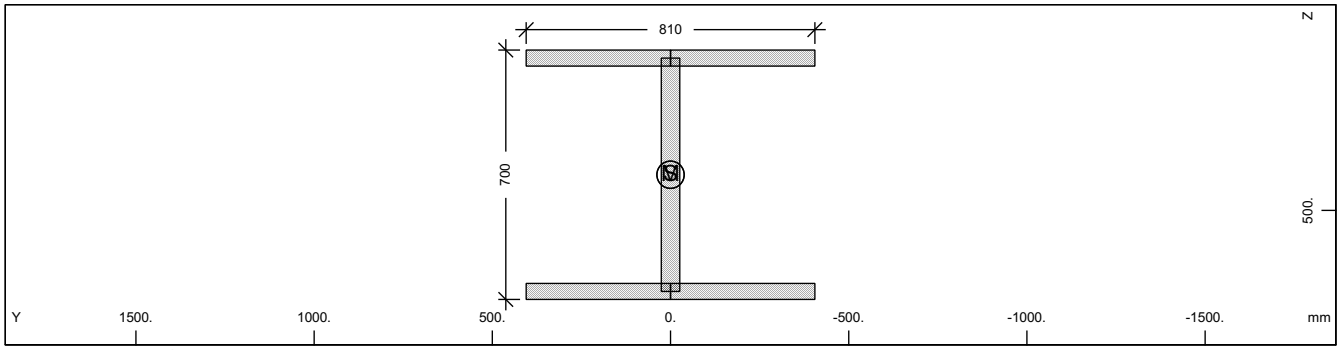

Cross section No. 451

Static properties of cross section

Mat NoR	A[cm2] It[cm4]	Ay/Az/Ayz [cm2]	Iy/Iz/Iyz [cm4]	ys/zs [mm]	modules [N/mm2]	gam [kN/m]
1	1069.60	607.50	903669.7	0.0	210000	8.40
	6270.0	288.17	398580.9	400.0	80769	

Additional static properties of cross section

Alfa-T [1/°K]	ymin ymax [mm]	zmin zmax [mm]	hymin hzmin [mm]	AK AB [cm2]	MB	Tau-T Tau-B [1/m3]	Tau-Vy Tau-Vz [1/m2]
1.2E-05	-405.0	-350.0		5.910E+02		6.508E+02	2.058E+01
	405.0	350.0				1.189E+02	3.134E+01

SOFiSTiK AG - www.sofistik.de

Composite bridge 38+50+38, b=14.25m, 2x2HL1100R HISTAR460 , slab 0.30m C30/37

Section values for warping

Wmin[cm2]	Wmax[cm2]	CM[cm6]	CMS[cm4]	ASwyy[cm6]	ASwzz[cm6]	ry[mm]	rz[mm]
-1326.38	1326.38	427502762.	651581.6	-3.01	-6.82	0.0	0.0

Design values of cross section

Mat NoR	A[cm2] It[cm4]	Ay/Az/Ayz [cm2]	Iy/Iz/Iyz [cm4]	ys/zs [mm]	modules [N/mm2]	gam [kN/m]
1	1069.60	607.50	903669.7	0.0	182609	8.40
	6270.0	288.17	398580.9	400.0	70234	

Design forces and moments
(C/E = characteristic plastic/elastic, D=plast.Design, F=elast. Design)

	N[kN]	Vy[kN]	Vz[kN]	Mt[kNm]	My[kNm]	Mz[kNm]	y[mm]	z[mm]	BUCK
C	35831.6	14099.76	6587.62	488.52	9866.45	5093.69	0.0	400.0	c d
C	0.0				0.00	0.00	0.0	0.0	COMB
E	35831.6	9399.84	6171.79	297.21	8649.41	3296.90	0.0	400.0	
D	31157.9	12260.66	5728.37	424.80	8579.52	4429.29	0.0	400.0	
D	0.0				0.00	0.00	0.0	0.0	COMB
F	31157.9	8173.78	5366.77	258.44	7521.22	2866.87	0.0	400.0	

Additional Design Data

M	periphery-O/-I [m2/m]	[m2/m]	deff [mm]	t-min [mm]	t-max [mm]	SMP [o/o]	thet-p [tm2/m]	thet-y [tm2/m]	thet-z [tm2/m]	thet-yz [tm2/m]
	4.550		47.0	45.0	52.0	0.0	0.102	0.071	0.031	

Cross section No. 451.3 = CS 20 - in-situ conc:C2

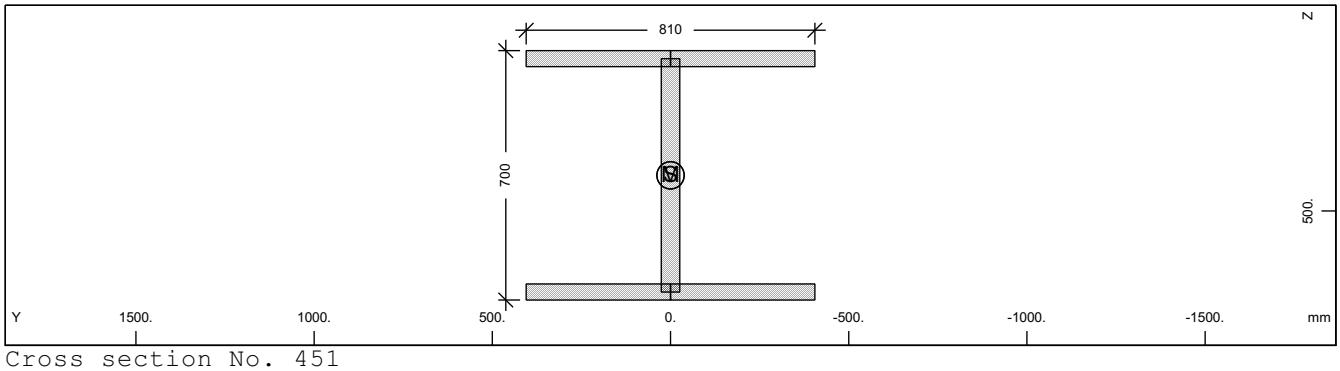

Cross section No. 451

Static properties of cross section

Mat NoR	A[cm2] It[cm4]	Ay/Az/Ayz [cm2]	Iy/Iz/Iyz [cm4]	ys/zs [mm]	modules [N/mm2]	gam [kN/m]
1	1069.60	607.50	903669.7	0.0	210000	8.40
	6270.0	288.17	398580.9	400.0	80769	

Additional static properties of cross section

Alfa-T [1/°K]	ymin ymax [mm]	zmin zmax [mm]	hymin hzmin [mm]	AK AB [cm2]	MB	Tau-T Tau-B [1/m3]	Tau-Vy Tau-Vz [1/m2]
1.2E-05	-405.0	-350.0		5.910E+02		6.508E+02	2.058E+01
	405.0	350.0				1.189E+02	3.134E+01

Section values for warping

Wmin[cm2]	Wmax[cm2]	CM[cm6]	CMS[cm4]	ASwyy[cm6]	ASwzz[cm6]	ry[mm]	rz[mm]
-1326.38	1326.38	427502762.	651581.6	-3.01	-6.82	0.0	0.0

Design values of cross section

Mat NoR	A[cm2] It[cm4]	Ay/Az/Ayz [cm2]	Iy/Iz/Iyz [cm4]	ys/zs [mm]	modules [N/mm2]	gam [kN/m]
1	1069.60	607.50	903669.7	0.0	182609	8.40
	6270.0	288.17	398580.9	400.0	70234	

SOFiSTiK AG - www.sofistik.de

Composite bridge 38+50+38, b=14.25m, 2x2HL1100R HISTAR460 , slab 0.30m C30/37

Design forces and moments
(C/E = characteristic plastic/elastic, D=plast.Design, F=elast. Design)

	N[kN]	Vy[kN]	Vz[kN]	Mt[kNm]	My[kNm]	Mz[kNm]	y[mm]	z[mm]	BUCK
C	35831.6	14099.76	6587.62	488.52	9866.45	5093.69	0.0	400.0	c d
C	0.0				0.00	0.00	0.0	0.0	COMB
E	35831.6	9399.84	6171.79	297.21	8649.41	3296.90	0.0	400.0	
D	31157.9	12260.66	5728.37	424.80	8579.52	4429.29	0.0	400.0	
D	0.0				0.00	0.00	0.0	0.0	COMB
F	31157.9	8173.78	5366.77	258.44	7521.22	2866.87	0.0	400.0	

Additional Design Data

M	periphery-O/-I [m2/m]	[m2/m]	deff [mm]	t-min [mm]	t-max [mm]	SMP [o/o]	thet-p [tm2/m]	thet-y [tm2/m]	thet-z [tm2/m]	thet-yz [tm2/m]
	4.550		47.0	45.0	52.0	0.0	0.102	0.071	0.031	

Cross section No. 451.4 = CS 21 - reinf active:C2

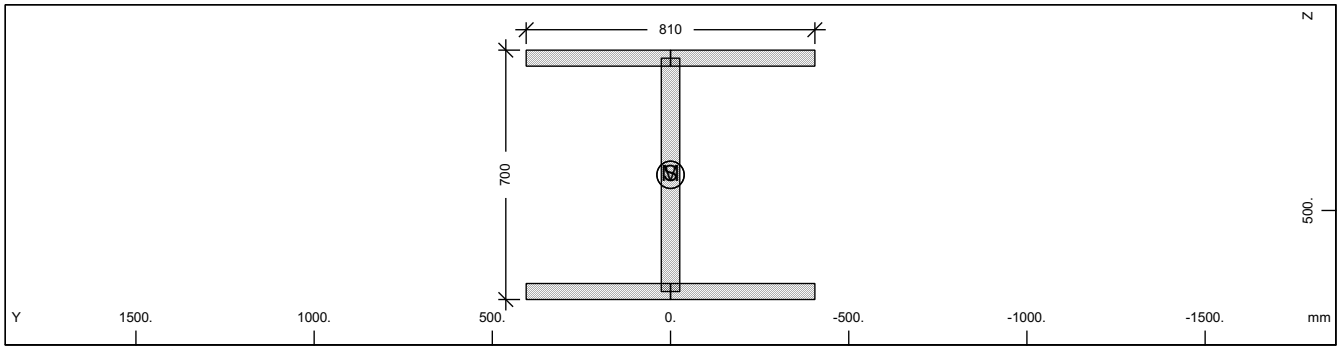

Cross section No. 451

Static properties of cross section

Mat NoR	A[cm2] It[cm4]	Ay/Az/Ayz [cm2]	Iy/Iz/Iyz [cm4]	ys/zs [mm]	modules [N/mm2]	gam [kN/m]
1	1069.60	607.50	903669.7	0.0	210000	8.40
	6270.0	288.17	398580.9	400.0	80769	

Additional static properties of cross section

Alfa-T [1/°K]	ymin ymax [mm]	zmin zmax [mm]	hymin hzmin [mm]	AK AB [cm2]	MB	Tau-T Tau-B [1/m3]	Tau-Vy Tau-Vz [1/m2]
1.2E-05	-405.0	-350.0		5.910E+02		6.508E+02	2.058E+01
	405.0	350.0				1.189E+02	3.134E+01

Section values for warping

Wmin[cm2]	Wmax[cm2]	CM[cm6]	CMS[cm4]	ASwyy[cm6]	ASwzz[cm6]	ry[mm]	rz[mm]
-1326.38	1326.38	427502762.	651581.6	-3.01	-6.82	0.0	0.0

Design values of cross section

Mat NoR	A[cm2] It[cm4]	Ay/Az/Ayz [cm2]	Iy/Iz/Iyz [cm4]	ys/zs [mm]	modules [N/mm2]	gam [kN/m]
1	1069.60	607.50	903669.7	0.0	182609	8.40
	6270.0	288.17	398580.9	400.0	70234	

Design forces and moments
(C/E = characteristic plastic/elastic, D=plast.Design, F=elast. Design)

	N[kN]	Vy[kN]	Vz[kN]	Mt[kNm]	My[kNm]	Mz[kNm]	y[mm]	z[mm]	BUCK
C	35831.6	14099.76	6587.62	488.52	9866.45	5093.69	0.0	400.0	c d
C	0.0				0.00	0.00	0.0	0.0	COMB
E	35831.6	9399.84	6171.79	297.21	8649.41	3296.90	0.0	400.0	
D	31157.9	12260.66	5728.37	424.80	8579.52	4429.29	0.0	400.0	
D	0.0				0.00	0.00	0.0	0.0	COMB
F	31157.9	8173.78	5366.77	258.44	7521.22	2866.87	0.0	400.0	

SOFiSTiK AG - www.sofistik.de

Composite bridge 38+50+38, b=14.25m, 2x2HL1100R HISTAR460 , slab 0.30m C30/37

Additional Design Data

M	periphery-O/-I [m2/m]	[m2/m]	deff [mm]	t-min [mm]	t-max [mm]	SMP [o/o]	thet-p [tm2/m]	thet-y [tm2/m]	thet-z [tm2/m]	thet-yz [tm2/m]
	4.550		47.0	45.0	52.0	0.0	0.102	0.071	0.031	

Cross section No. 451.5 = CS 30 - in-situ conc:C3

Cross section No. 452 - VFT

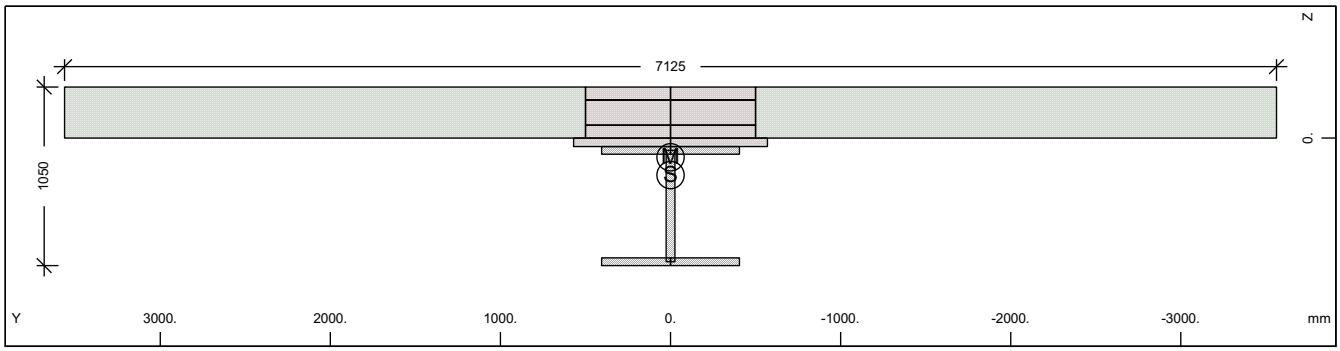

Cross section No. 452 - VFT

Static properties of cross section

Mat NoR	A[cm2] It[cm4]	Ay/Az/Ayz [cm2]	Iy/Iz/Iyz [cm4]	ys/zs [mm]	y/z-sc [mm]	modules [N/mm2]	gam [kN/m]
1	1642.18	1074.80	1946674.3	0.0	0.0	210000	63.26
	6270.0	462.67	897984.0	217.7	112.9	80769	

Additional static properties of cross section

Alfa-T [1/°K]	ymin ymax [mm]	zmin zmax [mm]	hymin hzmin [mm]	AK AB [cm2]	MB	Tau-T Tau-B [1/m3]	Tau-Vy Tau-Vz [1/m2]
1.2E-05	-3562.5	-517.7		2.115E+03		3.225E+01	1.326E+01
	3562.5	532.3		2.195E+04		1.189E+02	2.503E+01

Section values for warping

Wmin[cm2]	Wmax[cm2]	CM[cm6]	CMS[cm4]	ASwyy[cm6]	ASwzz[cm6]	ry[mm]	rz[mm]
-9367.06	9367.06	1042624125.	1423880.6	2.35	5.10	0.0	321.1

Partial cross sections

Mat NoR	A[cm2] It[cm4]	Ay/Az/Ayz [cm2]	Iy/Iz/Iyz [cm4]	ys/zs [mm]	modules [N/mm2]	gam [kN/m]
1	1069.60	374.63	903669.7	0.0	210000	8.40
	7990.7	428.98	398580.9	400.0	80769	
30	3570.00	4030.92	146691.2	0.0	32837	8.93
	904750.1	193.18	3117310.1	-122.1	13682	
31	18375.00	41481168.	0.0	0.0	0	45.94
	5512501.0	37388.97901762872.		-150.0	0	
300	15.07	17.99	847.8	0.0	200000	0.00
	0.0	1.01	12560.0	-150.0	76923	

Design values of cross section

Mat NoR	A[cm2] It[cm4]	Ay/Az/Ayz [cm2]	Iy/Iz/Iyz [cm4]	ys/zs [mm]	modules [N/mm2]	gam [kN/m]
1	1511.92	915.42	1777982.7	0.0	182609	63.26
	6270.0	455.03	784247.7	247.0	70234	

Design forces and moments
(C/E = characteristic plastic/elastic, D=plast.Design, F=elast. Design)

	N[kN]	Vy[kN]	Vz[kN]	Mt[kNm]	My[kNm]	Mz[kNm]	y[mm]	z[mm]	BUCK
C	36585.2	50744.10	35388.07	99055.71	22135.36	59290.14	297.4	-132.	c c
C	-60238.3				34632.55	0.00	0.0	217.7	COMB
C	-32917.5				0.00	62637.10	0.0	0.0	COMB
C	-102420.	50744.10	35388.07	99055.72	-10272.8	-59290.1	-297.	378.2	

SOFiSTiK AG - www.sofistik.de

Composite bridge 38+50+38, b=14.25m, 2x2HL1100R HISTAR460 , slab 0.30m C30/37

Design forces and moments
(C/E = characteristic plastic/elastic, D=plast.Design, F=elast. Design)

	N[kN]	Vy[kN]	Vz[kN]	Mt[kNm]	My[kNm]	Mz[kNm]	y[mm]	z[mm]	BUCK
C	-5596.7				-10722.3	0.00	0.0	217.7	COMB
C	-32917.5				0.00	-62637.1	0.0	0.0	COMB
E	55012.9	5833.03	7727.07	523.56	7213.94	3022.57	0.0	217.7	
E	-31506.7	5833.03	7727.07	523.56	-12252.0	-3022.57	0.0	217.7	
D	31813.2	36778.50	25464.89	66149.80	18453.32	41510.95	197.9	-81.3	
D	-39023.3				25263.91	0.00	0.0	217.7	COMB
D	-21945.0				0.00	42829.79	0.0	0.0	COMB
D	-75703.2	36778.50	25464.89	66149.80	-8932.85	-41511.0	-198.	378.3	
D	-4866.7				-9323.74	0.00	0.0	217.7	COMB
D	-21945.0				0.00	-42829.8	0.0	0.0	COMB
F	47837.3	3888.69	6719.19	349.04	4809.30	2015.05	0.0	217.7	
F	-21004.4	3888.69	6719.19	349.04	-10653.9	-2015.05	0.0	217.7	

Additional Design Data

M	periphery-O/-I [m2/m]	[m2/m]	deff [mm]	t-min [mm]	t-max [mm]	SMP [o/o]	thet-p [tm2/m]	thet-y [tm2/m]	thet-z [tm2/m]	thet-yz [tm2/m]
	25.080		13.1	0.8	300.0	0.0	22.945	0.292	22.653	
1	4.550		47.0	45.0	52.0	0.0	0.102	0.071	0.031	
30	4.280		600.0	50.0	300.0	0.0	0.082	0.004	0.078	
31	12.250		300.0	300.0	300.0	0.0	22.544		22.544	
**	4.000		0.8	0.8	0.8	0.0	0.000	0.000	0.000	

Cross section No. 452.1 = CS 1 - steel alone

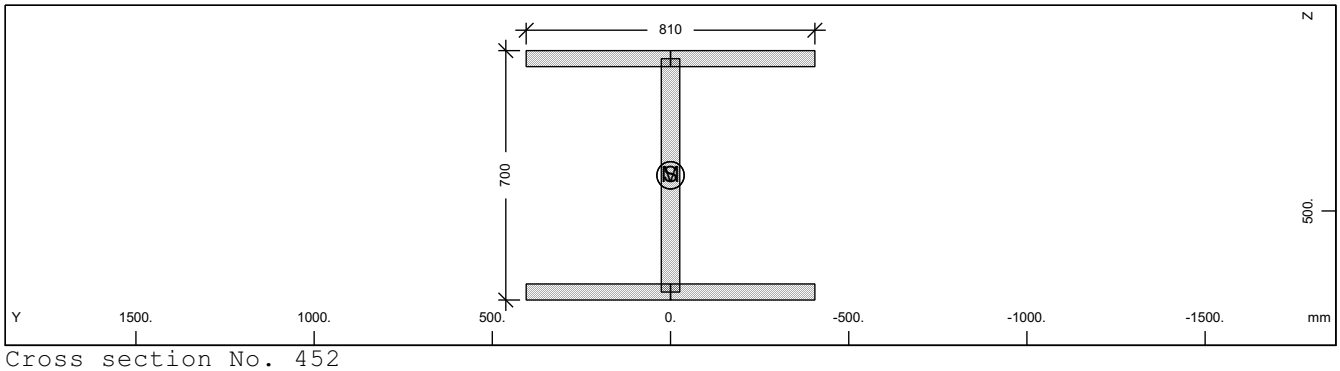

Cross section No. 452

Static properties of cross section

Mat NoR	A[cm2] It[cm4]	Ay/Az/Ayz [cm2]	Iy/Iz/Iyz [cm4]	ys/zs [mm]	modules [N/mm2]	gam [kN/m]
1	1069.60	607.50	903669.7	0.0	210000	8.40
	6270.0	288.17	398580.9	400.0	80769	

Additional static properties of cross section

Alfa-T [1/°K]	ymin ymax [mm]	zmin zmax [mm]	hymin hzmin [mm]	AK AB [cm2]	MB	Tau-T Tau-B [1/m3]	Tau-Vy Tau-Vz [1/m2]
1.2E-05	-405.0	-350.0		5.910E+02		6.508E+02	2.058E+01
	405.0	350.0				1.189E+02	3.134E+01

Section values for warping

Wmin[cm2]	Wmax[cm2]	CM[cm6]	CMS[cm4]	ASwyy[cm6]	ASwzz[cm6]	ry[mm]	rz[mm]
-1326.38	1326.38	427502762.	651581.6	-3.01	-6.82	0.0	0.0

Design values of cross section

Mat NoR	A[cm2] It[cm4]	Ay/Az/Ayz [cm2]	Iy/Iz/Iyz [cm4]	ys/zs [mm]	modules [N/mm2]	gam [kN/m]
1	1069.60	607.50	903669.7	0.0	182609	8.40
	6270.0	288.17	398580.9	400.0	70234	

SOFiSTiK AG - www.sofistik.de

Composite bridge 38+50+38, b=14.25m, 2x2HL1100R HISTAR460 , slab 0.30m C30/37

Design forces and moments
(C/E = characteristic plastic/elastic, D=plast.Design, F=elast. Design)

	N[kN]	Vy[kN]	Vz[kN]	Mt[kNm]	My[kNm]	Mz[kNm]	y[mm]	z[mm]	BUCK
C	35831.6	14099.76	6587.62	488.52	9866.45	5093.69	0.0	400.0	c d
C	0.0				0.00	0.00	0.0	0.0	COMB
E	35831.6	9399.84	6171.79	297.21	8649.41	3296.90	0.0	400.0	
D	31157.9	12260.66	5728.37	424.80	8579.52	4429.29	0.0	400.0	
D	0.0				0.00	0.00	0.0	0.0	COMB
F	31157.9	8173.78	5366.77	258.44	7521.22	2866.87	0.0	400.0	

Additional Design Data

M	periphery-O/-I [m2/m]	[m2/m]	deff [mm]	t-min [mm]	t-max [mm]	SMP [o/o]	thet-p [tm2/m]	thet-y [tm2/m]	thet-z [tm2/m]	thet-yz [tm2/m]
	4.550		47.0	45.0	52.0	0.0	0.102	0.071	0.031	

Cross section No. 452.2 = CS 10 - prefab. slab C1

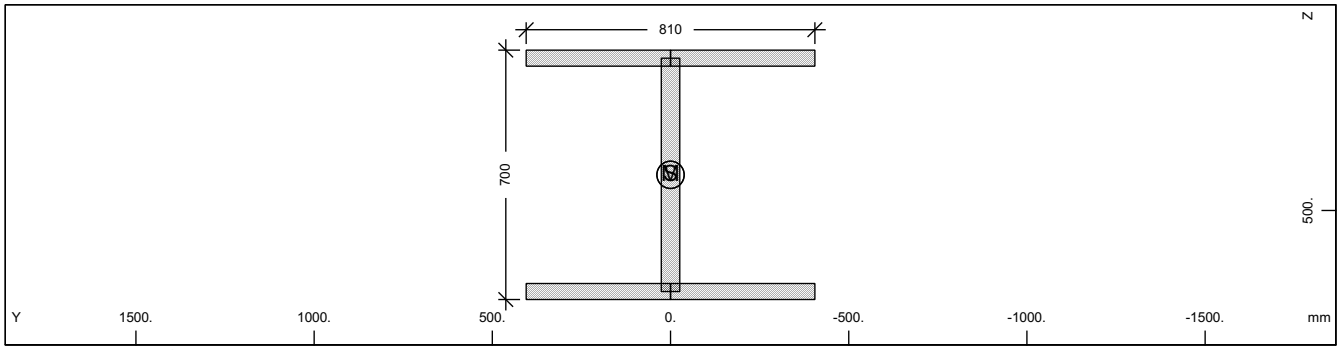

Cross section No. 452

Static properties of cross section

Mat NoR	A[cm2] It[cm4]	Ay/Az/Ayz [cm2]	Iy/Iz/Iyz [cm4]	ys/zs [mm]	modules [N/mm2]	gam [kN/m]
1	1069.60	607.50	903669.7	0.0	210000	8.40
	6270.0	288.17	398580.9	400.0	80769	

Additional static properties of cross section

Alfa-T [1/°K]	ymin ymax [mm]	zmin zmax [mm]	hymin hzmin [mm]	AK AB [cm2]	MB	Tau-T Tau-B [1/m3]	Tau-Vy Tau-Vz [1/m2]
1.2E-05	-405.0	-350.0		5.910E+02		6.508E+02	2.058E+01
	405.0	350.0				1.189E+02	3.134E+01

Section values for warping

Wmin[cm2]	Wmax[cm2]	CM[cm6]	CMS[cm4]	ASwyy[cm6]	ASwzz[cm6]	ry[mm]	rz[mm]
-1326.38	1326.38	427502762.	651581.6	-3.01	-6.82	0.0	0.0

Design values of cross section

Mat NoR	A[cm2] It[cm4]	Ay/Az/Ayz [cm2]	Iy/Iz/Iyz [cm4]	ys/zs [mm]	modules [N/mm2]	gam [kN/m]
1	1069.60	607.50	903669.7	0.0	182609	8.40
	6270.0	288.17	398580.9	400.0	70234	

Design forces and moments
(C/E = characteristic plastic/elastic, D=plast.Design, F=elast. Design)

	N[kN]	Vy[kN]	Vz[kN]	Mt[kNm]	My[kNm]	Mz[kNm]	y[mm]	z[mm]	BUCK
C	35831.6	14099.76	6587.62	488.52	9866.45	5093.69	0.0	400.0	c d
C	0.0				0.00	0.00	0.0	0.0	COMB
E	35831.6	9399.84	6171.79	297.21	8649.41	3296.90	0.0	400.0	
D	31157.9	12260.66	5728.37	424.80	8579.52	4429.29	0.0	400.0	
D	0.0				0.00	0.00	0.0	0.0	COMB
F	31157.9	8173.78	5366.77	258.44	7521.22	2866.87	0.0	400.0	

SOFiSTiK AG - www.sofistik.de

Composite bridge 38+50+38, b=14.25m, 2x2HL1100R HISTAR460 , slab 0.30m C30/37

Additional Design Data

M	periphery-O/-I [m2/m]	[m2/m]	deff [mm]	t-min [mm]	t-max [mm]	SMP [o/o]	thet-p [tm2/m]	thet-y [tm2/m]	thet-z [tm2/m]	thet-yz [tm2/m]
	4.550		47.0	45.0	52.0	0.0	0.102	0.071	0.031	

Cross section No. 452.3 = CS 20 - in-situ conc:C2

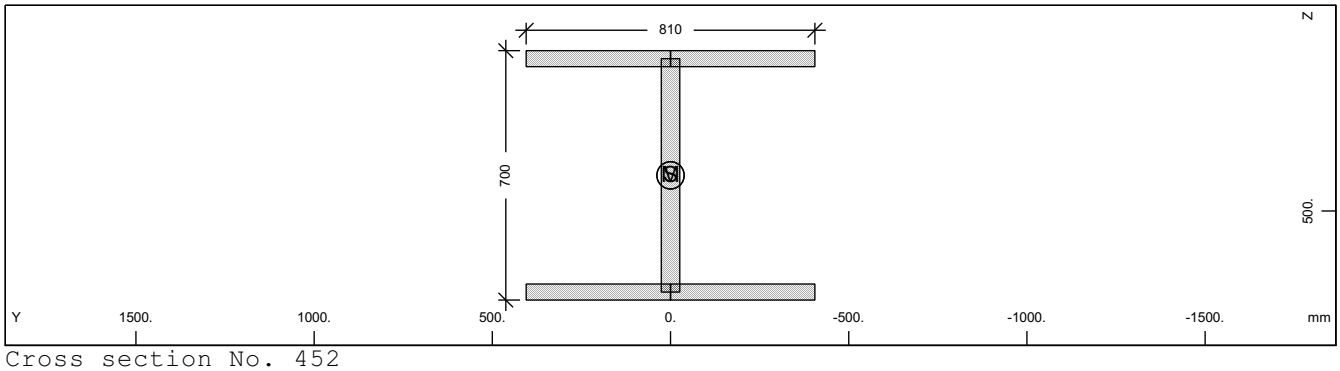

Cross section No. 452

Static properties of cross section

Mat NoR	A[cm2] It[cm4]	Ay/Az/Ayz [cm2]	Iy/Iz/Iyz [cm4]	ys/zs [mm]	modules [N/mm2]	gam [kN/m]
1	1069.60	607.50	903669.7	0.0	210000	8.40
	6270.0	288.17	398580.9	400.0	80769	

Additional static properties of cross section

Alfa-T [1/°K]	ymin ymax [mm]	zmin zmax [mm]	hymin hzmin [mm]	AK AB [cm2]	MB	Tau-T Tau-B [1/m3]	Tau-Vy Tau-Vz [1/m2]
1.2E-05	-405.0	-350.0		5.910E+02		6.508E+02	2.058E+01
	405.0	350.0				1.189E+02	3.134E+01

Section values for warping

Wmin[cm2]	Wmax[cm2]	CM[cm6]	CMS[cm4]	ASwyy[cm6]	ASwzz[cm6]	ry[mm]	rz[mm]
-1326.38	1326.38	427502762.	651581.6	-3.01	-6.82	0.0	0.0

Design values of cross section

Mat NoR	A[cm2] It[cm4]	Ay/Az/Ayz [cm2]	Iy/Iz/Iyz [cm4]	ys/zs [mm]	modules [N/mm2]	gam [kN/m]
1	1069.60	607.50	903669.7	0.0	182609	8.40
	6270.0	288.17	398580.9	400.0	70234	

Design forces and moments
(C/E = characteristic plastic/elastic, D=plast.Design, F=elast. Design)

	N[kN]	Vy[kN]	Vz[kN]	Mt[kNm]	My[kNm]	Mz[kNm]	y[mm]	z[mm]	BUCK
C	35831.6	14099.76	6587.62	488.52	9866.45	5093.69	0.0	400.0	c d
C	0.0				0.00	0.00	0.0	0.0	COMB
E	35831.6	9399.84	6171.79	297.21	8649.41	3296.90	0.0	400.0	
D	31157.9	12260.66	5728.37	424.80	8579.52	4429.29	0.0	400.0	
D	0.0				0.00	0.00	0.0	0.0	COMB
F	31157.9	8173.78	5366.77	258.44	7521.22	2866.87	0.0	400.0	

Additional Design Data

M	periphery-O/-I [m2/m]	[m2/m]	deff [mm]	t-min [mm]	t-max [mm]	SMP [o/o]	thet-p [tm2/m]	thet-y [tm2/m]	thet-z [tm2/m]	thet-yz [tm2/m]
	4.550		47.0	45.0	52.0	0.0	0.102	0.071	0.031	

SOFiSTiK AG - www.sofistik.de

Composite bridge 38+50+38, b=14.25m, 2x2HL1100R HISTAR460 , slab 0.30m C30/37

Cross section No. 452.4 = CS 21 - reinf active:C2

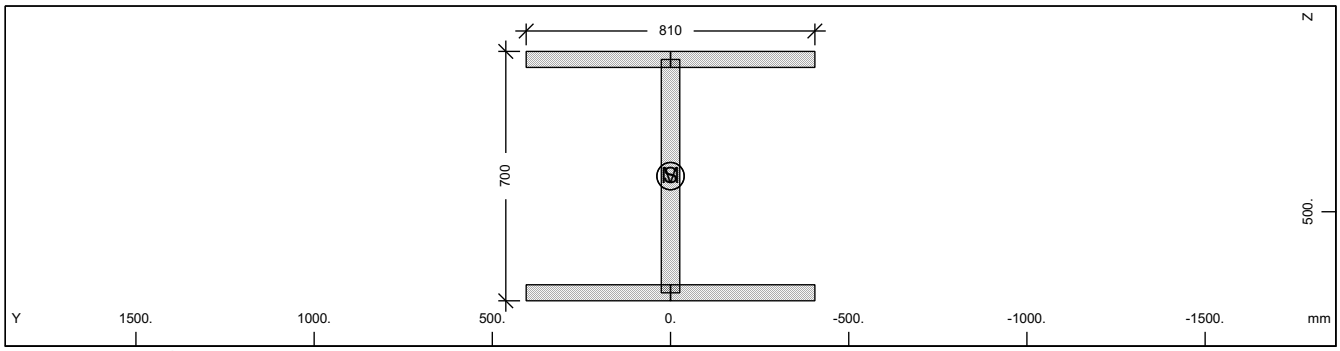

Cross section No. 452

Static properties of cross section

Mat NoR	A[cm2] It[cm4]	Ay/Az/Ayz [cm2]	Iy/Iz/Iyz [cm4]	ys/zs [mm]	modules [N/mm2]	gam [kN/m]
1	1069.60	607.50	903669.7	0.0	210000	8.40
	6270.0	288.17	398580.9	400.0	80769	

Additional static properties of cross section

Alfa-T [1/°K]	ymin ymax [mm]	zmin zmax [mm]	hymin hzmin [mm]	AK AB [cm2]	MB	Tau-T Tau-B [1/m3]	Tau-Vy Tau-Vz [1/m2]
1.2E-05	-405.0	-350.0		5.910E+02		6.508E+02	2.058E+01
	405.0	350.0				1.189E+02	3.134E+01

Section values for warping

Wmin[cm2]	Wmax[cm2]	CM[cm6]	CMS[cm4]	ASwyy[cm6]	ASwzz[cm6]	ry[mm]	rz[mm]
-1326.38	1326.38	427502762.	651581.6	-3.01	-6.82	0.0	0.0

Design values of cross section

Mat NoR	A[cm2] It[cm4]	Ay/Az/Ayz [cm2]	Iy/Iz/Iyz [cm4]	ys/zs [mm]	modules [N/mm2]	gam [kN/m]
1	1069.60	607.50	903669.7	0.0	182609	8.40
	6270.0	288.17	398580.9	400.0	70234	

Design forces and moments
(C/E = characteristic plastic/elastic, D=plast.Design, F=elast. Design)

	N[kN]	Vy[kN]	Vz[kN]	Mt[kNm]	My[kNm]	Mz[kNm]	y[mm]	z[mm]	BUCK
C	35831.6	14099.76	6587.62	488.52	9866.45	5093.69	0.0	400.0	c d
C	0.0				0.00	0.00	0.0	0.0	COMB
E	35831.6	9399.84	6171.79	297.21	8649.41	3296.90	0.0	400.0	
D	31157.9	12260.66	5728.37	424.80	8579.52	4429.29	0.0	400.0	
D	0.0				0.00	0.00	0.0	0.0	COMB
F	31157.9	8173.78	5366.77	258.44	7521.22	2866.87	0.0	400.0	

Additional Design Data

M	periphery-O/-I [m2/m] [m2/m]	deff [mm]	t-min [mm]	t-max [mm]	SMP [o/o]	thet-p [tm2/m]	thet-y [tm2/m]	thet-z [tm2/m]	thet-yz [tm2/m]
	4.550	47.0	45.0	52.0	0.0	0.102	0.071	0.031	

SOFiSTiK AG - www.sofistik.de

Composite bridge 38+50+38, b=14.25m, 2x2HL1100R HISTAR460 , slab 0.30m C30/37

Cross section No. 452.5 = CS 30 - in-situ conc:C3

Cross section No. 453 - VFT

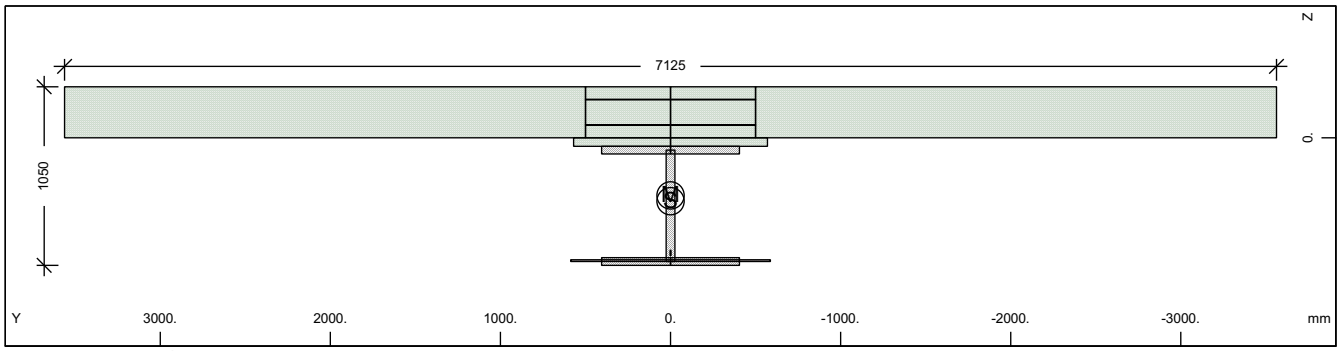

Cross section No. 453 - VFT

Static properties of cross section

Mat NoR	A[cm2] It[cm4]	Ay/Az/Ayz [cm2]	Iy/Iz/Iyz [cm4]	ys/zs [mm]	y/z-sc [mm]	modules [N/mm2]	gam [kN/m]
1	1135.99	645.43	1086280.2	0.0	0.0	210000	63.55
	6270.0	327.35	448426.4	372.9	338.9	80769	

Additional static properties of cross section

Alfa-T [1/°K]	ymin ymax [mm]	zmin zmax [mm]	hymin hzmin [mm]	AK AB [cm2]	MB	Tau-T Tau-B [1/m3]	Tau-Vy Tau-Vz [1/m2]
1.2E-05	-3562.5	-672.9		9.935E+01		1.715E+02	2.655E+01
	3562.5	377.1		2.206E+04		1.189E+02	2.907E+01

Section values for warping

Wmin[cm2]	Wmax[cm2]	CM[cm6]	CMS[cm4]	ASwyy[cm6]	ASwzz[cm6]	ry[mm]	rz[mm]
-17415.78	17415.78	564328746.	771743.0	0.60	1.46	0.0	40.8

Partial cross sections

Mat NoR	A[cm2] It[cm4]	Ay/Az/Ayz [cm2]	Iy/Iz/Iyz [cm4]	ys/zs [mm]	modules [N/mm2]	gam [kN/m]
1	1069.60	541.76	903669.7	0.0	210000	8.40
	7990.7	313.84	398580.9	400.0	80769	
25	117.40		9.8	0.0	10667	0.29
	539368.1	0.00	0.0	722.5	4444	
210	0.64	0.00	0.0	0.0	200000	0.00
	2.2	0.00	0.0	677.5	76923	
31	21945.00	81034377.	170028.4	0.0	0	54.86
	6417251.4	191356.89	904880243.	-145.5	0	
300	62.80	108.42	3532.5	0.0	200000	0.00
	2.1	14.01	52333.3	-150.0	76923	

Design values of cross section

Mat NoR	A[cm2] It[cm4]	Ay/Az/Ayz [cm2]	Iy/Iz/Iyz [cm4]	ys/zs [mm]	modules [N/mm2]	gam [kN/m]
1	1134.59	645.34	1084577.3	0.0	182609	63.55
	6270.0	327.18	448425.4	372.5	70234	

Design forces and moments
(C/E = characteristic plastic/elastic, D=plast.Design, F=elast. Design)

	N[kN]	Vy[kN]	Vz[kN]	Mt[kNm]	My[kNm]	Mz[kNm]	y[mm]	z[mm]	BUCK
C	39003.8	52140.45	36043.66	99179.80	22340.65	60206.52	279.8	-131.	c c
C	-68069.4				45787.38	0.00	0.0	372.9	COMB
C	-33093.6				0.00	63285.64	0.0	0.0	COMB
C	262309.1	52140.45	36043.66	99179.79	-11470.1	-60108.0	-280.	319.4	
C	1882.2				-11539.4	0.00	0.0	372.9	COMB
C	-33093.6				0.00	-63285.6	0.0	0.0	COMB
E	38055.5	10575.36	6652.62	96.23	9538.58	3709.21	0.0	372.9	

SOFiSTiK AG - www.sofistik.de

Composite bridge 38+50+38, b=14.25m, 2x2HL1100R HISTAR460 , slab 0.30m C30/37

Design forces and moments
(C/E = characteristic plastic/elastic, D=plast.Design, F=elast. Design)

	N[kN]	Vy[kN]	Vz[kN]	Mt[kNm]	My[kNm]	Mz[kNm]	y[mm]	z[mm]	BUCK
E	-38055.5	10575.36	6652.62	96.23	-9538.58	-3709.21	0.0	372.9	
D	33916.3	37992.72	25995.66	66234.62	18630.17	42170.82	186.1	-81.2	
D	-45818.5				32864.53	0.00	0.0	372.9	COMB
D	-22062.4				0.00	43383.25	0.0	0.0	COMB
D	166958.9	37992.72	25995.66	66234.62	-9972.46	-42127.1	-186.	317.5	
D	1693.7				-10032.5	0.00	0.0	372.9	COMB
D	-22062.4				0.00	-43383.3	0.0	0.0	COMB
F	33091.7	9195.97	5784.89	64.15	8294.41	3225.40	0.0	372.9	
F	-33091.7	9195.97	5784.89	64.15	-8294.41	-3225.40	0.0	372.9	

Additional Design Data

M	periphery-O/-I [m2/m]	[m2/m]	deff [mm]	t-min [mm]	t-max [mm]	SMP [o/o]	thet-p [tm2/m]	thet-y [tm2/m]	thet-z [tm2/m]	thet-yz [tm2/m]
	25.104		9.1	3.1	300.0	0.0	22.964	0.310	22.653	
1	4.550		47.0	45.0	52.0	0.0	0.102	0.071	0.031	
25	0.020		1174.0			0.0	0.000	0.000		
**	0.004		32.0			0.0	0.000		0.000	
31	16.530		265.5	50.0	300.0	0.0	22.626	0.004	22.622	
**	4.000		3.1	3.1	3.1	0.0	0.000	0.000	0.000	

Cross section No. 453.1 = CS 1 - steel alone

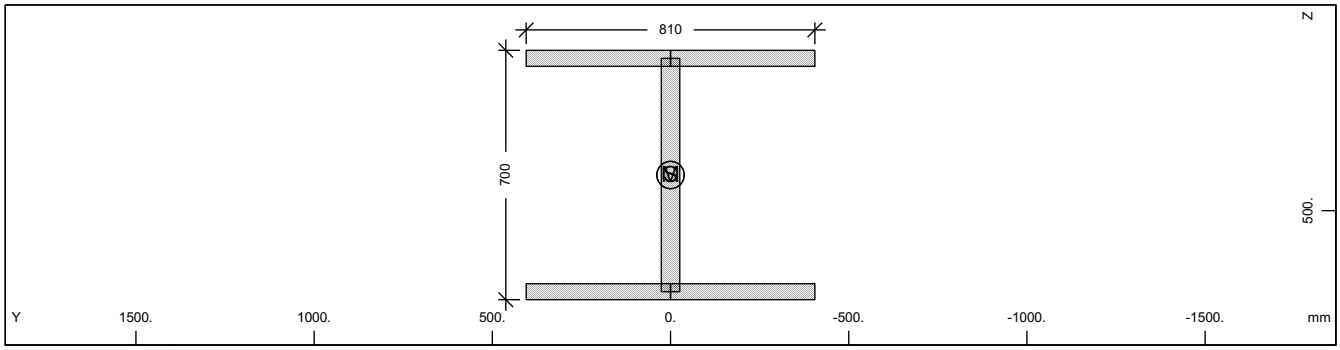

Cross section No. 453

Static properties of cross section

Mat NoR	A[cm2] It[cm4]	Ay/Az/Ayz [cm2]	Iy/Iz/Iyz [cm4]	ys/zs [mm]	modules [N/mm2]	gam [kN/m]
1	1069.60	607.50	903669.7	0.0	210000	8.40
	6270.0	288.17	398580.9	400.0	80769	

Additional static properties of cross section

Alfa-T [1/°K]	ymin ymax [mm]	zmin zmax [mm]	hymin hzmin [mm]	AK AB [cm2]	MB	Tau-T Tau-B [1/m3]	Tau-Vy Tau-Vz [1/m2]
1.2E-05	-405.0	-350.0		5.910E+02		6.508E+02	2.058E+01
	405.0	350.0				1.189E+02	3.134E+01

Section values for warping

Wmin[cm2]	Wmax[cm2]	CM[cm6]	CMS[cm4]	ASwyy[cm6]	ASwzz[cm6]	ry[mm]	rz[mm]
-1326.38	1326.38	427502762.	651581.6	-3.01	-6.82	0.0	0.0

Design values of cross section

Mat NoR	A[cm2] It[cm4]	Ay/Az/Ayz [cm2]	Iy/Iz/Iyz [cm4]	ys/zs [mm]	modules [N/mm2]	gam [kN/m]
1	1069.60	607.50	903669.7	0.0	182609	8.40
	6270.0	288.17	398580.9	400.0	70234	

SOFiSTiK AG - www.sofistik.de

Composite bridge 38+50+38, b=14.25m, 2x2HL1100R HISTAR460 , slab 0.30m C30/37

Design forces and moments
(C/E = characteristic plastic/elastic, D=plast.Design, F=elast. Design)

	N[kN]	Vy[kN]	Vz[kN]	Mt[kNm]	My[kNm]	Mz[kNm]	y[mm]	z[mm]	BUCK
C	35831.6	14099.76	6587.62	488.52	9866.45	5093.69	0.0	400.0	c d
C	0.0				0.00	0.00	0.0	0.0	COMB
E	35831.6	9399.84	6171.79	297.21	8649.41	3296.90	0.0	400.0	
D	31157.9	12260.66	5728.37	424.80	8579.52	4429.29	0.0	400.0	
D	0.0				0.00	0.00	0.0	0.0	COMB
F	31157.9	8173.78	5366.77	258.44	7521.22	2866.87	0.0	400.0	

Additional Design Data

M	periphery-O/-I [m2/m]	[m2/m]	deff [mm]	t-min [mm]	t-max [mm]	SMP [o/o]	thet-p [tm2/m]	thet-y [tm2/m]	thet-z [tm2/m]	thet-yz [tm2/m]
	4.550		47.0	45.0	52.0	0.0	0.102	0.071	0.031	

Cross section No. 453.2 = CS 10 - prefab. slab C1

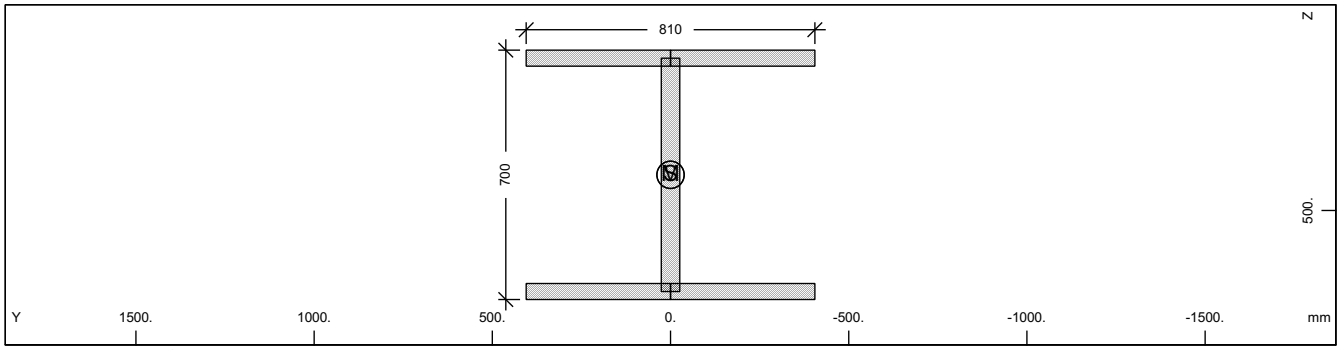

Cross section No. 453

Static properties of cross section

Mat NoR	A[cm2] It[cm4]	Ay/Az/Ayz [cm2]	Iy/Iz/Iyz [cm4]	ys/zs [mm]	modules [N/mm2]	gam [kN/m]
1	1069.60	607.50	903669.7	0.0	210000	8.40
	6270.0	288.17	398580.9	400.0	80769	

Additional static properties of cross section

Alfa-T [1/°K]	ymin ymax [mm]	zmin zmax [mm]	hymin hzmin [mm]	AK AB [cm2]	MB	Tau-T Tau-B [1/m3]	Tau-Vy Tau-Vz [1/m2]
1.2E-05	-405.0	-350.0		5.910E+02		6.508E+02	2.058E+01
	405.0	350.0				1.189E+02	3.134E+01

Section values for warping

Wmin[cm2]	Wmax[cm2]	CM[cm6]	CMS[cm4]	ASwyy[cm6]	ASwzz[cm6]	ry[mm]	rz[mm]
-1326.38	1326.38	427502762.	651581.6	-3.01	-6.82	0.0	0.0

Design values of cross section

Mat NoR	A[cm2] It[cm4]	Ay/Az/Ayz [cm2]	Iy/Iz/Iyz [cm4]	ys/zs [mm]	modules [N/mm2]	gam [kN/m]
1	1069.60	607.50	903669.7	0.0	182609	8.40
	6270.0	288.17	398580.9	400.0	70234	

Design forces and moments
(C/E = characteristic plastic/elastic, D=plast.Design, F=elast. Design)

	N[kN]	Vy[kN]	Vz[kN]	Mt[kNm]	My[kNm]	Mz[kNm]	y[mm]	z[mm]	BUCK
C	35831.6	14099.76	6587.62	488.52	9866.45	5093.69	0.0	400.0	c d
C	0.0				0.00	0.00	0.0	0.0	COMB
E	35831.6	9399.84	6171.79	297.21	8649.41	3296.90	0.0	400.0	
D	31157.9	12260.66	5728.37	424.80	8579.52	4429.29	0.0	400.0	
D	0.0				0.00	0.00	0.0	0.0	COMB
F	31157.9	8173.78	5366.77	258.44	7521.22	2866.87	0.0	400.0	

SOFiSTiK AG - www.sofistik.de

Composite bridge 38+50+38, b=14.25m, 2x2HL1100R HISTAR460 , slab 0.30m C30/37

Additional Design Data

M	periphery-O/-I [m2/m]	[m2/m]	deff [mm]	t-min [mm]	t-max [mm]	SMP [o/o]	thet-p [tm2/m]	thet-y [tm2/m]	thet-z [tm2/m]	thet-yz [tm2/m]
	4.550		47.0	45.0	52.0	0.0	0.102	0.071	0.031	

Cross section No. 453.3 = CS 20 - in-situ conc:C2

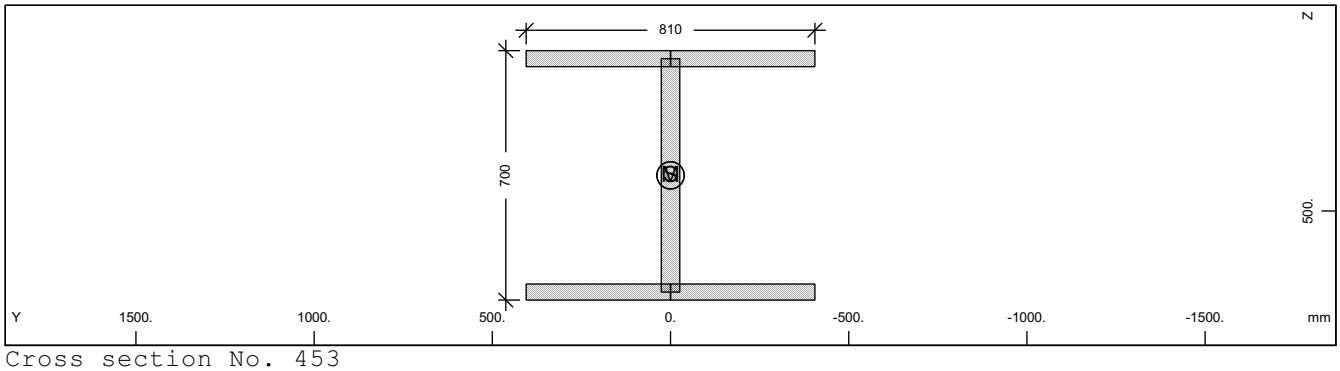

Cross section No. 453

Static properties of cross section

Mat NoR	A[cm2] It[cm4]	Ay/Az/Ayz [cm2]	Iy/Iz/Iyz [cm4]	ys/zs [mm]	modules [N/mm2]	gam [kN/m]
1	1069.60	607.50	903669.7	0.0	210000	8.40
	6270.0	288.17	398580.9	400.0	80769	

Additional static properties of cross section

Alfa-T [1/°K]	ymin ymax [mm]	zmin zmax [mm]	hymin hzmin [mm]	AK AB [cm2]	MB	Tau-T Tau-B [1/m3]	Tau-Vy Tau-Vz [1/m2]
1.2E-05	-405.0	-350.0		5.910E+02		6.508E+02	2.058E+01
	405.0	350.0				1.189E+02	3.134E+01

Section values for warping

Wmin[cm2]	Wmax[cm2]	CM[cm6]	CMS[cm4]	ASwyy[cm6]	ASwzz[cm6]	ry[mm]	rz[mm]
-1326.38	1326.38	427502762.	651581.6	-3.01	-6.82	0.0	0.0

Design values of cross section

Mat NoR	A[cm2] It[cm4]	Ay/Az/Ayz [cm2]	Iy/Iz/Iyz [cm4]	ys/zs [mm]	modules [N/mm2]	gam [kN/m]
1	1069.60	607.50	903669.7	0.0	182609	8.40
	6270.0	288.17	398580.9	400.0	70234	

Design forces and moments
(C/E = characteristic plastic/elastic, D=plast.Design, F=elast. Design)

	N[kN]	Vy[kN]	Vz[kN]	Mt[kNm]	My[kNm]	Mz[kNm]	y[mm]	z[mm]	BUCK
C	35831.6	14099.76	6587.62	488.52	9866.45	5093.69	0.0	400.0	c d
C	0.0				0.00	0.00	0.0	0.0	COMB
E	35831.6	9399.84	6171.79	297.21	8649.41	3296.90	0.0	400.0	
D	31157.9	12260.66	5728.37	424.80	8579.52	4429.29	0.0	400.0	
D	0.0				0.00	0.00	0.0	0.0	COMB
F	31157.9	8173.78	5366.77	258.44	7521.22	2866.87	0.0	400.0	

Additional Design Data

M	periphery-O/-I [m2/m]	[m2/m]	deff [mm]	t-min [mm]	t-max [mm]	SMP [o/o]	thet-p [tm2/m]	thet-y [tm2/m]	thet-z [tm2/m]	thet-yz [tm2/m]
	4.550		47.0	45.0	52.0	0.0	0.102	0.071	0.031	

SOFiSTiK AG - www.sofistik.de

Composite bridge 38+50+38, b=14.25m, 2x2HL1100R HISTAR460 , slab 0.30m C30/37

Cross section No. 453.4 = CS 21 - reinf active:C2

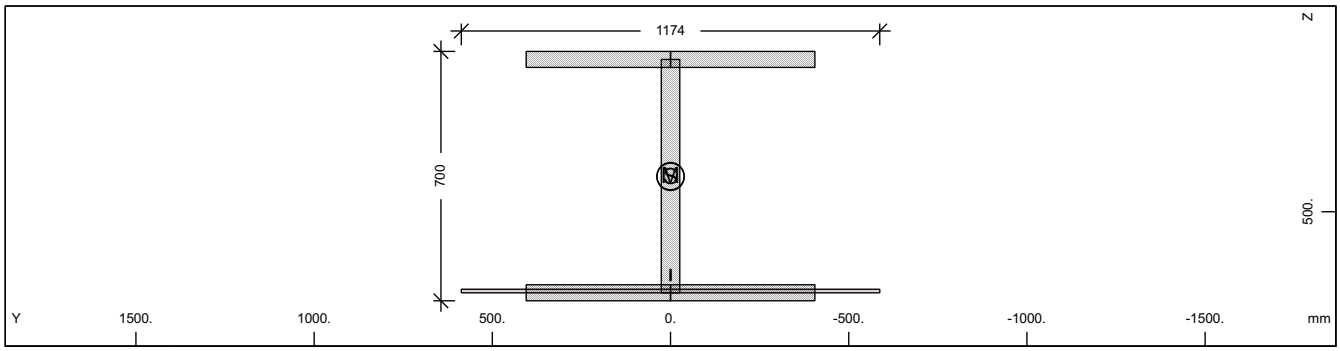

Cross section No. 453

Static properties of cross section

Mat NoR	A[cm2] It[cm4]	Ay/Az/Ayz [cm2]	Iy/Iz/Iyz [cm4]	ys/zs [mm]	modules [N/mm2]	gam [kN/m]
1	1076.18	607.50	910303.2	0.0	210000	8.69
	6270.0	288.72	398580.9	401.9	80769	

Additional static properties of cross section

Alfa-T [1/°K]	ymin ymax [mm]	zmin zmax [mm]	hymin hzmin [mm]	AK AB [cm2]	MB	Tau-T Tau-B [1/m3]	Tau-Vy Tau-Vz [1/m2]
1.2E-05	-587.0	-351.9		9.934E+01		1.715E+02	2.058E+01
	587.0	348.1		1.174E+02		1.189E+02	3.133E+01

Section values for warping

Wmin[cm2]	Wmax[cm2]	CM[cm6]	CMS[cm4]	ASwyy[cm6]	ASwzz[cm6]	ry[mm]	rz[mm]
-1326.38	1326.38	427502820.	651581.7	-1.15	-2.63	0.0	-0.5

Partial cross sections

Mat NoR	A[cm2] It[cm4]	Ay/Az/Ayz [cm2]	Iy/Iz/Iyz [cm4]	ys/zs [mm]	modules [N/mm2]	gam [kN/m]
1	1069.60	607.50	903669.7	0.0	210000	8.40
	7990.7	288.72	398580.9	400.0	80769	
25	117.40		9.8	0.0	10667	0.29
	539368.1	0.00	0.0	722.5	4444	
210	0.64	0.00	0.0	0.0	200000	0.00
	2.2	0.00	0.0	677.5	76923	

Design values of cross section

Mat NoR	A[cm2] It[cm4]	Ay/Az/Ayz [cm2]	Iy/Iz/Iyz [cm4]	ys/zs [mm]	modules [N/mm2]	gam [kN/m]
1	1074.78	607.50	908871.5	0.0	182609	8.69
	6270.0	288.72	398580.9	401.5	70234	

Design forces and moments
(C/E = characteristic plastic/elastic, D=plast.Design, F=elast. Design)

	N[kN]	Vy[kN]	Vz[kN]	Mt[kNm]	My[kNm]	Mz[kNm]	y[mm]	z[mm]	BUCK
C	35863.8	14118.33	7243.22	609.92	9999.89	5145.57	0.3	398.7	c c
C	-115.5				9998.92	0.00	0.0	401.9	COMB
C	-176.1				0.00	5145.63	0.0	0.0	COMB
C	-36216.0	14118.33	7243.22	609.92	-9887.60	-5145.48	-0.3	408.7	
C	-236.7				-9886.02	0.00	0.0	401.9	COMB
C	-176.1				0.00	-5145.63	0.0	0.0	COMB
E	36051.9	9399.84	6173.45	96.22	8664.75	3296.90	0.0	401.9	
E	-36051.9	9399.84	6173.45	96.22	-8664.75	-3296.90	0.0	401.9	
D	31185.9	12276.81	6259.15	507.29	8670.18	4463.89	0.2	399.2	
D	-84.3				8669.65	0.00	0.0	401.9	COMB
D	-117.4				0.00	4463.97	0.0	0.0	COMB
D	-31420.7	12276.81	6259.15	507.29	-8595.17	-4463.85	-0.2	406.9	
D	-150.5				-8594.38	0.00	0.0	401.9	COMB
D	-117.4				0.00	-4463.97	0.0	0.0	COMB

SOFiSTiK AG - www.sofistik.de

Composite bridge 38+50+38, b=14.25m, 2x2HL1100R HISTAR460 , slab 0.30m C30/37

Design forces and moments
(C/E = characteristic plastic/elastic, D=plast.Design, F=elast. Design)

	N[kN]	Vy[kN]	Vz[kN]	Mt[kNm]	My[kNm]	Mz[kNm]	y[mm]	z[mm]	BUCK
F	31349.5	8173.78	5368.22	64.15	7534.57	2866.87	0.0	401.9	
F	-31349.5	8173.78	5368.22	64.15	-7534.57	-2866.87	0.0	401.9	

Additional Design Data

M	periphery-O/-I [m2/m]	[m2/m]	deff [mm]	t-min [mm]	t-max [mm]	SMP [o/o]	thet-p [tm2/m]	thet-y [tm2/m]	thet-z [tm2/m]	thet-yz [tm2/m]
	4.574		47.1	32.0	52.0	0.0	0.105	0.074	0.031	
1	4.550		47.0	45.0	52.0	0.0	0.102	0.071	0.031	
25	0.020		1174.0			0.0	0.000	0.000		
**	0.004		32.0			0.0	0.000		0.000	

Cross section No. 453.5 = CS 30 - in-situ conc:C3

Cross section No. 551 - VFT

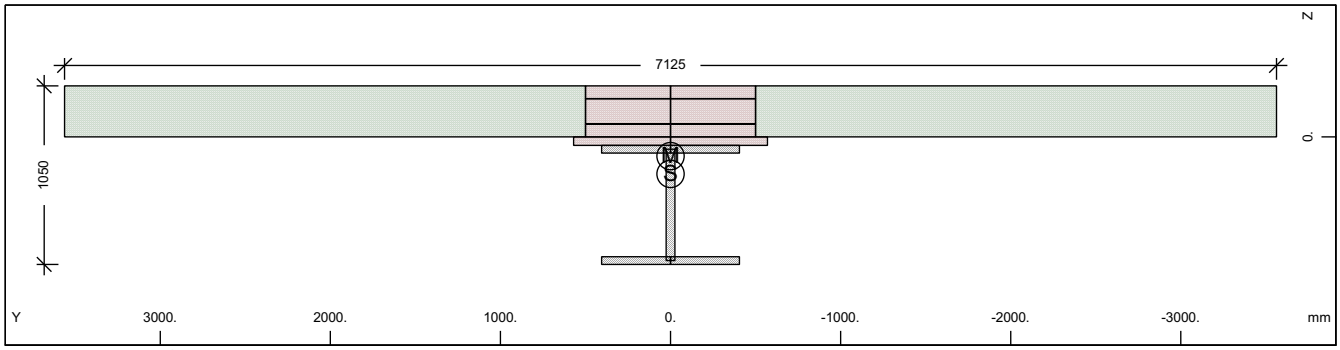

Cross section No. 551 - VFT

Static properties of cross section

Mat NoR	A[cm2] It[cm4]	Ay/Az/Ayz [cm2]	Iy/Iz/Iyz [cm4]	ys/zs [mm]	y/z-sc [mm]	modules [N/mm2]	gam [kN/m]
1	1642.18	1074.80	1946674.3	0.0	0.0	210000	63.26
	6270.0	462.67	897984.0	217.7	112.9	80769	

Additional static properties of cross section

Alfa-T [1/°K]	ymin ymax [mm]	zmin zmax [mm]	hymin hzmin [mm]	AK AB [cm2]	MB	Tau-T Tau-B [1/m3]	Tau-Vy Tau-Vz [1/m2]
1.2E-05	-3562.5	-517.7		2.115E+03		3.225E+01	1.326E+01
	3562.5	532.3		2.195E+04		1.189E+02	2.503E+01

Section values for warping

Wmin[cm2]	Wmax[cm2]	CM[cm6]	CMS[cm4]	ASwyy[cm6]	ASwzz[cm6]	ry[mm]	rz[mm]
-9367.06	9367.061042624125.		1423880.6	2.35	5.10	0.0	321.1

Partial cross sections

Mat NoR	A[cm2] It[cm4]	Ay/Az/Ayz [cm2]	Iy/Iz/Iyz [cm4]	ys/zs [mm]	modules [N/mm2]	gam [kN/m]
1	1069.60	374.63	903669.7	0.0	210000	8.40
	7990.7	428.98	398580.9	400.0	80769	
30	3570.00	4030.92	146691.2	0.0	32837	8.93
	904750.1	193.18	3117310.1	-122.1	13682	
31	18375.00	41481168.	0.0	0.0	0	45.94
	5512501.0	37388.97901762872.		-150.0	0	
300	15.07	17.99	847.8	0.0	200000	0.00
	0.0	1.01	12560.0	-150.0	76923	

SOFiSTiK AG - www.sofistik.de

Composite bridge 38+50+38, b=14.25m, 2x2HL1100R HISTAR460 , slab 0.30m C30/37

Design values of cross section

Mat NoR	A[cm2] It[cm4]	Ay/Az/Ayz [cm2]	Iy/Iz/Iyz [cm4]	ys/zs [mm]	modules [N/mm2]	gam [kN/m]
1	1511.92	915.42	1777982.7	0.0	182609	63.26
	6270.0	455.03	784247.7	247.0	70234	

Design forces and moments
(C/E = characteristic plastic/elastic, D=plast.Design, F=elast. Design)

	N[kN]	Vy[kN]	Vz[kN]	Mt[kNm]	My[kNm]	Mz[kNm]	y[mm]	z[mm]	BUCK
C	36585.2	50744.10	35388.07	99055.71	22135.36	59290.14	297.4	-132.	c d
C	-60238.3				34632.55	0.00	0.0	217.7	COMB
C	-32917.5				0.00	62637.10	0.0	0.0	COMB
C	-102420.	50744.10	35388.07	99055.72	-10272.8	-59290.1	-297.	378.2	
C	-5596.7				-10722.3	0.00	0.0	217.7	COMB
C	-32917.5				0.00	-62637.1	0.0	0.0	COMB
E	55012.9	5833.03	7727.07	523.56	7213.94	3022.57	0.0	217.7	
E	-31506.7	5833.03	7727.07	523.56	-12252.0	-3022.57	0.0	217.7	
D	31813.2	36778.50	25464.89	66149.80	18453.32	41510.95	197.9	-81.3	
D	-39023.3				25263.91	0.00	0.0	217.7	COMB
D	-21945.0				0.00	42829.79	0.0	0.0	COMB
D	-75703.2	36778.50	25464.89	66149.80	-8932.85	-41511.0	-198.	378.3	
D	-4866.7				-9323.74	0.00	0.0	217.7	COMB
D	-21945.0				0.00	-42829.8	0.0	0.0	COMB
F	47837.3	3888.69	6719.19	349.04	4809.30	2015.05	0.0	217.7	
F	-21004.4	3888.69	6719.19	349.04	-10653.9	-2015.05	0.0	217.7	

Additional Design Data

M	periphery-O/-I [m2/m]	[m2/m]	deff [mm]	t-min [mm]	t-max [mm]	SMP [o/o]	thet-p [tm2/m]	thet-y [tm2/m]	thet-z [tm2/m]	thet-yz [tm2/m]
	25.080		13.1	0.8	300.0	0.0	22.945	0.292	22.653	
1	4.550		47.0	45.0	52.0	0.0	0.102	0.071	0.031	
30	4.280		600.0	50.0	300.0	0.0	0.082	0.004	0.078	
31	12.250		300.0	300.0	300.0	0.0	22.544		22.544	
**	4.000		0.8	0.8	0.8	0.0	0.000	0.000	0.000	

Cross section No. 551.1 = CS 1 - steel alone

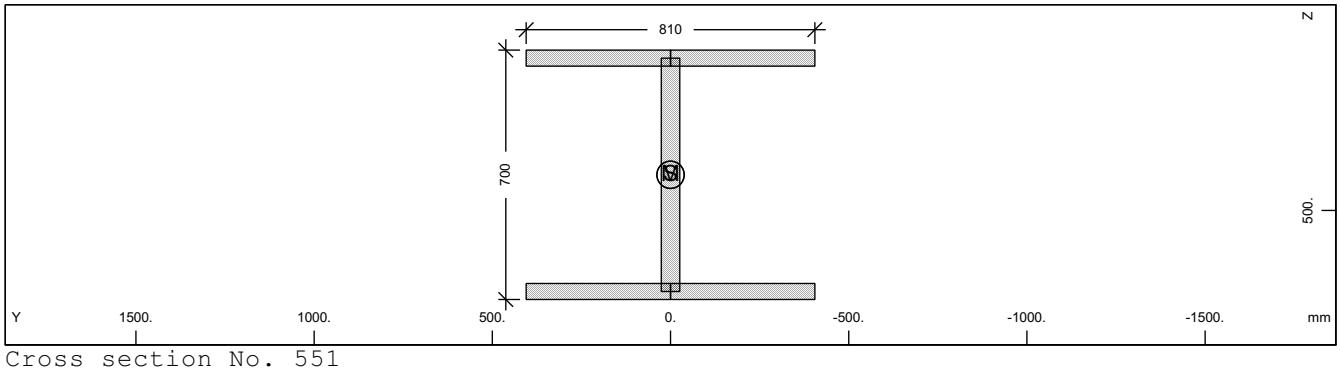

Cross section No. 551

Static properties of cross section

Mat NoR	A[cm2] It[cm4]	Ay/Az/Ayz [cm2]	Iy/Iz/Iyz [cm4]	ys/zs [mm]	modules [N/mm2]	gam [kN/m]
1	1069.60	607.50	903669.7	0.0	210000	8.40
	6270.0	288.17	398580.9	400.0	80769	

Additional static properties of cross section

Alfa-T [1/°K]	ymin ymax [mm]	zmin zmax [mm]	hymin hzmin [mm]	AK AB [cm2]	MB	Tau-T Tau-B [1/m3]	Tau-Vy Tau-Vz [1/m2]
1.2E-05	-405.0	-350.0		5.910E+02		6.508E+02	2.058E+01
	405.0	350.0				1.189E+02	3.134E+01

SOFiSTiK AG - www.sofistik.de

Composite bridge 38+50+38, b=14.25m, 2x2HL1100R HISTAR460 , slab 0.30m C30/37

Section values for warping

Wmin[cm2]	Wmax[cm2]	CM[cm6]	CMS[cm4]	ASwyy[cm6]	ASwzz[cm6]	ry[mm]	rz[mm]
-1326.38	1326.38	427502762.	651581.6	-3.01	-6.82	0.0	0.0

Design values of cross section

Mat NoR	A[cm2] It[cm4]	Ay/Az/Ayz [cm2]	Iy/Iz/Iyz [cm4]	ys/zs [mm]	modules [N/mm2]	gam [kN/m]
1	1069.60	607.50	903669.7	0.0	182609	8.40
	6270.0	288.17	398580.9	400.0	70234	

Design forces and moments
(C/E = characteristic plastic/elastic, D=plast.Design, F=elast. Design)

	N[kN]	Vy[kN]	Vz[kN]	Mt[kNm]	My[kNm]	Mz[kNm]	y[mm]	z[mm]	BUCK
C	35831.6	14099.76	6587.62	488.52	9866.45	5093.69	0.0	400.0	c d
C	0.0				0.00	0.00	0.0	0.0	COMB
E	35831.6	9399.84	6171.79	297.21	8649.41	3296.90	0.0	400.0	
D	31157.9	12260.66	5728.37	424.80	8579.52	4429.29	0.0	400.0	
D	0.0				0.00	0.00	0.0	0.0	COMB
F	31157.9	8173.78	5366.77	258.44	7521.22	2866.87	0.0	400.0	

Additional Design Data

M	periphery-O/-I [m2/m]	[m2/m]	deff [mm]	t-min [mm]	t-max [mm]	SMP [o/o]	thet-p [tm2/m]	thet-y [tm2/m]	thet-z [tm2/m]	thet-yz [tm2/m]
	4.550		47.0	45.0	52.0	0.0	0.102	0.071	0.031	

Cross section No. 551.2 = CS 10 - prefab. slab C1

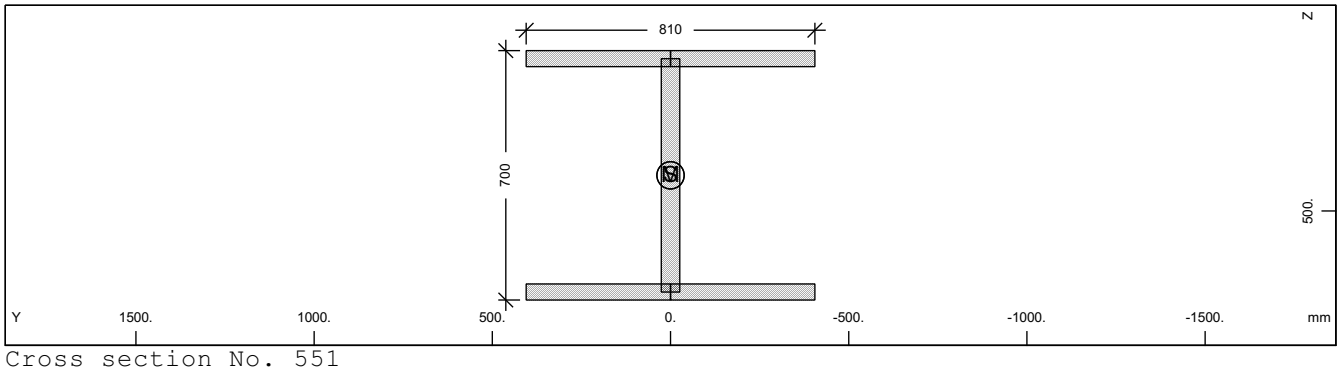

Cross section No. 551

Static properties of cross section

Mat NoR	A[cm2] It[cm4]	Ay/Az/Ayz [cm2]	Iy/Iz/Iyz [cm4]	ys/zs [mm]	modules [N/mm2]	gam [kN/m]
1	1069.60	607.50	903669.7	0.0	210000	8.40
	6270.0	288.17	398580.9	400.0	80769	

Additional static properties of cross section

Alfa-T [1/°K]	ymin ymax [mm]	zmin zmax [mm]	hymin hzmin [mm]	AK AB [cm2]	MB	Tau-T Tau-B [1/m3]	Tau-Vy Tau-Vz [1/m2]
1.2E-05	-405.0	-350.0		5.910E+02		6.508E+02	2.058E+01
	405.0	350.0				1.189E+02	3.134E+01

Section values for warping

Wmin[cm2]	Wmax[cm2]	CM[cm6]	CMS[cm4]	ASwyy[cm6]	ASwzz[cm6]	ry[mm]	rz[mm]
-1326.38	1326.38	427502762.	651581.6	-3.01	-6.82	0.0	0.0

Design values of cross section

Mat NoR	A[cm2] It[cm4]	Ay/Az/Ayz [cm2]	Iy/Iz/Iyz [cm4]	ys/zs [mm]	modules [N/mm2]	gam [kN/m]
1	1069.60	607.50	903669.7	0.0	182609	8.40
	6270.0	288.17	398580.9	400.0	70234	

SOFiSTiK AG - www.sofistik.de

Composite bridge 38+50+38, b=14.25m, 2x2HL1100R HISTAR460 , slab 0.30m C30/37

Design forces and moments
(C/E = characteristic plastic/elastic, D=plast.Design, F=elast. Design)

	N[kN]	Vy[kN]	Vz[kN]	Mt[kNm]	My[kNm]	Mz[kNm]	y[mm]	z[mm]	BUCK
C	35831.6	14099.76	6587.62	488.52	9866.45	5093.69	0.0	400.0	c d
C	0.0				0.00	0.00	0.0	0.0	COMB
E	35831.6	9399.84	6171.79	297.21	8649.41	3296.90	0.0	400.0	
D	31157.9	12260.66	5728.37	424.80	8579.52	4429.29	0.0	400.0	
D	0.0				0.00	0.00	0.0	0.0	COMB
F	31157.9	8173.78	5366.77	258.44	7521.22	2866.87	0.0	400.0	

Additional Design Data

M	periphery-O/-I [m2/m]	[m2/m]	deff [mm]	t-min [mm]	t-max [mm]	SMP [o/o]	thet-p [tm2/m]	thet-y [tm2/m]	thet-z [tm2/m]	thet-yz [tm2/m]
	4.550		47.0	45.0	52.0	0.0	0.102	0.071	0.031	

Cross section No. 551.3 = CS 20 - in-situ conc:C2

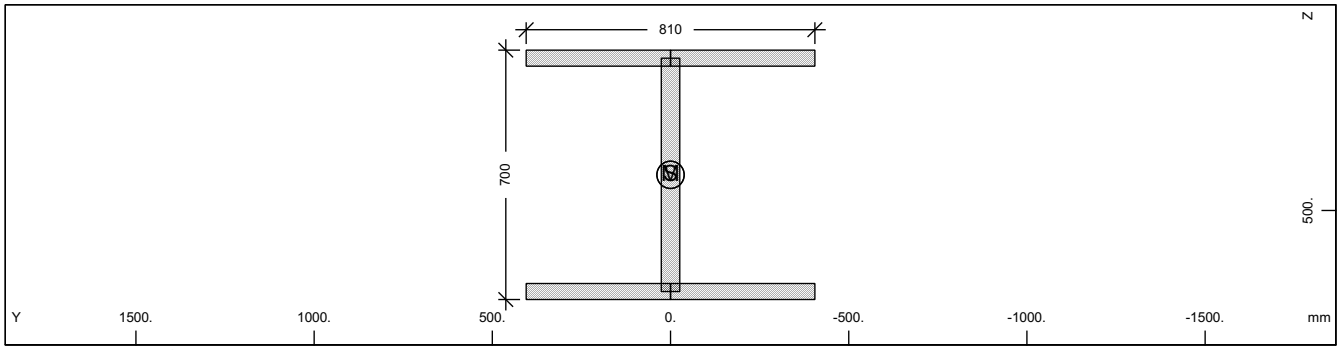

Cross section No. 551

Static properties of cross section

Mat NoR	A[cm2] It[cm4]	Ay/Az/Ayz [cm2]	Iy/Iz/Iyz [cm4]	ys/zs [mm]	modules [N/mm2]	gam [kN/m]
1	1069.60	607.50	903669.7	0.0	210000	8.40
	6270.0	288.17	398580.9	400.0	80769	

Additional static properties of cross section

Alfa-T [1/°K]	ymin ymax [mm]	zmin zmax [mm]	hymin hzmin [mm]	AK AB [cm2]	MB	Tau-T Tau-B [1/m3]	Tau-Vy Tau-Vz [1/m2]
1.2E-05	-405.0	-350.0		5.910E+02		6.508E+02	2.058E+01
	405.0	350.0				1.189E+02	3.134E+01

Section values for warping

Wmin[cm2]	Wmax[cm2]	CM[cm6]	CMS[cm4]	ASwyy[cm6]	ASwzz[cm6]	ry[mm]	rz[mm]
-1326.38	1326.38	427502762.	651581.6	-3.01	-6.82	0.0	0.0

Design values of cross section

Mat NoR	A[cm2] It[cm4]	Ay/Az/Ayz [cm2]	Iy/Iz/Iyz [cm4]	ys/zs [mm]	modules [N/mm2]	gam [kN/m]
1	1069.60	607.50	903669.7	0.0	182609	8.40
	6270.0	288.17	398580.9	400.0	70234	

Design forces and moments
(C/E = characteristic plastic/elastic, D=plast.Design, F=elast. Design)

	N[kN]	Vy[kN]	Vz[kN]	Mt[kNm]	My[kNm]	Mz[kNm]	y[mm]	z[mm]	BUCK
C	35831.6	14099.76	6587.62	488.52	9866.45	5093.69	0.0	400.0	c d
C	0.0				0.00	0.00	0.0	0.0	COMB
E	35831.6	9399.84	6171.79	297.21	8649.41	3296.90	0.0	400.0	
D	31157.9	12260.66	5728.37	424.80	8579.52	4429.29	0.0	400.0	
D	0.0				0.00	0.00	0.0	0.0	COMB
F	31157.9	8173.78	5366.77	258.44	7521.22	2866.87	0.0	400.0	

SOFiSTiK AG - www.sofistik.de

Composite bridge 38+50+38, b=14.25m, 2x2HL1100R HISTAR460 , slab 0.30m C30/37

Additional Design Data

M	periphery-O/-I [m2/m]	[m2/m]	deff [mm]	t-min [mm]	t-max [mm]	SMP [o/o]	thet-p [tm2/m]	thet-y [tm2/m]	thet-z [tm2/m]	thet-yz [tm2/m]
	4.550		47.0	45.0	52.0	0.0	0.102	0.071	0.031	

Cross section No. 551.4 = CS 21 - reinf active:C2

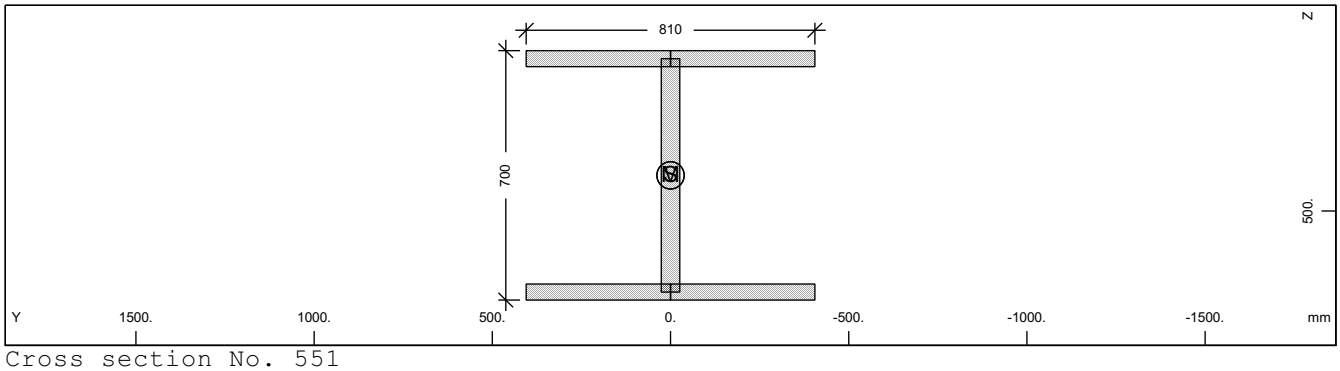

Cross section No. 551

Static properties of cross section

Mat NoR	A[cm2] It[cm4]	Ay/Az/Ayz [cm2]	Iy/Iz/Iyz [cm4]	ys/zs [mm]	modules [N/mm2]	gam [kN/m]
1	1069.60	607.50	903669.7	0.0	210000	8.40
	6270.0	288.17	398580.9	400.0	80769	

Additional static properties of cross section

Alfa-T [1/°K]	ymin ymax [mm]	zmin zmax [mm]	hymin hzmin [mm]	AK AB [cm2]	MB	Tau-T Tau-B [1/m3]	Tau-Vy Tau-Vz [1/m2]
1.2E-05	-405.0	-350.0		5.910E+02		6.508E+02	2.058E+01
	405.0	350.0				1.189E+02	3.134E+01

Section values for warping

Wmin[cm2]	Wmax[cm2]	CM[cm6]	CMS[cm4]	ASwyy[cm6]	ASwzz[cm6]	ry[mm]	rz[mm]
-1326.38	1326.38	427502762.	651581.6	-3.01	-6.82	0.0	0.0

Design values of cross section

Mat NoR	A[cm2] It[cm4]	Ay/Az/Ayz [cm2]	Iy/Iz/Iyz [cm4]	ys/zs [mm]	modules [N/mm2]	gam [kN/m]
1	1069.60	607.50	903669.7	0.0	182609	8.40
	6270.0	288.17	398580.9	400.0	70234	

Design forces and moments
(C/E = characteristic plastic/elastic, D=plast.Design, F=elast. Design)

	N[kN]	Vy[kN]	Vz[kN]	Mt[kNm]	My[kNm]	Mz[kNm]	y[mm]	z[mm]	BUCK
C	35831.6	14099.76	6587.62	488.52	9866.45	5093.69	0.0	400.0	c d
C	0.0				0.00	0.00	0.0	0.0	COMB
E	35831.6	9399.84	6171.79	297.21	8649.41	3296.90	0.0	400.0	
D	31157.9	12260.66	5728.37	424.80	8579.52	4429.29	0.0	400.0	
D	0.0				0.00	0.00	0.0	0.0	COMB
F	31157.9	8173.78	5366.77	258.44	7521.22	2866.87	0.0	400.0	

Additional Design Data

M	periphery-O/-I [m2/m]	[m2/m]	deff [mm]	t-min [mm]	t-max [mm]	SMP [o/o]	thet-p [tm2/m]	thet-y [tm2/m]	thet-z [tm2/m]	thet-yz [tm2/m]
	4.550		47.0	45.0	52.0	0.0	0.102	0.071	0.031	

SOFiSTiK AG - www.sofistik.de

Composite bridge 38+50+38, b=14.25m, 2x2HL1100R HISTAR460 , slab 0.30m C30/37

Cross section No. 551.5 = CS 30 - in-situ conc:C3

Cross section No. 552 - VFT

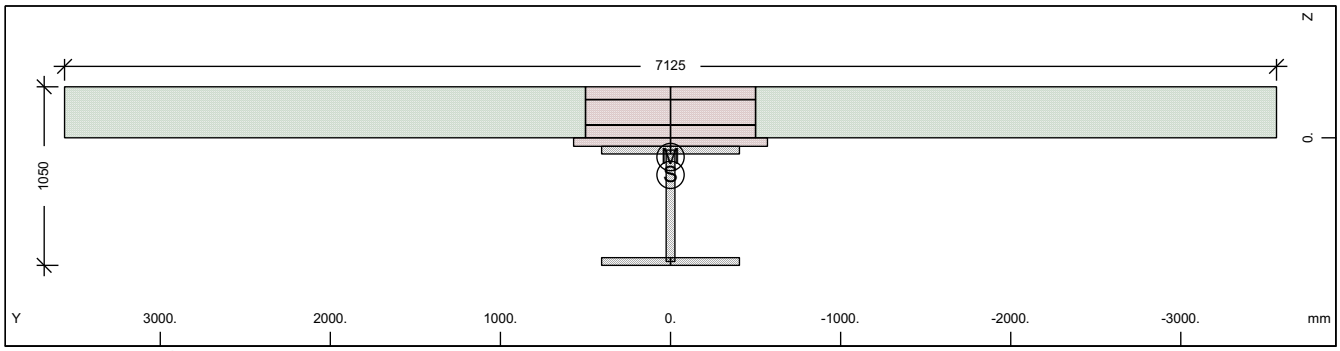

Cross section No. 552 - VFT

Static properties of cross section

Mat NoR	A[cm2] It[cm4]	Ay/Az/Ayz [cm2]	Iy/Iz/Iyz [cm4]	ys/zs [mm]	y/z-sc [mm]	modules [N/mm2]	gam [kN/m]
1	1642.18	1074.80	1946674.3	0.0	0.0	210000	63.26
	6270.0	462.67	897984.0	217.7	112.9	80769	

Additional static properties of cross section

Alfa-T [1/°K]	ymin ymax [mm]	zmin zmax [mm]	hymin hzmin [mm]	AK AB [cm2]	MB	Tau-T Tau-B [1/m3]	Tau-Vy Tau-Vz [1/m2]
1.2E-05	-3562.5	-517.7		2.115E+03		3.225E+01	1.326E+01
	3562.5	532.3		2.195E+04		1.189E+02	2.503E+01

Section values for warping

Wmin[cm2]	Wmax[cm2]	CM[cm6]	CMS[cm4]	ASwyy[cm6]	ASwzz[cm6]	ry[mm]	rz[mm]
-9367.06	9367.061	042624125.	1423880.6	2.35	5.10	0.0	321.1

Partial cross sections

Mat NoR	A[cm2] It[cm4]	Ay/Az/Ayz [cm2]	Iy/Iz/Iyz [cm4]	ys/zs [mm]	modules [N/mm2]	gam [kN/m]
1	1069.60	374.63	903669.7	0.0	210000	8.40
	7990.7	428.98	398580.9	400.0	80769	
30	3570.00	4030.92	146691.2	0.0	32837	8.93
	904750.1	193.18	3117310.1	-122.1	13682	
31	18375.00	41481168.	0.0	0.0	0	45.94
	5512501.0	37388.97901762872.		-150.0	0	
300	15.07	17.99	847.8	0.0	200000	0.00
	0.0	1.01	12560.0	-150.0	76923	

Design values of cross section

Mat NoR	A[cm2] It[cm4]	Ay/Az/Ayz [cm2]	Iy/Iz/Iyz [cm4]	ys/zs [mm]	modules [N/mm2]	gam [kN/m]
1	1511.92	915.42	1777982.7	0.0	182609	63.26
	6270.0	455.03	784247.7	247.0	70234	

Design forces and moments
(C/E = characteristic plastic/elastic, D=plast.Design, F=elast. Design)

	N[kN]	Vy[kN]	Vz[kN]	Mt[kNm]	My[kNm]	Mz[kNm]	y[mm]	z[mm]	BUCK
C	36585.2	50744.10	35388.07	99055.71	22135.36	59290.14	297.4	-132.	c c
C	-60238.3				34632.55	0.00	0.0	217.7	COMB
C	-32917.5				0.00	62637.10	0.0	0.0	COMB
C	-102420.	50744.10	35388.07	99055.72	-10272.8	-59290.1	-297.	378.2	
C	-5596.7				-10722.3	0.00	0.0	217.7	COMB
C	-32917.5				0.00	-62637.1	0.0	0.0	COMB
E	55012.9	5833.03	7727.07	523.56	7213.94	3022.57	0.0	217.7	
E	-31506.7	5833.03	7727.07	523.56	-12252.0	-3022.57	0.0	217.7	
D	31813.2	36778.50	25464.89	66149.80	18453.32	41510.95	197.9	-81.3	

SOFiSTiK AG - www.sofistik.de

Composite bridge 38+50+38, b=14.25m, 2x2HL1100R HISTAR460 , slab 0.30m C30/37

Design forces and moments
(C/E = characteristic plastic/elastic, D=plast.Design, F=elast. Design)

	N[kN]	Vy[kN]	Vz[kN]	Mt[kNm]	My[kNm]	Mz[kNm]	y[mm]	z[mm]	BUCK
D	-39023.3				25263.91	0.00	0.0	217.7	COMB
D	-21945.0				0.00	42829.79	0.0	0.0	COMB
D	-75703.2	36778.50	25464.89	66149.80	-8932.85	-41511.0	-198.	378.3	
D	-4866.7				-9323.74	0.00	0.0	217.7	COMB
D	-21945.0				0.00	-42829.8	0.0	0.0	COMB
F	47837.3	3888.69	6719.19	349.04	4809.30	2015.05	0.0	217.7	
F	-21004.4	3888.69	6719.19	349.04	-10653.9	-2015.05	0.0	217.7	

Additional Design Data

M	periphery-O/-I [m2/m]	[m2/m]	deff [mm]	t-min [mm]	t-max [mm]	SMP [o/o]	thet-p [tm2/m]	thet-y [tm2/m]	thet-z [tm2/m]	thet-yz [tm2/m]
	25.080		13.1	0.8	300.0	0.0	22.945	0.292	22.653	
1	4.550		47.0	45.0	52.0	0.0	0.102	0.071	0.031	
30	4.280		600.0	50.0	300.0	0.0	0.082	0.004	0.078	
31	12.250		300.0	300.0	300.0	0.0	22.544		22.544	
**	4.000		0.8	0.8	0.8	0.0	0.000	0.000	0.000	

Cross section No. 552.1 = CS 1 - steel alone

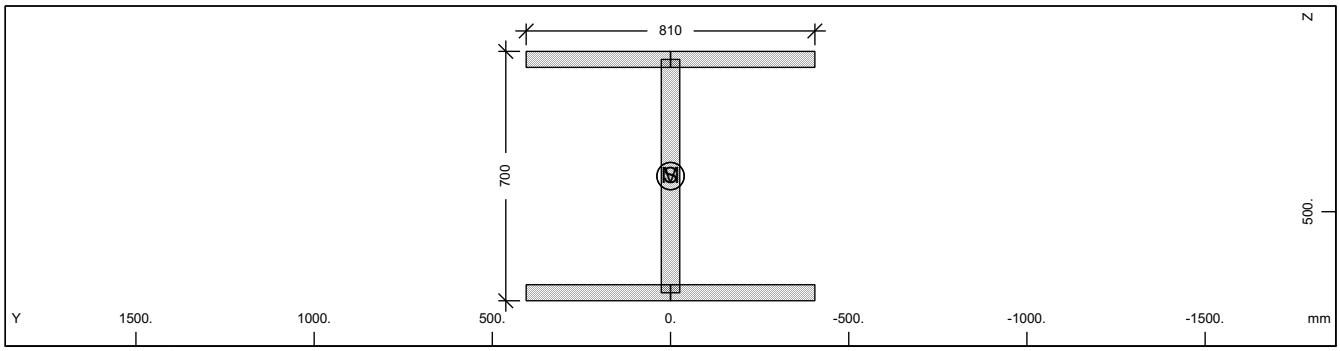

Cross section No. 552

Static properties of cross section

Mat NoR	A[cm2] It[cm4]	Ay/Az/Ayz [cm2]	Iy/Iz/Iyz [cm4]	ys/zs [mm]	modules [N/mm2]	gam [kN/m]
1	1069.60	607.50	903669.7	0.0	210000	8.40
	6270.0	288.17	398580.9	400.0	80769	

Additional static properties of cross section

Alfa-T [1/°K]	ymin ymax [mm]	zmin zmax [mm]	hymin hzmin [mm]	AK AB [cm2]	MB	Tau-T Tau-B [1/m3]	Tau-Vy Tau-Vz [1/m2]
1.2E-05	-405.0	-350.0		5.910E+02		6.508E+02	2.058E+01
	405.0	350.0				1.189E+02	3.134E+01

Section values for warping

Wmin[cm2]	Wmax[cm2]	CM[cm6]	CMS[cm4]	ASwyy[cm6]	ASwzz[cm6]	ry[mm]	rz[mm]
-1326.38	1326.38	427502762.	651581.6	-3.01	-6.82	0.0	0.0

Design values of cross section

Mat NoR	A[cm2] It[cm4]	Ay/Az/Ayz [cm2]	Iy/Iz/Iyz [cm4]	ys/zs [mm]	modules [N/mm2]	gam [kN/m]
1	1069.60	607.50	903669.7	0.0	182609	8.40
	6270.0	288.17	398580.9	400.0	70234	

Design forces and moments
(C/E = characteristic plastic/elastic, D=plast.Design, F=elast. Design)

	N[kN]	Vy[kN]	Vz[kN]	Mt[kNm]	My[kNm]	Mz[kNm]	y[mm]	z[mm]	BUCK
C	35831.6	14099.76	6587.62	488.52	9866.45	5093.69	0.0	400.0	c d
C	0.0				0.00	0.00	0.0	0.0	COMB
E	35831.6	9399.84	6171.79	297.21	8649.41	3296.90	0.0	400.0	
D	31157.9	12260.66	5728.37	424.80	8579.52	4429.29	0.0	400.0	

SOFiSTiK AG - www.sofistik.de

Composite bridge 38+50+38, b=14.25m, 2x2HL1100R HISTAR460 , slab 0.30m C30/37

Design forces and moments
(C/E = characteristic plastic/elastic, D=plast.Design, F=elast. Design)

	N[kN]	Vy[kN]	Vz[kN]	Mt[kNm]	My[kNm]	Mz[kNm]	y[mm]	z[mm]	BUCK
D	0.0				0.00	0.00	0.0	0.0	COMB
F	31157.9	8173.78	5366.77	258.44	7521.22	2866.87	0.0	400.0	

Additional Design Data

M	periphery-O/-I [m2/m]	[m2/m]	deff [mm]	t-min [mm]	t-max [mm]	SMP [o/o]	thet-p [tm2/m]	thet-y [tm2/m]	thet-z [tm2/m]	thet-yz [tm2/m]
	4.550		47.0	45.0	52.0	0.0	0.102	0.071	0.031	

Cross section No. 552.2 = CS 10 - prefab. slab C1

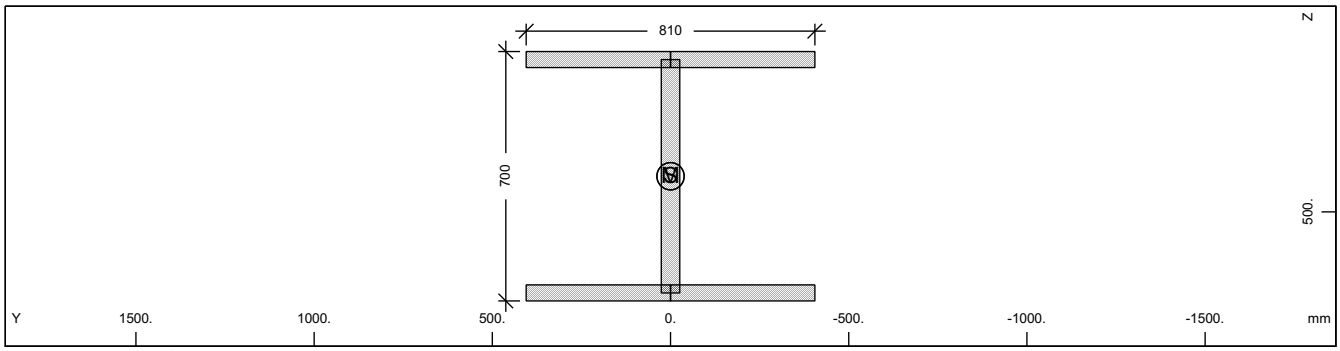

Cross section No. 552

Static properties of cross section

Mat NoR	A[cm2] It[cm4]	Ay/Az/Ayz [cm2]	Iy/Iz/Iyz [cm4]	ys/zs [mm]	modules [N/mm2]	gam [kN/m]
1	1069.60	607.50	903669.7	0.0	210000	8.40
	6270.0	288.17	398580.9	400.0	80769	

Additional static properties of cross section

Alfa-T [1/°K]	ymin ymax [mm]	zmin zmax [mm]	hymin hzmin [mm]	AK AB [cm2]	MB	Tau-T Tau-B [1/m3]	Tau-Vy Tau-Vz [1/m2]
1.2E-05	-405.0	-350.0		5.910E+02		6.508E+02	2.058E+01
	405.0	350.0				1.189E+02	3.134E+01

Section values for warping

Wmin[cm2]	Wmax[cm2]	CM[cm6]	CMS[cm4]	ASwyy[cm6]	ASwzz[cm6]	ry[mm]	rz[mm]
-1326.38	1326.38	427502762.	651581.6	-3.01	-6.82	0.0	0.0

Design values of cross section

Mat NoR	A[cm2] It[cm4]	Ay/Az/Ayz [cm2]	Iy/Iz/Iyz [cm4]	ys/zs [mm]	modules [N/mm2]	gam [kN/m]
1	1069.60	607.50	903669.7	0.0	182609	8.40
	6270.0	288.17	398580.9	400.0	70234	

Design forces and moments
(C/E = characteristic plastic/elastic, D=plast.Design, F=elast. Design)

	N[kN]	Vy[kN]	Vz[kN]	Mt[kNm]	My[kNm]	Mz[kNm]	y[mm]	z[mm]	BUCK
C	35831.6	14099.76	6587.62	488.52	9866.45	5093.69	0.0	400.0	c d
C	0.0				0.00	0.00	0.0	0.0	COMB
E	35831.6	9399.84	6171.79	297.21	8649.41	3296.90	0.0	400.0	
D	31157.9	12260.66	5728.37	424.80	8579.52	4429.29	0.0	400.0	
D	0.0				0.00	0.00	0.0	0.0	COMB
F	31157.9	8173.78	5366.77	258.44	7521.22	2866.87	0.0	400.0	

Additional Design Data

M	periphery-O/-I [m2/m]	[m2/m]	deff [mm]	t-min [mm]	t-max [mm]	SMP [o/o]	thet-p [tm2/m]	thet-y [tm2/m]	thet-z [tm2/m]	thet-yz [tm2/m]
	4.550		47.0	45.0	52.0	0.0	0.102	0.071	0.031	

SOFiSTiK AG - www.sofistik.de

Composite bridge 38+50+38, b=14.25m, 2x2HL1100R HISTAR460 , slab 0.30m C30/37

Cross section No. 552.3 = CS 20 - in-situ conc:C2

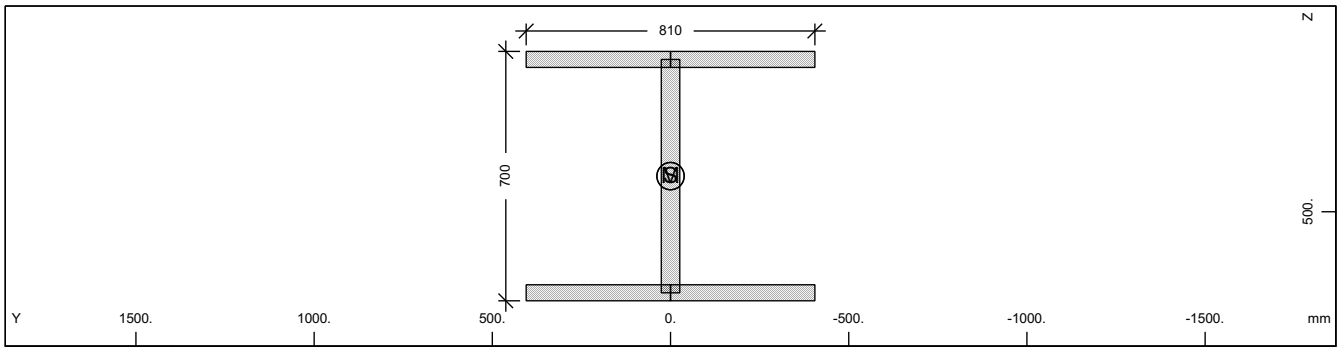

Cross section No. 552

Static properties of cross section

Mat NoR	A[cm2] It[cm4]	Ay/Az/Ayz [cm2]	Iy/Iz/Iyz [cm4]	ys/zs [mm]	modules [N/mm2]	gam [kN/m]
1	1069.60	607.50	903669.7	0.0	210000	8.40
	6270.0	288.17	398580.9	400.0	80769	

Additional static properties of cross section

Alfa-T [1/°K]	ymin ymax [mm]	zmin zmax [mm]	hymin hzmin [mm]	AK AB [cm2]	MB	Tau-T Tau-B [1/m3]	Tau-Vy Tau-Vz [1/m2]
1.2E-05	-405.0	-350.0		5.910E+02		6.508E+02	2.058E+01
	405.0	350.0				1.189E+02	3.134E+01

Section values for warping

Wmin[cm2]	Wmax[cm2]	CM[cm6]	CMS[cm4]	ASwyy[cm6]	ASwzz[cm6]	ry[mm]	rz[mm]
-1326.38	1326.38	427502762.	651581.6	-3.01	-6.82	0.0	0.0

Design values of cross section

Mat NoR	A[cm2] It[cm4]	Ay/Az/Ayz [cm2]	Iy/Iz/Iyz [cm4]	ys/zs [mm]	modules [N/mm2]	gam [kN/m]
1	1069.60	607.50	903669.7	0.0	182609	8.40
	6270.0	288.17	398580.9	400.0	70234	

Design forces and moments
(C/E = characteristic plastic/elastic, D=plast.Design, F=elast. Design)

	N[kN]	Vy[kN]	Vz[kN]	Mt[kNm]	My[kNm]	Mz[kNm]	y[mm]	z[mm]	BUCK
C	35831.6	14099.76	6587.62	488.52	9866.45	5093.69	0.0	400.0	c d
C	0.0				0.00	0.00	0.0	0.0	COMB
E	35831.6	9399.84	6171.79	297.21	8649.41	3296.90	0.0	400.0	
D	31157.9	12260.66	5728.37	424.80	8579.52	4429.29	0.0	400.0	
D	0.0				0.00	0.00	0.0	0.0	COMB
F	31157.9	8173.78	5366.77	258.44	7521.22	2866.87	0.0	400.0	

Additional Design Data

M	periphery-O/-I [m2/m] [m2/m]	deff [mm]	t-min [mm]	t-max [mm]	SMP [o/o]	thet-p [tm2/m]	thet-y [tm2/m]	thet-z [tm2/m]	thet-yz [tm2/m]
	4.550	47.0	45.0	52.0	0.0	0.102	0.071	0.031	

SOFiSTiK AG - www.sofistik.de

Composite bridge 38+50+38, b=14.25m, 2x2HL1100R HISTAR460 , slab 0.30m C30/37

Cross section No. 552.4 = CS 21 - reinf active:C2

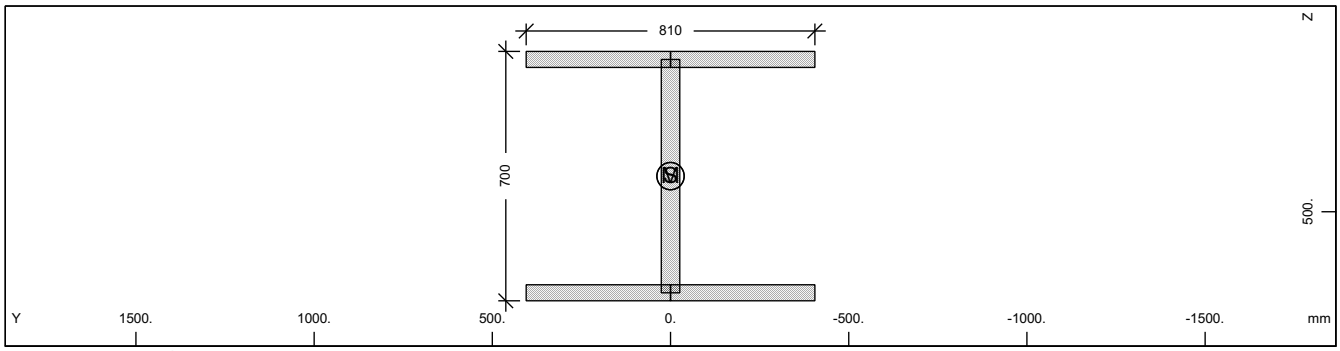

Cross section No. 552

Static properties of cross section

Mat NoR	A[cm2] It[cm4]	Ay/Az/Ayz [cm2]	Iy/Iz/Iyz [cm4]	ys/zs [mm]	modules [N/mm2]	gam [kN/m]
1	1069.60	607.50	903669.7	0.0	210000	8.40
	6270.0	288.17	398580.9	400.0	80769	

Additional static properties of cross section

Alfa-T [1/°K]	ymin ymax [mm]	zmin zmax [mm]	hymin hzmin [mm]	AK AB [cm2]	MB	Tau-T Tau-B [1/m3]	Tau-Vy Tau-Vz [1/m2]
1.2E-05	-405.0	-350.0		5.910E+02		6.508E+02	2.058E+01
	405.0	350.0				1.189E+02	3.134E+01

Section values for warping

Wmin[cm2]	Wmax[cm2]	CM[cm6]	CMS[cm4]	ASwyy[cm6]	ASwzz[cm6]	ry[mm]	rz[mm]
-1326.38	1326.38	427502762.	651581.6	-3.01	-6.82	0.0	0.0

Design values of cross section

Mat NoR	A[cm2] It[cm4]	Ay/Az/Ayz [cm2]	Iy/Iz/Iyz [cm4]	ys/zs [mm]	modules [N/mm2]	gam [kN/m]
1	1069.60	607.50	903669.7	0.0	182609	8.40
	6270.0	288.17	398580.9	400.0	70234	

Design forces and moments
(C/E = characteristic plastic/elastic, D=plast.Design, F=elast. Design)

	N[kN]	Vy[kN]	Vz[kN]	Mt[kNm]	My[kNm]	Mz[kNm]	y[mm]	z[mm]	BUCK
C	35831.6	14099.76	6587.62	488.52	9866.45	5093.69	0.0	400.0	c d
C	0.0				0.00	0.00	0.0	0.0	COMB
E	35831.6	9399.84	6171.79	297.21	8649.41	3296.90	0.0	400.0	
D	31157.9	12260.66	5728.37	424.80	8579.52	4429.29	0.0	400.0	
D	0.0				0.00	0.00	0.0	0.0	COMB
F	31157.9	8173.78	5366.77	258.44	7521.22	2866.87	0.0	400.0	

Additional Design Data

M	periphery-O/-I [m2/m] [m2/m]	deff [mm]	t-min [mm]	t-max [mm]	SMP [o/o]	thet-p [tm2/m]	thet-y [tm2/m]	thet-z [tm2/m]	thet-yz [tm2/m]
	4.550	47.0	45.0	52.0	0.0	0.102	0.071	0.031	

SOFiSTiK AG - www.sofistik.de

Composite bridge 38+50+38, b=14.25m, 2x2HL1100R HISTAR460 , slab 0.30m C30/37

Cross section No. 552.5 = CS 30 - in-situ conc:C3

Cross section No. 553 - VFT

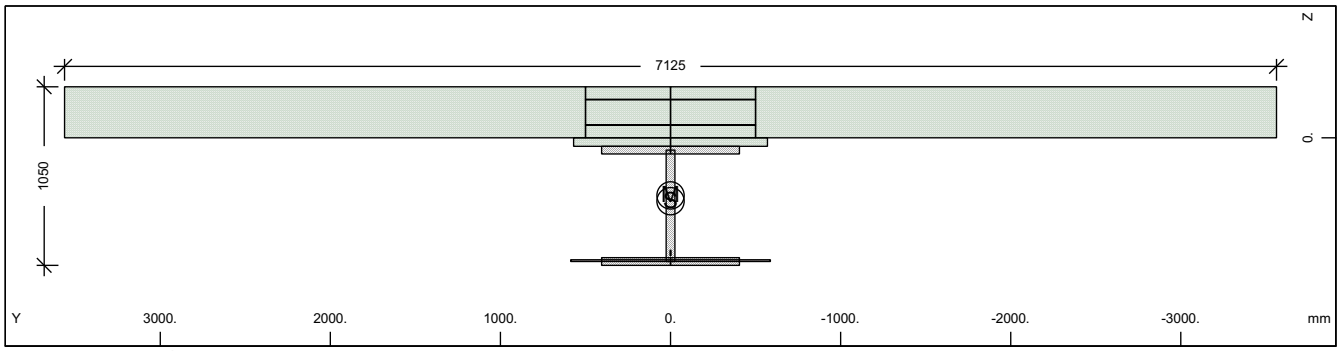

Cross section No. 553 - VFT

Static properties of cross section

Mat NoR	A[cm2] It[cm4]	Ay/Az/Ayz [cm2]	Iy/Iz/Iyz [cm4]	ys/zs [mm]	y/z-sc [mm]	modules [N/mm2]	gam [kN/m]
1	1135.99	645.43	1086280.2	0.0	0.0	210000	63.55
	6270.0	327.35	448426.4	372.9	338.9	80769	

Additional static properties of cross section

Alfa-T [1/°K]	ymin ymax [mm]	zmin zmax [mm]	hymin hzmin [mm]	AK AB [cm2]	MB	Tau-T Tau-B [1/m3]	Tau-Vy Tau-Vz [1/m2]
1.2E-05	-3562.5	-672.9		9.935E+01		1.715E+02	2.655E+01
	3562.5	377.1		2.206E+04		1.189E+02	2.907E+01

Section values for warping

Wmin[cm2]	Wmax[cm2]	CM[cm6]	CMS[cm4]	ASwyy[cm6]	ASwzz[cm6]	ry[mm]	rz[mm]
-17415.78	17415.78	564328746.	771743.0	0.60	1.46	0.0	40.8

Partial cross sections

Mat NoR	A[cm2] It[cm4]	Ay/Az/Ayz [cm2]	Iy/Iz/Iyz [cm4]	ys/zs [mm]	modules [N/mm2]	gam [kN/m]
1	1069.60	541.76	903669.7	0.0	210000	8.40
	7990.7	313.84	398580.9	400.0	80769	
25	117.40		9.8	0.0	10667	0.29
	539368.1	0.00	0.0	722.5	4444	
210	0.64	0.00	0.0	0.0	200000	0.00
	2.2	0.00	0.0	677.5	76923	
31	21945.00	81034377.	170028.4	0.0	0	54.86
	6417251.4	191356.89	904880243.	-145.5	0	
300	62.80	108.42	3532.5	0.0	200000	0.00
	2.1	14.01	52333.3	-150.0	76923	

Design values of cross section

Mat NoR	A[cm2] It[cm4]	Ay/Az/Ayz [cm2]	Iy/Iz/Iyz [cm4]	ys/zs [mm]	modules [N/mm2]	gam [kN/m]
1	1134.59	645.34	1084577.3	0.0	182609	63.55
	6270.0	327.18	448425.4	372.5	70234	

Design forces and moments
(C/E = characteristic plastic/elastic, D=plast.Design, F=elast. Design)

	N[kN]	Vy[kN]	Vz[kN]	Mt[kNm]	My[kNm]	Mz[kNm]	y[mm]	z[mm]	BUCK
C	39003.8	52140.45	36043.66	99179.80	22340.65	60206.52	279.8	-131.	c c
C	-68069.4				45787.38	0.00	0.0	372.9	COMB
C	-33093.6				0.00	63285.64	0.0	0.0	COMB
C	262309.1	52140.45	36043.66	99179.79	-11470.1	-60108.0	-280.	319.4	
C	1882.2				-11539.4	0.00	0.0	372.9	COMB
C	-33093.6				0.00	-63285.6	0.0	0.0	COMB
E	38055.5	10575.36	6652.62	96.23	9538.58	3709.21	0.0	372.9	

SOFiSTiK AG - www.sofistik.de

Composite bridge 38+50+38, b=14.25m, 2x2HL1100R HISTAR460 , slab 0.30m C30/37

Design forces and moments
(C/E = characteristic plastic/elastic, D=plast.Design, F=elast. Design)

	N[kN]	Vy[kN]	Vz[kN]	Mt[kNm]	My[kNm]	Mz[kNm]	y[mm]	z[mm]	BUCK
E	-38055.5	10575.36	6652.62	96.23	-9538.58	-3709.21	0.0	372.9	
D	33916.3	37992.72	25995.66	66234.62	18630.17	42170.82	186.1	-81.2	
D	-45818.5				32864.53	0.00	0.0	372.9	COMB
D	-22062.4				0.00	43383.25	0.0	0.0	COMB
D	166958.9	37992.72	25995.66	66234.62	-9972.46	-42127.1	-186.	317.5	
D	1693.7				-10032.5	0.00	0.0	372.9	COMB
D	-22062.4				0.00	-43383.3	0.0	0.0	COMB
F	33091.7	9195.97	5784.89	64.15	8294.41	3225.40	0.0	372.9	
F	-33091.7	9195.97	5784.89	64.15	-8294.41	-3225.40	0.0	372.9	

Additional Design Data

M	periphery-O/-I [m2/m]	[m2/m]	deff [mm]	t-min [mm]	t-max [mm]	SMP [o/o]	thet-p [tm2/m]	thet-y [tm2/m]	thet-z [tm2/m]	thet-yz [tm2/m]
	25.104		9.1	3.1	300.0	0.0	22.964	0.310	22.653	
1	4.550		47.0	45.0	52.0	0.0	0.102	0.071	0.031	
25	0.020		1174.0			0.0	0.000	0.000		
**	0.004		32.0			0.0	0.000		0.000	
31	16.530		265.5	50.0	300.0	0.0	22.626	0.004	22.622	
**	4.000		3.1	3.1	3.1	0.0	0.000	0.000	0.000	

Cross section No. 553.1 = CS 1 - steel alone

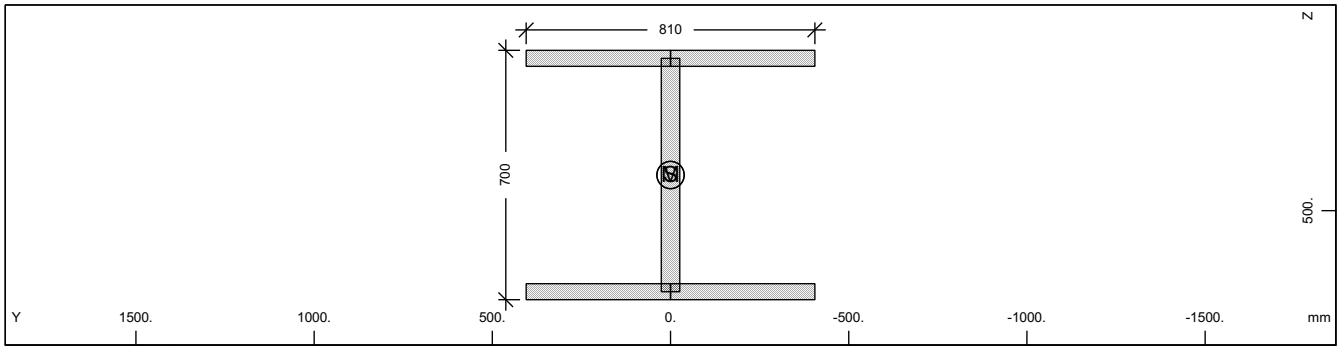

Cross section No. 553

Static properties of cross section

Mat NoR	A[cm2] It[cm4]	Ay/Az/Ayz [cm2]	Iy/Iz/Iyz [cm4]	ys/zs [mm]	modules [N/mm2]	gam [kN/m]
1	1069.60	607.50	903669.7	0.0	210000	8.40
	6270.0	288.17	398580.9	400.0	80769	

Additional static properties of cross section

Alfa-T [1/°K]	ymin ymax [mm]	zmin zmax [mm]	hymin hzmin [mm]	AK AB [cm2]	MB	Tau-T Tau-B [1/m3]	Tau-Vy Tau-Vz [1/m2]
1.2E-05	-405.0	-350.0		5.910E+02		6.508E+02	2.058E+01
	405.0	350.0				1.189E+02	3.134E+01

Section values for warping

Wmin[cm2]	Wmax[cm2]	CM[cm6]	CMS[cm4]	ASwyy[cm6]	ASwzz[cm6]	ry[mm]	rz[mm]
-1326.38	1326.38	427502762.	651581.6	-3.01	-6.82	0.0	0.0

Design values of cross section

Mat NoR	A[cm2] It[cm4]	Ay/Az/Ayz [cm2]	Iy/Iz/Iyz [cm4]	ys/zs [mm]	modules [N/mm2]	gam [kN/m]
1	1069.60	607.50	903669.7	0.0	182609	8.40
	6270.0	288.17	398580.9	400.0	70234	

SOFiSTiK AG - www.sofistik.de

Composite bridge 38+50+38, b=14.25m, 2x2HL1100R HISTAR460 , slab 0.30m C30/37

Design forces and moments
(C/E = characteristic plastic/elastic, D=plast.Design, F=elast. Design)

	N[kN]	Vy[kN]	Vz[kN]	Mt[kNm]	My[kNm]	Mz[kNm]	y[mm]	z[mm]	BUCK
C	35831.6	14099.76	6587.62	488.52	9866.45	5093.69	0.0	400.0	c d
C	0.0				0.00	0.00	0.0	0.0	COMB
E	35831.6	9399.84	6171.79	297.21	8649.41	3296.90	0.0	400.0	
D	31157.9	12260.66	5728.37	424.80	8579.52	4429.29	0.0	400.0	
D	0.0				0.00	0.00	0.0	0.0	COMB
F	31157.9	8173.78	5366.77	258.44	7521.22	2866.87	0.0	400.0	

Additional Design Data

M	periphery-O/-I [m2/m]	[m2/m]	deff [mm]	t-min [mm]	t-max [mm]	SMP [o/o]	thet-p [tm2/m]	thet-y [tm2/m]	thet-z [tm2/m]	thet-yz [tm2/m]
	4.550		47.0	45.0	52.0	0.0	0.102	0.071	0.031	

Cross section No. 553.2 = CS 10 - prefab. slab C1

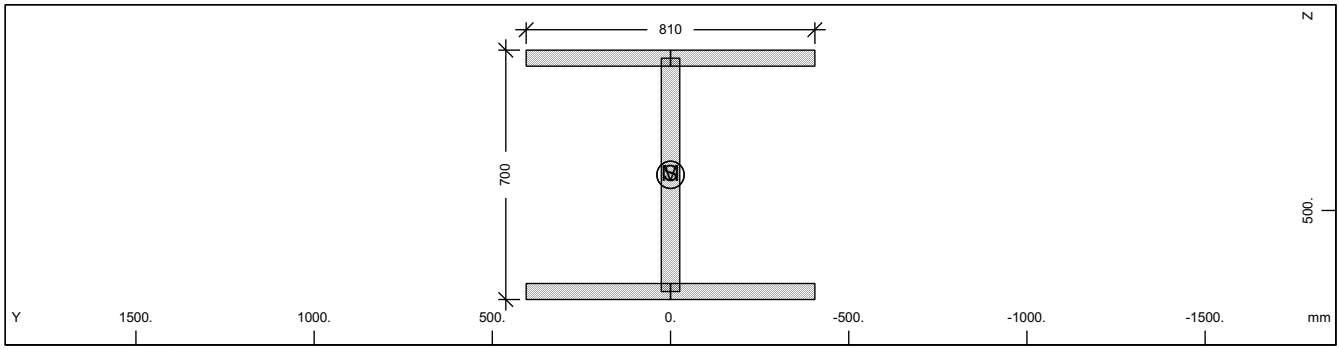

Cross section No. 553

Static properties of cross section

Mat NoR	A[cm2] It[cm4]	Ay/Az/Ayz [cm2]	Iy/Iz/Iyz [cm4]	ys/zs [mm]	modules [N/mm2]	gam [kN/m]
1	1069.60	607.50	903669.7	0.0	210000	8.40
	6270.0	288.17	398580.9	400.0	80769	

Additional static properties of cross section

Alfa-T [1/°K]	ymin ymax [mm]	zmin zmax [mm]	hymin hzmin [mm]	AK AB [cm2]	MB	Tau-T Tau-B [1/m3]	Tau-Vy Tau-Vz [1/m2]
1.2E-05	-405.0	-350.0		5.910E+02		6.508E+02	2.058E+01
	405.0	350.0				1.189E+02	3.134E+01

Section values for warping

Wmin[cm2]	Wmax[cm2]	CM[cm6]	CMS[cm4]	ASwyy[cm6]	ASwzz[cm6]	ry[mm]	rz[mm]
-1326.38	1326.38	427502762.	651581.6	-3.01	-6.82	0.0	0.0

Design values of cross section

Mat NoR	A[cm2] It[cm4]	Ay/Az/Ayz [cm2]	Iy/Iz/Iyz [cm4]	ys/zs [mm]	modules [N/mm2]	gam [kN/m]
1	1069.60	607.50	903669.7	0.0	182609	8.40
	6270.0	288.17	398580.9	400.0	70234	

Design forces and moments
(C/E = characteristic plastic/elastic, D=plast.Design, F=elast. Design)

	N[kN]	Vy[kN]	Vz[kN]	Mt[kNm]	My[kNm]	Mz[kNm]	y[mm]	z[mm]	BUCK
C	35831.6	14099.76	6587.62	488.52	9866.45	5093.69	0.0	400.0	c d
C	0.0				0.00	0.00	0.0	0.0	COMB
E	35831.6	9399.84	6171.79	297.21	8649.41	3296.90	0.0	400.0	
D	31157.9	12260.66	5728.37	424.80	8579.52	4429.29	0.0	400.0	
D	0.0				0.00	0.00	0.0	0.0	COMB
F	31157.9	8173.78	5366.77	258.44	7521.22	2866.87	0.0	400.0	

SOFiSTiK AG - www.sofistik.de

Composite bridge 38+50+38, b=14.25m, 2x2HL1100R HISTAR460 , slab 0.30m C30/37

Additional Design Data

M	periphery-O/-I [m2/m]	[m2/m]	deff [mm]	t-min [mm]	t-max [mm]	SMP [o/o]	thet-p [tm2/m]	thet-y [tm2/m]	thet-z [tm2/m]	thet-yz [tm2/m]
	4.550		47.0	45.0	52.0	0.0	0.102	0.071	0.031	

Cross section No. 553.3 = CS 20 - in-situ conc:C2

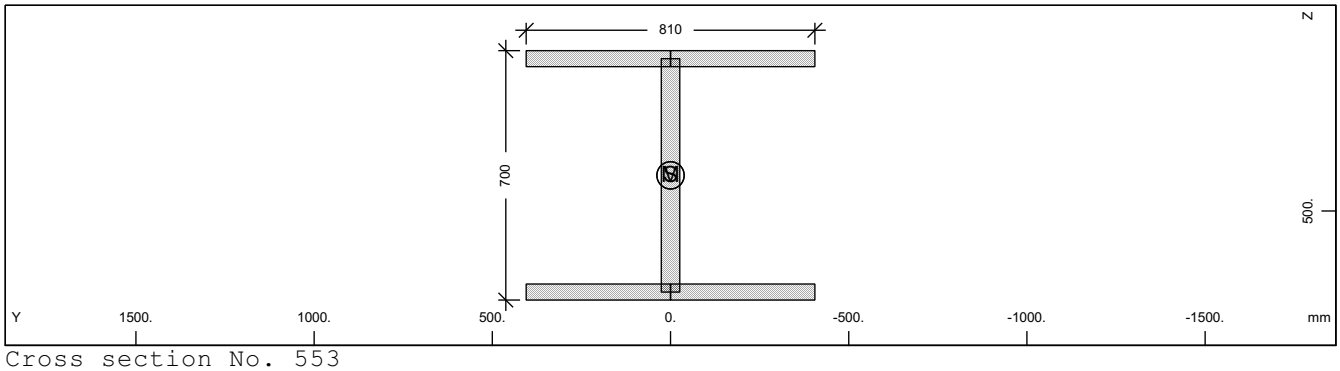

Cross section No. 553

Static properties of cross section

Mat NoR	A[cm2] It[cm4]	Ay/Az/Ayz [cm2]	Iy/Iz/Iyz [cm4]	ys/zs [mm]	modules [N/mm2]	gam [kN/m]
1	1069.60	607.50	903669.7	0.0	210000	8.40
	6270.0	288.17	398580.9	400.0	80769	

Additional static properties of cross section

Alfa-T [1/°K]	ymin ymax [mm]	zmin zmax [mm]	hymin hzmin [mm]	AK AB [cm2]	MB	Tau-T Tau-B [1/m3]	Tau-Vy Tau-Vz [1/m2]
1.2E-05	-405.0	-350.0		5.910E+02		6.508E+02	2.058E+01
	405.0	350.0				1.189E+02	3.134E+01

Section values for warping

Wmin[cm2]	Wmax[cm2]	CM[cm6]	CMS[cm4]	ASwyy[cm6]	ASwzz[cm6]	ry[mm]	rz[mm]
-1326.38	1326.38	427502762.	651581.6	-3.01	-6.82	0.0	0.0

Design values of cross section

Mat NoR	A[cm2] It[cm4]	Ay/Az/Ayz [cm2]	Iy/Iz/Iyz [cm4]	ys/zs [mm]	modules [N/mm2]	gam [kN/m]
1	1069.60	607.50	903669.7	0.0	182609	8.40
	6270.0	288.17	398580.9	400.0	70234	

Design forces and moments
(C/E = characteristic plastic/elastic, D=plast.Design, F=elast. Design)

	N[kN]	Vy[kN]	Vz[kN]	Mt[kNm]	My[kNm]	Mz[kNm]	y[mm]	z[mm]	BUCK
C	35831.6	14099.76	6587.62	488.52	9866.45	5093.69	0.0	400.0	c d
C	0.0				0.00	0.00	0.0	0.0	COMB
E	35831.6	9399.84	6171.79	297.21	8649.41	3296.90	0.0	400.0	
D	31157.9	12260.66	5728.37	424.80	8579.52	4429.29	0.0	400.0	
D	0.0				0.00	0.00	0.0	0.0	COMB
F	31157.9	8173.78	5366.77	258.44	7521.22	2866.87	0.0	400.0	

Additional Design Data

M	periphery-O/-I [m2/m]	[m2/m]	deff [mm]	t-min [mm]	t-max [mm]	SMP [o/o]	thet-p [tm2/m]	thet-y [tm2/m]	thet-z [tm2/m]	thet-yz [tm2/m]
	4.550		47.0	45.0	52.0	0.0	0.102	0.071	0.031	

SOFiSTiK AG - www.sofistik.de

Composite bridge 38+50+38, b=14.25m, 2x2HL1100R HISTAR460 , slab 0.30m C30/37

Cross section No. 553.4 = CS 21 - reinf active:C2

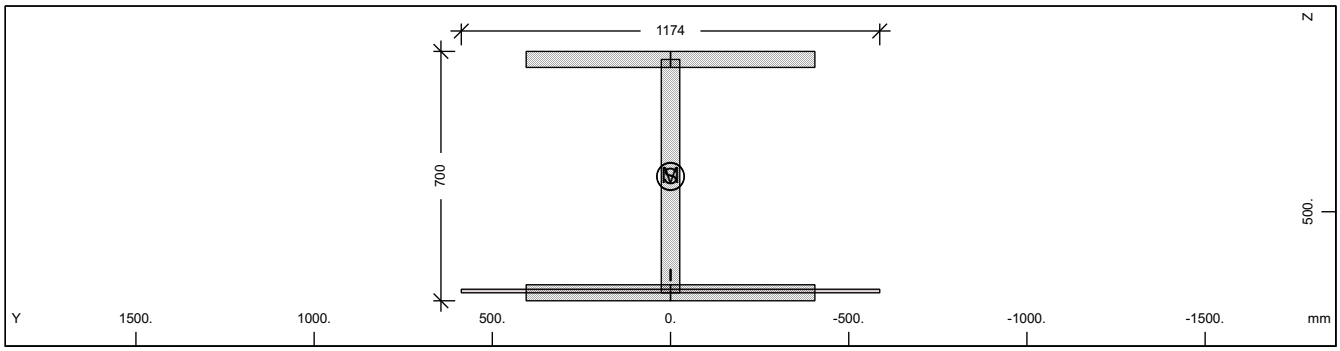

Cross section No. 553

Static properties of cross section

Mat NoR	A[cm2] It[cm4]	Ay/Az/Ayz [cm2]	Iy/Iz/Iyz [cm4]	ys/zs [mm]	modules [N/mm2]	gam [kN/m]
1	1076.18	607.50	910303.2	0.0	210000	8.69
	6270.0	288.72	398580.9	401.9	80769	

Additional static properties of cross section

Alfa-T [1/°K]	ymin ymax [mm]	zmin zmax [mm]	hymin hzmin [mm]	AK AB [cm2]	MB	Tau-T Tau-B [1/m3]	Tau-Vy Tau-Vz [1/m2]
1.2E-05	-587.0	-351.9		9.934E+01		1.715E+02	2.058E+01
	587.0	348.1		1.174E+02		1.189E+02	3.133E+01

Section values for warping

Wmin[cm2]	Wmax[cm2]	CM[cm6]	CMS[cm4]	ASwyy[cm6]	ASwzz[cm6]	ry[mm]	rz[mm]
-1326.38	1326.38	427502820.	651581.7	-1.15	-2.63	0.0	-0.5

Partial cross sections

Mat NoR	A[cm2] It[cm4]	Ay/Az/Ayz [cm2]	Iy/Iz/Iyz [cm4]	ys/zs [mm]	modules [N/mm2]	gam [kN/m]
1	1069.60	607.50	903669.7	0.0	210000	8.40
	7990.7	288.72	398580.9	400.0	80769	
25	117.40		9.8	0.0	10667	0.29
	539368.1	0.00	0.0	722.5	4444	
210	0.64	0.00	0.0	0.0	200000	0.00
	2.2	0.00	0.0	677.5	76923	

Design values of cross section

Mat NoR	A[cm2] It[cm4]	Ay/Az/Ayz [cm2]	Iy/Iz/Iyz [cm4]	ys/zs [mm]	modules [N/mm2]	gam [kN/m]
1	1074.78	607.50	908871.5	0.0	182609	8.69
	6270.0	288.72	398580.9	401.5	70234	

Design forces and moments
(C/E = characteristic plastic/elastic, D=plast.Design, F=elast. Design)

	N[kN]	Vy[kN]	Vz[kN]	Mt[kNm]	My[kNm]	Mz[kNm]	y[mm]	z[mm]	BUCK
C	35863.8	14118.33	7243.22	609.92	9999.89	5145.57	0.3	398.7	c c
C	-115.5				9998.92	0.00	0.0	401.9	COMB
C	-176.1				0.00	5145.63	0.0	0.0	COMB
C	-36216.0	14118.33	7243.22	609.92	-9887.60	-5145.48	-0.3	408.7	
C	-236.7				-9886.02	0.00	0.0	401.9	COMB
C	-176.1				0.00	-5145.63	0.0	0.0	COMB
E	36051.9	9399.84	6173.45	96.22	8664.75	3296.90	0.0	401.9	
E	-36051.9	9399.84	6173.45	96.22	-8664.75	-3296.90	0.0	401.9	
D	31185.9	12276.81	6259.15	507.29	8670.18	4463.89	0.2	399.2	
D	-84.3				8669.65	0.00	0.0	401.9	COMB
D	-117.4				0.00	4463.97	0.0	0.0	COMB
D	-31420.7	12276.81	6259.15	507.29	-8595.17	-4463.85	-0.2	406.9	
D	-150.5				-8594.38	0.00	0.0	401.9	COMB
D	-117.4				0.00	-4463.97	0.0	0.0	COMB

SOFiSTiK AG - www.sofistik.de

Composite bridge 38+50+38, b=14.25m, 2x2HL1100R HISTAR460 , slab 0.30m C30/37

Design forces and moments
(C/E = characteristic plastic/elastic, D=plast.Design, F=elast. Design)

	N[kN]	Vy[kN]	Vz[kN]	Mt[kNm]	My[kNm]	Mz[kNm]	y[mm]	z[mm]	BUCK
F	31349.5	8173.78	5368.22	64.15	7534.57	2866.87	0.0	401.9	
F	-31349.5	8173.78	5368.22	64.15	-7534.57	-2866.87	0.0	401.9	

Additional Design Data

M	periphery-O/-I [m2/m]	[m2/m]	deff [mm]	t-min [mm]	t-max [mm]	SMP [o/o]	thet-p [tm2/m]	thet-y [tm2/m]	thet-z [tm2/m]	thet-yz [tm2/m]
	4.574		47.1	32.0	52.0	0.0	0.105	0.074	0.031	
1	4.550		47.0	45.0	52.0	0.0	0.102	0.071	0.031	
25	0.020		1174.0			0.0	0.000	0.000		
**	0.004		32.0			0.0	0.000		0.000	

Cross section No. 553.5 = CS 30 - in-situ conc:C3

Cross section No. 651 - VFT

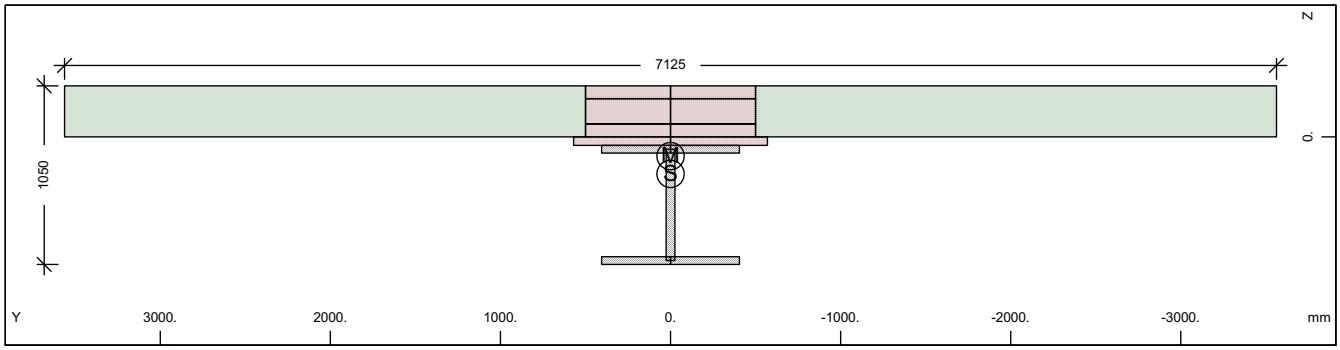

Cross section No. 651 - VFT

Static properties of cross section

Mat NoR	A[cm2] It[cm4]	Ay/Az/Ayz [cm2]	Iy/Iz/Iyz [cm4]	ys/zs [mm]	y/z-sc [mm]	modules [N/mm2]	gam [kN/m]
1	1642.18	1074.80	1946674.3	0.0	0.0	210000	63.26
	6270.0	462.67	897984.0	217.7	112.9	80769	

Additional static properties of cross section

Alfa-T [1/°K]	ymin ymax [mm]	zmin zmax [mm]	hymin hzmin [mm]	AK AB [cm2]	MB	Tau-T Tau-B [1/m3]	Tau-Vy Tau-Vz [1/m2]
1.2E-05	-3562.5	-517.7		2.115E+03		3.225E+01	1.326E+01
	3562.5	532.3		2.195E+04		1.189E+02	2.503E+01

Section values for warping

Wmin[cm2]	Wmax[cm2]	CM[cm6]	CMS[cm4]	ASwyy[cm6]	ASwzz[cm6]	ry[mm]	rz[mm]
-9367.06	9367.061042624125.		1423880.6	2.35	5.10	0.0	321.1

Partial cross sections

Mat NoR	A[cm2] It[cm4]	Ay/Az/Ayz [cm2]	Iy/Iz/Iyz [cm4]	ys/zs [mm]	modules [N/mm2]	gam [kN/m]
1	1069.60	374.63	903669.7	0.0	210000	8.40
	7990.7	428.98	398580.9	400.0	80769	
30	3570.00	4030.92	146691.2	0.0	32837	8.93
	904750.1	193.18	3117310.1	-122.1	13682	
31	18375.00	41481168.	0.0	0.0	0	45.94
	5512501.0	37388.97901762872.		-150.0	0	
300	15.07	17.99	847.8	0.0	200000	0.00
	0.0	1.01	12560.0	-150.0	76923	

SOFiSTiK AG - www.sofistik.de

Composite bridge 38+50+38, b=14.25m, 2x2HL1100R HISTAR460 , slab 0.30m C30/37

Design values of cross section

Mat NoR	A[cm2] It[cm4]	Ay/Az/Ayz [cm2]	Iy/Iz/Iyz [cm4]	ys/zs [mm]	modules [N/mm2]	gam [kN/m]
1	1511.92	915.42	1777982.7	0.0	182609	63.26
	6270.0	455.03	784247.7	247.0	70234	

Design forces and moments
(C/E = characteristic plastic/elastic, D=plast.Design, F=elast. Design)

	N[kN]	Vy[kN]	Vz[kN]	Mt[kNm]	My[kNm]	Mz[kNm]	y[mm]	z[mm]	BUCK
C	36585.2	50744.10	35388.07	99055.71	22135.36	59290.14	297.4	-132.	c d
C	-60238.3				34632.55	0.00	0.0	217.7	COMB
C	-32917.5				0.00	62637.10	0.0	0.0	COMB
C	-102420.	50744.10	35388.07	99055.72	-10272.8	-59290.1	-297.	378.2	
C	-5596.7				-10722.3	0.00	0.0	217.7	COMB
C	-32917.5				0.00	-62637.1	0.0	0.0	COMB
E	55012.9	5833.03	7727.07	523.56	7213.94	3022.57	0.0	217.7	
E	-31506.7	5833.03	7727.07	523.56	-12252.0	-3022.57	0.0	217.7	
D	31813.2	36778.50	25464.89	66149.80	18453.32	41510.95	197.9	-81.3	
D	-39023.3				25263.91	0.00	0.0	217.7	COMB
D	-21945.0				0.00	42829.79	0.0	0.0	COMB
D	-75703.2	36778.50	25464.89	66149.80	-8932.85	-41511.0	-198.	378.3	
D	-4866.7				-9323.74	0.00	0.0	217.7	COMB
D	-21945.0				0.00	-42829.8	0.0	0.0	COMB
F	47837.3	3888.69	6719.19	349.04	4809.30	2015.05	0.0	217.7	
F	-21004.4	3888.69	6719.19	349.04	-10653.9	-2015.05	0.0	217.7	

Additional Design Data

M	periphery-O/-I [m2/m]	[m2/m]	deff [mm]	t-min [mm]	t-max [mm]	SMP [o/o]	thet-p [tm2/m]	thet-y [tm2/m]	thet-z [tm2/m]	thet-yz [tm2/m]
	25.080		13.1	0.8	300.0	0.0	22.945	0.292	22.653	
1	4.550		47.0	45.0	52.0	0.0	0.102	0.071	0.031	
30	4.280		600.0	50.0	300.0	0.0	0.082	0.004	0.078	
31	12.250		300.0	300.0	300.0	0.0	22.544		22.544	
**	4.000		0.8	0.8	0.8	0.0	0.000	0.000	0.000	

Cross section No. 651.1 = CS 1 - steel alone

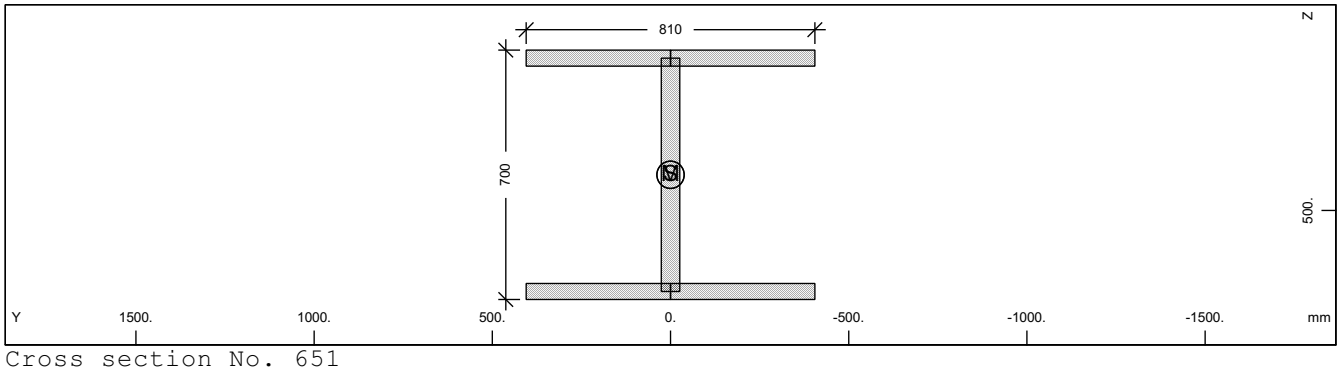

Cross section No. 651

Static properties of cross section

Mat NoR	A[cm2] It[cm4]	Ay/Az/Ayz [cm2]	Iy/Iz/Iyz [cm4]	ys/zs [mm]	modules [N/mm2]	gam [kN/m]
1	1069.60	607.50	903669.7	0.0	210000	8.40
	6270.0	288.17	398580.9	400.0	80769	

Additional static properties of cross section

Alfa-T [1/°K]	ymin ymax [mm]	zmin zmax [mm]	hymin hzmin [mm]	AK AB [cm2]	MB	Tau-T Tau-B [1/m3]	Tau-Vy Tau-Vz [1/m2]
1.2E-05	-405.0	-350.0		5.910E+02		6.508E+02	2.058E+01
	405.0	350.0				1.189E+02	3.134E+01

SOFiSTiK AG - www.sofistik.de

Composite bridge 38+50+38, b=14.25m, 2x2HL1100R HISTAR460 , slab 0.30m C30/37

Section values for warping

Wmin[cm2]	Wmax[cm2]	CM[cm6]	CMS[cm4]	ASwyy[cm6]	ASwzz[cm6]	ry[mm]	rz[mm]
-1326.38	1326.38	427502762.	651581.6	-3.01	-6.82	0.0	0.0

Design values of cross section

Mat NoR	A[cm2] It[cm4]	Ay/Az/Ayz [cm2]	Iy/Iz/Iyz [cm4]	ys/zs [mm]	modules [N/mm2]	gam [kN/m]
1	1069.60	607.50	903669.7	0.0	182609	8.40
	6270.0	288.17	398580.9	400.0	70234	

Design forces and moments
(C/E = characteristic plastic/elastic, D=plast.Design, F=elast. Design)

	N[kN]	Vy[kN]	Vz[kN]	Mt[kNm]	My[kNm]	Mz[kNm]	y[mm]	z[mm]	BUCK
C	35831.6	14099.76	6587.62	488.52	9866.45	5093.69	0.0	400.0	c d
C	0.0				0.00	0.00	0.0	0.0	COMB
E	35831.6	9399.84	6171.79	297.21	8649.41	3296.90	0.0	400.0	
D	31157.9	12260.66	5728.37	424.80	8579.52	4429.29	0.0	400.0	
D	0.0				0.00	0.00	0.0	0.0	COMB
F	31157.9	8173.78	5366.77	258.44	7521.22	2866.87	0.0	400.0	

Additional Design Data

M	periphery-O/-I [m2/m]	[m2/m]	deff [mm]	t-min [mm]	t-max [mm]	SMP [o/o]	thet-p [tm2/m]	thet-y [tm2/m]	thet-z [tm2/m]	thet-yz [tm2/m]
	4.550		47.0	45.0	52.0	0.0	0.102	0.071	0.031	

Cross section No. 651.2 = CS 10 - prefab. slab C1

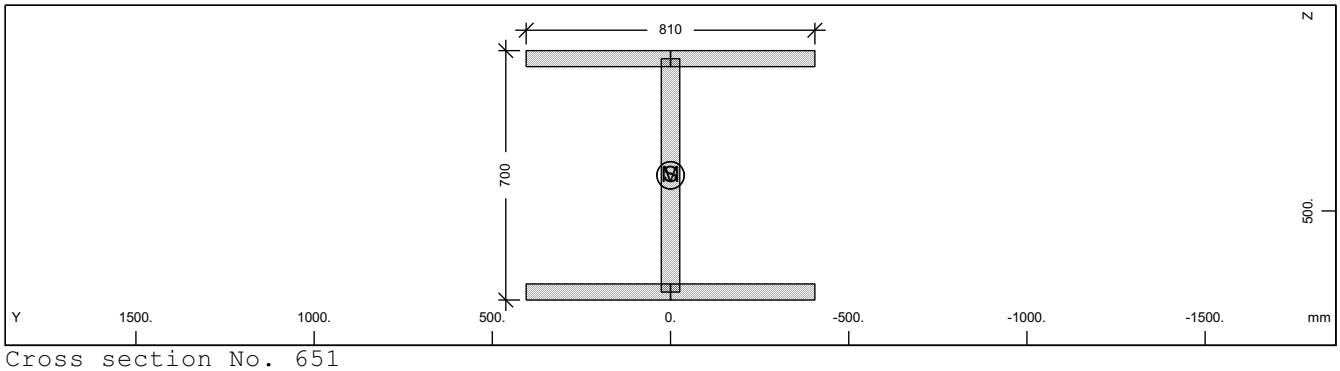

Cross section No. 651

Static properties of cross section

Mat NoR	A[cm2] It[cm4]	Ay/Az/Ayz [cm2]	Iy/Iz/Iyz [cm4]	ys/zs [mm]	modules [N/mm2]	gam [kN/m]
1	1069.60	607.50	903669.7	0.0	210000	8.40
	6270.0	288.17	398580.9	400.0	80769	

Additional static properties of cross section

Alfa-T [1/°K]	ymin ymax [mm]	zmin zmax [mm]	hymin hzmin [mm]	AK AB [cm2]	MB	Tau-T Tau-B [1/m3]	Tau-Vy Tau-Vz [1/m2]
1.2E-05	-405.0	-350.0		5.910E+02		6.508E+02	2.058E+01
	405.0	350.0				1.189E+02	3.134E+01

Section values for warping

Wmin[cm2]	Wmax[cm2]	CM[cm6]	CMS[cm4]	ASwyy[cm6]	ASwzz[cm6]	ry[mm]	rz[mm]
-1326.38	1326.38	427502762.	651581.6	-3.01	-6.82	0.0	0.0

Design values of cross section

Mat NoR	A[cm2] It[cm4]	Ay/Az/Ayz [cm2]	Iy/Iz/Iyz [cm4]	ys/zs [mm]	modules [N/mm2]	gam [kN/m]
1	1069.60	607.50	903669.7	0.0	182609	8.40
	6270.0	288.17	398580.9	400.0	70234	

SOFiSTiK AG - www.sofistik.de

Composite bridge 38+50+38, b=14.25m, 2x2HL1100R HISTAR460 , slab 0.30m C30/37

Design forces and moments
(C/E = characteristic plastic/elastic, D=plast.Design, F=elast. Design)

	N[kN]	Vy[kN]	Vz[kN]	Mt[kNm]	My[kNm]	Mz[kNm]	y[mm]	z[mm]	BUCK
C	35831.6	14099.76	6587.62	488.52	9866.45	5093.69	0.0	400.0	c d
C	0.0				0.00	0.00	0.0	0.0	COMB
E	35831.6	9399.84	6171.79	297.21	8649.41	3296.90	0.0	400.0	
D	31157.9	12260.66	5728.37	424.80	8579.52	4429.29	0.0	400.0	
D	0.0				0.00	0.00	0.0	0.0	COMB
F	31157.9	8173.78	5366.77	258.44	7521.22	2866.87	0.0	400.0	

Additional Design Data

M	periphery-O/-I [m2/m]	[m2/m]	deff [mm]	t-min [mm]	t-max [mm]	SMP [o/o]	thet-p [tm2/m]	thet-y [tm2/m]	thet-z [tm2/m]	thet-yz [tm2/m]
	4.550		47.0	45.0	52.0	0.0	0.102	0.071	0.031	

Cross section No. 651.3 = CS 20 - in-situ conc:C2

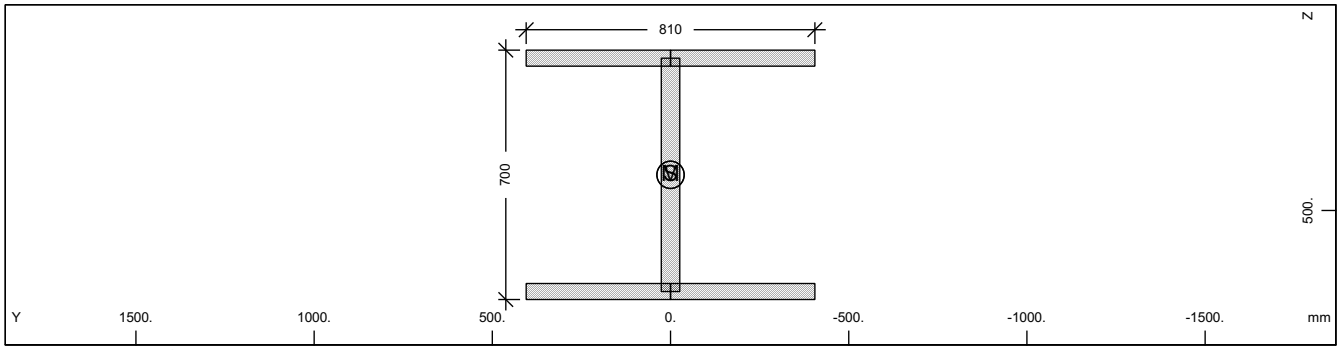

Cross section No. 651

Static properties of cross section

Mat NoR	A[cm2] It[cm4]	Ay/Az/Ayz [cm2]	Iy/Iz/Iyz [cm4]	ys/zs [mm]	modules [N/mm2]	gam [kN/m]
1	1069.60	607.50	903669.7	0.0	210000	8.40
	6270.0	288.17	398580.9	400.0	80769	

Additional static properties of cross section

Alfa-T [1/°K]	ymin ymax [mm]	zmin zmax [mm]	hymin hzmin [mm]	AK AB [cm2]	MB	Tau-T Tau-B [1/m3]	Tau-Vy Tau-Vz [1/m2]
1.2E-05	-405.0	-350.0		5.910E+02		6.508E+02	2.058E+01
	405.0	350.0				1.189E+02	3.134E+01

Section values for warping

Wmin[cm2]	Wmax[cm2]	CM[cm6]	CMS[cm4]	ASwyy[cm6]	ASwzz[cm6]	ry[mm]	rz[mm]
-1326.38	1326.38	427502762.	651581.6	-3.01	-6.82	0.0	0.0

Design values of cross section

Mat NoR	A[cm2] It[cm4]	Ay/Az/Ayz [cm2]	Iy/Iz/Iyz [cm4]	ys/zs [mm]	modules [N/mm2]	gam [kN/m]
1	1069.60	607.50	903669.7	0.0	182609	8.40
	6270.0	288.17	398580.9	400.0	70234	

Design forces and moments
(C/E = characteristic plastic/elastic, D=plast.Design, F=elast. Design)

	N[kN]	Vy[kN]	Vz[kN]	Mt[kNm]	My[kNm]	Mz[kNm]	y[mm]	z[mm]	BUCK
C	35831.6	14099.76	6587.62	488.52	9866.45	5093.69	0.0	400.0	c d
C	0.0				0.00	0.00	0.0	0.0	COMB
E	35831.6	9399.84	6171.79	297.21	8649.41	3296.90	0.0	400.0	
D	31157.9	12260.66	5728.37	424.80	8579.52	4429.29	0.0	400.0	
D	0.0				0.00	0.00	0.0	0.0	COMB
F	31157.9	8173.78	5366.77	258.44	7521.22	2866.87	0.0	400.0	

SOFiSTiK AG - www.sofistik.de

Composite bridge 38+50+38, b=14.25m, 2x2HL1100R HISTAR460 , slab 0.30m C30/37

Additional Design Data

M	periphery-O/-I [m2/m]	[m2/m]	deff [mm]	t-min [mm]	t-max [mm]	SMP [o/o]	thet-p [tm2/m]	thet-y [tm2/m]	thet-z [tm2/m]	thet-yz [tm2/m]
	4.550		47.0	45.0	52.0	0.0	0.102	0.071	0.031	

Cross section No. 651.4 = CS 21 - reinf active:C2

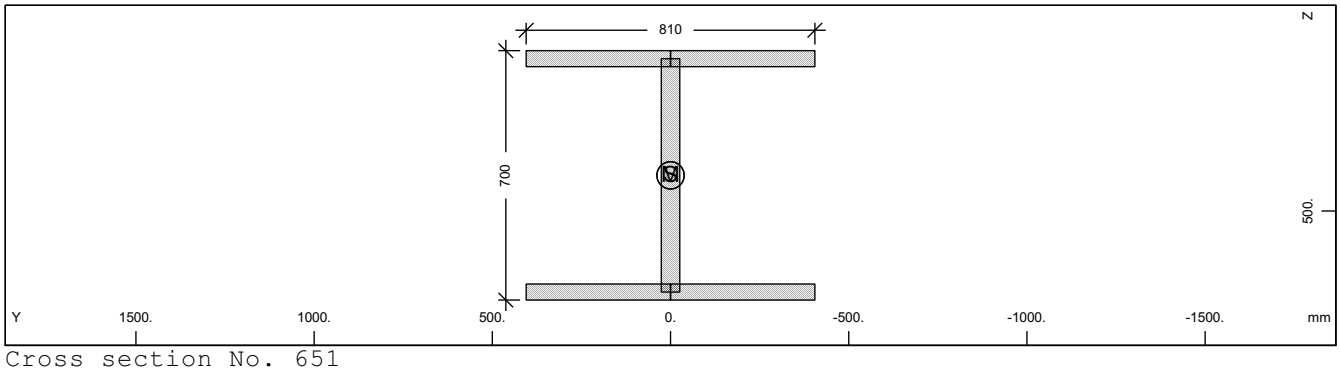

Cross section No. 651

Static properties of cross section

Mat NoR	A[cm2] It[cm4]	Ay/Az/Ayz [cm2]	Iy/Iz/Iyz [cm4]	ys/zs [mm]	modules [N/mm2]	gam [kN/m]
1	1069.60	607.50	903669.7	0.0	210000	8.40
	6270.0	288.17	398580.9	400.0	80769	

Additional static properties of cross section

Alfa-T [1/°K]	ymin ymax [mm]	zmin zmax [mm]	hymin hzmin [mm]	AK AB [cm2]	MB	Tau-T Tau-B [1/m3]	Tau-Vy Tau-Vz [1/m2]
1.2E-05	-405.0	-350.0		5.910E+02		6.508E+02	2.058E+01
	405.0	350.0				1.189E+02	3.134E+01

Section values for warping

Wmin[cm2]	Wmax[cm2]	CM[cm6]	CMS[cm4]	ASwyy[cm6]	ASwzz[cm6]	ry[mm]	rz[mm]
-1326.38	1326.38	427502762.	651581.6	-3.01	-6.82	0.0	0.0

Design values of cross section

Mat NoR	A[cm2] It[cm4]	Ay/Az/Ayz [cm2]	Iy/Iz/Iyz [cm4]	ys/zs [mm]	modules [N/mm2]	gam [kN/m]
1	1069.60	607.50	903669.7	0.0	182609	8.40
	6270.0	288.17	398580.9	400.0	70234	

Design forces and moments
(C/E = characteristic plastic/elastic, D=plast.Design, F=elast. Design)

	N[kN]	Vy[kN]	Vz[kN]	Mt[kNm]	My[kNm]	Mz[kNm]	y[mm]	z[mm]	BUCK
C	35831.6	14099.76	6587.62	488.52	9866.45	5093.69	0.0	400.0	c d
C	0.0				0.00	0.00	0.0	0.0	COMB
E	35831.6	9399.84	6171.79	297.21	8649.41	3296.90	0.0	400.0	
D	31157.9	12260.66	5728.37	424.80	8579.52	4429.29	0.0	400.0	
D	0.0				0.00	0.00	0.0	0.0	COMB
F	31157.9	8173.78	5366.77	258.44	7521.22	2866.87	0.0	400.0	

Additional Design Data

M	periphery-O/-I [m2/m]	[m2/m]	deff [mm]	t-min [mm]	t-max [mm]	SMP [o/o]	thet-p [tm2/m]	thet-y [tm2/m]	thet-z [tm2/m]	thet-yz [tm2/m]
	4.550		47.0	45.0	52.0	0.0	0.102	0.071	0.031	

SOFiSTiK AG - www.sofistik.de

Composite bridge 38+50+38, b=14.25m, 2x2HL1100R HISTAR460 , slab 0.30m C30/37

Cross section No. 651.5 = CS 30 - in-situ conc:C3

Cross section No. 652 - VFT

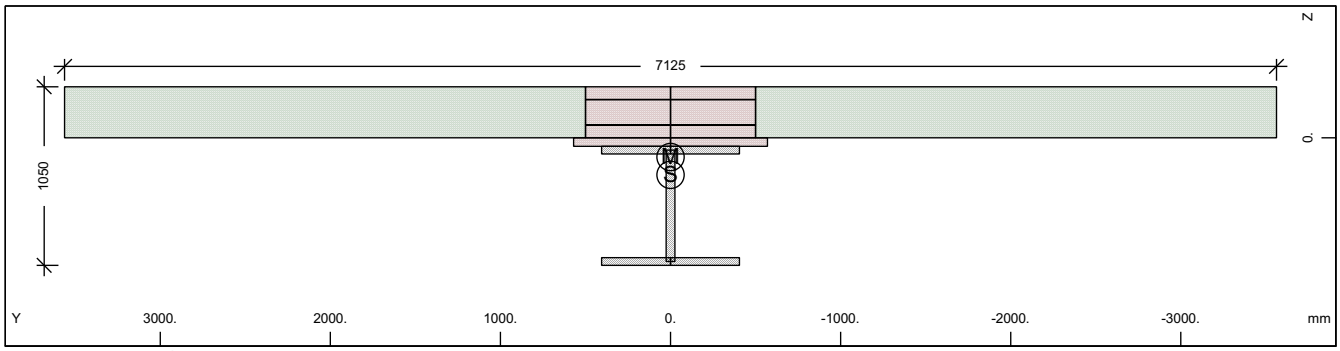

Cross section No. 652 - VFT

Static properties of cross section

Mat NoR	A[cm2] It[cm4]	Ay/Az/Ayz [cm2]	Iy/Iz/Iyz [cm4]	ys/zs [mm]	y/z-sc [mm]	modules [N/mm2]	gam [kN/m]
1	1642.18	1074.80	1946674.3	0.0	0.0	210000	63.26
	6270.0	462.67	897984.0	217.7	112.9	80769	

Additional static properties of cross section

Alfa-T [1/°K]	ymin ymax [mm]	zmin zmax [mm]	hymin hzmin [mm]	AK AB [cm2]	MB	Tau-T Tau-B [1/m3]	Tau-Vy Tau-Vz [1/m2]
1.2E-05	-3562.5	-517.7		2.115E+03		3.225E+01	1.326E+01
	3562.5	532.3		2.195E+04		1.189E+02	2.503E+01

Section values for warping

Wmin[cm2]	Wmax[cm2]	CM[cm6]	CMS[cm4]	ASwyy[cm6]	ASwzz[cm6]	ry[mm]	rz[mm]
-9367.06	9367.061	042624125.	1423880.6	2.35	5.10	0.0	321.1

Partial cross sections

Mat NoR	A[cm2] It[cm4]	Ay/Az/Ayz [cm2]	Iy/Iz/Iyz [cm4]	ys/zs [mm]	modules [N/mm2]	gam [kN/m]
1	1069.60	374.63	903669.7	0.0	210000	8.40
	7990.7	428.98	398580.9	400.0	80769	
30	3570.00	4030.92	146691.2	0.0	32837	8.93
	904750.1	193.18	3117310.1	-122.1	13682	
31	18375.00	41481168.	0.0	0.0	0	45.94
	5512501.0	37388.97901762872.		-150.0	0	
300	15.07	17.99	847.8	0.0	200000	0.00
	0.0	1.01	12560.0	-150.0	76923	

Design values of cross section

Mat NoR	A[cm2] It[cm4]	Ay/Az/Ayz [cm2]	Iy/Iz/Iyz [cm4]	ys/zs [mm]	modules [N/mm2]	gam [kN/m]
1	1511.92	915.42	1777982.7	0.0	182609	63.26
	6270.0	455.03	784247.7	247.0	70234	

Design forces and moments
(C/E = characteristic plastic/elastic, D=plast.Design, F=elast. Design)

	N[kN]	Vy[kN]	Vz[kN]	Mt[kNm]	My[kNm]	Mz[kNm]	y[mm]	z[mm]	BUCK
C	36585.2	50744.10	35388.07	99055.71	22135.36	59290.14	297.4	-132.	c c
C	-60238.3				34632.55	0.00	0.0	217.7	COMB
C	-32917.5				0.00	62637.10	0.0	0.0	COMB
C	-102420.	50744.10	35388.07	99055.72	-10272.8	-59290.1	-297.	378.2	
C	-5596.7				-10722.3	0.00	0.0	217.7	COMB
C	-32917.5				0.00	-62637.1	0.0	0.0	COMB
E	55012.9	5833.03	7727.07	523.56	7213.94	3022.57	0.0	217.7	
E	-31506.7	5833.03	7727.07	523.56	-12252.0	-3022.57	0.0	217.7	
D	31813.2	36778.50	25464.89	66149.80	18453.32	41510.95	197.9	-81.3	

SOFiSTiK AG - www.sofistik.de

Composite bridge 38+50+38, b=14.25m, 2x2HL1100R HISTAR460 , slab 0.30m C30/37

Design forces and moments
(C/E = characteristic plastic/elastic, D=plast.Design, F=elast. Design)

	N[kN]	Vy[kN]	Vz[kN]	Mt[kNm]	My[kNm]	Mz[kNm]	y[mm]	z[mm]	BUCK
D	-39023.3				25263.91	0.00	0.0	217.7	COMB
D	-21945.0				0.00	42829.79	0.0	0.0	COMB
D	-75703.2	36778.50	25464.89	66149.80	-8932.85	-41511.0	-198.	378.3	
D	-4866.7				-9323.74	0.00	0.0	217.7	COMB
D	-21945.0				0.00	-42829.8	0.0	0.0	COMB
F	47837.3	3888.69	6719.19	349.04	4809.30	2015.05	0.0	217.7	
F	-21004.4	3888.69	6719.19	349.04	-10653.9	-2015.05	0.0	217.7	

Additional Design Data

M	periphery-O/-I [m2/m]	[m2/m]	deff [mm]	t-min [mm]	t-max [mm]	SMP [o/o]	thet-p [tm2/m]	thet-y [tm2/m]	thet-z [tm2/m]	thet-yz [tm2/m]
	25.080		13.1	0.8	300.0	0.0	22.945	0.292	22.653	
1	4.550		47.0	45.0	52.0	0.0	0.102	0.071	0.031	
30	4.280		600.0	50.0	300.0	0.0	0.082	0.004	0.078	
31	12.250		300.0	300.0	300.0	0.0	22.544		22.544	
**	4.000		0.8	0.8	0.8	0.0	0.000	0.000	0.000	

Cross section No. 652.1 = CS 1 - steel alone

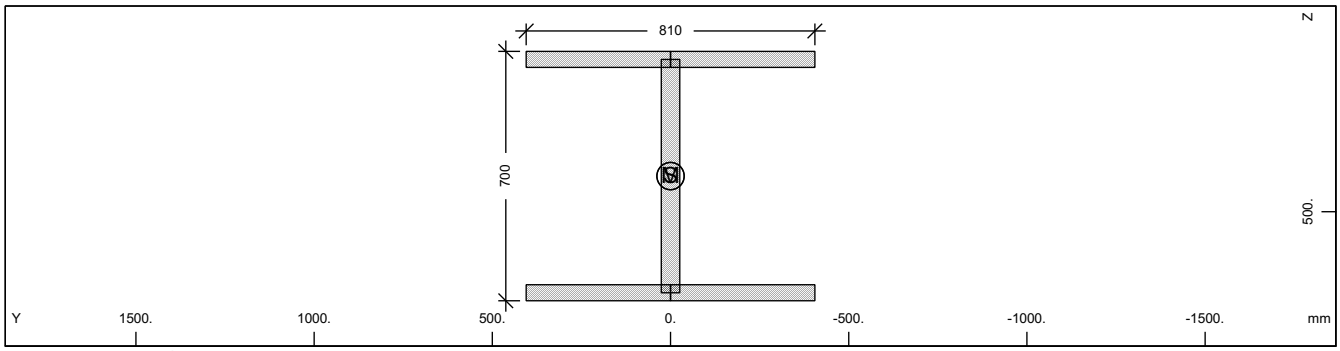

Cross section No. 652

Static properties of cross section

Mat NoR	A[cm2] It[cm4]	Ay/Az/Ayz [cm2]	Iy/Iz/Iyz [cm4]	ys/zs [mm]	modules [N/mm2]	gam [kN/m]
1	1069.60	607.50	903669.7	0.0	210000	8.40
	6270.0	288.17	398580.9	400.0	80769	

Additional static properties of cross section

Alfa-T [1/°K]	ymin ymax [mm]	zmin zmax [mm]	hymin hzmin [mm]	AK AB [cm2]	MB	Tau-T Tau-B [1/m3]	Tau-Vy Tau-Vz [1/m2]
1.2E-05	-405.0	-350.0		5.910E+02		6.508E+02	2.058E+01
	405.0	350.0				1.189E+02	3.134E+01

Section values for warping

Wmin[cm2]	Wmax[cm2]	CM[cm6]	CMS[cm4]	ASwyy[cm6]	ASwzz[cm6]	ry[mm]	rz[mm]
-1326.38	1326.38	427502762.	651581.6	-3.01	-6.82	0.0	0.0

Design values of cross section

Mat NoR	A[cm2] It[cm4]	Ay/Az/Ayz [cm2]	Iy/Iz/Iyz [cm4]	ys/zs [mm]	modules [N/mm2]	gam [kN/m]
1	1069.60	607.50	903669.7	0.0	182609	8.40
	6270.0	288.17	398580.9	400.0	70234	

Design forces and moments
(C/E = characteristic plastic/elastic, D=plast.Design, F=elast. Design)

	N[kN]	Vy[kN]	Vz[kN]	Mt[kNm]	My[kNm]	Mz[kNm]	y[mm]	z[mm]	BUCK
C	35831.6	14099.76	6587.62	488.52	9866.45	5093.69	0.0	400.0	c d
C	0.0				0.00	0.00	0.0	0.0	COMB
E	35831.6	9399.84	6171.79	297.21	8649.41	3296.90	0.0	400.0	
D	31157.9	12260.66	5728.37	424.80	8579.52	4429.29	0.0	400.0	

SOFiSTiK AG - www.sofistik.de

Composite bridge 38+50+38, b=14.25m, 2x2HL1100R HISTAR460 , slab 0.30m C30/37

Design forces and moments
(C/E = characteristic plastic/elastic, D=plast.Design, F=elast. Design)

	N[kN]	Vy[kN]	Vz[kN]	Mt[kNm]	My[kNm]	Mz[kNm]	y[mm]	z[mm]	BUCK
D	0.0				0.00	0.00	0.0	0.0	COMB
F	31157.9	8173.78	5366.77	258.44	7521.22	2866.87	0.0	400.0	

Additional Design Data

M	periphery-O/-I [m2/m]	[m2/m]	deff [mm]	t-min [mm]	t-max [mm]	SMP [o/o]	thet-p [tm2/m]	thet-y [tm2/m]	thet-z [tm2/m]	thet-yz [tm2/m]
	4.550		47.0	45.0	52.0	0.0	0.102	0.071	0.031	

Cross section No. 652.2 = CS 10 - prefab. slab C1

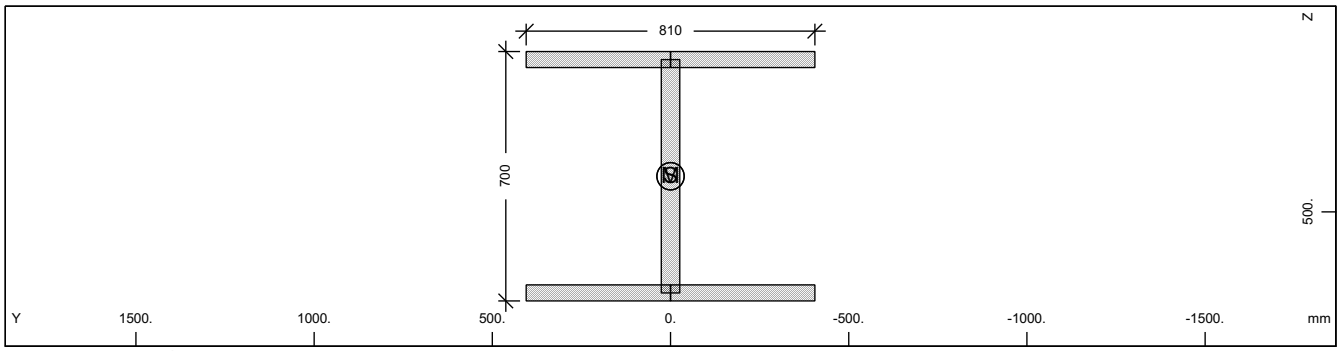

Cross section No. 652

Static properties of cross section

Mat NoR	A[cm2] It[cm4]	Ay/Az/Ayz [cm2]	Iy/Iz/Iyz [cm4]	ys/zs [mm]	modules [N/mm2]	gam [kN/m]
1	1069.60	607.50	903669.7	0.0	210000	8.40
	6270.0	288.17	398580.9	400.0	80769	

Additional static properties of cross section

Alfa-T [1/°K]	ymin ymax [mm]	zmin zmax [mm]	hymin hzmin [mm]	AK AB [cm2]	MB	Tau-T Tau-B [1/m3]	Tau-Vy Tau-Vz [1/m2]
1.2E-05	-405.0	-350.0		5.910E+02		6.508E+02	2.058E+01
	405.0	350.0				1.189E+02	3.134E+01

Section values for warping

Wmin[cm2]	Wmax[cm2]	CM[cm6]	CMS[cm4]	ASwyy[cm6]	ASwzz[cm6]	ry[mm]	rz[mm]
-1326.38	1326.38	427502762.	651581.6	-3.01	-6.82	0.0	0.0

Design values of cross section

Mat NoR	A[cm2] It[cm4]	Ay/Az/Ayz [cm2]	Iy/Iz/Iyz [cm4]	ys/zs [mm]	modules [N/mm2]	gam [kN/m]
1	1069.60	607.50	903669.7	0.0	182609	8.40
	6270.0	288.17	398580.9	400.0	70234	

Design forces and moments
(C/E = characteristic plastic/elastic, D=plast.Design, F=elast. Design)

	N[kN]	Vy[kN]	Vz[kN]	Mt[kNm]	My[kNm]	Mz[kNm]	y[mm]	z[mm]	BUCK
C	35831.6	14099.76	6587.62	488.52	9866.45	5093.69	0.0	400.0	c d
C	0.0				0.00	0.00	0.0	0.0	COMB
E	35831.6	9399.84	6171.79	297.21	8649.41	3296.90	0.0	400.0	
D	31157.9	12260.66	5728.37	424.80	8579.52	4429.29	0.0	400.0	
D	0.0				0.00	0.00	0.0	0.0	COMB
F	31157.9	8173.78	5366.77	258.44	7521.22	2866.87	0.0	400.0	

Additional Design Data

M	periphery-O/-I [m2/m]	[m2/m]	deff [mm]	t-min [mm]	t-max [mm]	SMP [o/o]	thet-p [tm2/m]	thet-y [tm2/m]	thet-z [tm2/m]	thet-yz [tm2/m]
	4.550		47.0	45.0	52.0	0.0	0.102	0.071	0.031	

SOFiSTiK AG - www.sofistik.de

Composite bridge 38+50+38, b=14.25m, 2x2HL1100R HISTAR460 , slab 0.30m C30/37

Cross section No. 652.3 = CS 20 - in-situ conc:C2

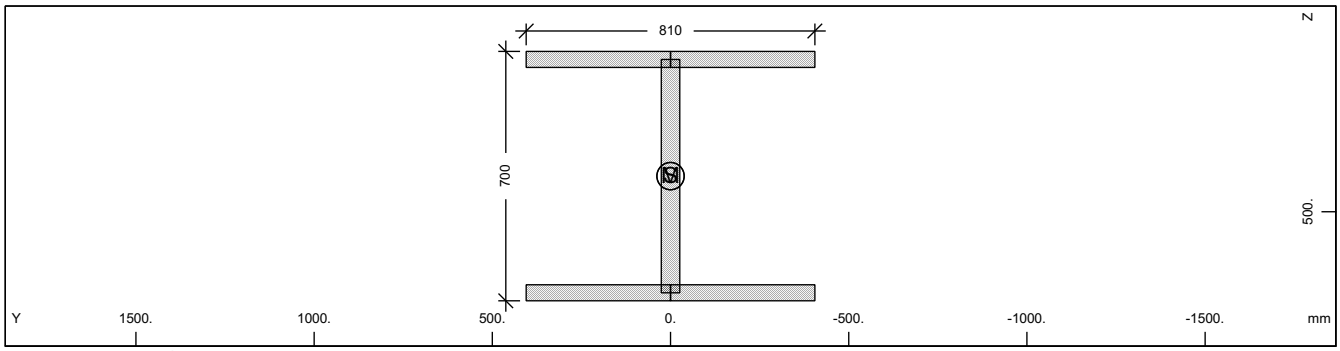

Cross section No. 652

Static properties of cross section

Mat NoR	A[cm2] It[cm4]	Ay/Az/Ayz [cm2]	Iy/Iz/Iyz [cm4]	ys/zs [mm]	modules [N/mm2]	gam [kN/m]
1	1069.60	607.50	903669.7	0.0	210000	8.40
	6270.0	288.17	398580.9	400.0	80769	

Additional static properties of cross section

Alfa-T [1/°K]	ymin ymax [mm]	zmin zmax [mm]	hymin hzmin [mm]	AK AB [cm2]	MB	Tau-T Tau-B [1/m3]	Tau-Vy Tau-Vz [1/m2]
1.2E-05	-405.0	-350.0		5.910E+02		6.508E+02	2.058E+01
	405.0	350.0				1.189E+02	3.134E+01

Section values for warping

Wmin[cm2]	Wmax[cm2]	CM[cm6]	CMS[cm4]	ASwyy[cm6]	ASwzz[cm6]	ry[mm]	rz[mm]
-1326.38	1326.38	427502762.	651581.6	-3.01	-6.82	0.0	0.0

Design values of cross section

Mat NoR	A[cm2] It[cm4]	Ay/Az/Ayz [cm2]	Iy/Iz/Iyz [cm4]	ys/zs [mm]	modules [N/mm2]	gam [kN/m]
1	1069.60	607.50	903669.7	0.0	182609	8.40
	6270.0	288.17	398580.9	400.0	70234	

Design forces and moments
(C/E = characteristic plastic/elastic, D=plast.Design, F=elast. Design)

	N[kN]	Vy[kN]	Vz[kN]	Mt[kNm]	My[kNm]	Mz[kNm]	y[mm]	z[mm]	BUCK
C	35831.6	14099.76	6587.62	488.52	9866.45	5093.69	0.0	400.0	c d
C	0.0				0.00	0.00	0.0	0.0	COMB
E	35831.6	9399.84	6171.79	297.21	8649.41	3296.90	0.0	400.0	
D	31157.9	12260.66	5728.37	424.80	8579.52	4429.29	0.0	400.0	
D	0.0				0.00	0.00	0.0	0.0	COMB
F	31157.9	8173.78	5366.77	258.44	7521.22	2866.87	0.0	400.0	

Additional Design Data

M	periphery-O/-I [m2/m] [m2/m]	deff [mm]	t-min [mm]	t-max [mm]	SMP [o/o]	thet-p [tm2/m]	thet-y [tm2/m]	thet-z [tm2/m]	thet-yz [tm2/m]
	4.550	47.0	45.0	52.0	0.0	0.102	0.071	0.031	

SOFiSTiK AG - www.sofistik.de

Composite bridge 38+50+38, b=14.25m, 2x2HL1100R HISTAR460 , slab 0.30m C30/37

Cross section No. 652.4 = CS 21 - reinf active:C2

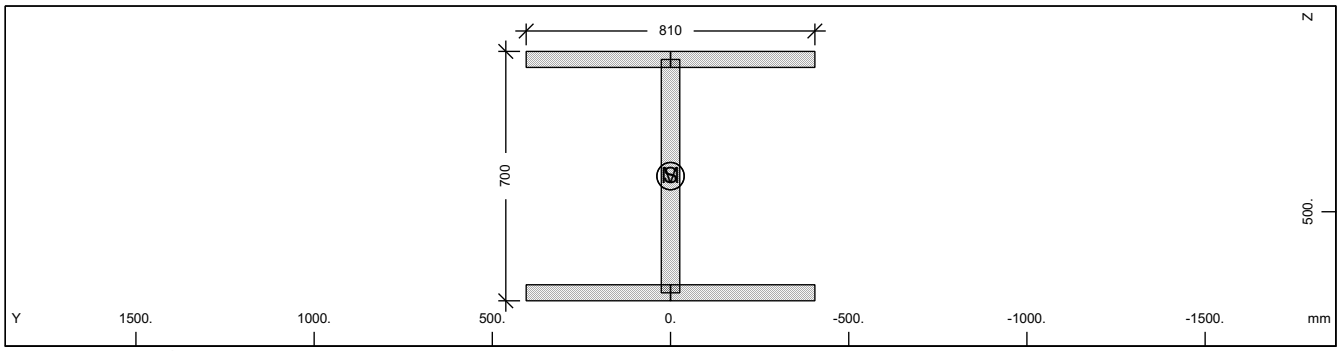

Cross section No. 652

Static properties of cross section

Mat NoR	A[cm2] It[cm4]	Ay/Az/Ayz [cm2]	Iy/Iz/Iyz [cm4]	ys/zs [mm]	modules [N/mm2]	gam [kN/m]
1	1069.60	607.50	903669.7	0.0	210000	8.40
	6270.0	288.17	398580.9	400.0	80769	

Additional static properties of cross section

Alfa-T [1/°K]	ymin ymax [mm]	zmin zmax [mm]	hymin hzmin [mm]	AK AB [cm2]	MB	Tau-T Tau-B [1/m3]	Tau-Vy Tau-Vz [1/m2]
1.2E-05	-405.0	-350.0		5.910E+02		6.508E+02	2.058E+01
	405.0	350.0				1.189E+02	3.134E+01

Section values for warping

Wmin[cm2]	Wmax[cm2]	CM[cm6]	CMS[cm4]	ASwyy[cm6]	ASwzz[cm6]	ry[mm]	rz[mm]
-1326.38	1326.38	427502762.	651581.6	-3.01	-6.82	0.0	0.0

Design values of cross section

Mat NoR	A[cm2] It[cm4]	Ay/Az/Ayz [cm2]	Iy/Iz/Iyz [cm4]	ys/zs [mm]	modules [N/mm2]	gam [kN/m]
1	1069.60	607.50	903669.7	0.0	182609	8.40
	6270.0	288.17	398580.9	400.0	70234	

Design forces and moments
(C/E = characteristic plastic/elastic, D=plast.Design, F=elast. Design)

	N[kN]	Vy[kN]	Vz[kN]	Mt[kNm]	My[kNm]	Mz[kNm]	y[mm]	z[mm]	BUCK
C	35831.6	14099.76	6587.62	488.52	9866.45	5093.69	0.0	400.0	c d
C	0.0				0.00	0.00	0.0	0.0	COMB
E	35831.6	9399.84	6171.79	297.21	8649.41	3296.90	0.0	400.0	
D	31157.9	12260.66	5728.37	424.80	8579.52	4429.29	0.0	400.0	
D	0.0				0.00	0.00	0.0	0.0	COMB
F	31157.9	8173.78	5366.77	258.44	7521.22	2866.87	0.0	400.0	

Additional Design Data

M	periphery-O/-I [m2/m] [m2/m]	deff [mm]	t-min [mm]	t-max [mm]	SMP [o/o]	thet-p [tm2/m]	thet-y [tm2/m]	thet-z [tm2/m]	thet-yz [tm2/m]
	4.550	47.0	45.0	52.0	0.0	0.102	0.071	0.031	

SOFiSTiK AG - www.sofistik.de

Composite bridge 38+50+38, b=14.25m, 2x2HL1100R HISTAR460 , slab 0.30m C30/37

Cross section No. 652.5 = CS 30 - in-situ conc:C3

Cross section No. 653 - VFT

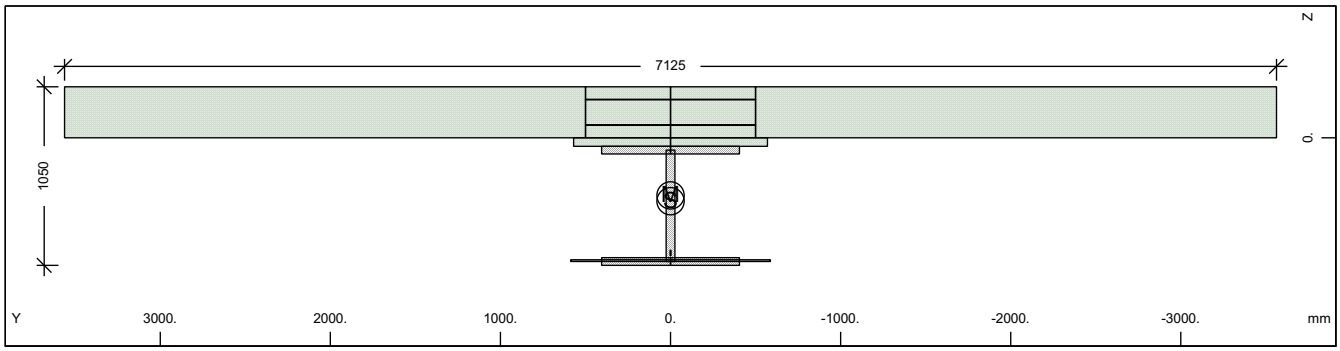

Cross section No. 653 - VFT

Static properties of cross section

Mat NoR	A[cm2] It[cm4]	Ay/Az/Ayz [cm2]	Iy/Iz/Iyz [cm4]	ys/zs [mm]	y/z-sc [mm]	modules [N/mm2]	gam [kN/m]
1	1135.99	645.43	1086280.2	0.0	0.0	210000	63.55
	6270.0	327.35	448426.4	372.9	338.9	80769	

Additional static properties of cross section

Alfa-T [1/°K]	ymin ymax [mm]	zmin zmax [mm]	hymin hzmin [mm]	AK AB [cm2]	MB	Tau-T Tau-B [1/m3]	Tau-Vy Tau-Vz [1/m2]
1.2E-05	-3562.5	-672.9		9.935E+01		1.715E+02	2.655E+01
	3562.5	377.1		2.206E+04		1.189E+02	2.907E+01

Section values for warping

Wmin[cm2]	Wmax[cm2]	CM[cm6]	CMS[cm4]	ASwyy[cm6]	ASwzz[cm6]	ry[mm]	rz[mm]
-17415.78	17415.78	564328746.	771743.0	0.60	1.46	0.0	40.8

Partial cross sections

Mat NoR	A[cm2] It[cm4]	Ay/Az/Ayz [cm2]	Iy/Iz/Iyz [cm4]	ys/zs [mm]	modules [N/mm2]	gam [kN/m]
1	1069.60	541.76	903669.7	0.0	210000	8.40
	7990.7	313.84	398580.9	400.0	80769	
25	117.40		9.8	0.0	10667	0.29
	539368.1	0.00	0.0	722.5	4444	
210	0.64	0.00	0.0	0.0	200000	0.00
	2.2	0.00	0.0	677.5	76923	
31	21945.00	81034377.	170028.4	0.0	0	54.86
	6417251.4	191356.89	904880243.	-145.5	0	
300	62.80	108.42	3532.5	0.0	200000	0.00
	2.1	14.01	52333.3	-150.0	76923	

Design values of cross section

Mat NoR	A[cm2] It[cm4]	Ay/Az/Ayz [cm2]	Iy/Iz/Iyz [cm4]	ys/zs [mm]	modules [N/mm2]	gam [kN/m]
1	1134.59	645.34	1084577.3	0.0	182609	63.55
	6270.0	327.18	448425.4	372.5	70234	

Design forces and moments
(C/E = characteristic plastic/elastic, D=plast.Design, F=elast. Design)

	N[kN]	Vy[kN]	Vz[kN]	Mt[kNm]	My[kNm]	Mz[kNm]	y[mm]	z[mm]	BUCK
C	39003.8	52140.45	36043.66	99179.80	22340.65	60206.52	279.8	-131.	c c
C	-68069.4				45787.38	0.00	0.0	372.9	COMB
C	-33093.6				0.00	63285.64	0.0	0.0	COMB
C	262309.1	52140.45	36043.66	99179.79	-11470.1	-60108.0	-280.	319.4	
C	1882.2				-11539.4	0.00	0.0	372.9	COMB
C	-33093.6				0.00	-63285.6	0.0	0.0	COMB
E	38055.5	10575.36	6652.62	96.23	9538.58	3709.21	0.0	372.9	

SOFiSTiK AG - www.sofistik.de

Composite bridge 38+50+38, b=14.25m, 2x2HL1100R HISTAR460 , slab 0.30m C30/37

Design forces and moments
(C/E = characteristic plastic/elastic, D=plast.Design, F=elast. Design)

	N[kN]	Vy[kN]	Vz[kN]	Mt[kNm]	My[kNm]	Mz[kNm]	y[mm]	z[mm]	BUCK
E	-38055.5	10575.36	6652.62	96.23	-9538.58	-3709.21	0.0	372.9	
D	33916.3	37992.72	25995.66	66234.62	18630.17	42170.82	186.1	-81.2	
D	-45818.5				32864.53	0.00	0.0	372.9	COMB
D	-22062.4				0.00	43383.25	0.0	0.0	COMB
D	166958.9	37992.72	25995.66	66234.62	-9972.46	-42127.1	-186.	317.5	
D	1693.7				-10032.5	0.00	0.0	372.9	COMB
D	-22062.4				0.00	-43383.3	0.0	0.0	COMB
F	33091.7	9195.97	5784.89	64.15	8294.41	3225.40	0.0	372.9	
F	-33091.7	9195.97	5784.89	64.15	-8294.41	-3225.40	0.0	372.9	

Additional Design Data

M	periphery-O/-I [m2/m]	[m2/m]	deff [mm]	t-min [mm]	t-max [mm]	SMP [o/o]	thet-p [tm2/m]	thet-y [tm2/m]	thet-z [tm2/m]	thet-yz [tm2/m]
	25.104		9.1	3.1	300.0	0.0	22.964	0.310	22.653	
1	4.550		47.0	45.0	52.0	0.0	0.102	0.071	0.031	
25	0.020		1174.0			0.0	0.000	0.000		
**	0.004		32.0			0.0	0.000		0.000	
31	16.530		265.5	50.0	300.0	0.0	22.626	0.004	22.622	
**	4.000		3.1	3.1	3.1	0.0	0.000	0.000	0.000	

Cross section No. 653.1 = CS 1 - steel alone

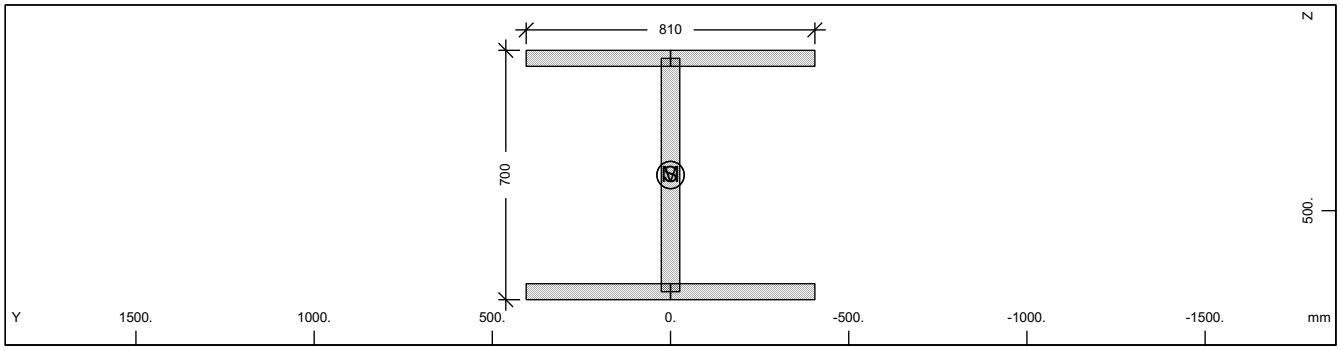

Cross section No. 653

Static properties of cross section

Mat NoR	A[cm2] It[cm4]	Ay/Az/Ayz [cm2]	Iy/Iz/Iyz [cm4]	ys/zs [mm]	modules [N/mm2]	gam [kN/m]
1	1069.60	607.50	903669.7	0.0	210000	8.40
	6270.0	288.17	398580.9	400.0	80769	

Additional static properties of cross section

Alfa-T [1/°K]	ymin ymax [mm]	zmin zmax [mm]	hymin hzmin [mm]	AK AB [cm2]	MB	Tau-T Tau-B [1/m3]	Tau-Vy Tau-Vz [1/m2]
1.2E-05	-405.0	-350.0		5.910E+02		6.508E+02	2.058E+01
	405.0	350.0				1.189E+02	3.134E+01

Section values for warping

Wmin[cm2]	Wmax[cm2]	CM[cm6]	CMS[cm4]	ASwyy[cm6]	ASwzz[cm6]	ry[mm]	rz[mm]
-1326.38	1326.38	427502762.	651581.6	-3.01	-6.82	0.0	0.0

Design values of cross section

Mat NoR	A[cm2] It[cm4]	Ay/Az/Ayz [cm2]	Iy/Iz/Iyz [cm4]	ys/zs [mm]	modules [N/mm2]	gam [kN/m]
1	1069.60	607.50	903669.7	0.0	182609	8.40
	6270.0	288.17	398580.9	400.0	70234	

SOFiSTiK AG - www.sofistik.de

Composite bridge 38+50+38, b=14.25m, 2x2HL1100R HISTAR460 , slab 0.30m C30/37

Design forces and moments
(C/E = characteristic plastic/elastic, D=plast.Design, F=elast. Design)

	N[kN]	Vy[kN]	Vz[kN]	Mt[kNm]	My[kNm]	Mz[kNm]	y[mm]	z[mm]	BUCK
C	35831.6	14099.76	6587.62	488.52	9866.45	5093.69	0.0	400.0	c d
C	0.0				0.00	0.00	0.0	0.0	COMB
E	35831.6	9399.84	6171.79	297.21	8649.41	3296.90	0.0	400.0	
D	31157.9	12260.66	5728.37	424.80	8579.52	4429.29	0.0	400.0	
D	0.0				0.00	0.00	0.0	0.0	COMB
F	31157.9	8173.78	5366.77	258.44	7521.22	2866.87	0.0	400.0	

Additional Design Data

M	periphery-O/-I [m2/m]	[m2/m]	deff [mm]	t-min [mm]	t-max [mm]	SMP [o/o]	thet-p [tm2/m]	thet-y [tm2/m]	thet-z [tm2/m]	thet-yz [tm2/m]
	4.550		47.0	45.0	52.0	0.0	0.102	0.071	0.031	

Cross section No. 653.2 = CS 10 - prefab. slab C1

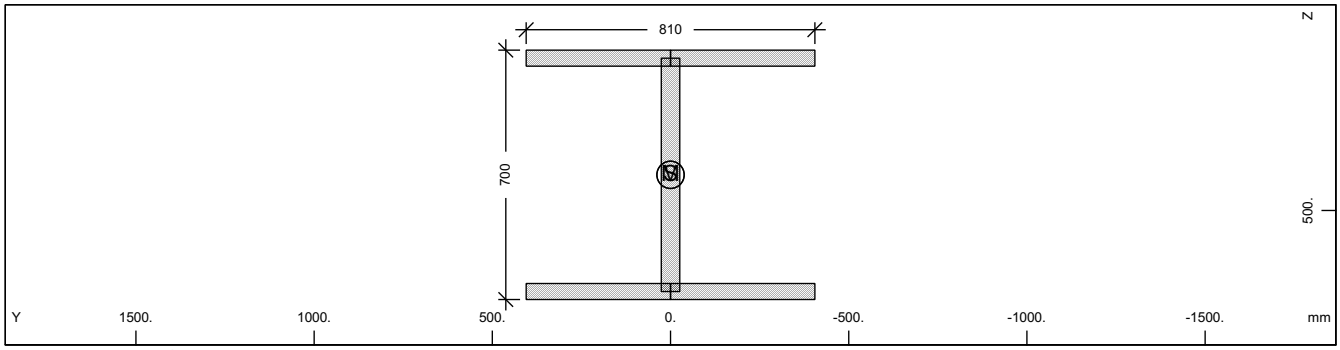

Cross section No. 653

Static properties of cross section

Mat NoR	A[cm2] It[cm4]	Ay/Az/Ayz [cm2]	Iy/Iz/Iyz [cm4]	ys/zs [mm]	modules [N/mm2]	gam [kN/m]
1	1069.60	607.50	903669.7	0.0	210000	8.40
	6270.0	288.17	398580.9	400.0	80769	

Additional static properties of cross section

Alfa-T [1/°K]	ymin ymax [mm]	zmin zmax [mm]	hymin hzmin [mm]	AK AB [cm2]	MB	Tau-T Tau-B [1/m3]	Tau-Vy Tau-Vz [1/m2]
1.2E-05	-405.0	-350.0		5.910E+02		6.508E+02	2.058E+01
	405.0	350.0				1.189E+02	3.134E+01

Section values for warping

Wmin[cm2]	Wmax[cm2]	CM[cm6]	CMS[cm4]	ASwyy[cm6]	ASwzz[cm6]	ry[mm]	rz[mm]
-1326.38	1326.38	427502762.	651581.6	-3.01	-6.82	0.0	0.0

Design values of cross section

Mat NoR	A[cm2] It[cm4]	Ay/Az/Ayz [cm2]	Iy/Iz/Iyz [cm4]	ys/zs [mm]	modules [N/mm2]	gam [kN/m]
1	1069.60	607.50	903669.7	0.0	182609	8.40
	6270.0	288.17	398580.9	400.0	70234	

Design forces and moments
(C/E = characteristic plastic/elastic, D=plast.Design, F=elast. Design)

	N[kN]	Vy[kN]	Vz[kN]	Mt[kNm]	My[kNm]	Mz[kNm]	y[mm]	z[mm]	BUCK
C	35831.6	14099.76	6587.62	488.52	9866.45	5093.69	0.0	400.0	c d
C	0.0				0.00	0.00	0.0	0.0	COMB
E	35831.6	9399.84	6171.79	297.21	8649.41	3296.90	0.0	400.0	
D	31157.9	12260.66	5728.37	424.80	8579.52	4429.29	0.0	400.0	
D	0.0				0.00	0.00	0.0	0.0	COMB
F	31157.9	8173.78	5366.77	258.44	7521.22	2866.87	0.0	400.0	

SOFiSTiK AG - www.sofistik.de

Composite bridge 38+50+38, b=14.25m, 2x2HL1100R HISTAR460 , slab 0.30m C30/37

Additional Design Data

M	periphery-O/-I [m2/m]	[m2/m]	deff [mm]	t-min [mm]	t-max [mm]	SMP [o/o]	thet-p [tm2/m]	thet-y [tm2/m]	thet-z [tm2/m]	thet-yz [tm2/m]
	4.550		47.0	45.0	52.0	0.0	0.102	0.071	0.031	

Cross section No. 653.3 = CS 20 - in-situ conc:C2

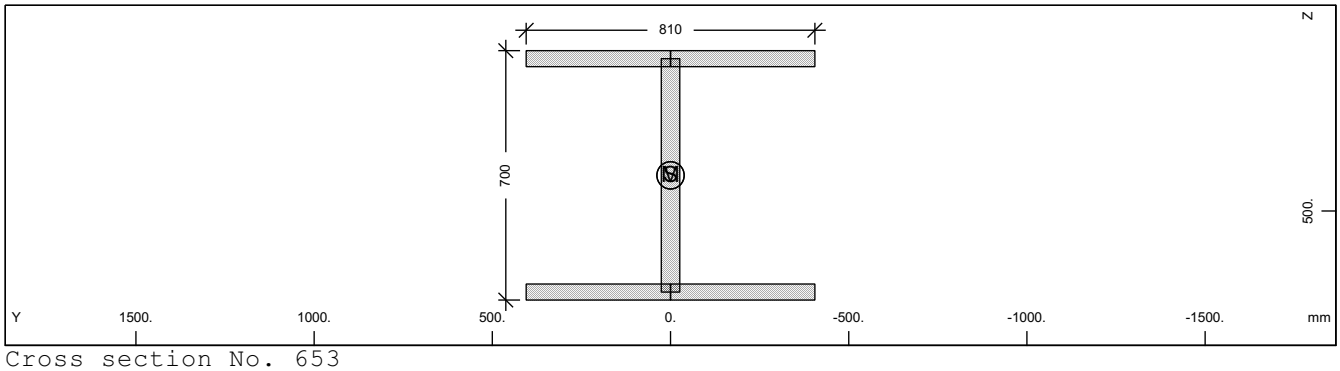

Cross section No. 653

Static properties of cross section

Mat NoR	A[cm2] It[cm4]	Ay/Az/Ayz [cm2]	Iy/Iz/Iyz [cm4]	ys/zs [mm]	modules [N/mm2]	gam [kN/m]
1	1069.60	607.50	903669.7	0.0	210000	8.40
	6270.0	288.17	398580.9	400.0	80769	

Additional static properties of cross section

Alfa-T [1/°K]	ymin ymax [mm]	zmin zmax [mm]	hymin hzmin [mm]	AK AB [cm2]	MB	Tau-T Tau-B [1/m3]	Tau-Vy Tau-Vz [1/m2]
1.2E-05	-405.0	-350.0		5.910E+02		6.508E+02	2.058E+01
	405.0	350.0				1.189E+02	3.134E+01

Section values for warping

Wmin[cm2]	Wmax[cm2]	CM[cm6]	CMS[cm4]	ASwyy[cm6]	ASwzz[cm6]	ry[mm]	rz[mm]
-1326.38	1326.38	427502762.	651581.6	-3.01	-6.82	0.0	0.0

Design values of cross section

Mat NoR	A[cm2] It[cm4]	Ay/Az/Ayz [cm2]	Iy/Iz/Iyz [cm4]	ys/zs [mm]	modules [N/mm2]	gam [kN/m]
1	1069.60	607.50	903669.7	0.0	182609	8.40
	6270.0	288.17	398580.9	400.0	70234	

Design forces and moments
(C/E = characteristic plastic/elastic, D=plast.Design, F=elast. Design)

	N[kN]	Vy[kN]	Vz[kN]	Mt[kNm]	My[kNm]	Mz[kNm]	y[mm]	z[mm]	BUCK
C	35831.6	14099.76	6587.62	488.52	9866.45	5093.69	0.0	400.0	c d
C	0.0				0.00	0.00	0.0	0.0	COMB
E	35831.6	9399.84	6171.79	297.21	8649.41	3296.90	0.0	400.0	
D	31157.9	12260.66	5728.37	424.80	8579.52	4429.29	0.0	400.0	
D	0.0				0.00	0.00	0.0	0.0	COMB
F	31157.9	8173.78	5366.77	258.44	7521.22	2866.87	0.0	400.0	

Additional Design Data

M	periphery-O/-I [m2/m]	[m2/m]	deff [mm]	t-min [mm]	t-max [mm]	SMP [o/o]	thet-p [tm2/m]	thet-y [tm2/m]	thet-z [tm2/m]	thet-yz [tm2/m]
	4.550		47.0	45.0	52.0	0.0	0.102	0.071	0.031	

SOFiSTiK AG - www.sofistik.de

Composite bridge 38+50+38, b=14.25m, 2x2HL1100R HISTAR460 , slab 0.30m C30/37

Cross section No. 653.4 = CS 21 - reinf active:C2

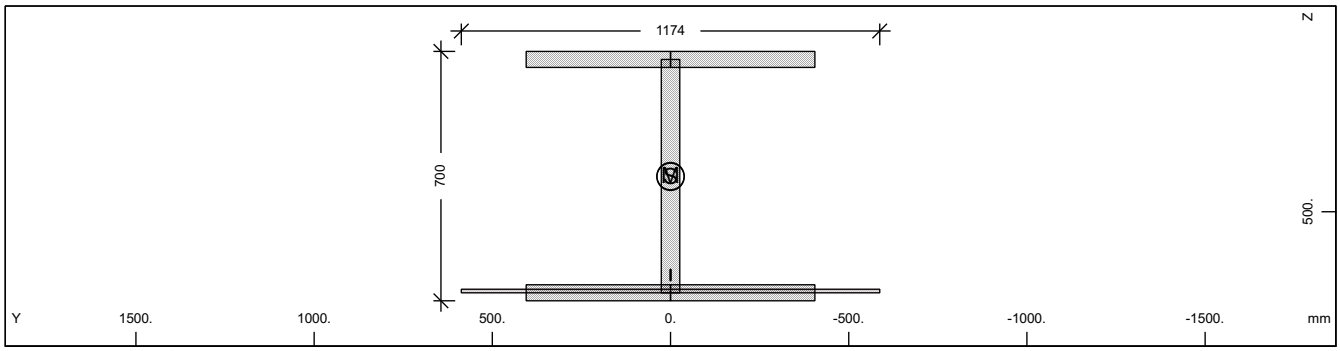

Cross section No. 653

Static properties of cross section

Mat NoR	A[cm2] It[cm4]	Ay/Az/Ayz [cm2]	Iy/Iz/Iyz [cm4]	ys/zs [mm]	modules [N/mm2]	gam [kN/m]
1	1076.18	607.50	910303.2	0.0	210000	8.69
	6270.0	288.72	398580.9	401.9	80769	

Additional static properties of cross section

Alfa-T [1/°K]	ymin ymax [mm]	zmin zmax [mm]	hymin hzmin [mm]	AK AB [cm2]	MB	Tau-T Tau-B [1/m3]	Tau-Vy Tau-Vz [1/m2]
1.2E-05	-587.0	-351.9		9.934E+01		1.715E+02	2.058E+01
	587.0	348.1		1.174E+02		1.189E+02	3.133E+01

Section values for warping

Wmin[cm2]	Wmax[cm2]	CM[cm6]	CMS[cm4]	ASwyy[cm6]	ASwzz[cm6]	ry[mm]	rz[mm]
-1326.38	1326.38	427502820.	651581.7	-1.15	-2.63	0.0	-0.5

Partial cross sections

Mat NoR	A[cm2] It[cm4]	Ay/Az/Ayz [cm2]	Iy/Iz/Iyz [cm4]	ys/zs [mm]	modules [N/mm2]	gam [kN/m]
1	1069.60	607.50	903669.7	0.0	210000	8.40
	7990.7	288.72	398580.9	400.0	80769	
25	117.40		9.8	0.0	10667	0.29
	539368.1	0.00	0.0	722.5	4444	
210	0.64	0.00	0.0	0.0	200000	0.00
	2.2	0.00	0.0	677.5	76923	

Design values of cross section

Mat NoR	A[cm2] It[cm4]	Ay/Az/Ayz [cm2]	Iy/Iz/Iyz [cm4]	ys/zs [mm]	modules [N/mm2]	gam [kN/m]
1	1074.78	607.50	908871.5	0.0	182609	8.69
	6270.0	288.72	398580.9	401.5	70234	

Design forces and moments
(C/E = characteristic plastic/elastic, D=plast.Design, F=elast. Design)

	N[kN]	Vy[kN]	Vz[kN]	Mt[kNm]	My[kNm]	Mz[kNm]	y[mm]	z[mm]	BUCK
C	35863.8	14118.33	7243.22	609.92	9999.89	5145.57	0.3	398.7	c c
C	-115.5				9998.92	0.00	0.0	401.9	COMB
C	-176.1				0.00	5145.63	0.0	0.0	COMB
C	-36216.0	14118.33	7243.22	609.92	-9887.60	-5145.48	-0.3	408.7	
C	-236.7				-9886.02	0.00	0.0	401.9	COMB
C	-176.1				0.00	-5145.63	0.0	0.0	COMB
E	36051.9	9399.84	6173.45	96.22	8664.75	3296.90	0.0	401.9	
E	-36051.9	9399.84	6173.45	96.22	-8664.75	-3296.90	0.0	401.9	
D	31185.9	12276.81	6259.15	507.29	8670.18	4463.89	0.2	399.2	
D	-84.3				8669.65	0.00	0.0	401.9	COMB
D	-117.4				0.00	4463.97	0.0	0.0	COMB
D	-31420.7	12276.81	6259.15	507.29	-8595.17	-4463.85	-0.2	406.9	
D	-150.5				-8594.38	0.00	0.0	401.9	COMB
D	-117.4				0.00	-4463.97	0.0	0.0	COMB

SOFiSTiK AG - www.sofistik.de

Composite bridge 38+50+38, b=14.25m, 2x2HL1100R HISTAR460 , slab 0.30m C30/37

Design forces and moments
(C/E = characteristic plastic/elastic, D=plast.Design, F=elast. Design)

	N[kN]	Vy[kN]	Vz[kN]	Mt[kNm]	My[kNm]	Mz[kNm]	y[mm]	z[mm]	BUCK
F	31349.5	8173.78	5368.22	64.15	7534.57	2866.87	0.0	401.9	
F	-31349.5	8173.78	5368.22	64.15	-7534.57	-2866.87	0.0	401.9	

Additional Design Data

M	periphery-O/-I [m2/m]	[m2/m]	deff [mm]	t-min [mm]	t-max [mm]	SMP [o/o]	thet-p [tm2/m]	thet-y [tm2/m]	thet-z [tm2/m]	thet-yz [tm2/m]
	4.574		47.1	32.0	52.0	0.0	0.105	0.074	0.031	
1	4.550		47.0	45.0	52.0	0.0	0.102	0.071	0.031	
25	0.020		1174.0			0.0	0.000	0.000		
**	0.004		32.0			0.0	0.000		0.000	

Cross section No. 653.5 = CS 30 - in-situ conc:C3

Cross section No. 751 - VFT

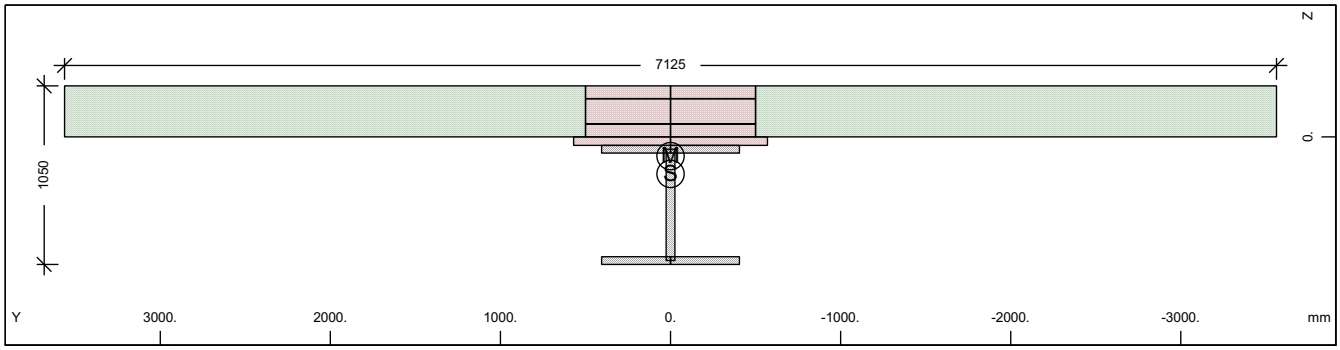

Cross section No. 751 - VFT

Static properties of cross section

Mat NoR	A[cm2] It[cm4]	Ay/Az/Ayz [cm2]	Iy/Iz/Iyz [cm4]	ys/zs [mm]	y/z-sc [mm]	modules [N/mm2]	gam [kN/m]
1	1642.18	1074.80	1946674.3	0.0	0.0	210000	63.26
	6270.0	462.67	897984.0	217.7	112.9	80769	

Additional static properties of cross section

Alfa-T [1/°K]	ymin ymax [mm]	zmin zmax [mm]	hymin hzmin [mm]	AK AB [cm2]	MB	Tau-T Tau-B [1/m3]	Tau-Vy Tau-Vz [1/m2]
1.2E-05	-3562.5	-517.7		2.115E+03		3.225E+01	1.326E+01
	3562.5	532.3		2.195E+04		1.189E+02	2.503E+01

Section values for warping

Wmin[cm2]	Wmax[cm2]	CM[cm6]	CMS[cm4]	ASwyy[cm6]	ASwzz[cm6]	ry[mm]	rz[mm]
-9367.06	9367.061042624125.		1423880.6	2.35	5.10	0.0	321.1

Partial cross sections

Mat NoR	A[cm2] It[cm4]	Ay/Az/Ayz [cm2]	Iy/Iz/Iyz [cm4]	ys/zs [mm]	modules [N/mm2]	gam [kN/m]
1	1069.60	374.63	903669.7	0.0	210000	8.40
	7990.7	428.98	398580.9	400.0	80769	
30	3570.00	4030.92	146691.2	0.0	32837	8.93
	904750.1	193.18	3117310.1	-122.1	13682	
31	18375.00	41481168.	0.0	0.0	0	45.94
	5512501.0	37388.97901762872.		-150.0	0	
300	15.07	17.99	847.8	0.0	200000	0.00
	0.0	1.01	12560.0	-150.0	76923	

SOFiSTiK AG - www.sofistik.de

Composite bridge 38+50+38, b=14.25m, 2x2HL1100R HISTAR460 , slab 0.30m C30/37

Design values of cross section

Mat NoR	A[cm2] It[cm4]	Ay/Az/Ayz [cm2]	Iy/Iz/Iyz [cm4]	ys/zs [mm]	modules [N/mm2]	gam [kN/m]
1	1511.92	915.42	1777982.7	0.0	182609	63.26
	6270.0	455.03	784247.7	247.0	70234	

Design forces and moments
(C/E = characteristic plastic/elastic, D=plast.Design, F=elast. Design)

	N[kN]	Vy[kN]	Vz[kN]	Mt[kNm]	My[kNm]	Mz[kNm]	y[mm]	z[mm]	BUCK
C	36585.2	50744.10	35388.07	99055.71	22135.36	59290.14	297.4	-132.	c d
C	-60238.3				34632.55	0.00	0.0	217.7	COMB
C	-32917.5				0.00	62637.10	0.0	0.0	COMB
C	-102420.	50744.10	35388.07	99055.72	-10272.8	-59290.1	-297.	378.2	
C	-5596.7				-10722.3	0.00	0.0	217.7	COMB
C	-32917.5				0.00	-62637.1	0.0	0.0	COMB
E	55012.9	5833.03	7727.07	523.56	7213.94	3022.57	0.0	217.7	
E	-31506.7	5833.03	7727.07	523.56	-12252.0	-3022.57	0.0	217.7	
D	31813.2	36778.50	25464.89	66149.80	18453.32	41510.95	197.9	-81.3	
D	-39023.3				25263.91	0.00	0.0	217.7	COMB
D	-21945.0				0.00	42829.79	0.0	0.0	COMB
D	-75703.2	36778.50	25464.89	66149.80	-8932.85	-41511.0	-198.	378.3	
D	-4866.7				-9323.74	0.00	0.0	217.7	COMB
D	-21945.0				0.00	-42829.8	0.0	0.0	COMB
F	47837.3	3888.69	6719.19	349.04	4809.30	2015.05	0.0	217.7	
F	-21004.4	3888.69	6719.19	349.04	-10653.9	-2015.05	0.0	217.7	

Additional Design Data

M	periphery-O/-I [m2/m]	[m2/m]	deff [mm]	t-min [mm]	t-max [mm]	SMP [o/o]	thet-p [tm2/m]	thet-y [tm2/m]	thet-z [tm2/m]	thet-yz [tm2/m]
	25.080		13.1	0.8	300.0	0.0	22.945	0.292	22.653	
1	4.550		47.0	45.0	52.0	0.0	0.102	0.071	0.031	
30	4.280		600.0	50.0	300.0	0.0	0.082	0.004	0.078	
31	12.250		300.0	300.0	300.0	0.0	22.544		22.544	
**	4.000		0.8	0.8	0.8	0.0	0.000	0.000	0.000	

Cross section No. 751.1 = CS 1 - steel alone

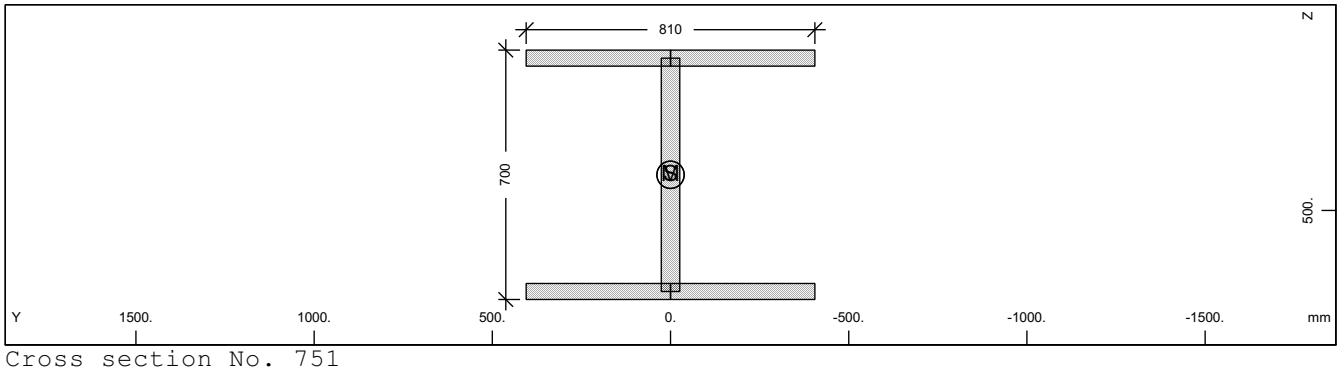

Cross section No. 751

Static properties of cross section

Mat NoR	A[cm2] It[cm4]	Ay/Az/Ayz [cm2]	Iy/Iz/Iyz [cm4]	ys/zs [mm]	modules [N/mm2]	gam [kN/m]
1	1069.60	607.50	903669.7	0.0	210000	8.40
	6270.0	288.17	398580.9	400.0	80769	

Additional static properties of cross section

Alfa-T [1/°K]	ymin ymax [mm]	zmin zmax [mm]	hymin hzmin [mm]	AK AB [cm2]	MB	Tau-T Tau-B [1/m3]	Tau-Vy Tau-Vz [1/m2]
1.2E-05	-405.0	-350.0		5.910E+02		6.508E+02	2.058E+01
	405.0	350.0				1.189E+02	3.134E+01

SOFiSTiK AG - www.sofistik.de

Composite bridge 38+50+38, b=14.25m, 2x2HL1100R HISTAR460 , slab 0.30m C30/37

Section values for warping

Wmin[cm2]	Wmax[cm2]	CM[cm6]	CMS[cm4]	ASwyy[cm6]	ASwzz[cm6]	ry[mm]	rz[mm]
-1326.38	1326.38	427502762.	651581.6	-3.01	-6.82	0.0	0.0

Design values of cross section

Mat NoR	A[cm2] It[cm4]	Ay/Az/Ayz [cm2]	Iy/Iz/Iyz [cm4]	ys/zs [mm]	modules [N/mm2]	gam [kN/m]
1	1069.60	607.50	903669.7	0.0	182609	8.40
	6270.0	288.17	398580.9	400.0	70234	

Design forces and moments
(C/E = characteristic plastic/elastic, D=plast.Design, F=elast. Design)

	N[kN]	Vy[kN]	Vz[kN]	Mt[kNm]	My[kNm]	Mz[kNm]	y[mm]	z[mm]	BUCK
C	35831.6	14099.76	6587.62	488.52	9866.45	5093.69	0.0	400.0	c d
C	0.0				0.00	0.00	0.0	0.0	COMB
E	35831.6	9399.84	6171.79	297.21	8649.41	3296.90	0.0	400.0	
D	31157.9	12260.66	5728.37	424.80	8579.52	4429.29	0.0	400.0	
D	0.0				0.00	0.00	0.0	0.0	COMB
F	31157.9	8173.78	5366.77	258.44	7521.22	2866.87	0.0	400.0	

Additional Design Data

M	periphery-O/-I [m2/m]	[m2/m]	deff [mm]	t-min [mm]	t-max [mm]	SMP [o/o]	thet-p [tm2/m]	thet-y [tm2/m]	thet-z [tm2/m]	thet-yz [tm2/m]
	4.550		47.0	45.0	52.0	0.0	0.102	0.071	0.031	

Cross section No. 751.2 = CS 10 - prefab. slab C1

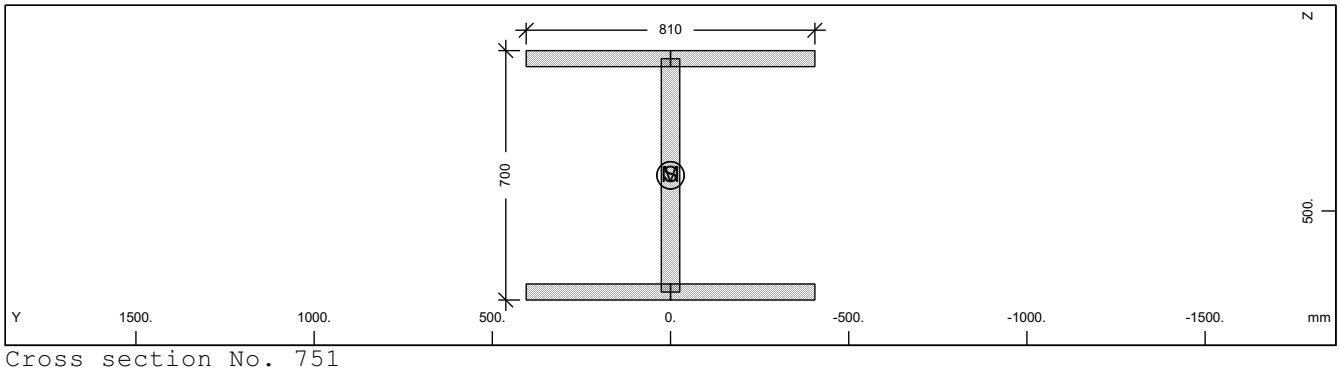

Cross section No. 751

Static properties of cross section

Mat NoR	A[cm2] It[cm4]	Ay/Az/Ayz [cm2]	Iy/Iz/Iyz [cm4]	ys/zs [mm]	modules [N/mm2]	gam [kN/m]
1	1069.60	607.50	903669.7	0.0	210000	8.40
	6270.0	288.17	398580.9	400.0	80769	

Additional static properties of cross section

Alfa-T [1/°K]	ymin ymax [mm]	zmin zmax [mm]	hymin hzmin [mm]	AK AB [cm2]	MB	Tau-T Tau-B [1/m3]	Tau-Vy Tau-Vz [1/m2]
1.2E-05	-405.0	-350.0		5.910E+02		6.508E+02	2.058E+01
	405.0	350.0				1.189E+02	3.134E+01

Section values for warping

Wmin[cm2]	Wmax[cm2]	CM[cm6]	CMS[cm4]	ASwyy[cm6]	ASwzz[cm6]	ry[mm]	rz[mm]
-1326.38	1326.38	427502762.	651581.6	-3.01	-6.82	0.0	0.0

Design values of cross section

Mat NoR	A[cm2] It[cm4]	Ay/Az/Ayz [cm2]	Iy/Iz/Iyz [cm4]	ys/zs [mm]	modules [N/mm2]	gam [kN/m]
1	1069.60	607.50	903669.7	0.0	182609	8.40
	6270.0	288.17	398580.9	400.0	70234	

SOFiSTiK AG - www.sofistik.de

Composite bridge 38+50+38, b=14.25m, 2x2HL1100R HISTAR460 , slab 0.30m C30/37

Design forces and moments
(C/E = characteristic plastic/elastic, D=plast.Design, F=elast. Design)

	N[kN]	Vy[kN]	Vz[kN]	Mt[kNm]	My[kNm]	Mz[kNm]	y[mm]	z[mm]	BUCK
C	35831.6	14099.76	6587.62	488.52	9866.45	5093.69	0.0	400.0	c d
C	0.0				0.00	0.00	0.0	0.0	COMB
E	35831.6	9399.84	6171.79	297.21	8649.41	3296.90	0.0	400.0	
D	31157.9	12260.66	5728.37	424.80	8579.52	4429.29	0.0	400.0	
D	0.0				0.00	0.00	0.0	0.0	COMB
F	31157.9	8173.78	5366.77	258.44	7521.22	2866.87	0.0	400.0	

Additional Design Data

M	periphery-O/-I [m2/m]	[m2/m]	deff [mm]	t-min [mm]	t-max [mm]	SMP [o/o]	thet-p [tm2/m]	thet-y [tm2/m]	thet-z [tm2/m]	thet-yz [tm2/m]
	4.550		47.0	45.0	52.0	0.0	0.102	0.071	0.031	

Cross section No. 751.3 = CS 20 - in-situ conc:C2

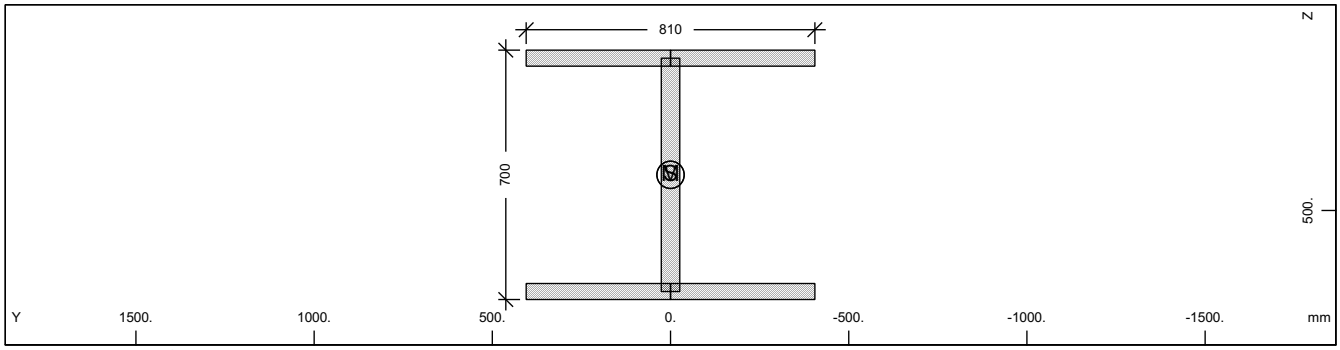

Cross section No. 751

Static properties of cross section

Mat NoR	A[cm2] It[cm4]	Ay/Az/Ayz [cm2]	Iy/Iz/Iyz [cm4]	ys/zs [mm]	modules [N/mm2]	gam [kN/m]
1	1069.60	607.50	903669.7	0.0	210000	8.40
	6270.0	288.17	398580.9	400.0	80769	

Additional static properties of cross section

Alfa-T [1/°K]	ymin ymax [mm]	zmin zmax [mm]	hymin hzmin [mm]	AK AB [cm2]	MB	Tau-T Tau-B [1/m3]	Tau-Vy Tau-Vz [1/m2]
1.2E-05	-405.0	-350.0		5.910E+02		6.508E+02	2.058E+01
	405.0	350.0				1.189E+02	3.134E+01

Section values for warping

Wmin[cm2]	Wmax[cm2]	CM[cm6]	CMS[cm4]	ASwyy[cm6]	ASwzz[cm6]	ry[mm]	rz[mm]
-1326.38	1326.38	427502762.	651581.6	-3.01	-6.82	0.0	0.0

Design values of cross section

Mat NoR	A[cm2] It[cm4]	Ay/Az/Ayz [cm2]	Iy/Iz/Iyz [cm4]	ys/zs [mm]	modules [N/mm2]	gam [kN/m]
1	1069.60	607.50	903669.7	0.0	182609	8.40
	6270.0	288.17	398580.9	400.0	70234	

Design forces and moments
(C/E = characteristic plastic/elastic, D=plast.Design, F=elast. Design)

	N[kN]	Vy[kN]	Vz[kN]	Mt[kNm]	My[kNm]	Mz[kNm]	y[mm]	z[mm]	BUCK
C	35831.6	14099.76	6587.62	488.52	9866.45	5093.69	0.0	400.0	c d
C	0.0				0.00	0.00	0.0	0.0	COMB
E	35831.6	9399.84	6171.79	297.21	8649.41	3296.90	0.0	400.0	
D	31157.9	12260.66	5728.37	424.80	8579.52	4429.29	0.0	400.0	
D	0.0				0.00	0.00	0.0	0.0	COMB
F	31157.9	8173.78	5366.77	258.44	7521.22	2866.87	0.0	400.0	

SOFiSTiK AG - www.sofistik.de

Composite bridge 38+50+38, b=14.25m, 2x2HL1100R HISTAR460 , slab 0.30m C30/37

Additional Design Data

M	periphery-O/-I [m2/m]	[m2/m]	deff [mm]	t-min [mm]	t-max [mm]	SMP [o/o]	thet-p [tm2/m]	thet-y [tm2/m]	thet-z [tm2/m]	thet-yz [tm2/m]
	4.550		47.0	45.0	52.0	0.0	0.102	0.071	0.031	

Cross section No. 751.4 = CS 21 - reinf active:C2

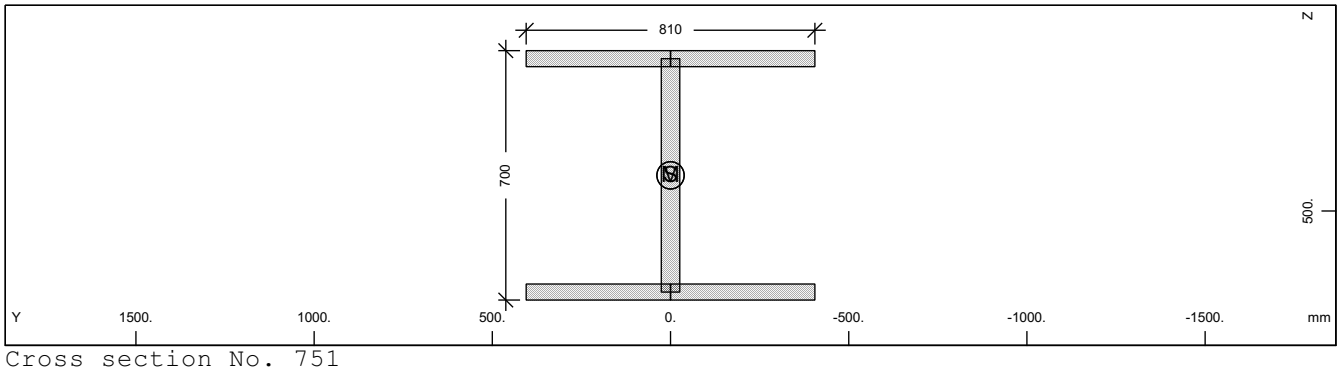

Cross section No. 751

Static properties of cross section

Mat NoR	A[cm2] It[cm4]	Ay/Az/Ayz [cm2]	Iy/Iz/Iyz [cm4]	ys/zs [mm]	modules [N/mm2]	gam [kN/m]
1	1069.60	607.50	903669.7	0.0	210000	8.40
	6270.0	288.17	398580.9	400.0	80769	

Additional static properties of cross section

Alfa-T [1/°K]	ymin ymax [mm]	zmin zmax [mm]	hymin hzmin [mm]	AK AB [cm2]	MB	Tau-T Tau-B [1/m3]	Tau-Vy Tau-Vz [1/m2]
1.2E-05	-405.0	-350.0		5.910E+02		6.508E+02	2.058E+01
	405.0	350.0				1.189E+02	3.134E+01

Section values for warping

Wmin[cm2]	Wmax[cm2]	CM[cm6]	CMS[cm4]	ASwyy[cm6]	ASwzz[cm6]	ry[mm]	rz[mm]
-1326.38	1326.38	427502762.	651581.6	-3.01	-6.82	0.0	0.0

Design values of cross section

Mat NoR	A[cm2] It[cm4]	Ay/Az/Ayz [cm2]	Iy/Iz/Iyz [cm4]	ys/zs [mm]	modules [N/mm2]	gam [kN/m]
1	1069.60	607.50	903669.7	0.0	182609	8.40
	6270.0	288.17	398580.9	400.0	70234	

Design forces and moments
(C/E = characteristic plastic/elastic, D=plast.Design, F=elast. Design)

	N[kN]	Vy[kN]	Vz[kN]	Mt[kNm]	My[kNm]	Mz[kNm]	y[mm]	z[mm]	BUCK
C	35831.6	14099.76	6587.62	488.52	9866.45	5093.69	0.0	400.0	c d
C	0.0				0.00	0.00	0.0	0.0	COMB
E	35831.6	9399.84	6171.79	297.21	8649.41	3296.90	0.0	400.0	
D	31157.9	12260.66	5728.37	424.80	8579.52	4429.29	0.0	400.0	
D	0.0				0.00	0.00	0.0	0.0	COMB
F	31157.9	8173.78	5366.77	258.44	7521.22	2866.87	0.0	400.0	

Additional Design Data

M	periphery-O/-I [m2/m]	[m2/m]	deff [mm]	t-min [mm]	t-max [mm]	SMP [o/o]	thet-p [tm2/m]	thet-y [tm2/m]	thet-z [tm2/m]	thet-yz [tm2/m]
	4.550		47.0	45.0	52.0	0.0	0.102	0.071	0.031	

SOFiSTiK AG - www.sofistik.de

Composite bridge 38+50+38, b=14.25m, 2x2HL1100R HISTAR460 , slab 0.30m C30/37

Cross section No. 751.5 = CS 30 - in-situ conc:C3

Cross section No. 752 - VFT

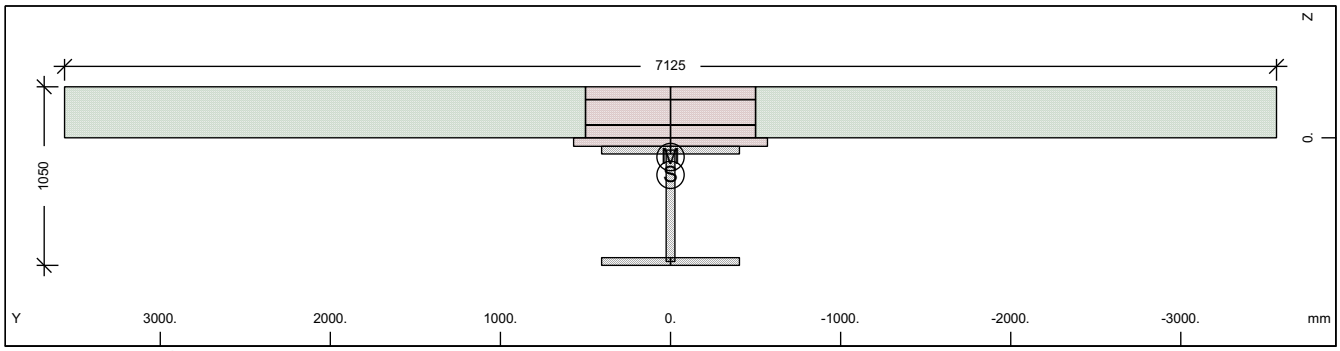

Cross section No. 752 - VFT

Static properties of cross section

Mat NoR	A[cm2] It[cm4]	Ay/Az/Ayz [cm2]	Iy/Iz/Iyz [cm4]	ys/zs [mm]	y/z-sc [mm]	modules [N/mm2]	gam [kN/m]
1	1642.18	1074.80	1946674.3	0.0	0.0	210000	63.26
	6270.0	462.67	897984.0	217.7	112.9	80769	

Additional static properties of cross section

Alfa-T [1/°K]	ymin ymax [mm]	zmin zmax [mm]	hymin hzmin [mm]	AK AB [cm2]	MB	Tau-T Tau-B [1/m3]	Tau-Vy Tau-Vz [1/m2]
1.2E-05	-3562.5	-517.7		2.115E+03		3.225E+01	1.326E+01
	3562.5	532.3		2.195E+04		1.189E+02	2.503E+01

Section values for warping

Wmin[cm2]	Wmax[cm2]	CM[cm6]	CMS[cm4]	ASwyy[cm6]	ASwzz[cm6]	ry[mm]	rz[mm]
-9367.06	9367.061	042624125.	1423880.6	2.35	5.10	0.0	321.1

Partial cross sections

Mat NoR	A[cm2] It[cm4]	Ay/Az/Ayz [cm2]	Iy/Iz/Iyz [cm4]	ys/zs [mm]	modules [N/mm2]	gam [kN/m]
1	1069.60	374.63	903669.7	0.0	210000	8.40
	7990.7	428.98	398580.9	400.0	80769	
30	3570.00	4030.92	146691.2	0.0	32837	8.93
	904750.1	193.18	3117310.1	-122.1	13682	
31	18375.00	41481168.	0.0	0.0	0	45.94
	5512501.0	37388.97901762872.		-150.0	0	
300	15.07	17.99	847.8	0.0	200000	0.00
	0.0	1.01	12560.0	-150.0	76923	

Design values of cross section

Mat NoR	A[cm2] It[cm4]	Ay/Az/Ayz [cm2]	Iy/Iz/Iyz [cm4]	ys/zs [mm]	modules [N/mm2]	gam [kN/m]
1	1511.92	915.42	1777982.7	0.0	182609	63.26
	6270.0	455.03	784247.7	247.0	70234	

Design forces and moments
(C/E = characteristic plastic/elastic, D=plast.Design, F=elast. Design)

	N[kN]	Vy[kN]	Vz[kN]	Mt[kNm]	My[kNm]	Mz[kNm]	y[mm]	z[mm]	BUCK
C	36585.2	50744.10	35388.07	99055.71	22135.36	59290.14	297.4	-132.	c c
C	-60238.3				34632.55	0.00	0.0	217.7	COMB
C	-32917.5				0.00	62637.10	0.0	0.0	COMB
C	-102420.	50744.10	35388.07	99055.72	-10272.8	-59290.1	-297.	378.2	
C	-5596.7				-10722.3	0.00	0.0	217.7	COMB
C	-32917.5				0.00	-62637.1	0.0	0.0	COMB
E	55012.9	5833.03	7727.07	523.56	7213.94	3022.57	0.0	217.7	
E	-31506.7	5833.03	7727.07	523.56	-12252.0	-3022.57	0.0	217.7	
D	31813.2	36778.50	25464.89	66149.80	18453.32	41510.95	197.9	-81.3	

SOFiSTiK AG - www.sofistik.de

Composite bridge 38+50+38, b=14.25m, 2x2HL1100R HISTAR460 , slab 0.30m C30/37

Design forces and moments
(C/E = characteristic plastic/elastic, D=plast.Design, F=elast. Design)

	N[kN]	Vy[kN]	Vz[kN]	Mt[kNm]	My[kNm]	Mz[kNm]	y[mm]	z[mm]	BUCK
D	-39023.3				25263.91	0.00	0.0	217.7	COMB
D	-21945.0				0.00	42829.79	0.0	0.0	COMB
D	-75703.2	36778.50	25464.89	66149.80	-8932.85	-41511.0	-198.	378.3	
D	-4866.7				-9323.74	0.00	0.0	217.7	COMB
D	-21945.0				0.00	-42829.8	0.0	0.0	COMB
F	47837.3	3888.69	6719.19	349.04	4809.30	2015.05	0.0	217.7	
F	-21004.4	3888.69	6719.19	349.04	-10653.9	-2015.05	0.0	217.7	

Additional Design Data

M	periphery-O/-I [m2/m]	[m2/m]	deff [mm]	t-min [mm]	t-max [mm]	SMP [o/o]	thet-p [tm2/m]	thet-y [tm2/m]	thet-z [tm2/m]	thet-yz [tm2/m]
	25.080		13.1	0.8	300.0	0.0	22.945	0.292	22.653	
1	4.550		47.0	45.0	52.0	0.0	0.102	0.071	0.031	
30	4.280		600.0	50.0	300.0	0.0	0.082	0.004	0.078	
31	12.250		300.0	300.0	300.0	0.0	22.544		22.544	
**	4.000		0.8	0.8	0.8	0.0	0.000	0.000	0.000	

Cross section No. 752.1 = CS 1 - steel alone

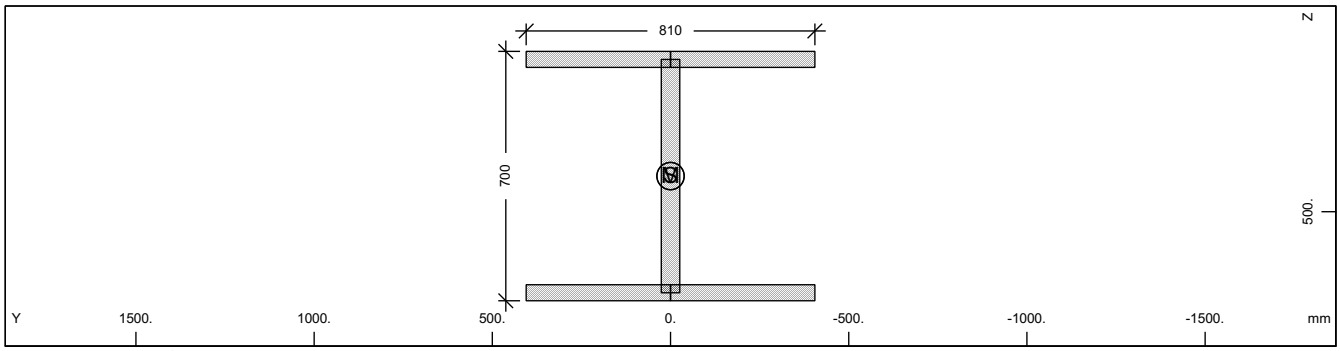

Cross section No. 752

Static properties of cross section

Mat NoR	A[cm2] It[cm4]	Ay/Az/Ayz [cm2]	Iy/Iz/Iyz [cm4]	ys/zs [mm]	modules [N/mm2]	gam [kN/m]
1	1069.60	607.50	903669.7	0.0	210000	8.40
	6270.0	288.17	398580.9	400.0	80769	

Additional static properties of cross section

Alfa-T [1/°K]	ymin ymax [mm]	zmin zmax [mm]	hymin hzmin [mm]	AK AB [cm2]	MB	Tau-T Tau-B [1/m3]	Tau-Vy Tau-Vz [1/m2]
1.2E-05	-405.0	-350.0		5.910E+02		6.508E+02	2.058E+01
	405.0	350.0				1.189E+02	3.134E+01

Section values for warping

Wmin[cm2]	Wmax[cm2]	CM[cm6]	CMS[cm4]	ASwyy[cm6]	ASwzz[cm6]	ry[mm]	rz[mm]
-1326.38	1326.38	427502762.	651581.6	-3.01	-6.82	0.0	0.0

Design values of cross section

Mat NoR	A[cm2] It[cm4]	Ay/Az/Ayz [cm2]	Iy/Iz/Iyz [cm4]	ys/zs [mm]	modules [N/mm2]	gam [kN/m]
1	1069.60	607.50	903669.7	0.0	182609	8.40
	6270.0	288.17	398580.9	400.0	70234	

Design forces and moments
(C/E = characteristic plastic/elastic, D=plast.Design, F=elast. Design)

	N[kN]	Vy[kN]	Vz[kN]	Mt[kNm]	My[kNm]	Mz[kNm]	y[mm]	z[mm]	BUCK
C	35831.6	14099.76	6587.62	488.52	9866.45	5093.69	0.0	400.0	c d
C	0.0				0.00	0.00	0.0	0.0	COMB
E	35831.6	9399.84	6171.79	297.21	8649.41	3296.90	0.0	400.0	
D	31157.9	12260.66	5728.37	424.80	8579.52	4429.29	0.0	400.0	

SOFiSTiK AG - www.sofistik.de

Composite bridge 38+50+38, b=14.25m, 2x2HL1100R HISTAR460 , slab 0.30m C30/37

Design forces and moments
(C/E = characteristic plastic/elastic, D=plast.Design, F=elast. Design)

	N[kN]	Vy[kN]	Vz[kN]	Mt[kNm]	My[kNm]	Mz[kNm]	y[mm]	z[mm]	BUCK
D	0.0				0.00	0.00	0.0	0.0	COMB
F	31157.9	8173.78	5366.77	258.44	7521.22	2866.87	0.0	400.0	

Additional Design Data

M	periphery-O/-I [m2/m]	[m2/m]	deff [mm]	t-min [mm]	t-max [mm]	SMP [o/o]	thet-p [tm2/m]	thet-y [tm2/m]	thet-z [tm2/m]	thet-yz [tm2/m]
	4.550		47.0	45.0	52.0	0.0	0.102	0.071	0.031	

Cross section No. 752.2 = CS 10 - prefab. slab C1

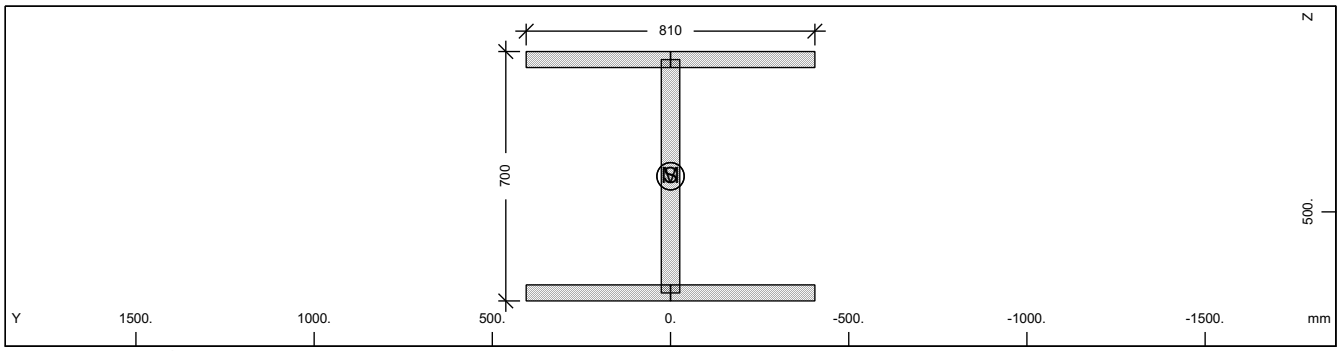

Cross section No. 752

Static properties of cross section

Mat NoR	A[cm2] It[cm4]	Ay/Az/Ayz [cm2]	Iy/Iz/Iyz [cm4]	ys/zs [mm]	modules [N/mm2]	gam [kN/m]
1	1069.60	607.50	903669.7	0.0	210000	8.40
	6270.0	288.17	398580.9	400.0	80769	

Additional static properties of cross section

Alfa-T [1/°K]	ymin ymax [mm]	zmin zmax [mm]	hymin hzmin [mm]	AK AB [cm2]	MB	Tau-T Tau-B [1/m3]	Tau-Vy Tau-Vz [1/m2]
1.2E-05	-405.0	-350.0		5.910E+02		6.508E+02	2.058E+01
	405.0	350.0				1.189E+02	3.134E+01

Section values for warping

Wmin[cm2]	Wmax[cm2]	CM[cm6]	CMS[cm4]	ASwyy[cm6]	ASwzz[cm6]	ry[mm]	rz[mm]
-1326.38	1326.38	427502762.	651581.6	-3.01	-6.82	0.0	0.0

Design values of cross section

Mat NoR	A[cm2] It[cm4]	Ay/Az/Ayz [cm2]	Iy/Iz/Iyz [cm4]	ys/zs [mm]	modules [N/mm2]	gam [kN/m]
1	1069.60	607.50	903669.7	0.0	182609	8.40
	6270.0	288.17	398580.9	400.0	70234	

Design forces and moments
(C/E = characteristic plastic/elastic, D=plast.Design, F=elast. Design)

	N[kN]	Vy[kN]	Vz[kN]	Mt[kNm]	My[kNm]	Mz[kNm]	y[mm]	z[mm]	BUCK
C	35831.6	14099.76	6587.62	488.52	9866.45	5093.69	0.0	400.0	c d
C	0.0				0.00	0.00	0.0	0.0	COMB
E	35831.6	9399.84	6171.79	297.21	8649.41	3296.90	0.0	400.0	
D	31157.9	12260.66	5728.37	424.80	8579.52	4429.29	0.0	400.0	
D	0.0				0.00	0.00	0.0	0.0	COMB
F	31157.9	8173.78	5366.77	258.44	7521.22	2866.87	0.0	400.0	

Additional Design Data

M	periphery-O/-I [m2/m]	[m2/m]	deff [mm]	t-min [mm]	t-max [mm]	SMP [o/o]	thet-p [tm2/m]	thet-y [tm2/m]	thet-z [tm2/m]	thet-yz [tm2/m]
	4.550		47.0	45.0	52.0	0.0	0.102	0.071	0.031	

SOFiSTiK AG - www.sofistik.de

Composite bridge 38+50+38, b=14.25m, 2x2HL1100R HISTAR460 , slab 0.30m C30/37

Cross section No. 752.3 = CS 20 - in-situ conc:C2

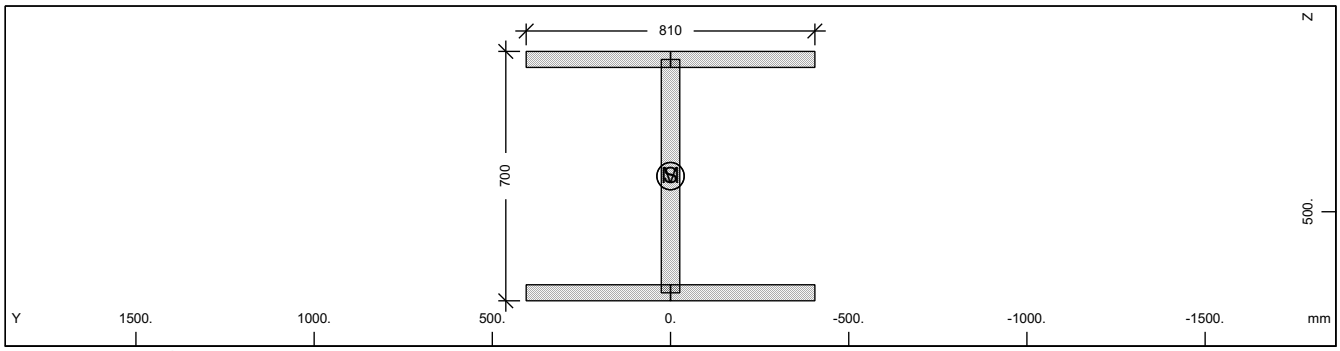

Cross section No. 752

Static properties of cross section

Mat NoR	A[cm2] It[cm4]	Ay/Az/Ayz [cm2]	Iy/Iz/Iyz [cm4]	ys/zs [mm]	modules [N/mm2]	gam [kN/m]
1	1069.60	607.50	903669.7	0.0	210000	8.40
	6270.0	288.17	398580.9	400.0	80769	

Additional static properties of cross section

Alfa-T [1/°K]	ymin ymax [mm]	zmin zmax [mm]	hymin hzmin [mm]	AK AB [cm2]	MB	Tau-T Tau-B [1/m3]	Tau-Vy Tau-Vz [1/m2]
1.2E-05	-405.0	-350.0		5.910E+02		6.508E+02	2.058E+01
	405.0	350.0				1.189E+02	3.134E+01

Section values for warping

Wmin[cm2]	Wmax[cm2]	CM[cm6]	CMS[cm4]	ASwyy[cm6]	ASwzz[cm6]	ry[mm]	rz[mm]
-1326.38	1326.38	427502762.	651581.6	-3.01	-6.82	0.0	0.0

Design values of cross section

Mat NoR	A[cm2] It[cm4]	Ay/Az/Ayz [cm2]	Iy/Iz/Iyz [cm4]	ys/zs [mm]	modules [N/mm2]	gam [kN/m]
1	1069.60	607.50	903669.7	0.0	182609	8.40
	6270.0	288.17	398580.9	400.0	70234	

Design forces and moments
(C/E = characteristic plastic/elastic, D=plast.Design, F=elast. Design)

	N[kN]	Vy[kN]	Vz[kN]	Mt[kNm]	My[kNm]	Mz[kNm]	y[mm]	z[mm]	BUCK
C	35831.6	14099.76	6587.62	488.52	9866.45	5093.69	0.0	400.0	c d
C	0.0				0.00	0.00	0.0	0.0	COMB
E	35831.6	9399.84	6171.79	297.21	8649.41	3296.90	0.0	400.0	
D	31157.9	12260.66	5728.37	424.80	8579.52	4429.29	0.0	400.0	
D	0.0				0.00	0.00	0.0	0.0	COMB
F	31157.9	8173.78	5366.77	258.44	7521.22	2866.87	0.0	400.0	

Additional Design Data

M	periphery-O/-I [m2/m] [m2/m]	deff [mm]	t-min [mm]	t-max [mm]	SMP [o/o]	thet-p [tm2/m]	thet-y [tm2/m]	thet-z [tm2/m]	thet-yz [tm2/m]
	4.550	47.0	45.0	52.0	0.0	0.102	0.071	0.031	

SOFiSTiK AG - www.sofistik.de

Composite bridge 38+50+38, b=14.25m, 2x2HL1100R HISTAR460 , slab 0.30m C30/37

Cross section No. 752.4 = CS 21 - reinf active:C2

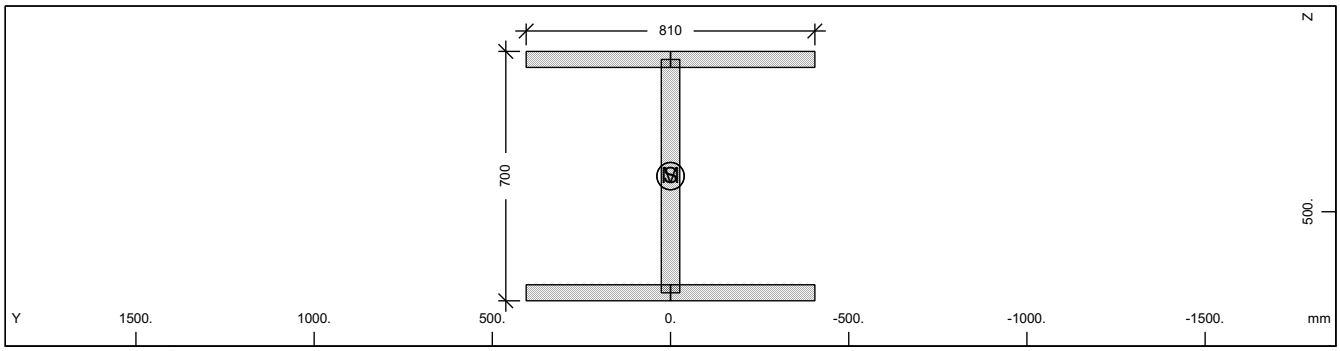

Cross section No. 752

Static properties of cross section

Mat / NoR	A[cm2] / It[cm4]	Ay/Az/Ayz [cm2]	Iy/Iz/Iyz [cm4]	ys/zs [mm]	modules [N/mm2]	gam [kN/m]
1	1069.60	607.50	903669.7	0.0	210000	8.40
	6270.0	288.17	398580.9	400.0	80769	

Additional static properties of cross section

Alfa-T [1/°K]	ymin / ymax [mm]	zmin / zmax [mm]	hymin / hzmin [mm]	AK / AB [cm2]	MB	Tau-T / Tau-B [1/m3]	Tau-Vy / Tau-Vz [1/m2]
1.2E-05	-405.0	-350.0		5.910E+02		6.508E+02	2.058E+01
	405.0	350.0				1.189E+02	3.134E+01

Section values for warping

Wmin[cm2]	Wmax[cm2]	CM[cm6]	CMS[cm4]	ASwyy[cm6]	ASwzz[cm6]	ry[mm]	rz[mm]
-1326.38	1326.38	427502762.	651581.6	-3.01	-6.82	0.0	0.0

Design values of cross section

Mat / NoR	A[cm2] / It[cm4]	Ay/Az/Ayz [cm2]	Iy/Iz/Iyz [cm4]	ys/zs [mm]	modules [N/mm2]	gam [kN/m]
1	1069.60	607.50	903669.7	0.0	182609	8.40
	6270.0	288.17	398580.9	400.0	70234	

Design forces and moments
(C/E = characteristic plastic/elastic, D=plast.Design, F=elast. Design)

	N[kN]	Vy[kN]	Vz[kN]	Mt[kNm]	My[kNm]	Mz[kNm]	y[mm]	z[mm]	BUCK
C	35831.6	14099.76	6587.62	488.52	9866.45	5093.69	0.0	400.0	c d
C	0.0				0.00	0.00	0.0	0.0	COMB
E	35831.6	9399.84	6171.79	297.21	8649.41	3296.90	0.0	400.0	
D	31157.9	12260.66	5728.37	424.80	8579.52	4429.29	0.0	400.0	
D	0.0				0.00	0.00	0.0	0.0	COMB
F	31157.9	8173.78	5366.77	258.44	7521.22	2866.87	0.0	400.0	

Additional Design Data

M	periphery-O/-I [m2/m]	[m2/m]	deff [mm]	t-min [mm]	t-max [mm]	SMP [o/o]	thet-p [tm2/m]	thet-y [tm2/m]	thet-z [tm2/m]	thet-yz [tm2/m]
	4.550		47.0	45.0	52.0	0.0	0.102	0.071	0.031	

SOFiSTiK AG - www.sofistik.de

Composite bridge 38+50+38, b=14.25m, 2x2HL1100R HISTAR460 , slab 0.30m C30/37

Cross section No. 752.5 = CS 30 - in-situ conc:C3

Cross section No. 753 - VFT

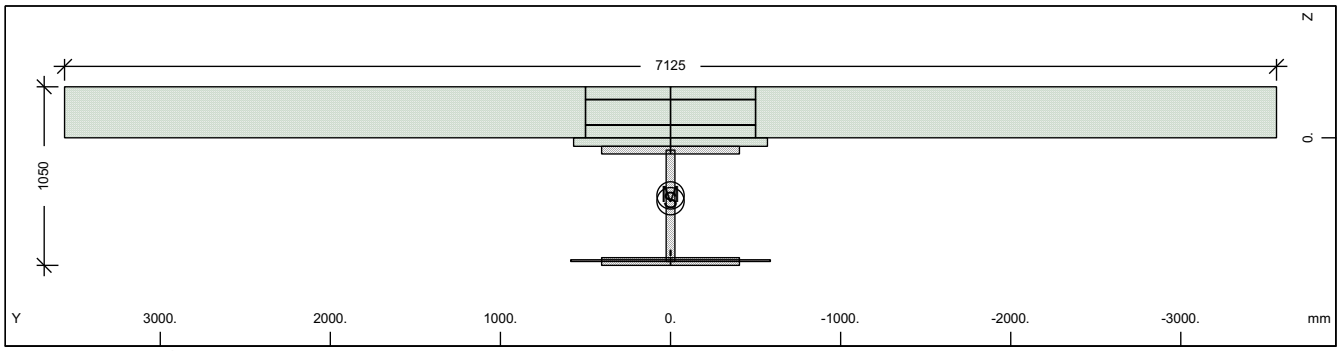

Cross section No. 753 - VFT

Static properties of cross section

Mat NoR	A[cm2] It[cm4]	Ay/Az/Ayz [cm2]	Iy/Iz/Iyz [cm4]	ys/zs [mm]	y/z-sc [mm]	modules [N/mm2]	gam [kN/m]
1	1135.99	645.43	1086280.2	0.0	0.0	210000	63.55
	6270.0	327.35	448426.4	372.9	338.9	80769	

Additional static properties of cross section

Alfa-T [1/°K]	ymin ymax [mm]	zmin zmax [mm]	hymin hzmin [mm]	AK AB [cm2]	MB	Tau-T Tau-B [1/m3]	Tau-Vy Tau-Vz [1/m2]
1.2E-05	-3562.5	-672.9		9.935E+01		1.715E+02	2.655E+01
	3562.5	377.1		2.206E+04		1.189E+02	2.907E+01

Section values for warping

Wmin[cm2]	Wmax[cm2]	CM[cm6]	CMS[cm4]	ASwyy[cm6]	ASwzz[cm6]	ry[mm]	rz[mm]
-17415.78	17415.78	564328746.	771743.0	0.60	1.46	0.0	40.8

Partial cross sections

Mat NoR	A[cm2] It[cm4]	Ay/Az/Ayz [cm2]	Iy/Iz/Iyz [cm4]	ys/zs [mm]	modules [N/mm2]	gam [kN/m]
1	1069.60	541.76	903669.7	0.0	210000	8.40
	7990.7	313.84	398580.9	400.0	80769	
25	117.40		9.8	0.0	10667	0.29
	539368.1	0.00	0.0	722.5	4444	
210	0.64	0.00	0.0	0.0	200000	0.00
	2.2	0.00	0.0	677.5	76923	
31	21945.00	81034377.	170028.4	0.0	0	54.86
	6417251.4	191356.89	904880243.	-145.5	0	
300	62.80	108.42	3532.5	0.0	200000	0.00
	2.1	14.01	52333.3	-150.0	76923	

Design values of cross section

Mat NoR	A[cm2] It[cm4]	Ay/Az/Ayz [cm2]	Iy/Iz/Iyz [cm4]	ys/zs [mm]	modules [N/mm2]	gam [kN/m]
1	1134.59	645.34	1084577.3	0.0	182609	63.55
	6270.0	327.18	448425.4	372.5	70234	

Design forces and moments
(C/E = characteristic plastic/elastic, D=plast.Design, F=elast. Design)

	N[kN]	Vy[kN]	Vz[kN]	Mt[kNm]	My[kNm]	Mz[kNm]	y[mm]	z[mm]	BUCK
C	39003.8	52140.45	36043.66	99179.80	22340.65	60206.52	279.8	-131.	c c
C	-68069.4				45787.38	0.00	0.0	372.9	COMB
C	-33093.6				0.00	63285.64	0.0	0.0	COMB
C	262309.1	52140.45	36043.66	99179.79	-11470.1	-60108.0	-280.	319.4	
C	1882.2				-11539.4	0.00	0.0	372.9	COMB
C	-33093.6				0.00	-63285.6	0.0	0.0	COMB
E	38055.5	10575.36	6652.62	96.23	9538.58	3709.21	0.0	372.9	

SOFiSTiK AG - www.sofistik.de

Composite bridge 38+50+38, b=14.25m, 2x2HL1100R HISTAR460 , slab 0.30m C30/37

Design forces and moments
(C/E = characteristic plastic/elastic, D=plast.Design, F=elast. Design)

	N[kN]	Vy[kN]	Vz[kN]	Mt[kNm]	My[kNm]	Mz[kNm]	y[mm]	z[mm]	BUCK
E	-38055.5	10575.36	6652.62	96.23	-9538.58	-3709.21	0.0	372.9	
D	33916.3	37992.72	25995.66	66234.62	18630.17	42170.82	186.1	-81.2	
D	-45818.5				32864.53	0.00	0.0	372.9	COMB
D	-22062.4				0.00	43383.25	0.0	0.0	COMB
D	166958.9	37992.72	25995.66	66234.62	-9972.46	-42127.1	-186.	317.5	
D	1693.7				-10032.5	0.00	0.0	372.9	COMB
D	-22062.4				0.00	-43383.3	0.0	0.0	COMB
F	33091.7	9195.97	5784.89	64.15	8294.41	3225.40	0.0	372.9	
F	-33091.7	9195.97	5784.89	64.15	-8294.41	-3225.40	0.0	372.9	

Additional Design Data

M	periphery-O/-I [m2/m]	[m2/m]	deff [mm]	t-min [mm]	t-max [mm]	SMP [o/o]	thet-p [tm2/m]	thet-y [tm2/m]	thet-z [tm2/m]	thet-yz [tm2/m]
	25.104		9.1	3.1	300.0	0.0	22.964	0.310	22.653	
1	4.550		47.0	45.0	52.0	0.0	0.102	0.071	0.031	
25	0.020		1174.0			0.0	0.000	0.000		
**	0.004		32.0			0.0	0.000		0.000	
31	16.530		265.5	50.0	300.0	0.0	22.626	0.004	22.622	
**	4.000		3.1	3.1	3.1	0.0	0.000	0.000	0.000	

Cross section No. 753.1 = CS 1 - steel alone

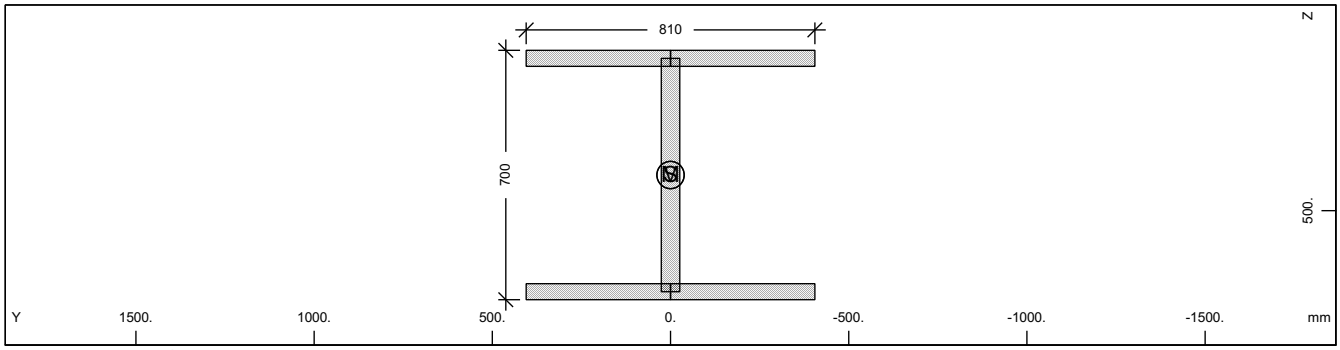

Cross section No. 753

Static properties of cross section

Mat NoR	A[cm2] It[cm4]	Ay/Az/Ayz [cm2]	Iy/Iz/Iyz [cm4]	ys/zs [mm]	modules [N/mm2]	gam [kN/m]
1	1069.60	607.50	903669.7	0.0	210000	8.40
	6270.0	288.17	398580.9	400.0	80769	

Additional static properties of cross section

Alfa-T [1/°K]	ymin ymax [mm]	zmin zmax [mm]	hymin hzmin [mm]	AK AB [cm2]	MB	Tau-T Tau-B [1/m3]	Tau-Vy Tau-Vz [1/m2]
1.2E-05	-405.0	-350.0		5.910E+02		6.508E+02	2.058E+01
	405.0	350.0				1.189E+02	3.134E+01

Section values for warping

Wmin[cm2]	Wmax[cm2]	CM[cm6]	CMS[cm4]	ASwyy[cm6]	ASwzz[cm6]	ry[mm]	rz[mm]
-1326.38	1326.38	427502762.	651581.6	-3.01	-6.82	0.0	0.0

Design values of cross section

Mat NoR	A[cm2] It[cm4]	Ay/Az/Ayz [cm2]	Iy/Iz/Iyz [cm4]	ys/zs [mm]	modules [N/mm2]	gam [kN/m]
1	1069.60	607.50	903669.7	0.0	182609	8.40
	6270.0	288.17	398580.9	400.0	70234	

SOFiSTiK AG - www.sofistik.de

Composite bridge 38+50+38, b=14.25m, 2x2HL1100R HISTAR460 , slab 0.30m C30/37

Design forces and moments
(C/E = characteristic plastic/elastic, D=plast.Design, F=elast. Design)

	N[kN]	Vy[kN]	Vz[kN]	Mt[kNm]	My[kNm]	Mz[kNm]	y[mm]	z[mm]	BUCK
C	35831.6	14099.76	6587.62	488.52	9866.45	5093.69	0.0	400.0	c d
C	0.0				0.00	0.00	0.0	0.0	COMB
E	35831.6	9399.84	6171.79	297.21	8649.41	3296.90	0.0	400.0	
D	31157.9	12260.66	5728.37	424.80	8579.52	4429.29	0.0	400.0	
D	0.0				0.00	0.00	0.0	0.0	COMB
F	31157.9	8173.78	5366.77	258.44	7521.22	2866.87	0.0	400.0	

Additional Design Data

M	periphery-O/-I [m2/m]	[m2/m]	deff [mm]	t-min [mm]	t-max [mm]	SMP [o/o]	thet-p [tm2/m]	thet-y [tm2/m]	thet-z [tm2/m]	thet-yz [tm2/m]
	4.550		47.0	45.0	52.0	0.0	0.102	0.071	0.031	

Cross section No. 753.2 = CS 10 - prefab. slab C1

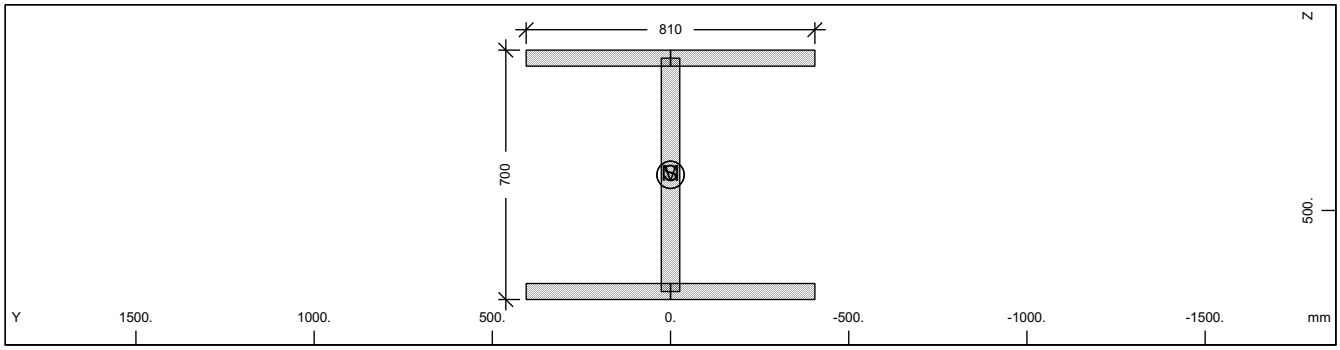

Cross section No. 753

Static properties of cross section

Mat NoR	A[cm2] It[cm4]	Ay/Az/Ayz [cm2]	Iy/Iz/Iyz [cm4]	ys/zs [mm]	modules [N/mm2]	gam [kN/m]
1	1069.60	607.50	903669.7	0.0	210000	8.40
	6270.0	288.17	398580.9	400.0	80769	

Additional static properties of cross section

Alfa-T [1/°K]	ymin ymax [mm]	zmin zmax [mm]	hymin hzmin [mm]	AK AB [cm2]	MB	Tau-T Tau-B [1/m3]	Tau-Vy Tau-Vz [1/m2]
1.2E-05	-405.0	-350.0		5.910E+02		6.508E+02	2.058E+01
	405.0	350.0				1.189E+02	3.134E+01

Section values for warping

Wmin[cm2]	Wmax[cm2]	CM[cm6]	CMS[cm4]	ASwyy[cm6]	ASwzz[cm6]	ry[mm]	rz[mm]
-1326.38	1326.38	427502762.	651581.6	-3.01	-6.82	0.0	0.0

Design values of cross section

Mat NoR	A[cm2] It[cm4]	Ay/Az/Ayz [cm2]	Iy/Iz/Iyz [cm4]	ys/zs [mm]	modules [N/mm2]	gam [kN/m]
1	1069.60	607.50	903669.7	0.0	182609	8.40
	6270.0	288.17	398580.9	400.0	70234	

Design forces and moments
(C/E = characteristic plastic/elastic, D=plast.Design, F=elast. Design)

	N[kN]	Vy[kN]	Vz[kN]	Mt[kNm]	My[kNm]	Mz[kNm]	y[mm]	z[mm]	BUCK
C	35831.6	14099.76	6587.62	488.52	9866.45	5093.69	0.0	400.0	c d
C	0.0				0.00	0.00	0.0	0.0	COMB
E	35831.6	9399.84	6171.79	297.21	8649.41	3296.90	0.0	400.0	
D	31157.9	12260.66	5728.37	424.80	8579.52	4429.29	0.0	400.0	
D	0.0				0.00	0.00	0.0	0.0	COMB
F	31157.9	8173.78	5366.77	258.44	7521.22	2866.87	0.0	400.0	

SOFiSTiK AG - www.sofistik.de

Composite bridge 38+50+38, b=14.25m, 2x2HL1100R HISTAR460 , slab 0.30m C30/37

Additional Design Data

M	periphery-O/-I [m2/m]	[m2/m]	deff [mm]	t-min [mm]	t-max [mm]	SMP [o/o]	thet-p [tm2/m]	thet-y [tm2/m]	thet-z [tm2/m]	thet-yz [tm2/m]
	4.550		47.0	45.0	52.0	0.0	0.102	0.071	0.031	

Cross section No. 753.3 = CS 20 - in-situ conc:C2

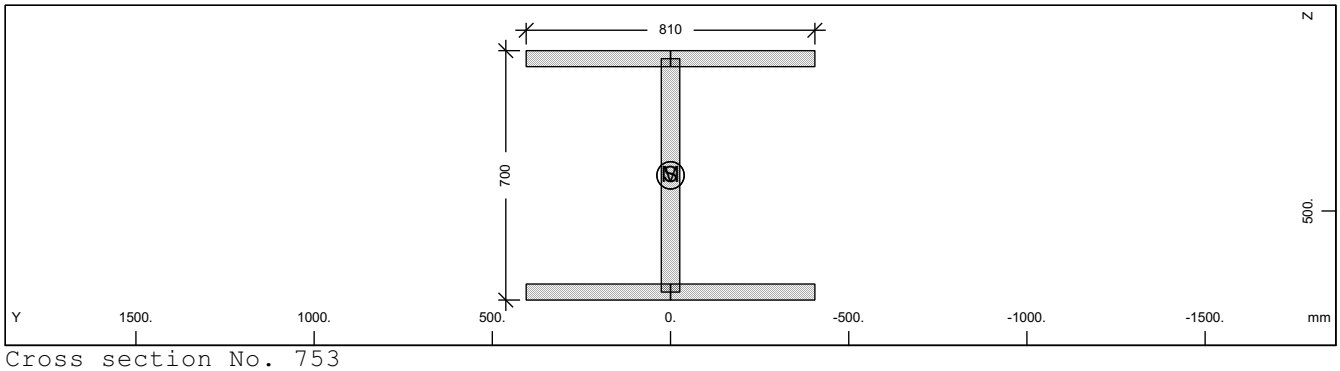

Cross section No. 753

Static properties of cross section

Mat NoR	A[cm2] It[cm4]	Ay/Az/Ayz [cm2]	Iy/Iz/Iyz [cm4]	ys/zs [mm]	modules [N/mm2]	gam [kN/m]
1	1069.60	607.50	903669.7	0.0	210000	8.40
	6270.0	288.17	398580.9	400.0	80769	

Additional static properties of cross section

Alfa-T [1/°K]	ymin ymax [mm]	zmin zmax [mm]	hymin hzmin [mm]	AK AB [cm2]	MB	Tau-T Tau-B [1/m3]	Tau-Vy Tau-Vz [1/m2]
1.2E-05	-405.0	-350.0		5.910E+02		6.508E+02	2.058E+01
	405.0	350.0				1.189E+02	3.134E+01

Section values for warping

Wmin[cm2]	Wmax[cm2]	CM[cm6]	CMS[cm4]	ASwyy[cm6]	ASwzz[cm6]	ry[mm]	rz[mm]
-1326.38	1326.38	427502762.	651581.6	-3.01	-6.82	0.0	0.0

Design values of cross section

Mat NoR	A[cm2] It[cm4]	Ay/Az/Ayz [cm2]	Iy/Iz/Iyz [cm4]	ys/zs [mm]	modules [N/mm2]	gam [kN/m]
1	1069.60	607.50	903669.7	0.0	182609	8.40
	6270.0	288.17	398580.9	400.0	70234	

Design forces and moments
(C/E = characteristic plastic/elastic, D=plast.Design, F=elast. Design)

	N[kN]	Vy[kN]	Vz[kN]	Mt[kNm]	My[kNm]	Mz[kNm]	y[mm]	z[mm]	BUCK
C	35831.6	14099.76	6587.62	488.52	9866.45	5093.69	0.0	400.0	c d
C	0.0				0.00	0.00	0.0	0.0	COMB
E	35831.6	9399.84	6171.79	297.21	8649.41	3296.90	0.0	400.0	
D	31157.9	12260.66	5728.37	424.80	8579.52	4429.29	0.0	400.0	
D	0.0				0.00	0.00	0.0	0.0	COMB
F	31157.9	8173.78	5366.77	258.44	7521.22	2866.87	0.0	400.0	

Additional Design Data

M	periphery-O/-I [m2/m]	[m2/m]	deff [mm]	t-min [mm]	t-max [mm]	SMP [o/o]	thet-p [tm2/m]	thet-y [tm2/m]	thet-z [tm2/m]	thet-yz [tm2/m]
	4.550		47.0	45.0	52.0	0.0	0.102	0.071	0.031	

SOFiSTiK AG - www.sofistik.de

Composite bridge 38+50+38, b=14.25m, 2x2HL1100R HISTAR460 , slab 0.30m C30/37

Cross section No. 753.4 = CS 21 - reinf active:C2

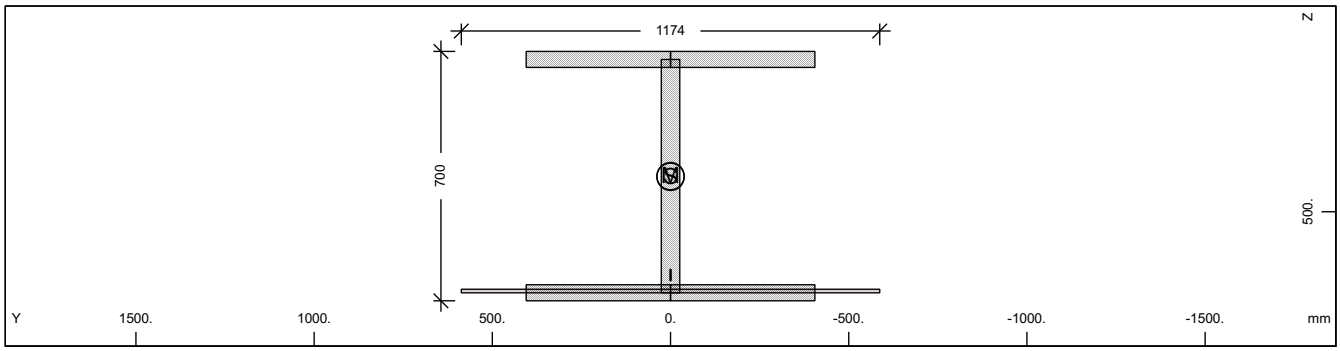

Cross section No. 753

Static properties of cross section

Mat NoR	A[cm2] It[cm4]	Ay/Az/Ayz [cm2]	Iy/Iz/Iyz [cm4]	ys/zs [mm]	modules [N/mm2]	gam [kN/m]
1	1076.18	607.50	910303.2	0.0	210000	8.69
	6270.0	288.72	398580.9	401.9	80769	

Additional static properties of cross section

Alfa-T [1/°K]	ymin ymax [mm]	zmin zmax [mm]	hymin hzmin [mm]	AK AB [cm2]	MB	Tau-T Tau-B [1/m3]	Tau-Vy Tau-Vz [1/m2]
1.2E-05	-587.0	-351.9		9.934E+01		1.715E+02	2.058E+01
	587.0	348.1		1.174E+02		1.189E+02	3.133E+01

Section values for warping

Wmin[cm2]	Wmax[cm2]	CM[cm6]	CMS[cm4]	ASwyy[cm6]	ASwzz[cm6]	ry[mm]	rz[mm]
-1326.38	1326.38	427502820.	651581.7	-1.15	-2.63	0.0	-0.5

Partial cross sections

Mat NoR	A[cm2] It[cm4]	Ay/Az/Ayz [cm2]	Iy/Iz/Iyz [cm4]	ys/zs [mm]	modules [N/mm2]	gam [kN/m]
1	1069.60	607.50	903669.7	0.0	210000	8.40
	7990.7	288.72	398580.9	400.0	80769	
25	117.40		9.8	0.0	10667	0.29
	539368.1	0.00	0.0	722.5	4444	
210	0.64	0.00	0.0	0.0	200000	0.00
	2.2	0.00	0.0	677.5	76923	

Design values of cross section

Mat NoR	A[cm2] It[cm4]	Ay/Az/Ayz [cm2]	Iy/Iz/Iyz [cm4]	ys/zs [mm]	modules [N/mm2]	gam [kN/m]
1	1074.78	607.50	908871.5	0.0	182609	8.69
	6270.0	288.72	398580.9	401.5	70234	

Design forces and moments
(C/E = characteristic plastic/elastic, D=plast.Design, F=elast. Design)

	N[kN]	Vy[kN]	Vz[kN]	Mt[kNm]	My[kNm]	Mz[kNm]	y[mm]	z[mm]	BUCK
C	35863.8	14118.33	7243.22	609.92	9999.89	5145.57	0.3	398.7	c c
C	-115.5				9998.92	0.00	0.0	401.9	COMB
C	-176.1				0.00	5145.63	0.0	0.0	COMB
C	-36216.0	14118.33	7243.22	609.92	-9887.60	-5145.48	-0.3	408.7	
C	-236.7				-9886.02	0.00	0.0	401.9	COMB
C	-176.1				0.00	-5145.63	0.0	0.0	COMB
E	36051.9	9399.84	6173.45	96.22	8664.75	3296.90	0.0	401.9	
E	-36051.9	9399.84	6173.45	96.22	-8664.75	-3296.90	0.0	401.9	
D	31185.9	12276.81	6259.15	507.29	8670.18	4463.89	0.2	399.2	
D	-84.3				8669.65	0.00	0.0	401.9	COMB
D	-117.4				0.00	4463.97	0.0	0.0	COMB
D	-31420.7	12276.81	6259.15	507.29	-8595.17	-4463.85	-0.2	406.9	
D	-150.5				-8594.38	0.00	0.0	401.9	COMB
D	-117.4				0.00	-4463.97	0.0	0.0	COMB

SOFiSTiK AG - www.sofistik.de

Composite bridge 38+50+38, b=14.25m, 2x2HL1100R HISTAR460 , slab 0.30m C30/37

Design forces and moments
(C/E = characteristic plastic/elastic, D=plast.Design, F=elast. Design)

	N[kN]	Vy[kN]	Vz[kN]	Mt[kNm]	My[kNm]	Mz[kNm]	y[mm]	z[mm]	BUCK
F	31349.5	8173.78	5368.22	64.15	7534.57	2866.87	0.0	401.9	
F	-31349.5	8173.78	5368.22	64.15	-7534.57	-2866.87	0.0	401.9	

Additional Design Data

M	periphery-O/-I [m2/m]	[m2/m]	deff [mm]	t-min [mm]	t-max [mm]	SMP [o/o]	thet-p [tm2/m]	thet-y [tm2/m]	thet-z [tm2/m]	thet-yz [tm2/m]
	4.574		47.1	32.0	52.0	0.0	0.105	0.074	0.031	
1	4.550		47.0	45.0	52.0	0.0	0.102	0.071	0.031	
25	0.020		1174.0			0.0	0.000	0.000		
**	0.004		32.0			0.0	0.000		0.000	

Cross section No. 753.5 = CS 30 - in-situ conc:C3

Cross section No. 851 - VFT

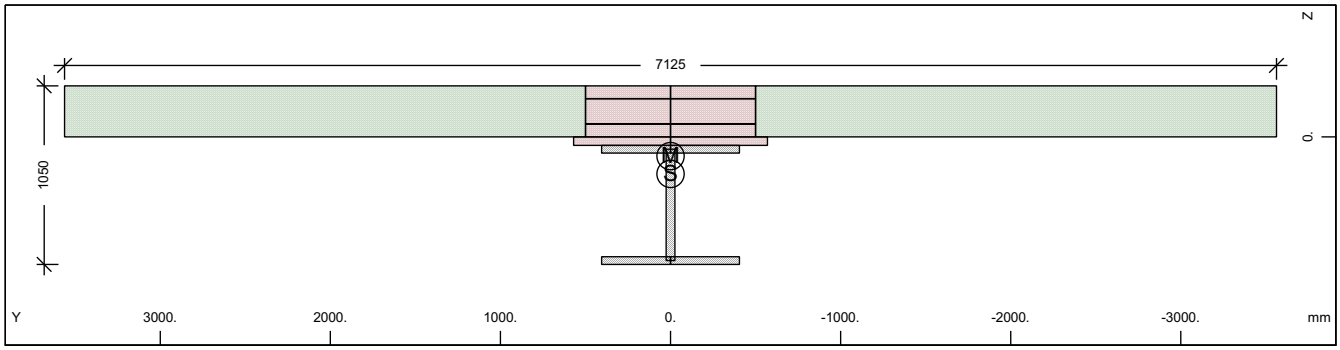

Cross section No. 851 - VFT

Static properties of cross section

Mat NoR	A[cm2] It[cm4]	Ay/Az/Ayz [cm2]	Iy/Iz/Iyz [cm4]	ys/zs [mm]	y/z-sc [mm]	modules [N/mm2]	gam [kN/m]
1	1642.18	1074.80	1946674.3	0.0	0.0	210000	63.26
	6270.0	462.67	897984.0	217.7	112.9	80769	

Additional static properties of cross section

Alfa-T [1/°K]	ymin ymax [mm]	zmin zmax [mm]	hymin hzmin [mm]	AK AB [cm2]	MB	Tau-T Tau-B [1/m3]	Tau-Vy Tau-Vz [1/m2]
1.2E-05	-3562.5	-517.7		2.115E+03		3.225E+01	1.326E+01
	3562.5	532.3		2.195E+04		1.189E+02	2.503E+01

Section values for warping

Wmin[cm2]	Wmax[cm2]	CM[cm6]	CMS[cm4]	ASwyy[cm6]	ASwzz[cm6]	ry[mm]	rz[mm]
-9367.06	9367.061042624125.		1423880.6	2.35	5.10	0.0	321.1

Partial cross sections

Mat NoR	A[cm2] It[cm4]	Ay/Az/Ayz [cm2]	Iy/Iz/Iyz [cm4]	ys/zs [mm]	modules [N/mm2]	gam [kN/m]
1	1069.60	374.63	903669.7	0.0	210000	8.40
	7990.7	428.98	398580.9	400.0	80769	
30	3570.00	4030.92	146691.2	0.0	32837	8.93
	904750.1	193.18	3117310.1	-122.1	13682	
31	18375.00	41481168.	0.0	0.0	0	45.94
	5512501.0	37388.97901762872.		-150.0	0	
300	15.07	17.99	847.8	0.0	200000	0.00
	0.0	1.01	12560.0	-150.0	76923	

SOFiSTiK AG - www.sofistik.de

Composite bridge 38+50+38, b=14.25m, 2x2HL1100R HISTAR460 , slab 0.30m C30/37

Design values of cross section

Mat NoR	A[cm2] It[cm4]	Ay/Az/Ayz [cm2]	Iy/Iz/Iyz [cm4]	ys/zs [mm]	modules [N/mm2]	gam [kN/m]
1	1511.92	915.42	1777982.7	0.0	182609	63.26
	6270.0	455.03	784247.7	247.0	70234	

Design forces and moments
(C/E = characteristic plastic/elastic, D=plast.Design, F=elast. Design)

	N[kN]	Vy[kN]	Vz[kN]	Mt[kNm]	My[kNm]	Mz[kNm]	y[mm]	z[mm]	BUCK
C	36585.2	50744.10	35388.07	99055.71	22135.36	59290.14	297.4	-132.	c d
C	-60238.3				34632.55	0.00	0.0	217.7	COMB
C	-32917.5				0.00	62637.10	0.0	0.0	COMB
C	-102420.	50744.10	35388.07	99055.72	-10272.8	-59290.1	-297.	378.2	
C	-5596.7				-10722.3	0.00	0.0	217.7	COMB
C	-32917.5				0.00	-62637.1	0.0	0.0	COMB
E	55012.9	5833.03	7727.07	523.56	7213.94	3022.57	0.0	217.7	
E	-31506.7	5833.03	7727.07	523.56	-12252.0	-3022.57	0.0	217.7	
D	31813.2	36778.50	25464.89	66149.80	18453.32	41510.95	197.9	-81.3	
D	-39023.3				25263.91	0.00	0.0	217.7	COMB
D	-21945.0				0.00	42829.79	0.0	0.0	COMB
D	-75703.2	36778.50	25464.89	66149.80	-8932.85	-41511.0	-198.	378.3	
D	-4866.7				-9323.74	0.00	0.0	217.7	COMB
D	-21945.0				0.00	-42829.8	0.0	0.0	COMB
F	47837.3	3888.69	6719.19	349.04	4809.30	2015.05	0.0	217.7	
F	-21004.4	3888.69	6719.19	349.04	-10653.9	-2015.05	0.0	217.7	

Additional Design Data

M	periphery-O/-I [m2/m]	[m2/m]	deff [mm]	t-min [mm]	t-max [mm]	SMP [o/o]	thet-p [tm2/m]	thet-y [tm2/m]	thet-z [tm2/m]	thet-yz [tm2/m]
	25.080		13.1	0.8	300.0	0.0	22.945	0.292	22.653	
1	4.550		47.0	45.0	52.0	0.0	0.102	0.071	0.031	
30	4.280		600.0	50.0	300.0	0.0	0.082	0.004	0.078	
31	12.250		300.0	300.0	300.0	0.0	22.544		22.544	
**	4.000		0.8	0.8	0.8	0.0	0.000	0.000	0.000	

Cross section No. 851.1 = CS 1 - steel alone

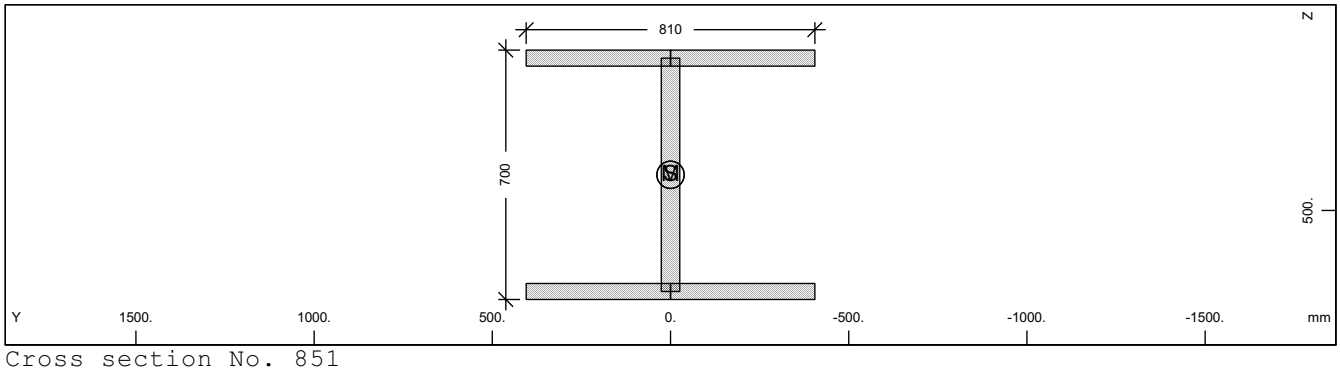

Cross section No. 851

Static properties of cross section

Mat NoR	A[cm2] It[cm4]	Ay/Az/Ayz [cm2]	Iy/Iz/Iyz [cm4]	ys/zs [mm]	modules [N/mm2]	gam [kN/m]
1	1069.60	607.50	903669.7	0.0	210000	8.40
	6270.0	288.17	398580.9	400.0	80769	

Additional static properties of cross section

Alfa-T [1/°K]	ymin ymax [mm]	zmin zmax [mm]	hymin hzmin [mm]	AK AB [cm2]	MB	Tau-T Tau-B [1/m3]	Tau-Vy Tau-Vz [1/m2]
1.2E-05	-405.0	-350.0		5.910E+02		6.508E+02	2.058E+01
	405.0	350.0				1.189E+02	3.134E+01

SOFiSTiK AG - www.sofistik.de

Composite bridge 38+50+38, b=14.25m, 2x2HL1100R HISTAR460 , slab 0.30m C30/37

Section values for warping

Wmin[cm2]	Wmax[cm2]	CM[cm6]	CMS[cm4]	ASwyy[cm6]	ASwzz[cm6]	ry[mm]	rz[mm]
-1326.38	1326.38	427502762.	651581.6	-3.01	-6.82	0.0	0.0

Design values of cross section

Mat NoR	A[cm2] It[cm4]	Ay/Az/Ayz [cm2]	Iy/Iz/Iyz [cm4]	ys/zs [mm]	modules [N/mm2]	gam [kN/m]
1	1069.60	607.50	903669.7	0.0	182609	8.40
	6270.0	288.17	398580.9	400.0	70234	

Design forces and moments
(C/E = characteristic plastic/elastic, D=plast.Design, F=elast. Design)

	N[kN]	Vy[kN]	Vz[kN]	Mt[kNm]	My[kNm]	Mz[kNm]	y[mm]	z[mm]	BUCK
C	35831.6	14099.76	6587.62	488.52	9866.45	5093.69	0.0	400.0	c d
C	0.0				0.00	0.00	0.0	0.0	COMB
E	35831.6	9399.84	6171.79	297.21	8649.41	3296.90	0.0	400.0	
D	31157.9	12260.66	5728.37	424.80	8579.52	4429.29	0.0	400.0	
D	0.0				0.00	0.00	0.0	0.0	COMB
F	31157.9	8173.78	5366.77	258.44	7521.22	2866.87	0.0	400.0	

Additional Design Data

M	periphery-O/-I [m2/m]	[m2/m]	deff [mm]	t-min [mm]	t-max [mm]	SMP [o/o]	thet-p [tm2/m]	thet-y [tm2/m]	thet-z [tm2/m]	thet-yz [tm2/m]
	4.550		47.0	45.0	52.0	0.0	0.102	0.071	0.031	

Cross section No. 851.2 = CS 10 - prefab. slab C1

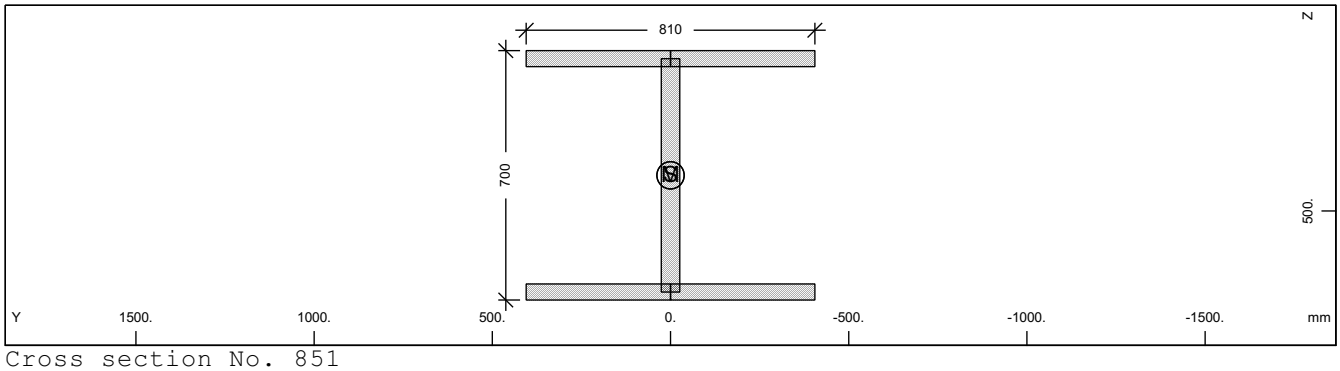

Cross section No. 851

Static properties of cross section

Mat NoR	A[cm2] It[cm4]	Ay/Az/Ayz [cm2]	Iy/Iz/Iyz [cm4]	ys/zs [mm]	modules [N/mm2]	gam [kN/m]
1	1069.60	607.50	903669.7	0.0	210000	8.40
	6270.0	288.17	398580.9	400.0	80769	

Additional static properties of cross section

Alfa-T [1/°K]	ymin ymax [mm]	zmin zmax [mm]	hymin hzmin [mm]	AK AB [cm2]	MB	Tau-T Tau-B [1/m3]	Tau-Vy Tau-Vz [1/m2]
1.2E-05	-405.0	-350.0		5.910E+02		6.508E+02	2.058E+01
	405.0	350.0				1.189E+02	3.134E+01

Section values for warping

Wmin[cm2]	Wmax[cm2]	CM[cm6]	CMS[cm4]	ASwyy[cm6]	ASwzz[cm6]	ry[mm]	rz[mm]
-1326.38	1326.38	427502762.	651581.6	-3.01	-6.82	0.0	0.0

Design values of cross section

Mat NoR	A[cm2] It[cm4]	Ay/Az/Ayz [cm2]	Iy/Iz/Iyz [cm4]	ys/zs [mm]	modules [N/mm2]	gam [kN/m]
1	1069.60	607.50	903669.7	0.0	182609	8.40
	6270.0	288.17	398580.9	400.0	70234	

SOFiSTiK AG - www.sofistik.de

Composite bridge 38+50+38, b=14.25m, 2x2HL1100R HISTAR460 , slab 0.30m C30/37

Design forces and moments
(C/E = characteristic plastic/elastic, D=plast.Design, F=elast. Design)

	N[kN]	Vy[kN]	Vz[kN]	Mt[kNm]	My[kNm]	Mz[kNm]	y[mm]	z[mm]	BUCK
C	35831.6	14099.76	6587.62	488.52	9866.45	5093.69	0.0	400.0	c d
C	0.0				0.00	0.00	0.0	0.0	COMB
E	35831.6	9399.84	6171.79	297.21	8649.41	3296.90	0.0	400.0	
D	31157.9	12260.66	5728.37	424.80	8579.52	4429.29	0.0	400.0	
D	0.0				0.00	0.00	0.0	0.0	COMB
F	31157.9	8173.78	5366.77	258.44	7521.22	2866.87	0.0	400.0	

Additional Design Data

M	periphery-O/-I [m2/m]	[m2/m]	deff [mm]	t-min [mm]	t-max [mm]	SMP [o/o]	thet-p [tm2/m]	thet-y [tm2/m]	thet-z [tm2/m]	thet-yz [tm2/m]
	4.550		47.0	45.0	52.0	0.0	0.102	0.071	0.031	

Cross section No. 851.3 = CS 20 - in-situ conc:C2

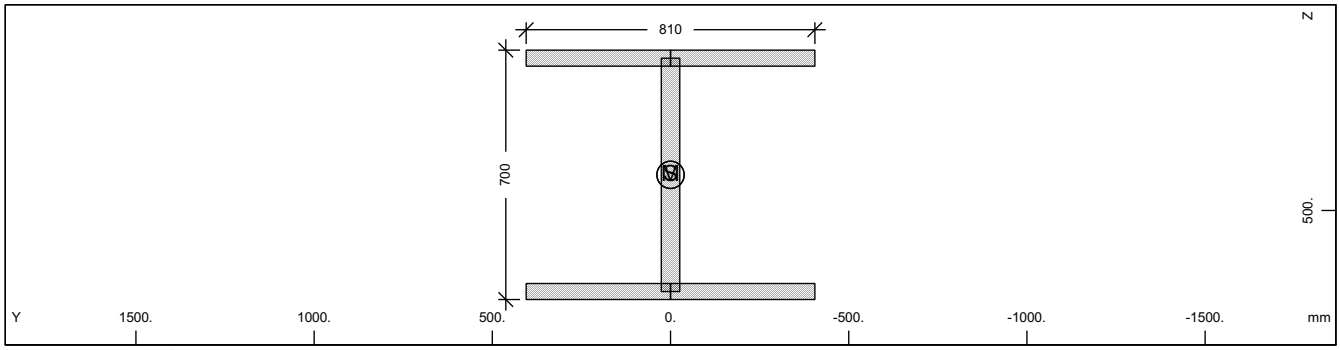

Cross section No. 851

Static properties of cross section

Mat NoR	A[cm2] It[cm4]	Ay/Az/Ayz [cm2]	Iy/Iz/Iyz [cm4]	ys/zs [mm]	modules [N/mm2]	gam [kN/m]
1	1069.60	607.50	903669.7	0.0	210000	8.40
	6270.0	288.17	398580.9	400.0	80769	

Additional static properties of cross section

Alfa-T [1/°K]	ymin ymax [mm]	zmin zmax [mm]	hymin hzmin [mm]	AK AB [cm2]	MB	Tau-T Tau-B [1/m3]	Tau-Vy Tau-Vz [1/m2]
1.2E-05	-405.0	-350.0		5.910E+02		6.508E+02	2.058E+01
	405.0	350.0				1.189E+02	3.134E+01

Section values for warping

Wmin[cm2]	Wmax[cm2]	CM[cm6]	CMS[cm4]	ASwyy[cm6]	ASwzz[cm6]	ry[mm]	rz[mm]
-1326.38	1326.38	427502762.	651581.6	-3.01	-6.82	0.0	0.0

Design values of cross section

Mat NoR	A[cm2] It[cm4]	Ay/Az/Ayz [cm2]	Iy/Iz/Iyz [cm4]	ys/zs [mm]	modules [N/mm2]	gam [kN/m]
1	1069.60	607.50	903669.7	0.0	182609	8.40
	6270.0	288.17	398580.9	400.0	70234	

Design forces and moments
(C/E = characteristic plastic/elastic, D=plast.Design, F=elast. Design)

	N[kN]	Vy[kN]	Vz[kN]	Mt[kNm]	My[kNm]	Mz[kNm]	y[mm]	z[mm]	BUCK
C	35831.6	14099.76	6587.62	488.52	9866.45	5093.69	0.0	400.0	c d
C	0.0				0.00	0.00	0.0	0.0	COMB
E	35831.6	9399.84	6171.79	297.21	8649.41	3296.90	0.0	400.0	
D	31157.9	12260.66	5728.37	424.80	8579.52	4429.29	0.0	400.0	
D	0.0				0.00	0.00	0.0	0.0	COMB
F	31157.9	8173.78	5366.77	258.44	7521.22	2866.87	0.0	400.0	

SOFiSTiK AG - www.sofistik.de

Composite bridge 38+50+38, b=14.25m, 2x2HL1100R HISTAR460 , slab 0.30m C30/37

Additional Design Data

M	periphery-O/-I [m2/m]	[m2/m]	deff [mm]	t-min [mm]	t-max [mm]	SMP [o/o]	thet-p [tm2/m]	thet-y [tm2/m]	thet-z [tm2/m]	thet-yz [tm2/m]
	4.550		47.0	45.0	52.0	0.0	0.102	0.071	0.031	

Cross section No. 851.4 = CS 21 - reinf active:C2

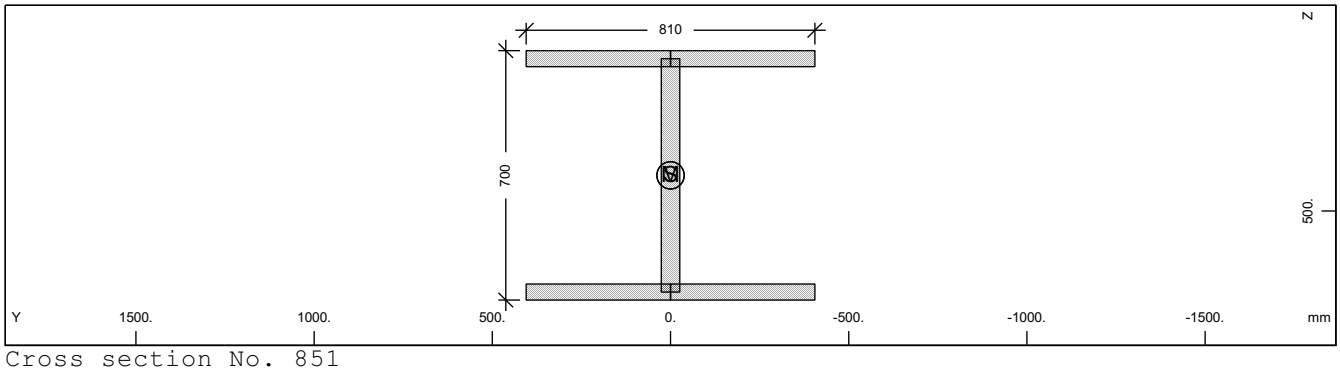

Cross section No. 851

Static properties of cross section

Mat NoR	A[cm2] It[cm4]	Ay/Az/Ayz [cm2]	Iy/Iz/Iyz [cm4]	ys/zs [mm]	modules [N/mm2]	gam [kN/m]
1	1069.60	607.50	903669.7	0.0	210000	8.40
	6270.0	288.17	398580.9	400.0	80769	

Additional static properties of cross section

Alfa-T [1/°K]	ymin ymax [mm]	zmin zmax [mm]	hymin hzmin [mm]	AK AB [cm2]	MB	Tau-T Tau-B [1/m3]	Tau-Vy Tau-Vz [1/m2]
1.2E-05	-405.0	-350.0		5.910E+02		6.508E+02	2.058E+01
	405.0	350.0				1.189E+02	3.134E+01

Section values for warping

Wmin[cm2]	Wmax[cm2]	CM[cm6]	CMS[cm4]	ASwyy[cm6]	ASwzz[cm6]	ry[mm]	rz[mm]
-1326.38	1326.38	427502762.	651581.6	-3.01	-6.82	0.0	0.0

Design values of cross section

Mat NoR	A[cm2] It[cm4]	Ay/Az/Ayz [cm2]	Iy/Iz/Iyz [cm4]	ys/zs [mm]	modules [N/mm2]	gam [kN/m]
1	1069.60	607.50	903669.7	0.0	182609	8.40
	6270.0	288.17	398580.9	400.0	70234	

Design forces and moments
(C/E = characteristic plastic/elastic, D=plast.Design, F=elast. Design)

	N[kN]	Vy[kN]	Vz[kN]	Mt[kNm]	My[kNm]	Mz[kNm]	y[mm]	z[mm]	BUCK
C	35831.6	14099.76	6587.62	488.52	9866.45	5093.69	0.0	400.0	c d
C	0.0				0.00	0.00	0.0	0.0	COMB
E	35831.6	9399.84	6171.79	297.21	8649.41	3296.90	0.0	400.0	
D	31157.9	12260.66	5728.37	424.80	8579.52	4429.29	0.0	400.0	
D	0.0				0.00	0.00	0.0	0.0	COMB
F	31157.9	8173.78	5366.77	258.44	7521.22	2866.87	0.0	400.0	

Additional Design Data

M	periphery-O/-I [m2/m]	[m2/m]	deff [mm]	t-min [mm]	t-max [mm]	SMP [o/o]	thet-p [tm2/m]	thet-y [tm2/m]	thet-z [tm2/m]	thet-yz [tm2/m]
	4.550		47.0	45.0	52.0	0.0	0.102	0.071	0.031	

SOFiSTiK AG - www.sofistik.de

Composite bridge 38+50+38, b=14.25m, 2x2HL1100R HISTAR460 , slab 0.30m C30/37

Cross section No. 851.5 = CS 30 - in-situ conc:C3

Cross section No. 852 - VFT

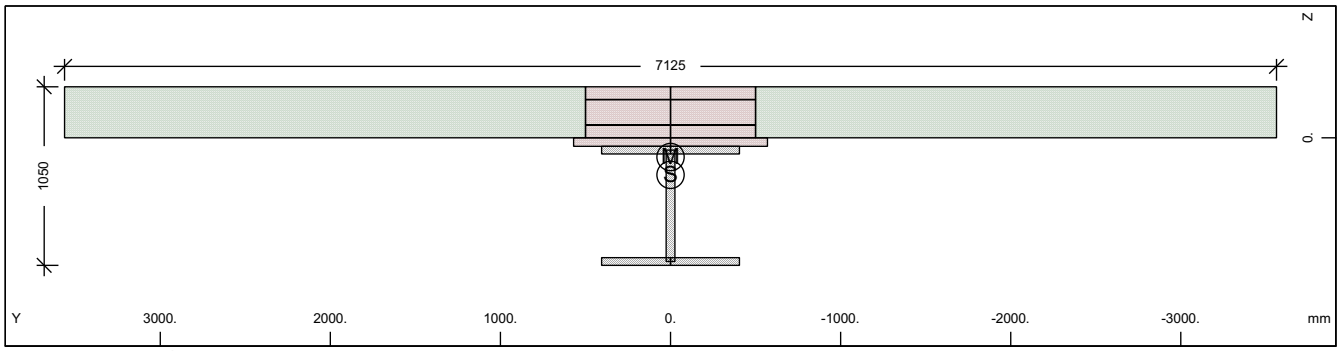

Cross section No. 852 - VFT

Static properties of cross section

Mat NoR	A[cm2] It[cm4]	Ay/Az/Ayz [cm2]	Iy/Iz/Iyz [cm4]	ys/zs [mm]	y/z-sc [mm]	modules [N/mm2]	gam [kN/m]
1	1642.18	1074.80	1946674.3	0.0	0.0	210000	63.26
	6270.0	462.67	897984.0	217.7	112.9	80769	

Additional static properties of cross section

Alfa-T [1/°K]	ymin ymax [mm]	zmin zmax [mm]	hymin hzmin [mm]	AK AB [cm2]	MB	Tau-T Tau-B [1/m3]	Tau-Vy Tau-Vz [1/m2]
1.2E-05	-3562.5	-517.7		2.115E+03		3.225E+01	1.326E+01
	3562.5	532.3		2.195E+04		1.189E+02	2.503E+01

Section values for warping

Wmin[cm2]	Wmax[cm2]	CM[cm6]	CMS[cm4]	ASwyy[cm6]	ASwzz[cm6]	ry[mm]	rz[mm]
-9367.06	9367.061042624125.		1423880.6	2.35	5.10	0.0	321.1

Partial cross sections

Mat NoR	A[cm2] It[cm4]	Ay/Az/Ayz [cm2]	Iy/Iz/Iyz [cm4]	ys/zs [mm]	modules [N/mm2]	gam [kN/m]
1	1069.60	374.63	903669.7	0.0	210000	8.40
	7990.7	428.98	398580.9	400.0	80769	
30	3570.00	4030.92	146691.2	0.0	32837	8.93
	904750.1	193.18	3117310.1	-122.1	13682	
31	18375.00	41481168.	0.0	0.0	0	45.94
	5512501.0	37388.97901762872.		-150.0	0	
300	15.07	17.99	847.8	0.0	200000	0.00
	0.0	1.01	12560.0	-150.0	76923	

Design values of cross section

Mat NoR	A[cm2] It[cm4]	Ay/Az/Ayz [cm2]	Iy/Iz/Iyz [cm4]	ys/zs [mm]	modules [N/mm2]	gam [kN/m]
1	1511.92	915.42	1777982.7	0.0	182609	63.26
	6270.0	455.03	784247.7	247.0	70234	

Design forces and moments
(C/E = characteristic plastic/elastic, D=plast.Design, F=elast. Design)

	N[kN]	Vy[kN]	Vz[kN]	Mt[kNm]	My[kNm]	Mz[kNm]	y[mm]	z[mm]	BUCK
C	36585.2	50744.10	35388.07	99055.71	22135.36	59290.14	297.4	-132.	c c
C	-60238.3				34632.55	0.00	0.0	217.7	COMB
C	-32917.5				0.00	62637.10	0.0	0.0	COMB
C	-102420.	50744.10	35388.07	99055.72	-10272.8	-59290.1	-297.	378.2	
C	-5596.7				-10722.3	0.00	0.0	217.7	COMB
C	-32917.5				0.00	-62637.1	0.0	0.0	COMB
E	55012.9	5833.03	7727.07	523.56	7213.94	3022.57	0.0	217.7	
E	-31506.7	5833.03	7727.07	523.56	-12252.0	-3022.57	0.0	217.7	
D	31813.2	36778.50	25464.89	66149.80	18453.32	41510.95	197.9	-81.3	

SOFiSTiK AG - www.sofistik.de

Composite bridge 38+50+38, b=14.25m, 2x2HL1100R HISTAR460 , slab 0.30m C30/37

Design forces and moments
(C/E = characteristic plastic/elastic, D=plast.Design, F=elast. Design)

	N[kN]	Vy[kN]	Vz[kN]	Mt[kNm]	My[kNm]	Mz[kNm]	y[mm]	z[mm]	BUCK
D	-39023.3				25263.91	0.00	0.0	217.7	COMB
D	-21945.0				0.00	42829.79	0.0	0.0	COMB
D	-75703.2	36778.50	25464.89	66149.80	-8932.85	-41511.0	-198.	378.3	
D	-4866.7				-9323.74	0.00	0.0	217.7	COMB
D	-21945.0				0.00	-42829.8	0.0	0.0	COMB
F	47837.3	3888.69	6719.19	349.04	4809.30	2015.05	0.0	217.7	
F	-21004.4	3888.69	6719.19	349.04	-10653.9	-2015.05	0.0	217.7	

Additional Design Data

M	periphery-O/-I [m2/m]	[m2/m]	deff [mm]	t-min [mm]	t-max [mm]	SMP [o/o]	thet-p [tm2/m]	thet-y [tm2/m]	thet-z [tm2/m]	thet-yz [tm2/m]
	25.080		13.1	0.8	300.0	0.0	22.945	0.292	22.653	
1	4.550		47.0	45.0	52.0	0.0	0.102	0.071	0.031	
30	4.280		600.0	50.0	300.0	0.0	0.082	0.004	0.078	
31	12.250		300.0	300.0	300.0	0.0	22.544		22.544	
**	4.000		0.8	0.8	0.8	0.0	0.000	0.000	0.000	

Cross section No. 852.1 = CS 1 - steel alone

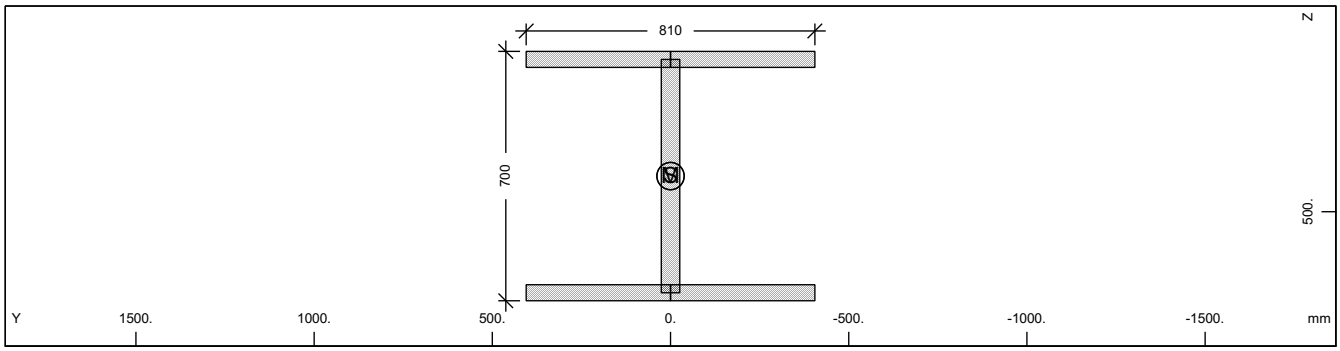

Cross section No. 852

Static properties of cross section

Mat NoR	A[cm2] It[cm4]	Ay/Az/Ayz [cm2]	Iy/Iz/Iyz [cm4]	ys/zs [mm]	modules [N/mm2]	gam [kN/m]
1	1069.60	607.50	903669.7	0.0	210000	8.40
	6270.0	288.17	398580.9	400.0	80769	

Additional static properties of cross section

Alfa-T [1/°K]	ymin ymax [mm]	zmin zmax [mm]	hymin hzmin [mm]	AK AB [cm2]	MB	Tau-T Tau-B [1/m3]	Tau-Vy Tau-Vz [1/m2]
1.2E-05	-405.0	-350.0		5.910E+02		6.508E+02	2.058E+01
	405.0	350.0				1.189E+02	3.134E+01

Section values for warping

Wmin[cm2]	Wmax[cm2]	CM[cm6]	CMS[cm4]	ASwyy[cm6]	ASwzz[cm6]	ry[mm]	rz[mm]
-1326.38	1326.38	427502762.	651581.6	-3.01	-6.82	0.0	0.0

Design values of cross section

Mat NoR	A[cm2] It[cm4]	Ay/Az/Ayz [cm2]	Iy/Iz/Iyz [cm4]	ys/zs [mm]	modules [N/mm2]	gam [kN/m]
1	1069.60	607.50	903669.7	0.0	182609	8.40
	6270.0	288.17	398580.9	400.0	70234	

Design forces and moments
(C/E = characteristic plastic/elastic, D=plast.Design, F=elast. Design)

	N[kN]	Vy[kN]	Vz[kN]	Mt[kNm]	My[kNm]	Mz[kNm]	y[mm]	z[mm]	BUCK
C	35831.6	14099.76	6587.62	488.52	9866.45	5093.69	0.0	400.0	c d
C	0.0				0.00	0.00	0.0	0.0	COMB
E	35831.6	9399.84	6171.79	297.21	8649.41	3296.90	0.0	400.0	
D	31157.9	12260.66	5728.37	424.80	8579.52	4429.29	0.0	400.0	

SOFiSTiK AG - www.sofistik.de

Composite bridge 38+50+38, b=14.25m, 2x2HL1100R HISTAR460 , slab 0.30m C30/37

Design forces and moments
(C/E = characteristic plastic/elastic, D=plast.Design, F=elast. Design)

	N[kN]	Vy[kN]	Vz[kN]	Mt[kNm]	My[kNm]	Mz[kNm]	y[mm]	z[mm]	BUCK
D	0.0				0.00	0.00	0.0	0.0	COMB
F	31157.9	8173.78	5366.77	258.44	7521.22	2866.87	0.0	400.0	

Additional Design Data

M	periphery-O/-I [m2/m]	[m2/m]	deff [mm]	t-min [mm]	t-max [mm]	SMP [o/o]	thet-p [tm2/m]	thet-y [tm2/m]	thet-z [tm2/m]	thet-yz [tm2/m]
	4.550		47.0	45.0	52.0	0.0	0.102	0.071	0.031	

Cross section No. 852.2 = CS 10 - prefab. slab C1

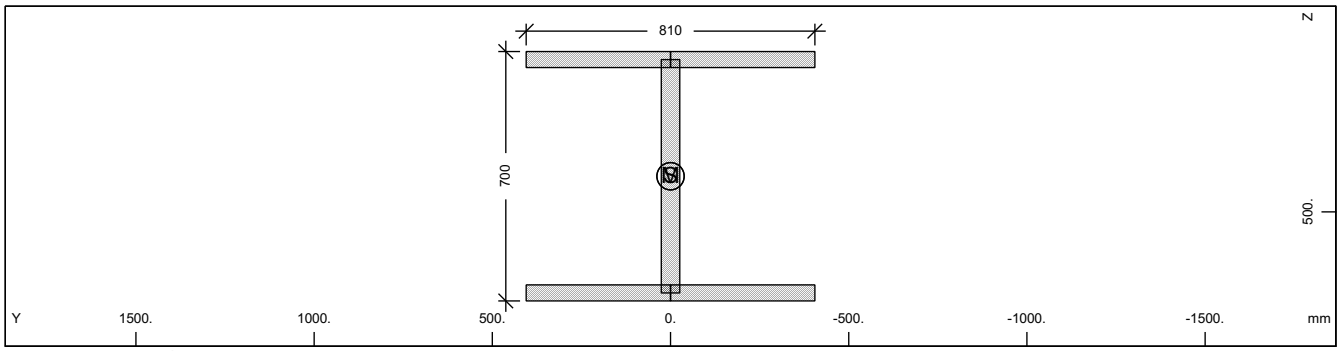

Cross section No. 852

Static properties of cross section

Mat NoR	A[cm2] It[cm4]	Ay/Az/Ayz [cm2]	Iy/Iz/Iyz [cm4]	ys/zs [mm]	modules [N/mm2]	gam [kN/m]
1	1069.60	607.50	903669.7	0.0	210000	8.40
	6270.0	288.17	398580.9	400.0	80769	

Additional static properties of cross section

Alfa-T [1/°K]	ymin ymax [mm]	zmin zmax [mm]	hymin hzmin [mm]	AK AB [cm2]	MB	Tau-T Tau-B [1/m3]	Tau-Vy Tau-Vz [1/m2]
1.2E-05	-405.0	-350.0		5.910E+02		6.508E+02	2.058E+01
	405.0	350.0				1.189E+02	3.134E+01

Section values for warping

Wmin[cm2]	Wmax[cm2]	CM[cm6]	CMS[cm4]	ASwyy[cm6]	ASwzz[cm6]	ry[mm]	rz[mm]
-1326.38	1326.38	427502762.	651581.6	-3.01	-6.82	0.0	0.0

Design values of cross section

Mat NoR	A[cm2] It[cm4]	Ay/Az/Ayz [cm2]	Iy/Iz/Iyz [cm4]	ys/zs [mm]	modules [N/mm2]	gam [kN/m]
1	1069.60	607.50	903669.7	0.0	182609	8.40
	6270.0	288.17	398580.9	400.0	70234	

Design forces and moments
(C/E = characteristic plastic/elastic, D=plast.Design, F=elast. Design)

	N[kN]	Vy[kN]	Vz[kN]	Mt[kNm]	My[kNm]	Mz[kNm]	y[mm]	z[mm]	BUCK
C	35831.6	14099.76	6587.62	488.52	9866.45	5093.69	0.0	400.0	c d
C	0.0				0.00	0.00	0.0	0.0	COMB
E	35831.6	9399.84	6171.79	297.21	8649.41	3296.90	0.0	400.0	
D	31157.9	12260.66	5728.37	424.80	8579.52	4429.29	0.0	400.0	
D	0.0				0.00	0.00	0.0	0.0	COMB
F	31157.9	8173.78	5366.77	258.44	7521.22	2866.87	0.0	400.0	

Additional Design Data

M	periphery-O/-I [m2/m]	[m2/m]	deff [mm]	t-min [mm]	t-max [mm]	SMP [o/o]	thet-p [tm2/m]	thet-y [tm2/m]	thet-z [tm2/m]	thet-yz [tm2/m]
	4.550		47.0	45.0	52.0	0.0	0.102	0.071	0.031	

SOFiSTiK AG - www.sofistik.de

Composite bridge 38+50+38, b=14.25m, 2x2HL1100R HISTAR460 , slab 0.30m C30/37

Cross section No. 852.3 = CS 20 - in-situ conc:C2

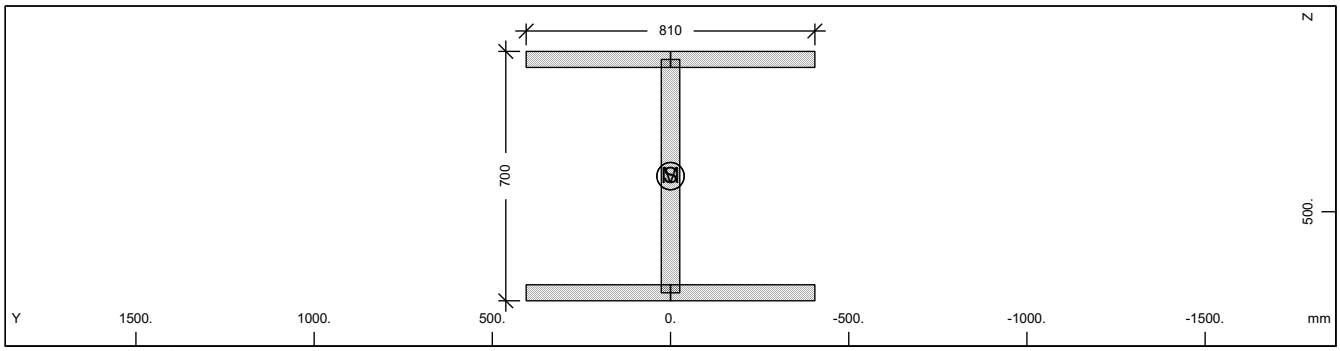

Cross section No. 852

Static properties of cross section

Mat NoR	A[cm2] It[cm4]	Ay/Az/Ayz [cm2]	Iy/Iz/Iyz [cm4]	ys/zs [mm]	modules [N/mm2]	gam [kN/m]
1	1069.60	607.50	903669.7	0.0	210000	8.40
	6270.0	288.17	398580.9	400.0	80769	

Additional static properties of cross section

Alfa-T [1/°K]	ymin ymax [mm]	zmin zmax [mm]	hymin hzmin [mm]	AK AB [cm2]	MB	Tau-T Tau-B [1/m3]	Tau-Vy Tau-Vz [1/m2]
1.2E-05	-405.0	-350.0		5.910E+02		6.508E+02	2.058E+01
	405.0	350.0				1.189E+02	3.134E+01

Section values for warping

Wmin[cm2]	Wmax[cm2]	CM[cm6]	CMS[cm4]	ASwyy[cm6]	ASwzz[cm6]	ry[mm]	rz[mm]
-1326.38	1326.38	427502762.	651581.6	-3.01	-6.82	0.0	0.0

Design values of cross section

Mat NoR	A[cm2] It[cm4]	Ay/Az/Ayz [cm2]	Iy/Iz/Iyz [cm4]	ys/zs [mm]	modules [N/mm2]	gam [kN/m]
1	1069.60	607.50	903669.7	0.0	182609	8.40
	6270.0	288.17	398580.9	400.0	70234	

Design forces and moments
(C/E = characteristic plastic/elastic, D=plast.Design, F=elast. Design)

	N[kN]	Vy[kN]	Vz[kN]	Mt[kNm]	My[kNm]	Mz[kNm]	y[mm]	z[mm]	BUCK
C	35831.6	14099.76	6587.62	488.52	9866.45	5093.69	0.0	400.0	c d
C	0.0				0.00	0.00	0.0	0.0	COMB
E	35831.6	9399.84	6171.79	297.21	8649.41	3296.90	0.0	400.0	
D	31157.9	12260.66	5728.37	424.80	8579.52	4429.29	0.0	400.0	
D	0.0				0.00	0.00	0.0	0.0	COMB
F	31157.9	8173.78	5366.77	258.44	7521.22	2866.87	0.0	400.0	

Additional Design Data

M	periphery-O/-I [m2/m] [m2/m]	deff [mm]	t-min [mm]	t-max [mm]	SMP [o/o]	thet-p [tm2/m]	thet-y [tm2/m]	thet-z [tm2/m]	thet-yz [tm2/m]
	4.550	47.0	45.0	52.0	0.0	0.102	0.071	0.031	

SOFiSTiK AG - www.sofistik.de

Composite bridge 38+50+38, b=14.25m, 2x2HL1100R HISTAR460 , slab 0.30m C30/37

Cross section No. 852.4 = CS 21 - reinf active:C2

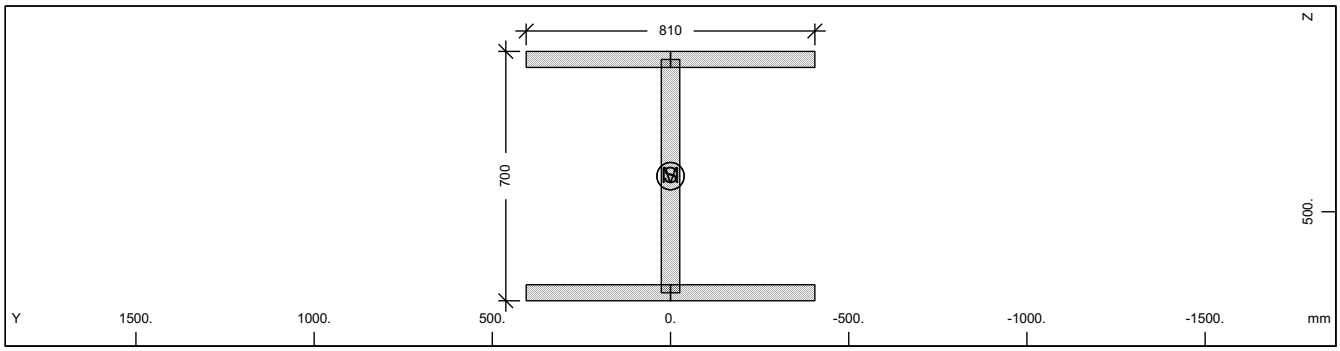

Cross section No. 852

Static properties of cross section

Mat NoR	A[cm2] It[cm4]	Ay/Az/Ayz [cm2]	Iy/Iz/Iyz [cm4]	ys/zs [mm]	modules [N/mm2]	gam [kN/m]
1	1069.60	607.50	903669.7	0.0	210000	8.40
	6270.0	288.17	398580.9	400.0	80769	

Additional static properties of cross section

Alfa-T [1/°K]	ymin ymax [mm]	zmin zmax [mm]	hymin hzmin [mm]	AK AB [cm2]	MB	Tau-T Tau-B [1/m3]	Tau-Vy Tau-Vz [1/m2]
1.2E-05	-405.0	-350.0		5.910E+02		6.508E+02	2.058E+01
	405.0	350.0				1.189E+02	3.134E+01

Section values for warping

Wmin[cm2]	Wmax[cm2]	CM[cm6]	CMS[cm4]	ASwyy[cm6]	ASwzz[cm6]	ry[mm]	rz[mm]
-1326.38	1326.38	427502762.	651581.6	-3.01	-6.82	0.0	0.0

Design values of cross section

Mat NoR	A[cm2] It[cm4]	Ay/Az/Ayz [cm2]	Iy/Iz/Iyz [cm4]	ys/zs [mm]	modules [N/mm2]	gam [kN/m]
1	1069.60	607.50	903669.7	0.0	182609	8.40
	6270.0	288.17	398580.9	400.0	70234	

Design forces and moments
(C/E = characteristic plastic/elastic, D=plast.Design, F=elast. Design)

	N[kN]	Vy[kN]	Vz[kN]	Mt[kNm]	My[kNm]	Mz[kNm]	y[mm]	z[mm]	BUCK
C	35831.6	14099.76	6587.62	488.52	9866.45	5093.69	0.0	400.0	c d
C	0.0				0.00	0.00	0.0	0.0	COMB
E	35831.6	9399.84	6171.79	297.21	8649.41	3296.90	0.0	400.0	
D	31157.9	12260.66	5728.37	424.80	8579.52	4429.29	0.0	400.0	
D	0.0				0.00	0.00	0.0	0.0	COMB
F	31157.9	8173.78	5366.77	258.44	7521.22	2866.87	0.0	400.0	

Additional Design Data

M	periphery-O/-I [m2/m] [m2/m]	deff [mm]	t-min [mm]	t-max [mm]	SMP [o/o]	thet-p [tm2/m]	thet-y [tm2/m]	thet-z [tm2/m]	thet-yz [tm2/m]
	4.550	47.0	45.0	52.0	0.0	0.102	0.071	0.031	

SOFiSTiK AG - www.sofistik.de

Composite bridge 38+50+38, b=14.25m, 2x2HL1100R HISTAR460 , slab 0.30m C30/37

Cross section No. 852.5 = CS 30 - in-situ conc:C3

Cross section No. 853 - VFT

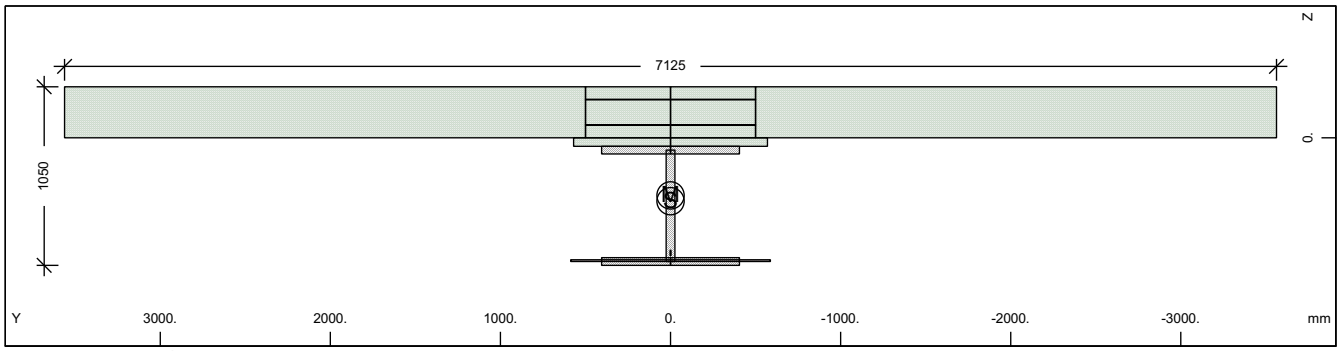

Cross section No. 853 - VFT

Static properties of cross section

Mat NoR	A[cm2] It[cm4]	Ay/Az/Ayz [cm2]	Iy/Iz/Iyz [cm4]	ys/zs [mm]	y/z-sc [mm]	modules [N/mm2]	gam [kN/m]
1	1135.99	645.43	1086280.2	0.0	0.0	210000	63.55
	6270.0	327.35	448426.4	372.9	338.9	80769	

Additional static properties of cross section

Alfa-T [1/°K]	ymin ymax [mm]	zmin zmax [mm]	hymin hzmin [mm]	AK AB [cm2]	MB	Tau-T Tau-B [1/m3]	Tau-Vy Tau-Vz [1/m2]
1.2E-05	-3562.5	-672.9		9.935E+01		1.715E+02	2.655E+01
	3562.5	377.1		2.206E+04		1.189E+02	2.907E+01

Section values for warping

Wmin[cm2]	Wmax[cm2]	CM[cm6]	CMS[cm4]	ASwyy[cm6]	ASwzz[cm6]	ry[mm]	rz[mm]
-17415.78	17415.78	564328746.	771743.0	0.60	1.46	0.0	40.8

Partial cross sections

Mat NoR	A[cm2] It[cm4]	Ay/Az/Ayz [cm2]	Iy/Iz/Iyz [cm4]	ys/zs [mm]	modules [N/mm2]	gam [kN/m]
1	1069.60	541.76	903669.7	0.0	210000	8.40
	7990.7	313.84	398580.9	400.0	80769	
25	117.40		9.8	0.0	10667	0.29
	539368.1	0.00	0.0	722.5	4444	
210	0.64	0.00	0.0	0.0	200000	0.00
	2.2	0.00	0.0	677.5	76923	
31	21945.00	81034377.	170028.4	0.0	0	54.86
	6417251.4	191356.89904880243.		-145.5	0	
300	62.80	108.42	3532.5	0.0	200000	0.00
	2.1	14.01	52333.3	-150.0	76923	

Design values of cross section

Mat NoR	A[cm2] It[cm4]	Ay/Az/Ayz [cm2]	Iy/Iz/Iyz [cm4]	ys/zs [mm]	modules [N/mm2]	gam [kN/m]
1	1134.59	645.34	1084577.3	0.0	182609	63.55
	6270.0	327.18	448425.4	372.5	70234	

Design forces and moments
(C/E = characteristic plastic/elastic, D=plast.Design, F=elast. Design)

	N[kN]	Vy[kN]	Vz[kN]	Mt[kNm]	My[kNm]	Mz[kNm]	y[mm]	z[mm]	BUCK
C	39003.8	52140.45	36043.66	99179.80	22340.65	60206.52	279.8	-131.	c c
C	-68069.4				45787.38	0.00	0.0	372.9	COMB
C	-33093.6				0.00	63285.64	0.0	0.0	COMB
C	262309.1	52140.45	36043.66	99179.79	-11470.1	-60108.0	-280.	319.4	
C	1882.2				-11539.4	0.00	0.0	372.9	COMB
C	-33093.6				0.00	-63285.6	0.0	0.0	COMB
E	38055.5	10575.36	6652.62	96.23	9538.58	3709.21	0.0	372.9	

SOFiSTiK AG - www.sofistik.de

Composite bridge 38+50+38, b=14.25m, 2x2HL1100R HISTAR460 , slab 0.30m C30/37

Design forces and moments
(C/E = characteristic plastic/elastic, D=plast.Design, F=elast. Design)

	N[kN]	Vy[kN]	Vz[kN]	Mt[kNm]	My[kNm]	Mz[kNm]	y[mm]	z[mm]	BUCK
E	-38055.5	10575.36	6652.62	96.23	-9538.58	-3709.21	0.0	372.9	
D	33916.3	37992.72	25995.66	66234.62	18630.17	42170.82	186.1	-81.2	
D	-45818.5				32864.53	0.00	0.0	372.9	COMB
D	-22062.4				0.00	43383.25	0.0	0.0	COMB
D	166958.9	37992.72	25995.66	66234.62	-9972.46	-42127.1	-186.	317.5	
D	1693.7				-10032.5	0.00	0.0	372.9	COMB
D	-22062.4				0.00	-43383.3	0.0	0.0	COMB
F	33091.7	9195.97	5784.89	64.15	8294.41	3225.40	0.0	372.9	
F	-33091.7	9195.97	5784.89	64.15	-8294.41	-3225.40	0.0	372.9	

Additional Design Data

M	periphery-O/-I [m2/m]	[m2/m]	deff [mm]	t-min [mm]	t-max [mm]	SMP [o/o]	thet-p [tm2/m]	thet-y [tm2/m]	thet-z [tm2/m]	thet-yz [tm2/m]
	25.104		9.1	3.1	300.0	0.0	22.964	0.310	22.653	
1	4.550		47.0	45.0	52.0	0.0	0.102	0.071	0.031	
25	0.020		1174.0			0.0	0.000	0.000		
**	0.004		32.0			0.0	0.000		0.000	
31	16.530		265.5	50.0	300.0	0.0	22.626	0.004	22.622	
**	4.000		3.1	3.1	3.1	0.0	0.000	0.000	0.000	

Cross section No. 853.1 = CS 1 - steel alone

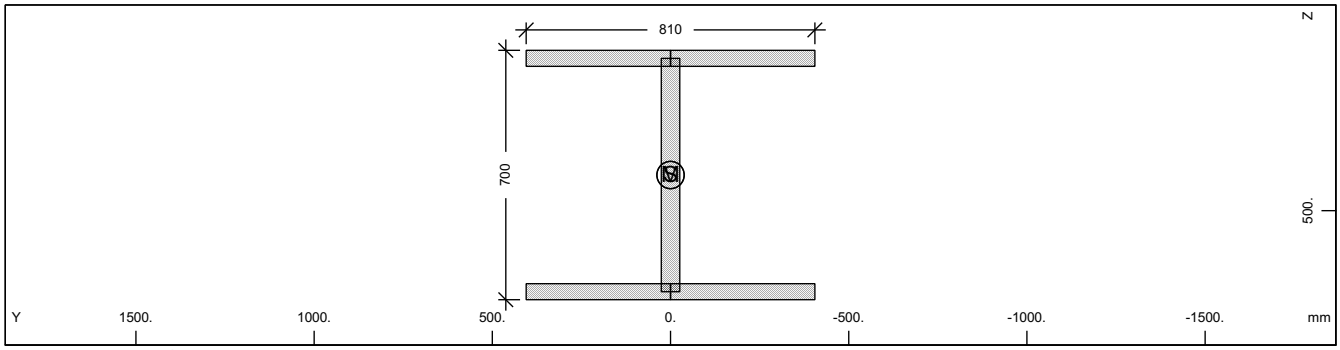

Cross section No. 853

Static properties of cross section

Mat NoR	A[cm2] It[cm4]	Ay/Az/Ayz [cm2]	Iy/Iz/Iyz [cm4]	ys/zs [mm]	modules [N/mm2]	gam [kN/m]
1	1069.60	607.50	903669.7	0.0	210000	8.40
	6270.0	288.17	398580.9	400.0	80769	

Additional static properties of cross section

Alfa-T [1/°K]	ymin ymax [mm]	zmin zmax [mm]	hymin hzmin [mm]	AK AB [cm2]	MB	Tau-T Tau-B [1/m3]	Tau-Vy Tau-Vz [1/m2]
1.2E-05	-405.0	-350.0		5.910E+02		6.508E+02	2.058E+01
	405.0	350.0				1.189E+02	3.134E+01

Section values for warping

Wmin[cm2]	Wmax[cm2]	CM[cm6]	CMS[cm4]	ASwyy[cm6]	ASwzz[cm6]	ry[mm]	rz[mm]
-1326.38	1326.38	427502762.	651581.6	-3.01	-6.82	0.0	0.0

Design values of cross section

Mat NoR	A[cm2] It[cm4]	Ay/Az/Ayz [cm2]	Iy/Iz/Iyz [cm4]	ys/zs [mm]	modules [N/mm2]	gam [kN/m]
1	1069.60	607.50	903669.7	0.0	182609	8.40
	6270.0	288.17	398580.9	400.0	70234	

SOFiSTiK AG - www.sofistik.de

Composite bridge 38+50+38, b=14.25m, 2x2HL1100R HISTAR460 , slab 0.30m C30/37

Design forces and moments
(C/E = characteristic plastic/elastic, D=plast.Design, F=elast. Design)

	N[kN]	Vy[kN]	Vz[kN]	Mt[kNm]	My[kNm]	Mz[kNm]	y[mm]	z[mm]	BUCK
C	35831.6	14099.76	6587.62	488.52	9866.45	5093.69	0.0	400.0	c d
C	0.0				0.00	0.00	0.0	0.0	COMB
E	35831.6	9399.84	6171.79	297.21	8649.41	3296.90	0.0	400.0	
D	31157.9	12260.66	5728.37	424.80	8579.52	4429.29	0.0	400.0	
D	0.0				0.00	0.00	0.0	0.0	COMB
F	31157.9	8173.78	5366.77	258.44	7521.22	2866.87	0.0	400.0	

Additional Design Data

M	periphery-O/-I [m2/m]	[m2/m]	deff [mm]	t-min [mm]	t-max [mm]	SMP [o/o]	thet-p [tm2/m]	thet-y [tm2/m]	thet-z [tm2/m]	thet-yz [tm2/m]
	4.550		47.0	45.0	52.0	0.0	0.102	0.071	0.031	

Cross section No. 853.2 = CS 10 - prefab. slab C1

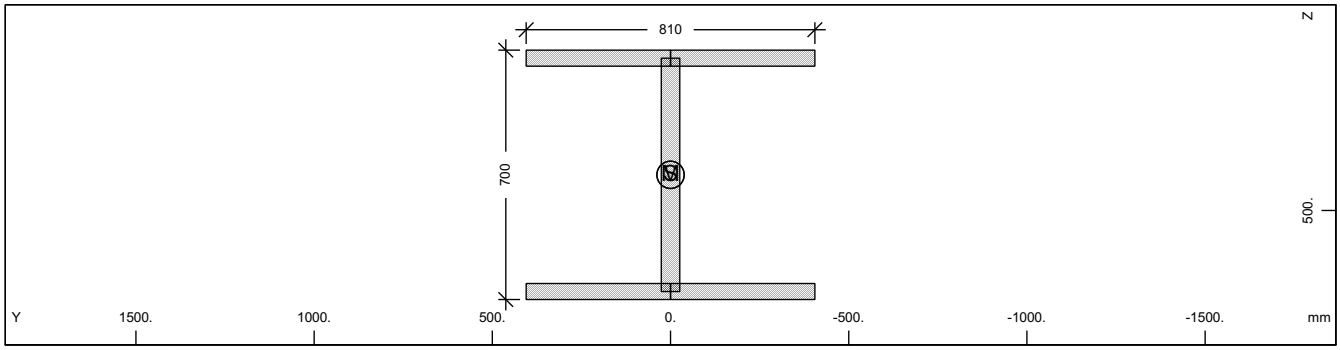

Cross section No. 853

Static properties of cross section

Mat NoR	A[cm2] It[cm4]	Ay/Az/Ayz [cm2]	Iy/Iz/Iyz [cm4]	ys/zs [mm]	modules [N/mm2]	gam [kN/m]
1	1069.60	607.50	903669.7	0.0	210000	8.40
	6270.0	288.17	398580.9	400.0	80769	

Additional static properties of cross section

Alfa-T [1/°K]	ymin ymax [mm]	zmin zmax [mm]	hymin hzmin [mm]	AK AB [cm2]	MB	Tau-T Tau-B [1/m3]	Tau-Vy Tau-Vz [1/m2]
1.2E-05	-405.0	-350.0		5.910E+02		6.508E+02	2.058E+01
	405.0	350.0				1.189E+02	3.134E+01

Section values for warping

Wmin[cm2]	Wmax[cm2]	CM[cm6]	CMS[cm4]	ASwyy[cm6]	ASwzz[cm6]	ry[mm]	rz[mm]
-1326.38	1326.38	427502762.	651581.6	-3.01	-6.82	0.0	0.0

Design values of cross section

Mat NoR	A[cm2] It[cm4]	Ay/Az/Ayz [cm2]	Iy/Iz/Iyz [cm4]	ys/zs [mm]	modules [N/mm2]	gam [kN/m]
1	1069.60	607.50	903669.7	0.0	182609	8.40
	6270.0	288.17	398580.9	400.0	70234	

Design forces and moments
(C/E = characteristic plastic/elastic, D=plast.Design, F=elast. Design)

	N[kN]	Vy[kN]	Vz[kN]	Mt[kNm]	My[kNm]	Mz[kNm]	y[mm]	z[mm]	BUCK
C	35831.6	14099.76	6587.62	488.52	9866.45	5093.69	0.0	400.0	c d
C	0.0				0.00	0.00	0.0	0.0	COMB
E	35831.6	9399.84	6171.79	297.21	8649.41	3296.90	0.0	400.0	
D	31157.9	12260.66	5728.37	424.80	8579.52	4429.29	0.0	400.0	
D	0.0				0.00	0.00	0.0	0.0	COMB
F	31157.9	8173.78	5366.77	258.44	7521.22	2866.87	0.0	400.0	

SOFiSTiK AG - www.sofistik.de

Composite bridge 38+50+38, b=14.25m, 2x2HL1100R HISTAR460 , slab 0.30m C30/37

Additional Design Data

M	periphery-O/-I [m2/m]	[m2/m]	deff [mm]	t-min [mm]	t-max [mm]	SMP [o/o]	thet-p [tm2/m]	thet-y [tm2/m]	thet-z [tm2/m]	thet-yz [tm2/m]
	4.550		47.0	45.0	52.0	0.0	0.102	0.071	0.031	

Cross section No. 853.3 = CS 20 - in-situ conc:C2

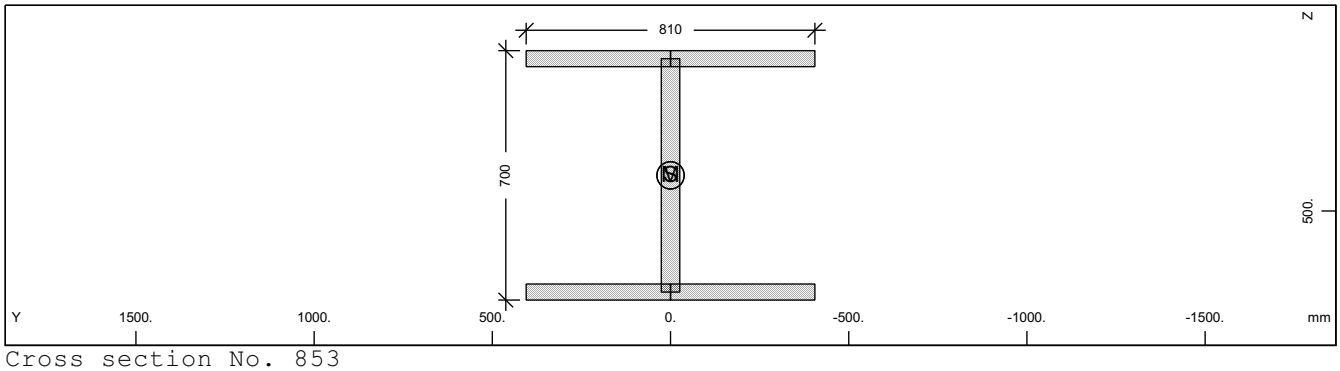

Cross section No. 853

Static properties of cross section

Mat NoR	A[cm2] It[cm4]	Ay/Az/Ayz [cm2]	Iy/Iz/Iyz [cm4]	ys/zs [mm]	modules [N/mm2]	gam [kN/m]
1	1069.60	607.50	903669.7	0.0	210000	8.40
	6270.0	288.17	398580.9	400.0	80769	

Additional static properties of cross section

Alfa-T [1/°K]	ymin ymax [mm]	zmin zmax [mm]	hymin hzmin [mm]	AK AB [cm2]	MB	Tau-T Tau-B [1/m3]	Tau-Vy Tau-Vz [1/m2]
1.2E-05	-405.0	-350.0		5.910E+02		6.508E+02	2.058E+01
	405.0	350.0				1.189E+02	3.134E+01

Section values for warping

Wmin[cm2]	Wmax[cm2]	CM[cm6]	CMS[cm4]	ASwyy[cm6]	ASwzz[cm6]	ry[mm]	rz[mm]
-1326.38	1326.38	427502762.	651581.6	-3.01	-6.82	0.0	0.0

Design values of cross section

Mat NoR	A[cm2] It[cm4]	Ay/Az/Ayz [cm2]	Iy/Iz/Iyz [cm4]	ys/zs [mm]	modules [N/mm2]	gam [kN/m]
1	1069.60	607.50	903669.7	0.0	182609	8.40
	6270.0	288.17	398580.9	400.0	70234	

Design forces and moments
(C/E = characteristic plastic/elastic, D=plast.Design, F=elast. Design)

	N[kN]	Vy[kN]	Vz[kN]	Mt[kNm]	My[kNm]	Mz[kNm]	y[mm]	z[mm]	BUCK
C	35831.6	14099.76	6587.62	488.52	9866.45	5093.69	0.0	400.0	c d
C	0.0				0.00	0.00	0.0	0.0	COMB
E	35831.6	9399.84	6171.79	297.21	8649.41	3296.90	0.0	400.0	
D	31157.9	12260.66	5728.37	424.80	8579.52	4429.29	0.0	400.0	
D	0.0				0.00	0.00	0.0	0.0	COMB
F	31157.9	8173.78	5366.77	258.44	7521.22	2866.87	0.0	400.0	

Additional Design Data

M	periphery-O/-I [m2/m]	[m2/m]	deff [mm]	t-min [mm]	t-max [mm]	SMP [o/o]	thet-p [tm2/m]	thet-y [tm2/m]	thet-z [tm2/m]	thet-yz [tm2/m]
	4.550		47.0	45.0	52.0	0.0	0.102	0.071	0.031	

SOFiSTiK AG - www.sofistik.de

Composite bridge 38+50+38, b=14.25m, 2x2HL1100R HISTAR460 , slab 0.30m C30/37

Cross section No. 853.4 = CS 21 - reinf active:C2

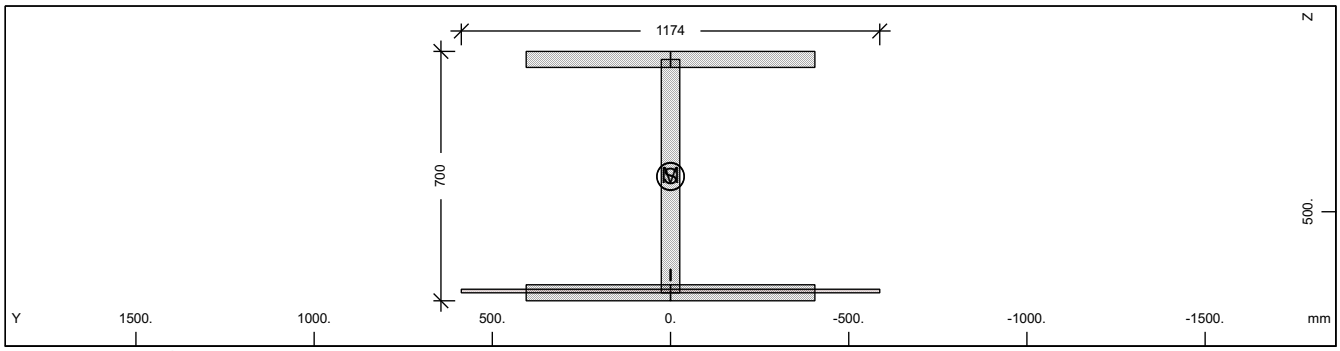

Cross section No. 853

Static properties of cross section

Mat NoR	A[cm2] It[cm4]	Ay/Az/Ayz [cm2]	Iy/Iz/Iyz [cm4]	ys/zs [mm]	modules [N/mm2]	gam [kN/m]
1	1076.18	607.50	910303.2	0.0	210000	8.69
	6270.0	288.72	398580.9	401.9	80769	

Additional static properties of cross section

Alfa-T [1/°K]	ymin ymax [mm]	zmin zmax [mm]	hymin hzmin [mm]	AK AB [cm2]	MB	Tau-T Tau-B [1/m3]	Tau-Vy Tau-Vz [1/m2]
1.2E-05	-587.0	-351.9		9.934E+01		1.715E+02	2.058E+01
	587.0	348.1		1.174E+02		1.189E+02	3.133E+01

Section values for warping

Wmin[cm2]	Wmax[cm2]	CM[cm6]	CMS[cm4]	ASwyy[cm6]	ASwzz[cm6]	ry[mm]	rz[mm]
-1326.38	1326.38	427502820.	651581.7	-1.15	-2.63	0.0	-0.5

Partial cross sections

Mat NoR	A[cm2] It[cm4]	Ay/Az/Ayz [cm2]	Iy/Iz/Iyz [cm4]	ys/zs [mm]	modules [N/mm2]	gam [kN/m]
1	1069.60	607.50	903669.7	0.0	210000	8.40
	7990.7	288.72	398580.9	400.0	80769	
25	117.40		9.8	0.0	10667	0.29
	539368.1	0.00	0.0	722.5	4444	
210	0.64	0.00	0.0	0.0	200000	0.00
	2.2	0.00	0.0	677.5	76923	

Design values of cross section

Mat NoR	A[cm2] It[cm4]	Ay/Az/Ayz [cm2]	Iy/Iz/Iyz [cm4]	ys/zs [mm]	modules [N/mm2]	gam [kN/m]
1	1074.78	607.50	908871.5	0.0	182609	8.69
	6270.0	288.72	398580.9	401.5	70234	

Design forces and moments
(C/E = characteristic plastic/elastic, D=plast.Design, F=elast. Design)

	N[kN]	Vy[kN]	Vz[kN]	Mt[kNm]	My[kNm]	Mz[kNm]	y[mm]	z[mm]	BUCK
C	35863.8	14118.33	7243.22	609.92	9999.89	5145.57	0.3	398.7	c c
C	-115.5				9998.92	0.00	0.0	401.9	COMB
C	-176.1				0.00	5145.63	0.0	0.0	COMB
C	-36216.0	14118.33	7243.22	609.92	-9887.60	-5145.48	-0.3	408.7	
C	-236.7				-9886.02	0.00	0.0	401.9	COMB
C	-176.1				0.00	-5145.63	0.0	0.0	COMB
E	36051.9	9399.84	6173.45	96.22	8664.75	3296.90	0.0	401.9	
E	-36051.9	9399.84	6173.45	96.22	-8664.75	-3296.90	0.0	401.9	
D	31185.9	12276.81	6259.15	507.29	8670.18	4463.89	0.2	399.2	
D	-84.3				8669.65	0.00	0.0	401.9	COMB
D	-117.4				0.00	4463.97	0.0	0.0	COMB
D	-31420.7	12276.81	6259.15	507.29	-8595.17	-4463.85	-0.2	406.9	
D	-150.5				-8594.38	0.00	0.0	401.9	COMB
D	-117.4				0.00	-4463.97	0.0	0.0	COMB

SOFiSTiK AG - www.sofistik.de

Composite bridge 38+50+38, b=14.25m, 2x2HL1100R HISTAR460 , slab 0.30m C30/37

Design forces and moments
(C/E = characteristic plastic/elastic, D=plast.Design, F=elast. Design)

	N[kN]	Vy[kN]	Vz[kN]	Mt[kNm]	My[kNm]	Mz[kNm]	y[mm]	z[mm]	BUCK
F	31349.5	8173.78	5368.22	64.15	7534.57	2866.87	0.0	401.9	
F	-31349.5	8173.78	5368.22	64.15	-7534.57	-2866.87	0.0	401.9	

Additional Design Data

M	periphery-O/-I [m2/m]	[m2/m]	deff [mm]	t-min [mm]	t-max [mm]	SMP [o/o]	thet-p [tm2/m]	thet-y [tm2/m]	thet-z [tm2/m]	thet-yz [tm2/m]
	4.574		47.1	32.0	52.0	0.0	0.105	0.074	0.031	
1	4.550		47.0	45.0	52.0	0.0	0.102	0.071	0.031	
25	0.020		1174.0			0.0	0.000	0.000		
**	0.004		32.0			0.0	0.000		0.000	

Cross section No. 853.5 = CS 30 - in-situ conc:C3

Bore Profile No. 1

X[m]	Y[m]	Z[m]	dX[-]	dY[-]	dZ[-]	a[°]
0.000	0.000	12.000	0.000	0.000	1.000	0.0

s[m]	K0-t [kN/m2]	K1-t [kN/m2]	K2-t [kN/m2]	K3-t [kN/m2]	P0 [-]	P1 [-]	P2 [-]	P3 [-]	Pmax [kN/m]
0.000			45000.00		1.00	1.00	1.00	1.00	0.00
5.000									0.00
5.000	45000.00				1.00	1.00	1.00	1.00	0.00
30.000									0.00

Bore Profile No. 2

X[m]	Y[m]	Z[m]	dX[-]	dY[-]	dZ[-]	a[°]
38.000	0.000	12.000	0.000	0.000	1.000	0.0

s[m]	K0-t [kN/m2]	K1-t [kN/m2]	K2-t [kN/m2]	K3-t [kN/m2]	P0 [-]	P1 [-]	P2 [-]	P3 [-]	Pmax [kN/m]
0.000			45000.00		1.00	1.00	1.00	1.00	0.00
5.000									0.00
5.000	45000.00				1.00	1.00	1.00	1.00	0.00
30.000									0.00

Bore Profile No. 3

X[m]	Y[m]	Z[m]	dX[-]	dY[-]	dZ[-]	a[°]
88.000	0.000	12.000	0.000	0.000	1.000	0.0

s[m]	K0-t [kN/m2]	K1-t [kN/m2]	K2-t [kN/m2]	K3-t [kN/m2]	P0 [-]	P1 [-]	P2 [-]	P3 [-]	Pmax [kN/m]
0.000			45000.00		1.00	1.00	1.00	1.00	0.00
5.000									0.00
5.000	45000.00				1.00	1.00	1.00	1.00	0.00
30.000									0.00

Bore Profile No. 4

X[m]	Y[m]	Z[m]	dX[-]	dY[-]	dZ[-]	a[°]
126.000	0.000	12.000	0.000	0.000	1.000	0.0

s[m]	K0-t [kN/m2]	K1-t [kN/m2]	K2-t [kN/m2]	K3-t [kN/m2]	P0 [-]	P1 [-]	P2 [-]	P3 [-]	Pmax [kN/m]
0.000			45000.00		1.00	1.00	1.00	1.00	0.00
5.000									0.00
5.000	45000.00				1.00	1.00	1.00	1.00	0.00
30.000									0.00

Bore Profile No. 5

X[m]	Y[m]	Z[m]	dX[-]	dY[-]	dZ[-]	a[°]
203.000	0.000	12.000	0.000	0.000	1.000	0.0

s[m]	K0-t [kN/m2]	K1-t [kN/m2]	K2-t [kN/m2]	K3-t [kN/m2]	P0 [-]	P1 [-]	P2 [-]	P3 [-]	Pmax [kN/m]
0.000			45000.00		1.00	1.00	1.00	1.00	0.00
5.000									0.00
5.000	45000.00				1.00	1.00	1.00	1.00	0.00
30.000									0.00

SOFiSTiK AG - www.sofistik.de

Composite bridge 38+50+38, b=14.25m, 2x2HL1100R HISTAR460 , slab 0.30m C30/37

Bore Profile No. 6

X[m]	Y[m]	Z[m]	dX[-]	dY[-]	dZ[-]	a[°]
238.000	0.000	12.000	0.000	0.000	1.000	0.0

s[m]	K0-t [kN/m2]	K1-t [kN/m2]	K2-t [kN/m2]	K3-t [kN/m2]	P0 [-]	P1 [-]	P2 [-]	P3 [-]	Pmax [kN/m]
0.000			45000.00		1.00	1.00	1.00	1.00	0.00
5.000									0.00
5.000	45000.00				1.00	1.00	1.00	1.00	0.00
30.000									0.00

Bore Profile No. 7

X[m]	Y[m]	Z[m]	dX[-]	dY[-]	dZ[-]	a[°]
270.000	0.000	20.000	0.000	0.000	1.000	0.0

s[m]	K0-t [kN/m2]	K1-t [kN/m2]	K2-t [kN/m2]	K3-t [kN/m2]	P0 [-]	P1 [-]	P2 [-]	P3 [-]	Pmax [kN/m]
0.000			70110.00		1.00	1.00	1.00	1.00	0.00
5.000									0.00
5.000	70110.00				1.00	1.00	1.00	1.00	0.00
30.000									0.00

Bore Profile No. 8

X[m]	Y[m]	Z[m]	dX[-]	dY[-]	dZ[-]	a[°]
300.000	0.000	20.000	0.000	0.000	1.000	0.0

s[m]	K0-t [kN/m2]	K1-t [kN/m2]	K2-t [kN/m2]	K3-t [kN/m2]	P0 [-]	P1 [-]	P2 [-]	P3 [-]	Pmax [kN/m]
0.000			120000.0		1.00	1.00	1.00	1.00	0.00
5.000									0.00
5.000	120000.0				1.00	1.00	1.00	1.00	0.00
30.000									0.00

Bore Profile No. 9

X[m]	Y[m]	Z[m]	dX[-]	dY[-]	dZ[-]	a[°]
344.000	0.000	20.000	0.000	0.000	1.000	0.0

s[m]	K0-t [kN/m2]	K1-t [kN/m2]	K2-t [kN/m2]	K3-t [kN/m2]	P0 [-]	P1 [-]	P2 [-]	P3 [-]	Pmax [kN/m]
0.000			120000.0		1.00	1.00	1.00	1.00	0.00
5.000									0.00
5.000	120000.0				1.00	1.00	1.00	1.00	0.00
30.000									0.00

SOFiSTiK AG - www.sofistik.de

Composite bridge 38+50+38, b=14.25m, 2x2HL1100R HISTAR460 , slab 0.30m C30/37

Geometric axis 1

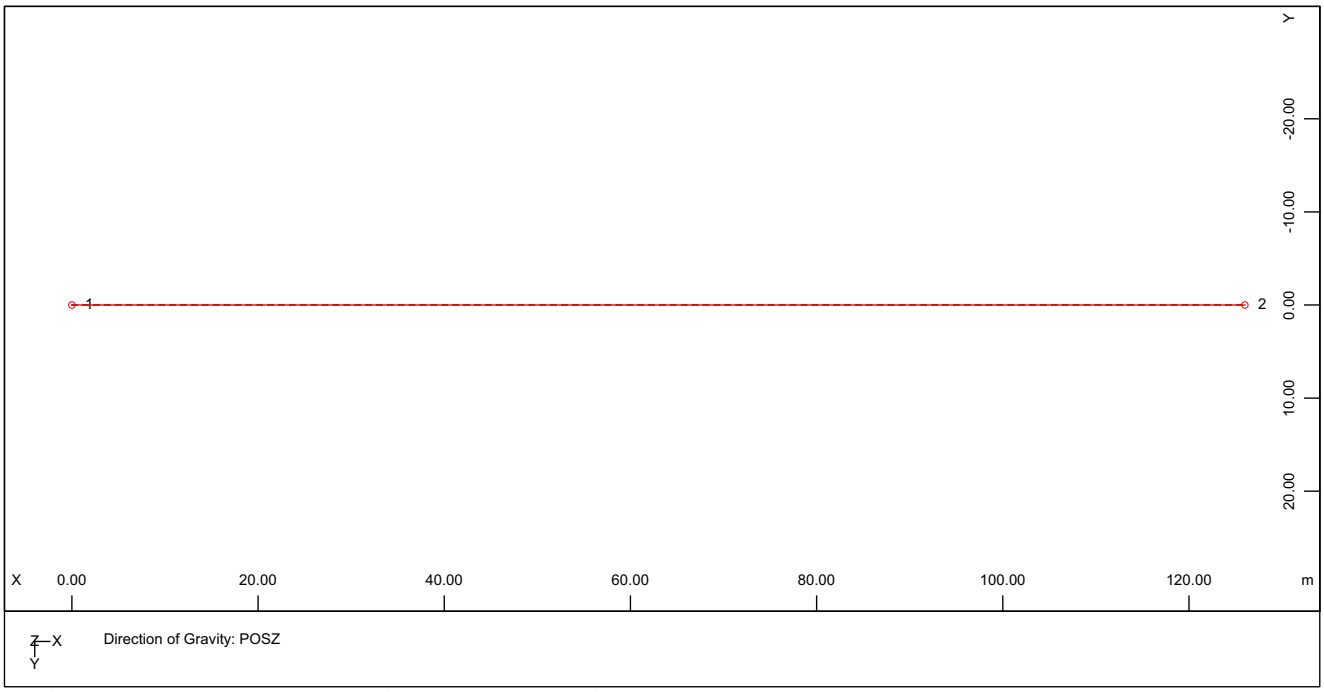

Design elements - Plan view of the axis

Design elements - Plan view of the axis

Tangential intersection points

	Title	S[-]	X[m]	Y[m]	R[m]	La[m]	Le[m]	Tau[°]
IP	1	0.0000	0.0000	0.0000				
IP	2	126.0000	126.0000	0.0000				

Segments

		S[-]	X[m]	Y[m]	L[m]	Ra[m]	Re[m]	A
IP	straight	0.0000	0.0000	0.0000	126.0000			
IP		126.0000	126.0000	0.0000				

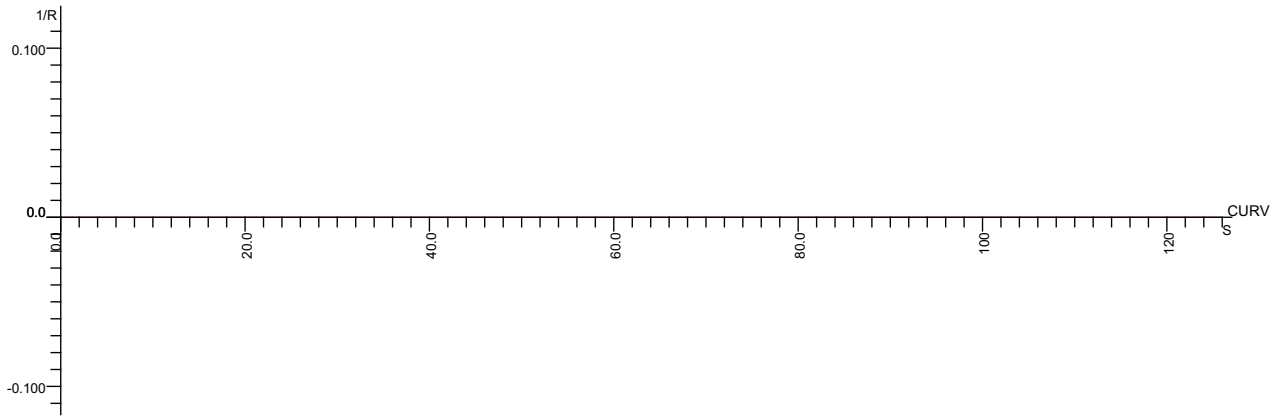

Curvature

Variables

SOFiSTiK AG - www.sofistik.de

Composite bridge 38+50+38, b=14.25m, 2x2HL1100R HISTAR460 , slab 0.30m C30/37

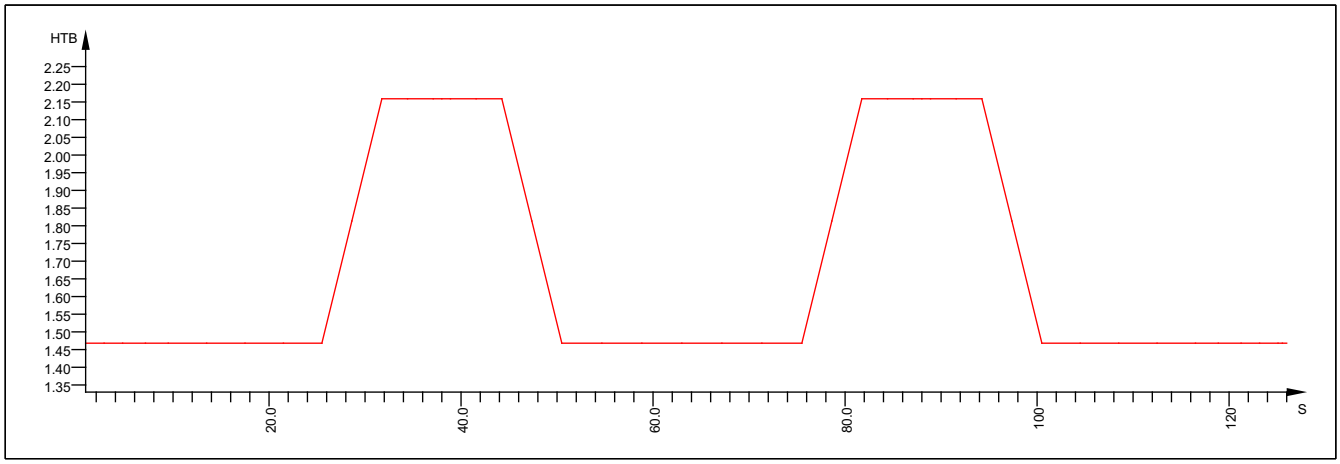

HTB

S[-]	V[-]	DV[-]	TYP
0.900	1.468	0.000	POLY
4.750	1.468	0.000	POLY
9.500	1.468	0.000	POLY
25.500	1.468	0.111	POLY
31.750	2.159	0.000	POLY
37.100	2.159	0.000	POLY
38.900	2.159	0.000	POLY
44.250	2.159	-0.111	POLY
50.500	1.468	0.000	POLY
75.500	1.468	0.111	POLY
81.750	2.159	0.000	POLY
87.100	2.159	0.000	POLY
88.900	2.159	0.000	POLY
94.250	2.159	-0.111	POLY
100.500	1.468	0.000	POLY
116.500	1.468	0.000	POLY
121.250	1.468	0.000	POLY
125.100	1.468	0.000	POLY

Extended information

S[-]	V[-]	DV[-]
0.900	1.468	0.000
2.825	1.468	0.000
4.750	1.468	0.000
7.125	1.468	0.000
9.500	1.468	0.000
13.500	1.468	0.000
17.500	1.468	0.000
21.500	1.468	0.000
25.500	1.468	0.111
28.625	1.813	0.111
31.750	2.159	0.000
34.425	2.159	0.000
37.100	2.159	0.000
38.000	2.159	0.000
38.900	2.159	0.000
41.575	2.159	0.000
44.250	2.159	-0.111
47.375	1.814	-0.111
50.500	1.468	0.000
54.667	1.468	0.000
58.833	1.468	0.000
63.000	1.468	0.000
67.167	1.468	0.000
71.333	1.468	0.000
75.500	1.468	0.111
78.625	1.813	0.111
81.750	2.159	0.000

SOFiSTiK AG - www.sofistik.de

Composite bridge 38+50+38, b=14.25m, 2x2HL1100R HISTAR460 , slab 0.30m C30/37

Variables

84.425	2.159	0.000
87.100	2.159	0.000
88.000	2.159	0.000
88.900	2.159	0.000
91.575	2.159	0.000
94.250	2.159	-0.111
97.375	1.814	-0.111
100.500	1.468	0.000
104.500	1.468	0.000
108.500	1.468	0.000
112.500	1.468	0.000
116.500	1.468	0.000
118.875	1.468	0.000
121.250	1.468	0.000
123.175	1.468	0.000
125.100	1.468	0.000
125.550	1.468	0.000
126.000	1.468	0.000

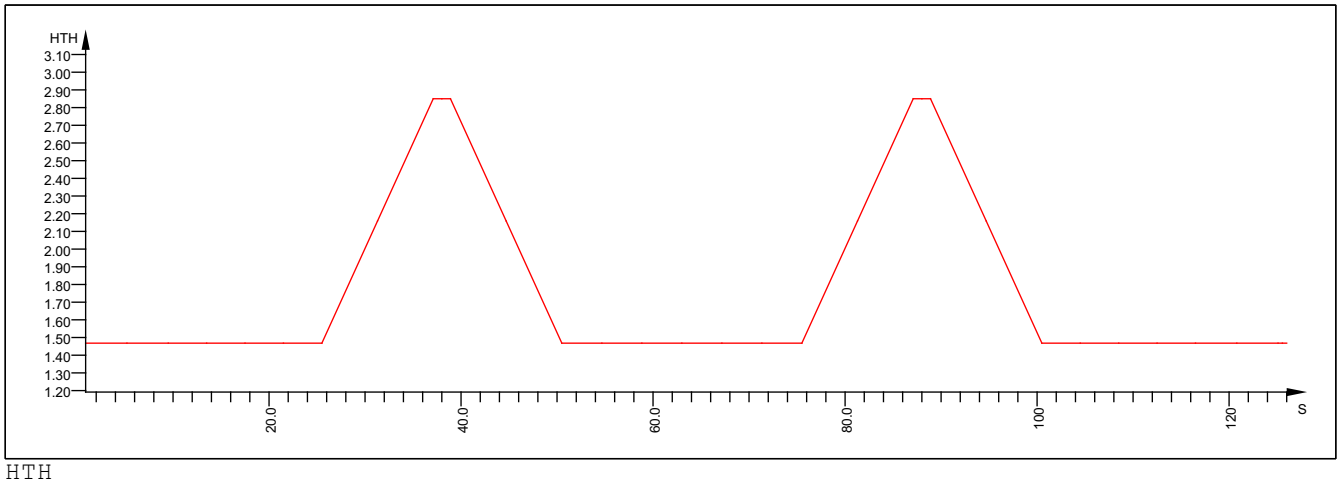

HTH

S[-]	V[-]	DV[-]	TYP
0.900	1.468	0.000	POLY
9.500	1.468	0.000	POLY
25.500	1.468	0.119	POLY
37.100	2.850	0.000	POLY
38.900	2.850	-0.119	POLY
50.500	1.468	0.000	POLY
75.500	1.468	0.119	POLY
87.100	2.850	0.000	POLY
88.900	2.850	-0.119	POLY
100.500	1.468	0.000	POLY
116.500	1.468	0.000	POLY
125.100	1.468	0.000	POLY

Extended information

S[-]	V[-]	DV[-]
0.900	1.468	0.000
5.200	1.468	0.000
9.500	1.468	0.000
13.500	1.468	0.000
17.500	1.468	0.000
21.500	1.468	0.000
25.500	1.468	0.119
31.300	2.159	0.119
37.100	2.850	0.000
38.000	2.850	0.000
38.900	2.850	-0.119
44.700	2.159	-0.119
50.500	1.468	0.000

SOFiSTiK AG - www.sofistik.de

Composite bridge 38+50+38, b=14.25m, 2x2HL1100R HISTAR460 , slab 0.30m C30/37

Variables

54.667	1.468	0.000
58.833	1.468	0.000
63.000	1.468	0.000
67.167	1.468	0.000
71.333	1.468	0.000
75.500	1.468	0.119
81.300	2.159	0.119
87.100	2.850	0.000
88.000	2.850	0.000
88.900	2.850	-0.119
94.700	2.159	-0.119
100.500	1.468	0.000
104.500	1.468	0.000
108.500	1.468	0.000
112.500	1.468	0.000
116.500	1.468	0.000
120.800	1.468	0.000
125.100	1.468	0.000
125.550	1.468	0.000
126.000	1.468	0.000

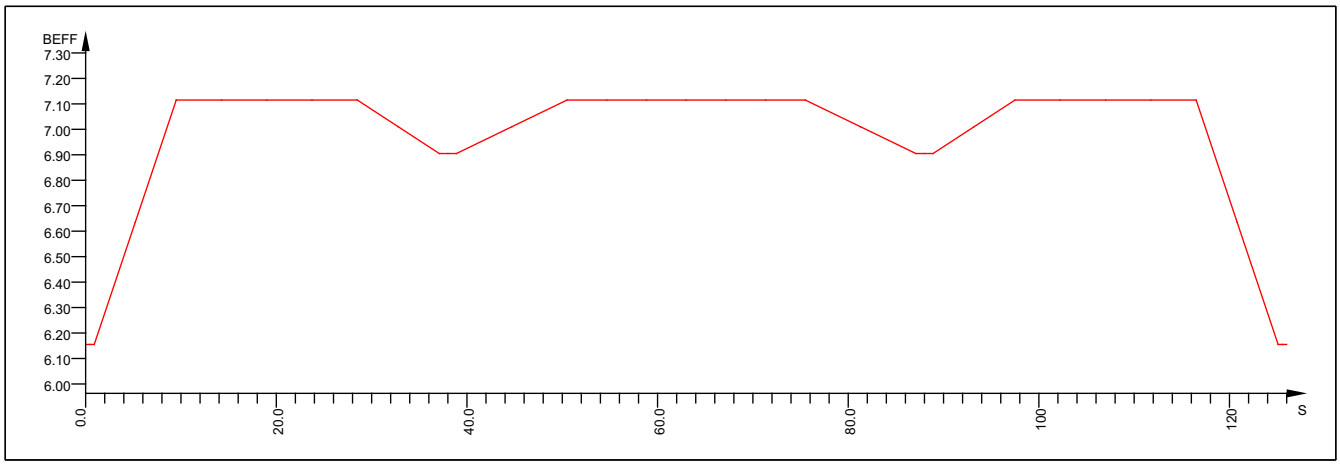

BEFF

S[-]	V[-]	DV[-]	TYP
0.000	6.155	0.000	POLY
0.900	6.155	0.112	POLY
9.500	7.115	0.000	POLY
28.500	7.115	-0.024	POLY
37.100	6.905	0.000	POLY
38.900	6.905	0.018	POLY
50.500	7.115	0.000	POLY
75.500	7.115	-0.018	POLY
87.100	6.905	0.000	POLY
88.900	6.905	0.024	POLY
97.500	7.115	0.000	POLY
116.500	7.115	-0.112	POLY
125.100	6.155	0.000	POLY

Extended information

S[-]	V[-]	DV[-]
0.000	6.155	0.000
0.450	6.155	0.000
0.900	6.155	0.112
5.200	6.635	0.112
9.500	7.115	0.000
14.250	7.115	0.000
19.000	7.115	0.000
23.750	7.115	0.000
28.500	7.115	-0.024
32.800	7.010	-0.024

SOFiSTiK AG - www.sofistik.de

Composite bridge 38+50+38, b=14.25m, 2x2HL1100R HISTAR460 , slab 0.30m C30/37

Variables

37.100	6.905	0.000
38.000	6.905	0.000
38.900	6.905	0.018
44.700	7.010	0.018
50.500	7.115	0.000
54.667	7.115	0.000
58.833	7.115	0.000
63.000	7.115	0.000
67.167	7.115	0.000
71.333	7.115	0.000
75.500	7.115	-0.018
81.300	7.010	-0.018
87.100	6.905	0.000
88.000	6.905	0.000
88.900	6.905	0.024
93.200	7.010	0.024
97.500	7.115	0.000
102.250	7.115	0.000
107.000	7.115	0.000
111.750	7.115	0.000
116.500	7.115	-0.112
120.800	6.635	-0.112
125.100	6.155	0.000
125.550	6.155	0.000
126.000	6.155	0.000

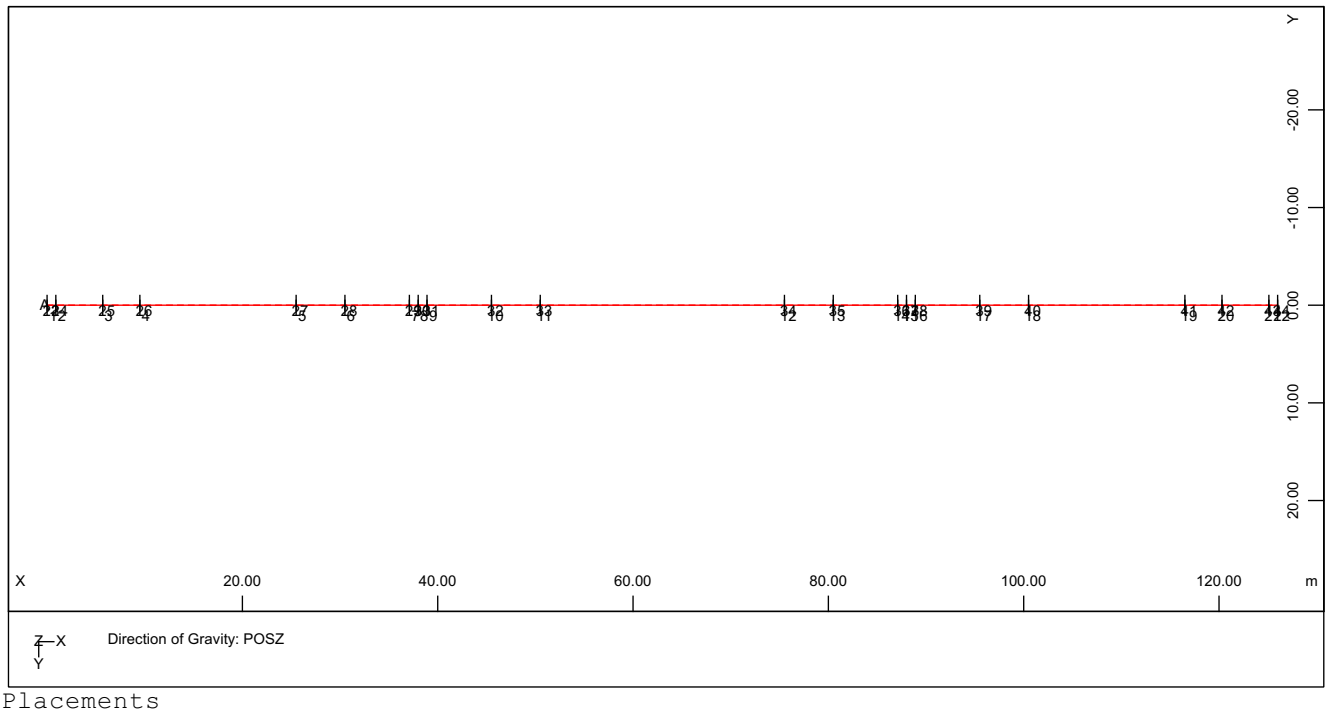

Placements

Placements
Input data

	S[-]	TYP	IDS	NPT	GRP	NOS	ALF[°]	ALFZ[°]	INCR[o/o]	I
1:	0.0000	S	0	1010						
2:	0.9000	S	0	1011						
3:	5.7000	S	0	21012						
4:	9.5000	S	0	1012						
5:	25.5000	S	0	1013						
6:	30.5000	S	0	21013						
7:	37.1000	S	0	1014						
8:	38.0000	S	0	2010						
9:	38.9000	S	0	2011						
10:	45.5000	S	0	22012						
11:	50.5000	S	0	2012						

SOFiSTiK AG - www.sofistik.de

Composite bridge 38+50+38, b=14.25m, 2x2HL1100R HISTAR460 , slab 0.30m C30/37

Input data

	S[-]	TYP	IDS	NPT	GRP	NOS	ALF[°]	ALFZ[°]	INCR[o/o]	I
12:	75.5000	S	0	2013						
13:	80.5000	S	0	22013						
14:	87.1000	S	0	2014						
15:	88.0000	S	0	3010						
16:	88.9000	S	0	3011						
17:	95.5000	S	0	23012						
18:	100.5000	S	0	3012						
19:	116.5000	S	0	3013						
20:	120.3000	S	0	23013						
21:	125.1000	S	0	3014						
22:	126.0000	S	0	4010						
23:	0.0000	S	+		61	153				
24:	0.9000	S	+		151	153				
25:	5.7000	S	+		51	151				
26:	9.5000	S	+		51	151				
27:	25.5000	S	+		51	151				
28:	30.5000	S	+		151	151				
29:	37.1000	S	+		62	153				
30:	38.0000	S	+		62	153				
31:	38.9000	S	+		152	253				
32:	45.5000	S	+		52	253				
33:	50.5000	S	+		52	251				
34:	75.5000	S	+		52	251				
35:	80.5000	S	+		152	251				
36:	87.1000	S	+		63	253				
37:	88.0000	S	+		63	253				
38:	88.9000	S	+		153	353				
39:	95.5000	S	+		53	353				
40:	100.5000	S	+		53	351				
41:	116.5000	S	+		53	351				
42:	120.3000	S	+		153	351				
43:	125.1000	S	+		64	351				
44:	126.0000	S	+		64	353				

Extended information

AXIS: 1

	S[-]	TYP	X[m]	Y[m]	Z[m]	dZ/dL	NPT	GRP
1:	0.0000	S	0.0000	0.0000	0.0000	0.0000	1010	
2:	0.9000	S	0.9000	0.0000	0.0000	0.0000	1011	
3:	5.7000	S	5.7000	0.0000	0.0000	0.0000	21012	
4:	9.5000	S	9.5000	0.0000	0.0000	0.0000	1012	
5:	25.5000	S	25.5000	0.0000	0.0000	0.0000	1013	
6:	30.5000	S	30.5000	0.0000	0.0000	0.0000	21013	
7:	37.1000	S	37.1000	0.0000	0.0000	0.0000	1014	
8:	38.0000	S	38.0000	0.0000	0.0000	0.0000	2010	
9:	38.9000	S	38.9000	0.0000	0.0000	0.0000	2011	
10:	45.5000	S	45.5000	0.0000	0.0000	0.0000	22012	
11:	50.5000	S	50.5000	0.0000	0.0000	0.0000	2012	
12:	75.5000	S	75.5000	0.0000	0.0000	0.0000	2013	
13:	80.5000	S	80.5000	0.0000	0.0000	0.0000	22013	
14:	87.1000	S	87.1000	0.0000	0.0000	0.0000	2014	
15:	88.0000	S	88.0000	0.0000	0.0000	0.0000	3010	
16:	88.9000	S	88.9000	0.0000	0.0000	0.0000	3011	
17:	95.5000	S	95.5000	0.0000	0.0000	0.0000	23012	
18:	100.5000	S	100.5000	0.0000	0.0000	0.0000	3012	
19:	116.5000	S	116.5000	0.0000	0.0000	0.0000	3013	
20:	120.3000	S	120.3000	0.0000	0.0000	0.0000	23013	
21:	125.1000	S	125.1000	0.0000	0.0000	0.0000	3014	
22:	126.0000	S	126.0000	0.0000	0.0000	0.0000	4010	

AXIS: 1.A

	S[-]	TYP	X[m]	Y[m]	Z[m]	dZ/dL	NPT	GRP
23:	0.0000	S	0.0000	0.0000	0.0000	0.0000		61
24:	0.9000	S	0.9000	0.0000	0.0000	0.0000		151
25:	5.7000	S	5.7000	0.0000	0.0000	0.0000		51

SOFiSTiK AG - www.sofistik.de

Composite bridge 38+50+38, b=14.25m, 2x2HL1100R HISTAR460 , slab 0.30m C30/37

AXIS: 1.A

	S[-]	TYP	X[m]	Y[m]	Z[m]	dZ/dL	NPT	GRP
26:	9.5000	S	9.5000	0.0000	0.0000	0.0000		51
27:	25.5000	S	25.5000	0.0000	0.0000	0.0000		51
28:	30.5000	S	30.5000	0.0000	0.0000	0.0000		151
29:	37.1000	S	37.1000	0.0000	0.0000	0.0000		62
30:	38.0000	S	38.0000	0.0000	0.0000	0.0000		62
31:	38.9000	S	38.9000	0.0000	0.0000	0.0000		152
32:	45.5000	S	45.5000	0.0000	0.0000	0.0000		52
33:	50.5000	S	50.5000	0.0000	0.0000	0.0000		52
34:	75.5000	S	75.5000	0.0000	0.0000	0.0000		52
35:	80.5000	S	80.5000	0.0000	0.0000	0.0000		152
36:	87.1000	S	87.1000	0.0000	0.0000	0.0000		63
37:	88.0000	S	88.0000	0.0000	0.0000	0.0000		63
38:	88.9000	S	88.9000	0.0000	0.0000	0.0000		153
39:	95.5000	S	95.5000	0.0000	0.0000	0.0000		53
40:	100.5000	S	100.5000	0.0000	0.0000	0.0000		53
41:	116.5000	S	116.5000	0.0000	0.0000	0.0000		53
42:	120.3000	S	120.3000	0.0000	0.0000	0.0000		153
43:	125.1000	S	125.1000	0.0000	0.0000	0.0000		64
44:	126.0000	S	126.0000	0.0000	0.0000	0.0000		64

Geometric axis 2

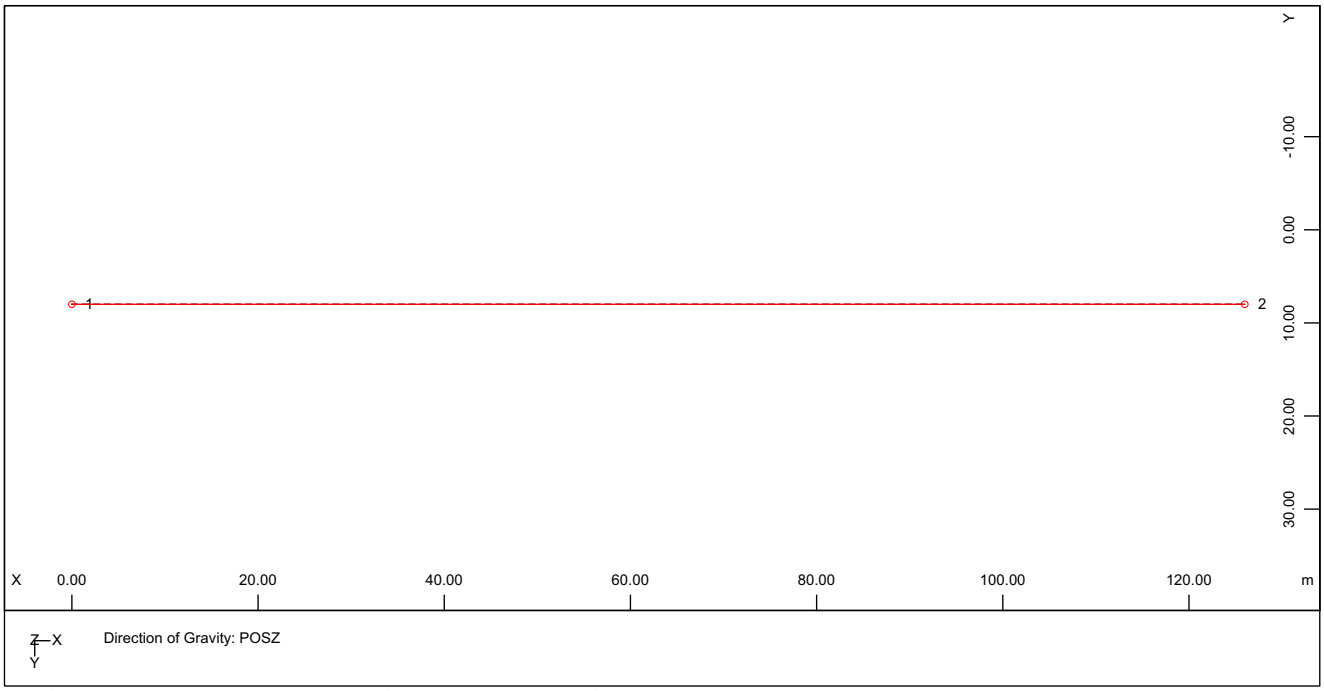

Design elements - Plan view of the axis

Design elements - Plan view of the axis
Tangential intersection points

	Title	S[-]	X[m]	Y[m]	R[m]	La[m]	Le[m]	Tau[°]
IP	1	0.0000	0.0000	8.0000				
IP	2	126.0000	126.0000	8.0000				

Segments

		S[-]	X[m]	Y[m]	L[m]	Ra[m]	Re[m]	A
IP	straight	0.0000	0.0000	8.0000	126.0000			
IP		126.0000	126.0000	8.0000				

SOFiSTiK AG - www.sofistik.de

Composite bridge 38+50+38, b=14.25m, 2x2HL1100R HISTAR460 , slab 0.30m C30/37

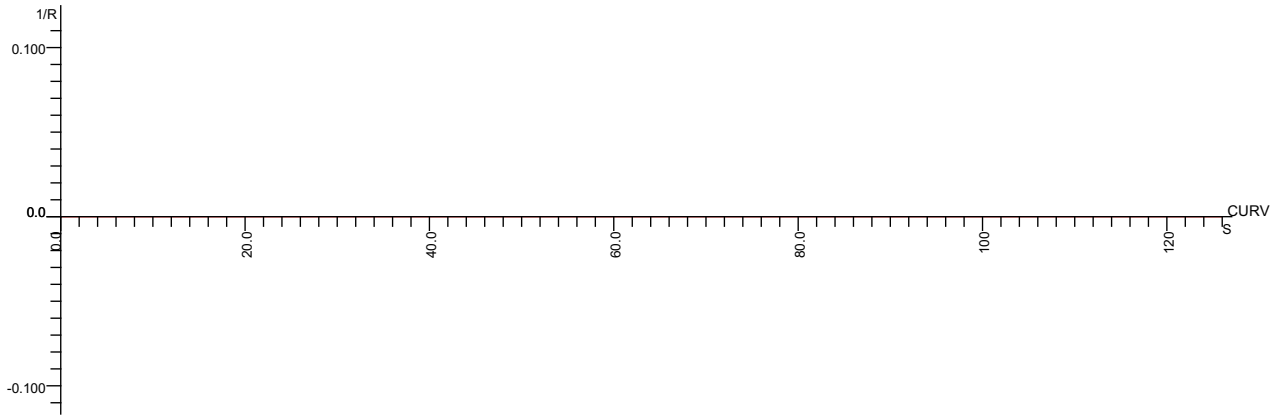

Curvature

Variables

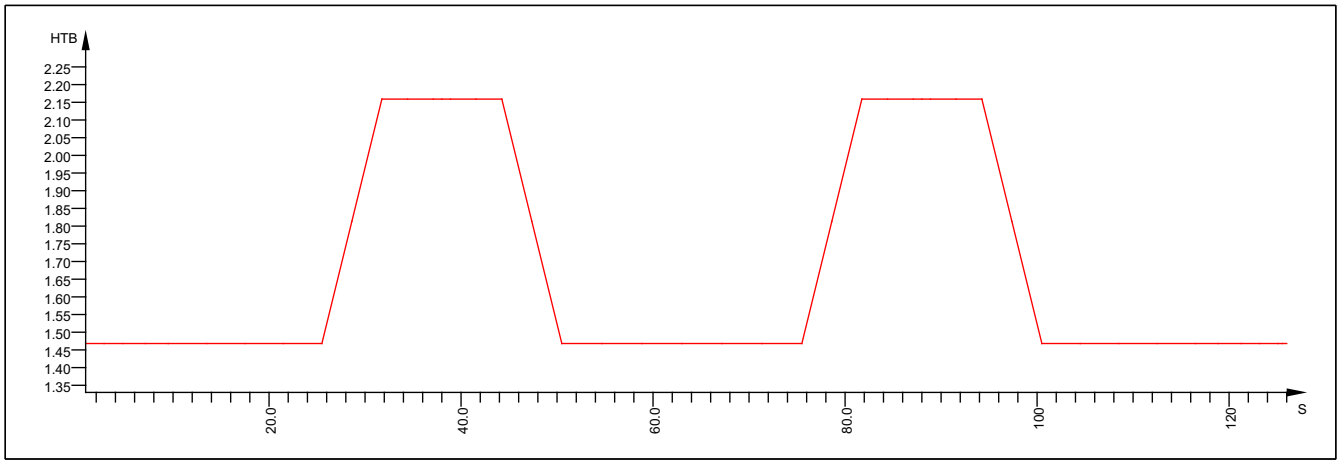

HTB

S[-]	V[-]	DV[-]	TYP
0.900	1.468	0.000	POLY
4.750	1.468	0.000	POLY
9.500	1.468	0.000	POLY
25.500	1.468	0.111	POLY
31.750	2.159	0.000	POLY
37.100	2.159	0.000	POLY
38.900	2.159	0.000	POLY
44.250	2.159	-0.111	POLY
50.500	1.468	0.000	POLY
75.500	1.468	0.111	POLY
81.750	2.159	0.000	POLY
87.100	2.159	0.000	POLY
88.900	2.159	0.000	POLY
94.250	2.159	-0.111	POLY
100.500	1.468	0.000	POLY
116.500	1.468	0.000	POLY
121.250	1.468	0.000	POLY
125.100	1.468	0.000	POLY

Extended information

S[-]	V[-]	DV[-]
0.900	1.468	0.000
2.825	1.468	0.000
4.750	1.468	0.000
7.125	1.468	0.000
9.500	1.468	0.000
13.500	1.468	0.000
17.500	1.468	0.000

SOFiSTiK AG - www.sofistik.de

Composite bridge 38+50+38, b=14.25m, 2x2HL1100R HISTAR460 , slab 0.30m C30/37

Variables

21.500	1.468	0.000
25.500	1.468	0.111
28.625	1.813	0.111
31.750	2.159	0.000
34.425	2.159	0.000
37.100	2.159	0.000
38.000	2.159	0.000
38.900	2.159	0.000
41.575	2.159	0.000
44.250	2.159	-0.111
47.375	1.814	-0.111
50.500	1.468	0.000
54.667	1.468	0.000
58.833	1.468	0.000
63.000	1.468	0.000
67.167	1.468	0.000
71.333	1.468	0.000
75.500	1.468	0.111
78.625	1.813	0.111
81.750	2.159	0.000
84.425	2.159	0.000
87.100	2.159	0.000
88.000	2.159	0.000
88.900	2.159	0.000
91.575	2.159	0.000
94.250	2.159	-0.111
97.375	1.814	-0.111
100.500	1.468	0.000
104.500	1.468	0.000
108.500	1.468	0.000
112.500	1.468	0.000
116.500	1.468	0.000
118.875	1.468	0.000
121.250	1.468	0.000
123.175	1.468	0.000
125.100	1.468	0.000
125.550	1.468	0.000
126.000	1.468	0.000

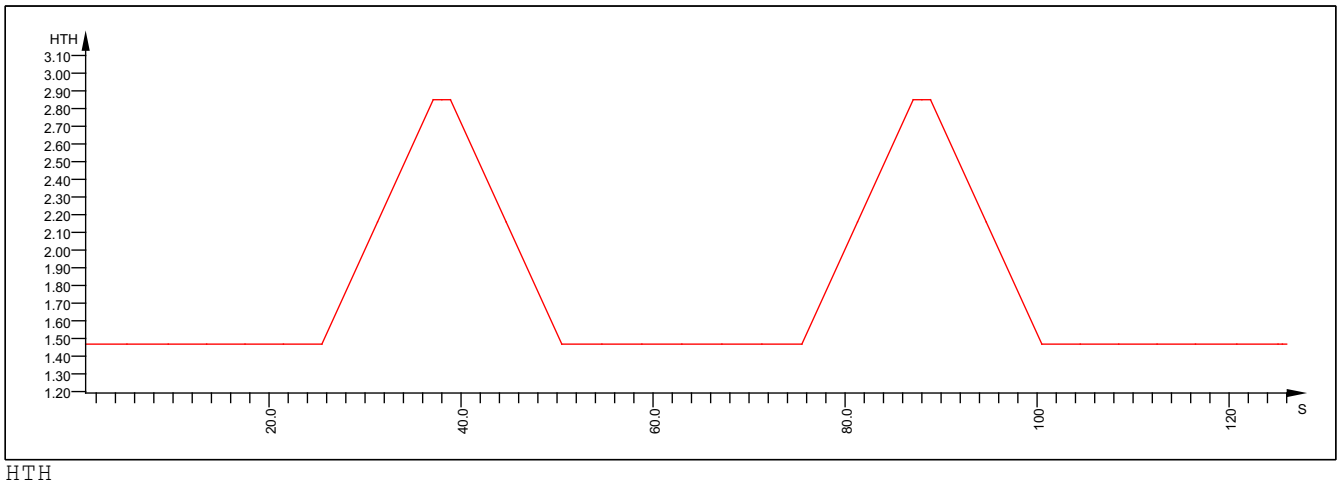

HTH

S[-]	V[-]	DV[-]	TYP
0.900	1.468	0.000	POLY
9.500	1.468	0.000	POLY
25.500	1.468	0.119	POLY
37.100	2.850	0.000	POLY
38.900	2.850	-0.119	POLY
50.500	1.468	0.000	POLY
75.500	1.468	0.119	POLY
87.100	2.850	0.000	POLY

SOFiSTiK AG - www.sofistik.de

Composite bridge 38+50+38, b=14.25m, 2x2HL1100R HISTAR460 , slab 0.30m C30/37

Variables

88.900	2.850	-0.119	POLY
100.500	1.468	0.000	POLY
116.500	1.468	0.000	POLY
125.100	1.468	0.000	POLY

Extended information

S[-]	V[-]	DV[-]
0.900	1.468	0.000
5.200	1.468	0.000
9.500	1.468	0.000
13.500	1.468	0.000
17.500	1.468	0.000
21.500	1.468	0.000
25.500	1.468	0.119
31.300	2.159	0.119
37.100	2.850	0.000
38.000	2.850	0.000
38.900	2.850	-0.119
44.700	2.159	-0.119
50.500	1.468	0.000
54.667	1.468	0.000
58.833	1.468	0.000
63.000	1.468	0.000
67.167	1.468	0.000
71.333	1.468	0.000
75.500	1.468	0.119
81.300	2.159	0.119
87.100	2.850	0.000
88.000	2.850	0.000
88.900	2.850	-0.119
94.700	2.159	-0.119
100.500	1.468	0.000
104.500	1.468	0.000
108.500	1.468	0.000
112.500	1.468	0.000
116.500	1.468	0.000
120.800	1.468	0.000
125.100	1.468	0.000
125.550	1.468	0.000
126.000	1.468	0.000

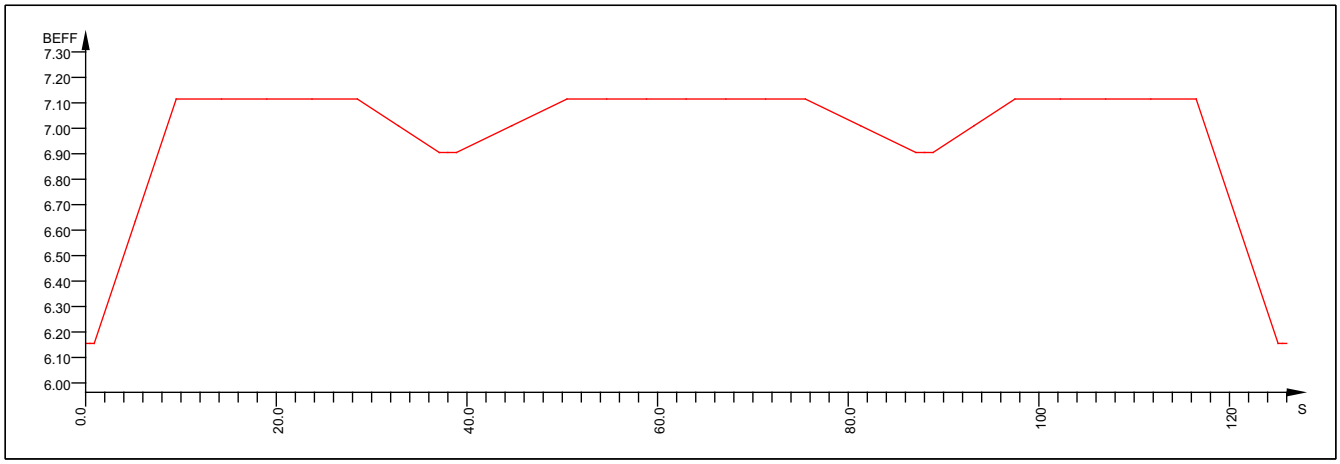

BEFF

S[-]	V[-]	DV[-]	TYP
0.000	6.155	0.000	POLY
0.900	6.155	0.112	POLY
9.500	7.115	0.000	POLY
28.500	7.115	-0.024	POLY
37.100	6.905	0.000	POLY
38.900	6.905	0.018	POLY

SOFiSTiK AG - www.sofistik.de

Composite bridge 38+50+38, b=14.25m, 2x2HL1100R HISTAR460 , slab 0.30m C30/37

Variables

50.500	7.115	0.000	POLY
75.500	7.115	-0.018	POLY
87.100	6.905	0.000	POLY
88.900	6.905	0.024	POLY
97.500	7.115	0.000	POLY
116.500	7.115	-0.112	POLY
125.100	6.155	0.000	POLY

Extended information

S[-]	V[-]	DV[-]
0.000	6.155	0.000
0.450	6.155	0.000
0.900	6.155	0.112
5.200	6.635	0.112
9.500	7.115	0.000
14.250	7.115	0.000
19.000	7.115	0.000
23.750	7.115	0.000
28.500	7.115	-0.024
32.800	7.010	-0.024
37.100	6.905	0.000
38.000	6.905	0.000
38.900	6.905	0.018
44.700	7.010	0.018
50.500	7.115	0.000
54.667	7.115	0.000
58.833	7.115	0.000
63.000	7.115	0.000
67.167	7.115	0.000
71.333	7.115	0.000
75.500	7.115	-0.018
81.300	7.010	-0.018
87.100	6.905	0.000
88.000	6.905	0.000
88.900	6.905	0.024
93.200	7.010	0.024
97.500	7.115	0.000
102.250	7.115	0.000
107.000	7.115	0.000
111.750	7.115	0.000
116.500	7.115	-0.112
120.800	6.635	-0.112
125.100	6.155	0.000
125.550	6.155	0.000
126.000	6.155	0.000

SOFiSTiK AG - www.sofistik.de

Composite bridge 38+50+38, b=14.25m, 2x2HL1100R HISTAR460 , slab 0.30m C30/37

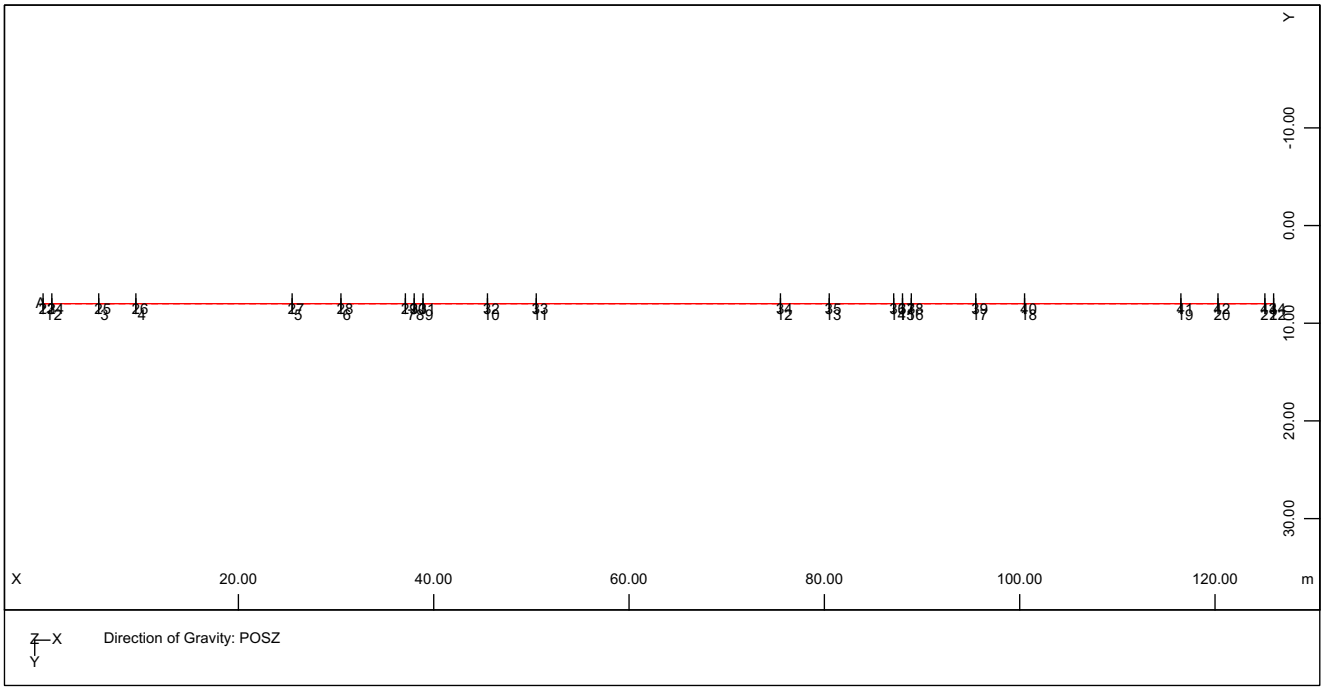

Placements

Placements
Input data

	S[-]	TYP	IDS	NPT	GRP	NOS	ALF[°]	ALFZ[°]	INCR[o/o]	I
1:	0.0000	S	0	1010						
2:	0.9000	S	0	1011						
3:	5.7000	S	0	21012						
4:	9.5000	S	0	1012						
5:	25.5000	S	0	1013						
6:	30.5000	S	0	21013						
7:	37.1000	S	0	1014						
8:	38.0000	S	0	2010						
9:	38.9000	S	0	2011						
10:	45.5000	S	0	22012						
11:	50.5000	S	0	2012						
12:	75.5000	S	0	2013						
13:	80.5000	S	0	22013						
14:	87.1000	S	0	2014						
15:	88.0000	S	0	3010						
16:	88.9000	S	0	3011						
17:	95.5000	S	0	23012						
18:	100.5000	S	0	3012						
19:	116.5000	S	0	3013						
20:	120.3000	S	0	23013						
21:	125.1000	S	0	3014						
22:	126.0000	S	0	4010						
23:	0.0000	S	+		61	153				
24:	0.9000	S	+		151	153				
25:	5.7000	S	+		51	151				
26:	9.5000	S	+		51	151				
27:	25.5000	S	+		51	151				
28:	30.5000	S	+		151	151				
29:	37.1000	S	+		62	153				
30:	38.0000	S	+		62	153				
31:	38.9000	S	+		152	253				
32:	45.5000	S	+		52	253				
33:	50.5000	S	+		52	251				
34:	75.5000	S	+		52	251				
35:	80.5000	S	+		152	251				
36:	87.1000	S	+		63	253				
37:	88.0000	S	+		63	253				
38:	88.9000	S	+		153	353				

SOFiSTiK AG - www.sofistik.de

Composite bridge 38+50+38, b=14.25m, 2x2HL1100R HISTAR460 , slab 0.30m C30/37

Input data

	S[-]	TYP	IDS	NPT	GRP	NOS	ALF[°]	ALFZ[°]	INCR[o/o]	I
39:	95.5000	S	+		53	353				
40:	100.5000	S	+		53	351				
41:	116.5000	S	+		53	351				
42:	120.3000	S	+		153	351				
43:	125.1000	S	+		64	351				
44:	126.0000	S	+		64	353				

Extended information

AXIS: 2

	S[-]	TYP	X[m]	Y[m]	Z[m]	dZ/dL	NPT	GRP
1:	0.0000	S	0.0000	8.0000	0.0000	0.0000	1010	
2:	0.9000	S	0.9000	8.0000	0.0000	0.0000	1011	
3:	5.7000	S	5.7000	8.0000	0.0000	0.0000	21012	
4:	9.5000	S	9.5000	8.0000	0.0000	0.0000	1012	
5:	25.5000	S	25.5000	8.0000	0.0000	0.0000	1013	
6:	30.5000	S	30.5000	8.0000	0.0000	0.0000	21013	
7:	37.1000	S	37.1000	8.0000	0.0000	0.0000	1014	
8:	38.0000	S	38.0000	8.0000	0.0000	0.0000	2010	
9:	38.9000	S	38.9000	8.0000	0.0000	0.0000	2011	
10:	45.5000	S	45.5000	8.0000	0.0000	0.0000	22012	
11:	50.5000	S	50.5000	8.0000	0.0000	0.0000	2012	
12:	75.5000	S	75.5000	8.0000	0.0000	0.0000	2013	
13:	80.5000	S	80.5000	8.0000	0.0000	0.0000	22013	
14:	87.1000	S	87.1000	8.0000	0.0000	0.0000	2014	
15:	88.0000	S	88.0000	8.0000	0.0000	0.0000	3010	
16:	88.9000	S	88.9000	8.0000	0.0000	0.0000	3011	
17:	95.5000	S	95.5000	8.0000	0.0000	0.0000	23012	
18:	100.5000	S	100.5000	8.0000	0.0000	0.0000	3012	
19:	116.5000	S	116.5000	8.0000	0.0000	0.0000	3013	
20:	120.3000	S	120.3000	8.0000	0.0000	0.0000	23013	
21:	125.1000	S	125.1000	8.0000	0.0000	0.0000	3014	
22:	126.0000	S	126.0000	8.0000	0.0000	0.0000	4010	

AXIS: 2.A

	S[-]	TYP	X[m]	Y[m]	Z[m]	dZ/dL	NPT	GRP
23:	0.0000	S	0.0000	8.0000	0.0000	0.0000		61
24:	0.9000	S	0.9000	8.0000	0.0000	0.0000		151
25:	5.7000	S	5.7000	8.0000	0.0000	0.0000		51
26:	9.5000	S	9.5000	8.0000	0.0000	0.0000		51
27:	25.5000	S	25.5000	8.0000	0.0000	0.0000		51
28:	30.5000	S	30.5000	8.0000	0.0000	0.0000		151
29:	37.1000	S	37.1000	8.0000	0.0000	0.0000		62
30:	38.0000	S	38.0000	8.0000	0.0000	0.0000		62
31:	38.9000	S	38.9000	8.0000	0.0000	0.0000		152
32:	45.5000	S	45.5000	8.0000	0.0000	0.0000		52
33:	50.5000	S	50.5000	8.0000	0.0000	0.0000		52
34:	75.5000	S	75.5000	8.0000	0.0000	0.0000		52
35:	80.5000	S	80.5000	8.0000	0.0000	0.0000		152
36:	87.1000	S	87.1000	8.0000	0.0000	0.0000		63
37:	88.0000	S	88.0000	8.0000	0.0000	0.0000		63
38:	88.9000	S	88.9000	8.0000	0.0000	0.0000		153
39:	95.5000	S	95.5000	8.0000	0.0000	0.0000		53
40:	100.5000	S	100.5000	8.0000	0.0000	0.0000		53
41:	116.5000	S	116.5000	8.0000	0.0000	0.0000		53
42:	120.3000	S	120.3000	8.0000	0.0000	0.0000		153
43:	125.1000	S	125.1000	8.0000	0.0000	0.0000		64
44:	126.0000	S	126.0000	8.0000	0.0000	0.0000		64

Geometric axis 8

SOFiSTiK AG - www.sofistik.de

Composite bridge 38+50+38, b=14.25m, 2x2HL1100R HISTAR460 , slab 0.30m C30/37

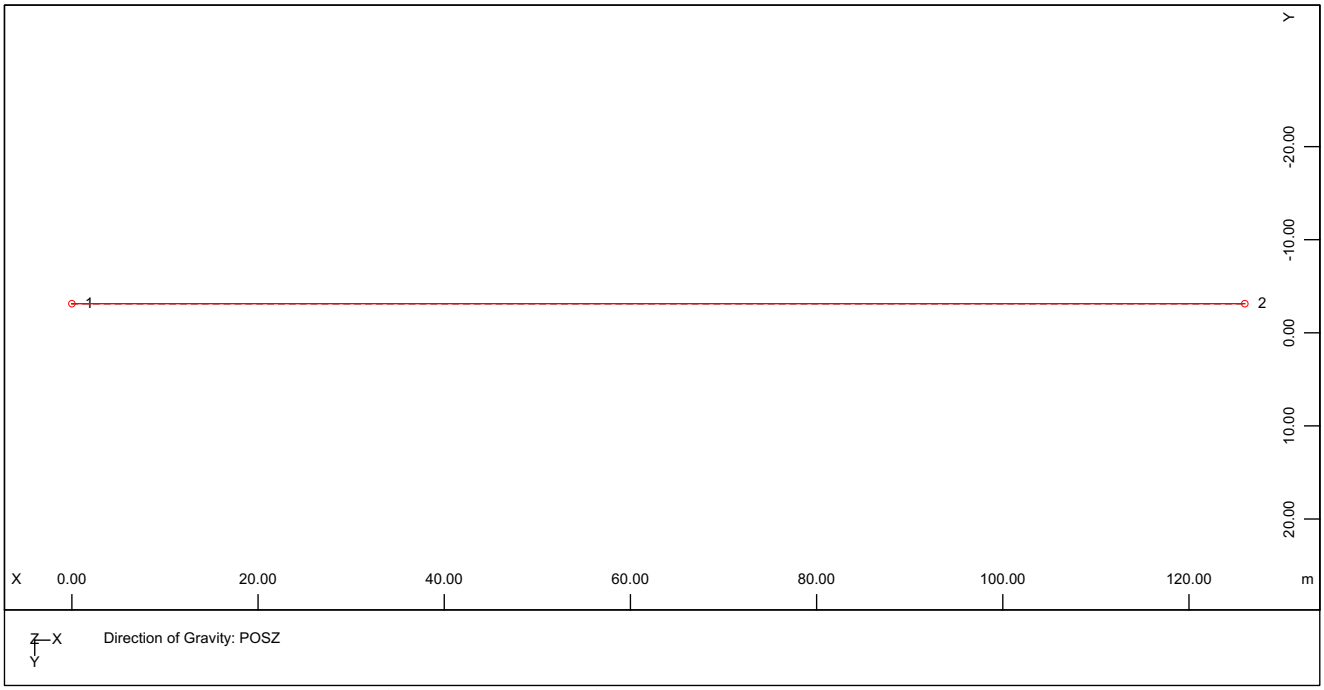

Design elements - Plan view of the axis

Design elements - Plan view of the axis
Tangential intersection points

	Title	S[-]	X[m]	Y[m]	R[m]	La[m]	Le[m]	Tau[°]
IP	1	0.0000	0.0000	-3.1250				
IP	2	126.0000	126.0000	-3.1250				

Segments

		S[-]	X[m]	Y[m]	L[m]	Ra[m]	Re[m]	A
IP	straight	0.0000	0.0000	-3.1250	126.0000			
IP		126.0000	126.0000	-3.1250				

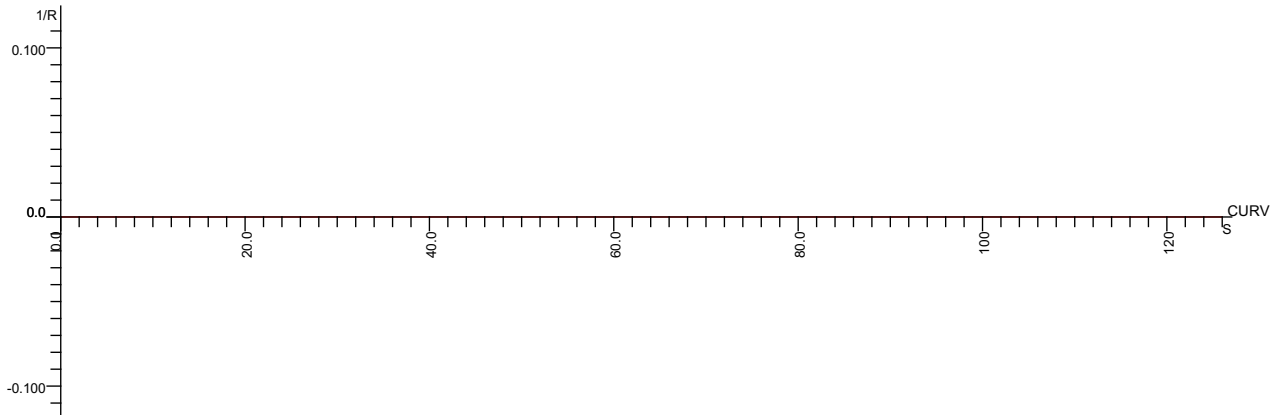

Curvature

SOFiSTiK AG - www.sofistik.de

Composite bridge 38+50+38, b=14.25m, 2x2HL1100R HISTAR460 , slab 0.30m C30/37

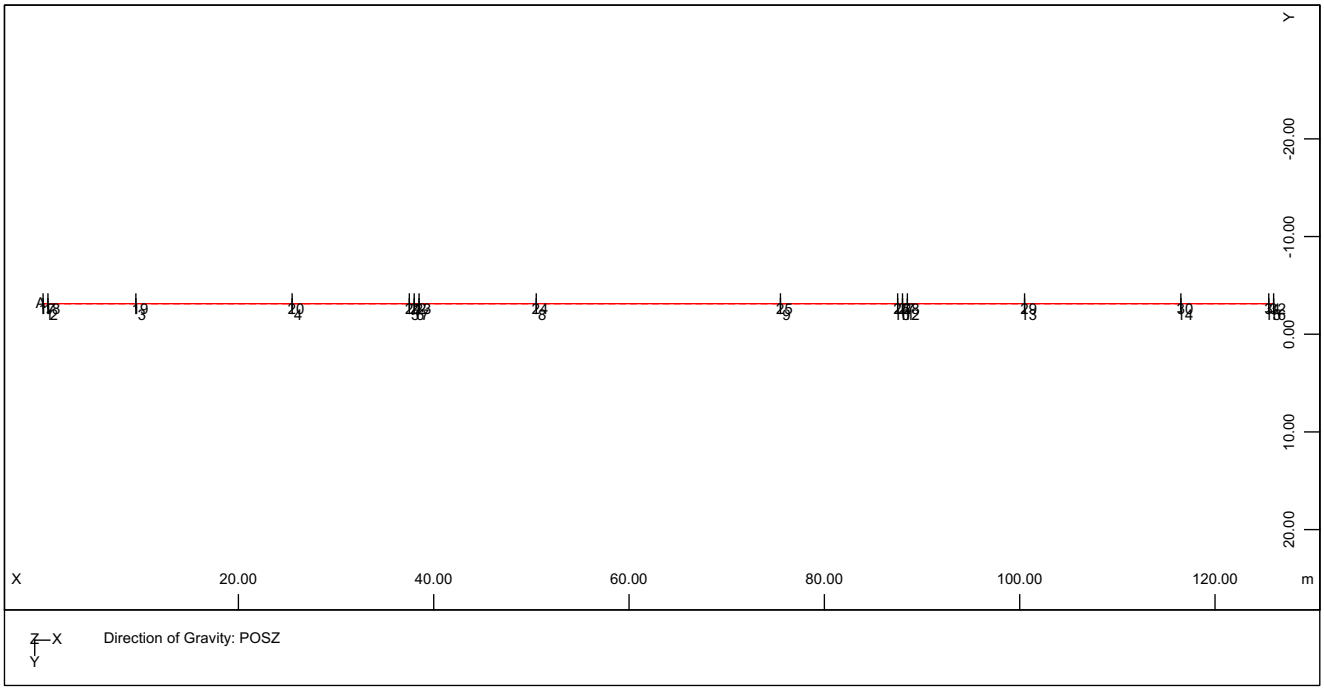

Placements

Placements
Input data

	S[-]	TYP	IDS	NPT	GRP	NOS	ALF[°]	ALFZ[°]	INCR[o/o]	I
1:	0.0000	S	0	1010						
2:	0.5000	S	0	1011						
3:	9.5000	S	0	1012						
4:	25.5000	S	0	1013						
5:	37.5000	S	0	1014						
6:	38.0000	S	0	2010						
7:	38.5000	S	0	2011						
8:	50.5000	S	0	2012						
9:	75.5000	S	0	2013						
10:	87.5000	S	0	2014						
11:	88.0000	S	0	3010						
12:	88.5000	S	0	3011						
13:	100.5000	S	0	3012						
14:	116.5000	S	0	3013						
15:	125.5000	S	0	3014						
16:	126.0000	S	0	4010						
17:	0.0000	S	+		50	10				
18:	0.5000	S	+		50	10				
19:	9.5000	S	+		50	10				
20:	25.5000	S	+		50	10				
21:	37.5000	S	+		50	10				
22:	38.0000	S	+		50	10				
23:	38.5000	S	+		50	10				
24:	50.5000	S	+		50	10				
25:	75.5000	S	+		50	10				
26:	87.5000	S	+		50	10				
27:	88.0000	S	+		50	10				
28:	88.5000	S	+		50	10				
29:	100.5000	S	+		50	10				
30:	116.5000	S	+		50	10				
31:	125.5000	S	+		50	10				
32:	126.0000	S	+		50	10				

Extended information

SOFiSTiK AG - www.sofistik.de

Composite bridge 38+50+38, b=14.25m, 2x2HL1100R HISTAR460 , slab 0.30m C30/37

AXIS: 8

	S[-]	TYP	X[m]	Y[m]	Z[m]	dZ/dL	NPT	GRP
1:	0.0000	S	0.0000	-3.1250	0.0000	0.0000	1010	
2:	0.5000	S	0.5000	-3.1250	0.0000	0.0000	1011	
3:	9.5000	S	9.5000	-3.1250	0.0000	0.0000	1012	
4:	25.5000	S	25.5000	-3.1250	0.0000	0.0000	1013	
5:	37.5000	S	37.5000	-3.1250	0.0000	0.0000	1014	
6:	38.0000	S	38.0000	-3.1250	0.0000	0.0000	2010	
7:	38.5000	S	38.5000	-3.1250	0.0000	0.0000	2011	
8:	50.5000	S	50.5000	-3.1250	0.0000	0.0000	2012	
9:	75.5000	S	75.5000	-3.1250	0.0000	0.0000	2013	
10:	87.5000	S	87.5000	-3.1250	0.0000	0.0000	2014	
11:	88.0000	S	88.0000	-3.1250	0.0000	0.0000	3010	
12:	88.5000	S	88.5000	-3.1250	0.0000	0.0000	3011	
13:	100.5000	S	100.5000	-3.1250	0.0000	0.0000	3012	
14:	116.5000	S	116.5000	-3.1250	0.0000	0.0000	3013	
15:	125.5000	S	125.5000	-3.1250	0.0000	0.0000	3014	
16:	126.0000	S	126.0000	-3.1250	0.0000	0.0000	4010	

AXIS: 8.A

	S[-]	TYP	X[m]	Y[m]	Z[m]	dZ/dL	NPT	GRP
17:	0.0000	S	0.0000	-3.1250	0.0000	0.0000		50
18:	0.5000	S	0.5000	-3.1250	0.0000	0.0000		50
19:	9.5000	S	9.5000	-3.1250	0.0000	0.0000		50
20:	25.5000	S	25.5000	-3.1250	0.0000	0.0000		50
21:	37.5000	S	37.5000	-3.1250	0.0000	0.0000		50
22:	38.0000	S	38.0000	-3.1250	0.0000	0.0000		50
23:	38.5000	S	38.5000	-3.1250	0.0000	0.0000		50
24:	50.5000	S	50.5000	-3.1250	0.0000	0.0000		50
25:	75.5000	S	75.5000	-3.1250	0.0000	0.0000		50
26:	87.5000	S	87.5000	-3.1250	0.0000	0.0000		50
27:	88.0000	S	88.0000	-3.1250	0.0000	0.0000		50
28:	88.5000	S	88.5000	-3.1250	0.0000	0.0000		50
29:	100.5000	S	100.5000	-3.1250	0.0000	0.0000		50
30:	116.5000	S	116.5000	-3.1250	0.0000	0.0000		50
31:	125.5000	S	125.5000	-3.1250	0.0000	0.0000		50
32:	126.0000	S	126.0000	-3.1250	0.0000	0.0000		50

Geometric axis 9

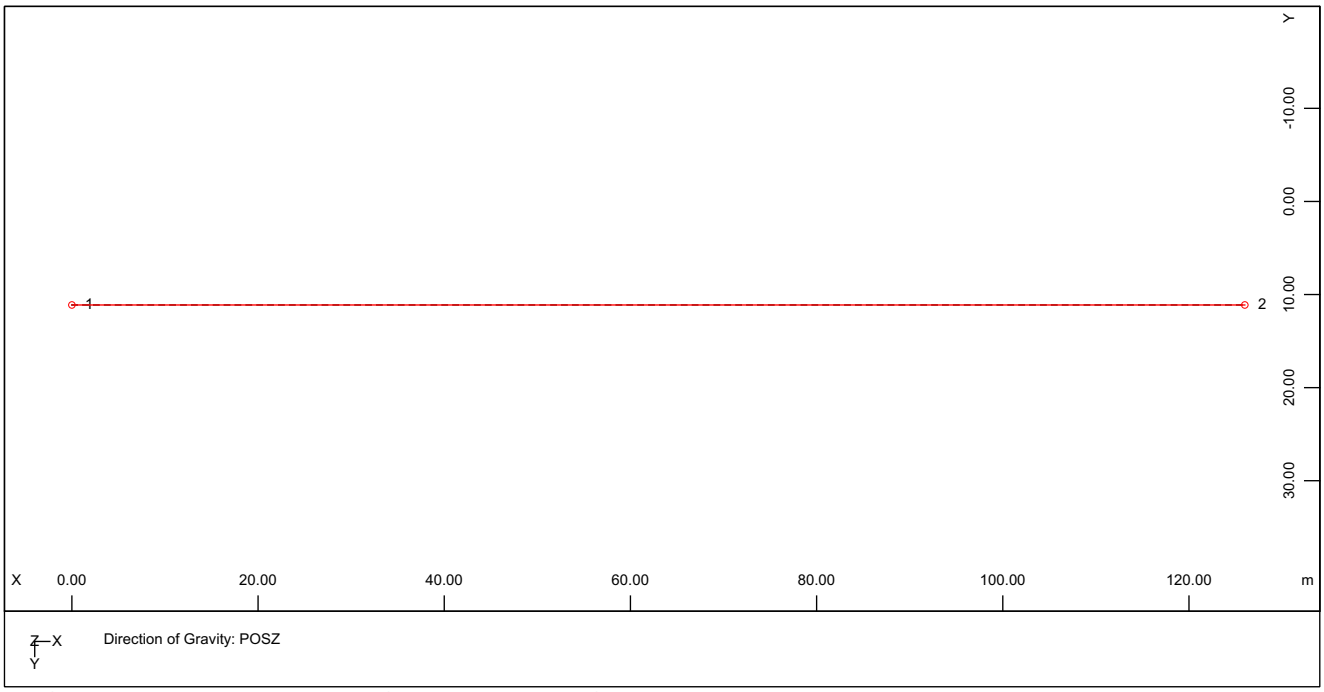

Design elements - Plan view of the axis

SOFiSTiK AG - www.sofistik.de

Composite bridge 38+50+38, b=14.25m, 2x2HL1100R HISTAR460 , slab 0.30m C30/37

Design elements - Plan view of the axis
Tangential intersection points

	Title	S[-]	X[m]	Y[m]	R[m]	La[m]	Le[m]	Tau[°]
IP	1	0.0000	0.0000	11.1250				
IP	2	126.0000	126.0000	11.1250				

Segments

		S[-]	X[m]	Y[m]	L[m]	Ra[m]	Re[m]	A
IP	straight	0.0000	0.0000	11.1250	126.0000			
IP		126.0000	126.0000	11.1250				

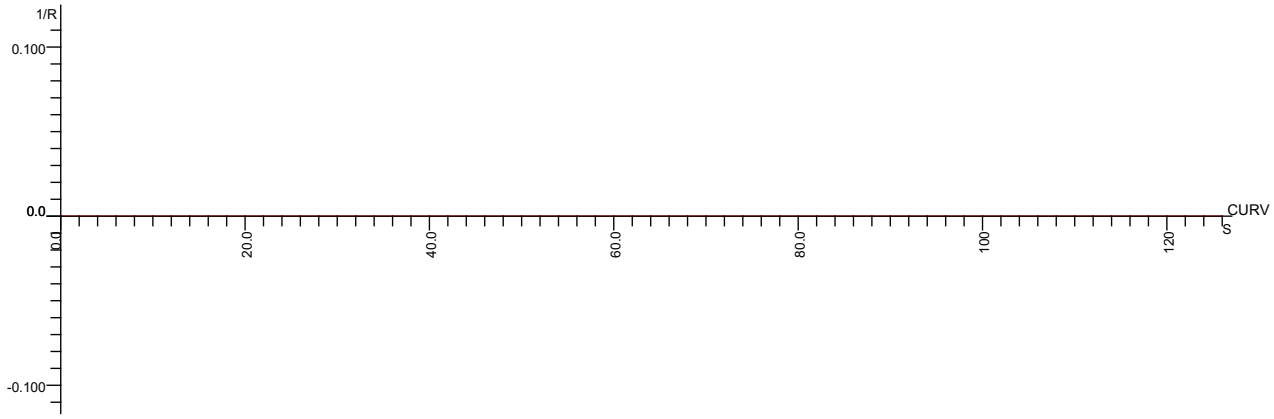

Curvature

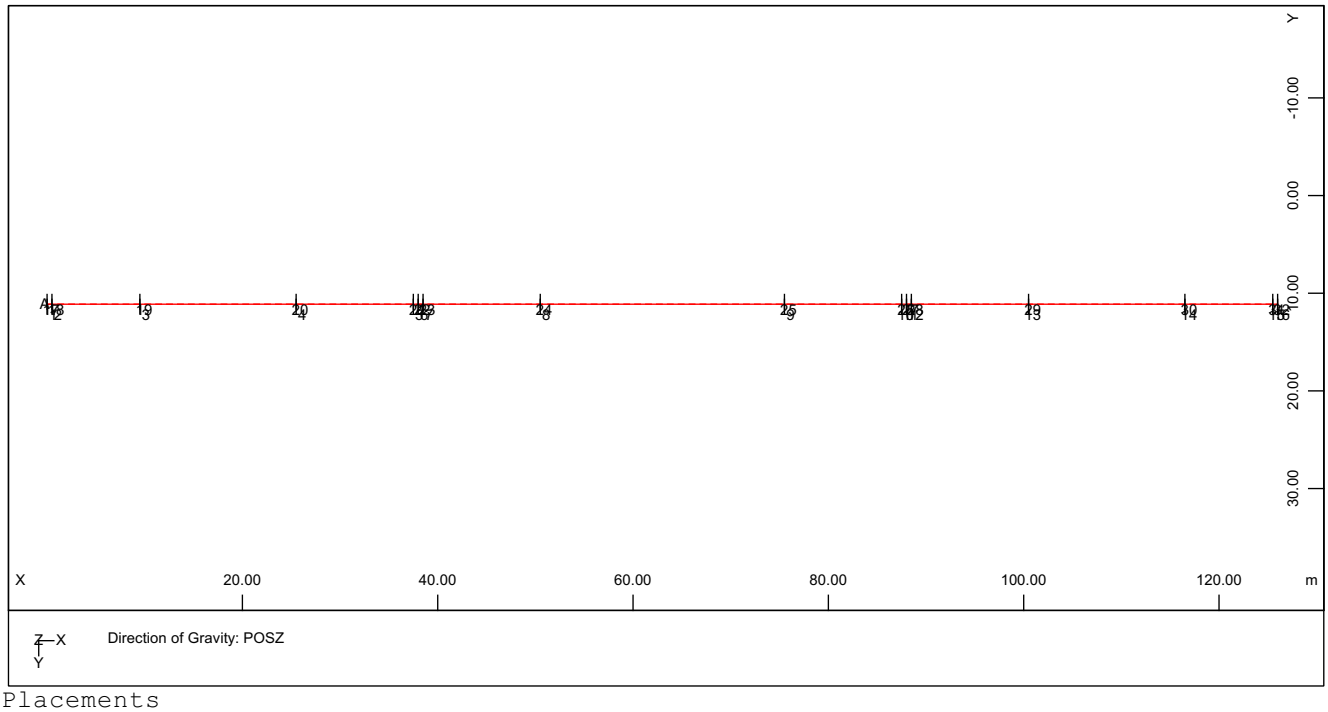

Placements

Placements
Input data

	S[-]	TYP	IDS	NPT	GRP	NOS	ALF[°]	ALFZ[°]	INCR[o/o]	I
1:	0.0000	S	0	1010						
2:	0.5000	S	0	1011						
3:	9.5000	S	0	1012						
4:	25.5000	S	0	1013						
5:	37.5000	S	0	1014						
6:	38.0000	S	0	2010						
7:	38.5000	S	0	2011						
8:	50.5000	S	0	2012						
9:	75.5000	S	0	2013						
10:	87.5000	S	0	2014						

SOFiSTiK AG - www.sofistik.de

Composite bridge 38+50+38, b=14.25m, 2x2HL1100R HISTAR460 , slab 0.30m C30/37

Input data

	S[-]	TYP	IDS	NPT	GRP	NOS	ALF[°]	ALFZ[°]	INCR[o/o]	I
11:	88.0000	S	0	3010						
12:	88.5000	S	0	3011						
13:	100.5000	S	0	3012						
14:	116.5000	S	0	3013						
15:	125.5000	S	0	3014						
16:	126.0000	S	0	4010						
17:	0.0000	S	+		50	10				
18:	0.5000	S	+		50	10				
19:	9.5000	S	+		50	10				
20:	25.5000	S	+		50	10				
21:	37.5000	S	+		50	10				
22:	38.0000	S	+		50	10				
23:	38.5000	S	+		50	10				
24:	50.5000	S	+		50	10				
25:	75.5000	S	+		50	10				
26:	87.5000	S	+		50	10				
27:	88.0000	S	+		50	10				
28:	88.5000	S	+		50	10				
29:	100.5000	S	+		50	10				
30:	116.5000	S	+		50	10				
31:	125.5000	S	+		50	10				
32:	126.0000	S	+		50	10				

Extended information

AXIS: 9

	S[-]	TYP	X[m]	Y[m]	Z[m]	dZ/dL	NPT	GRP
1:	0.0000	S	0.0000	11.1250	0.0000	0.0000	1010	
2:	0.5000	S	0.5000	11.1250	0.0000	0.0000	1011	
3:	9.5000	S	9.5000	11.1250	0.0000	0.0000	1012	
4:	25.5000	S	25.5000	11.1250	0.0000	0.0000	1013	
5:	37.5000	S	37.5000	11.1250	0.0000	0.0000	1014	
6:	38.0000	S	38.0000	11.1250	0.0000	0.0000	2010	
7:	38.5000	S	38.5000	11.1250	0.0000	0.0000	2011	
8:	50.5000	S	50.5000	11.1250	0.0000	0.0000	2012	
9:	75.5000	S	75.5000	11.1250	0.0000	0.0000	2013	
10:	87.5000	S	87.5000	11.1250	0.0000	0.0000	2014	
11:	88.0000	S	88.0000	11.1250	0.0000	0.0000	3010	
12:	88.5000	S	88.5000	11.1250	0.0000	0.0000	3011	
13:	100.5000	S	100.5000	11.1250	0.0000	0.0000	3012	
14:	116.5000	S	116.5000	11.1250	0.0000	0.0000	3013	
15:	125.5000	S	125.5000	11.1250	0.0000	0.0000	3014	
16:	126.0000	S	126.0000	11.1250	0.0000	0.0000	4010	

AXIS: 9.A

	S[-]	TYP	X[m]	Y[m]	Z[m]	dZ/dL	NPT	GRP
17:	0.0000	S	0.0000	11.1250	0.0000	0.0000		50
18:	0.5000	S	0.5000	11.1250	0.0000	0.0000		50
19:	9.5000	S	9.5000	11.1250	0.0000	0.0000		50
20:	25.5000	S	25.5000	11.1250	0.0000	0.0000		50
21:	37.5000	S	37.5000	11.1250	0.0000	0.0000		50
22:	38.0000	S	38.0000	11.1250	0.0000	0.0000		50
23:	38.5000	S	38.5000	11.1250	0.0000	0.0000		50
24:	50.5000	S	50.5000	11.1250	0.0000	0.0000		50
25:	75.5000	S	75.5000	11.1250	0.0000	0.0000		50
26:	87.5000	S	87.5000	11.1250	0.0000	0.0000		50
27:	88.0000	S	88.0000	11.1250	0.0000	0.0000		50
28:	88.5000	S	88.5000	11.1250	0.0000	0.0000		50
29:	100.5000	S	100.5000	11.1250	0.0000	0.0000		50
30:	116.5000	S	116.5000	11.1250	0.0000	0.0000		50
31:	125.5000	S	125.5000	11.1250	0.0000	0.0000		50
32:	126.0000	S	126.0000	11.1250	0.0000	0.0000		50

Structural Elements

SOFiSTiK AG - www.sofistik.de

Composite bridge 38+50+38, b=14.25m, 2x2HL1100R HISTAR460 , slab 0.30m C30/37

Structural Points

Number	x[m]	y[m]	z[m]	t[m]	h[m]	Title / Support Conditions			
1010	0.000	11.125	0.000	0.000	0.000				
	dx[m]	dy[m]	A[m2]	t[m]		NA	Local directions		
1010	0.000	0.000	0.000	0.000	Pointno.		(x) 1.000	0.000	0.000
	0.000	0.000	0.000	0.000	Support		(y) 0.000	1.000	0.000
	0.000	0.000	0.000	0.000	Haunch		(z) 0.000	0.000	1.000
Number	x[m]	y[m]	z[m]	t[m]	h[m]	Title / Support Conditions			
1011	0.500	11.125	0.000	0.000	0.000				
	dx[m]	dy[m]	A[m2]	t[m]		NA	Local directions		
1011	0.000	0.000	0.000	0.000	Pointno.		(x) 1.000	0.000	0.000
	0.000	0.000	0.000	0.000	Support		(y) 0.000	1.000	0.000
	0.000	0.000	0.000	0.000	Haunch		(z) 0.000	0.000	1.000
Number	x[m]	y[m]	z[m]	t[m]	h[m]	Title / Support Conditions			
1012	9.500	11.125	0.000	0.000	0.000				
	dx[m]	dy[m]	A[m2]	t[m]		NA	Local directions		
1012	0.000	0.000	0.000	0.000	Pointno.		(x) 1.000	0.000	0.000
	0.000	0.000	0.000	0.000	Support		(y) 0.000	1.000	0.000
	0.000	0.000	0.000	0.000	Haunch		(z) 0.000	0.000	1.000
Number	x[m]	y[m]	z[m]	t[m]	h[m]	Title / Support Conditions			
1013	25.500	11.125	0.000	0.000	0.000				
	dx[m]	dy[m]	A[m2]	t[m]		NA	Local directions		
1013	0.000	0.000	0.000	0.000	Pointno.		(x) 1.000	0.000	0.000
	0.000	0.000	0.000	0.000	Support		(y) 0.000	1.000	0.000
	0.000	0.000	0.000	0.000	Haunch		(z) 0.000	0.000	1.000
Number	x[m]	y[m]	z[m]	t[m]	h[m]	Title / Support Conditions			
1014	37.500	11.125	0.000	0.000	0.000				
	dx[m]	dy[m]	A[m2]	t[m]		NA	Local directions		
1014	0.000	0.000	0.000	0.000	Pointno.		(x) 1.000	0.000	0.000
	0.000	0.000	0.000	0.000	Support		(y) 0.000	1.000	0.000
	0.000	0.000	0.000	0.000	Haunch		(z) 0.000	0.000	1.000
Number	x[m]	y[m]	z[m]	t[m]	h[m]	Title / Support Conditions			
1107	0.000	0.000	12.000	0.000	0.000				
	dx[m]	dy[m]	A[m2]	t[m]		NA	Local directions		
1107	0.000	0.000	0.000	0.000	Pointno.		(x) 1.000	0.000	0.000
	0.000	0.000	0.000	0.000	Support		(y) 0.000	1.000	0.000
	0.000	0.000	0.000	0.000	Haunch		(z) 0.000	0.000	1.000
Number	x[m]	y[m]	z[m]	t[m]	h[m]	Title / Support Conditions			
1108	0.000	0.000	3.550	0.000	0.000				
	dx[m]	dy[m]	A[m2]	t[m]		NA	Local directions		
1108	0.000	0.000	0.000	0.000	Pointno.		(x) 1.000	0.000	0.000
	0.000	0.000	0.000	0.000	Support		(y) 0.000	1.000	0.000
	0.000	0.000	0.000	0.000	Haunch		(z) 0.000	0.000	1.000
Number	x[m]	y[m]	z[m]	t[m]	h[m]	Title / Support Conditions			
1109	0.000	0.000	3.050	0.000	0.000				
	dx[m]	dy[m]	A[m2]	t[m]		NA	Local directions		
1109	0.000	0.000	0.000	0.000	Pointno.		(x) 1.000	0.000	0.000
	0.000	0.000	0.000	0.000	Support		(y) 0.000	1.000	0.000
	0.000	0.000	0.000	0.000	Haunch		(z) 0.000	0.000	1.000
Number	x[m]	y[m]	z[m]	t[m]	h[m]	Title / Support Conditions			
1110	0.000	0.000	0.000	0.000	0.000				
	dx[m]	dy[m]	A[m2]	t[m]		NA	Local directions		
1110	0.000	0.000	0.000	0.000	Pointno.		(x) 1.000	0.000	0.000
	0.000	0.000	0.000	0.000	Support		(y) 0.000	1.000	0.000
	0.000	0.000	0.000	0.000	Haunch		(z) 0.000	0.000	1.000
Number	x[m]	y[m]	z[m]	t[m]	h[m]	Title / Support Conditions			
1111	0.900	0.000	0.000	0.000	0.000				
	dx[m]	dy[m]	A[m2]	t[m]		NA	Local directions		
1111	0.000	0.000	0.000	0.000	Pointno.		(x) 1.000	0.000	0.000
	0.000	0.000	0.000	0.000	Support		(y) 0.000	1.000	0.000
	0.000	0.000	0.000	0.000	Haunch		(z) 0.000	0.000	1.000
Number	x[m]	y[m]	z[m]	t[m]	h[m]	Title / Support Conditions			
1112	9.500	0.000	0.000	0.000	0.000				
	dx[m]	dy[m]	A[m2]	t[m]		NA	Local directions		
1112	0.000	0.000	0.000	0.000	Pointno.		(x) 1.000	0.000	0.000
	0.000	0.000	0.000	0.000	Support		(y) 0.000	1.000	0.000
	0.000	0.000	0.000	0.000	Haunch		(z) 0.000	0.000	1.000

SOFiSTiK AG - www.sofistik.de

Composite bridge 38+50+38, b=14.25m, 2x2HL1100R HISTAR460 , slab 0.30m C30/37

Number	x[m]	y[m]	z[m]	t[m]	h[m]	Title / Support Conditions			
1113	25.500	0.000	0.000	0.000	0.000				
	dx[m]	dy[m]	A[m2]	t[m]		NA	Local directions		
1113	0.000	0.000	0.000	0.000	Pointno.		(x) 1.000	0.000	0.000
	0.000	0.000	0.000	0.000	Support		(y) 0.000	1.000	0.000
	0.000	0.000	0.000	0.000	Haunch		(z) 0.000	0.000	1.000
Number	x[m]	y[m]	z[m]	t[m]	h[m]	Title / Support Conditions			
1114	37.100	0.000	0.000	0.000	0.000				
	dx[m]	dy[m]	A[m2]	t[m]		NA	Local directions		
1114	0.000	0.000	0.000	0.000	Pointno.		(x) 1.000	0.000	0.000
	0.000	0.000	0.000	0.000	Support		(y) 0.000	1.000	0.000
	0.000	0.000	0.000	0.000	Haunch		(z) 0.000	0.000	1.000
Number	x[m]	y[m]	z[m]	t[m]	h[m]	Title / Support Conditions			
1115	0.700	0.000	0.000	0.300	0.000				
	dx[m]	dy[m]	A[m2]	t[m]		NA	Local directions		
1115	0.000	0.000	0.000	0.300	Pointno.		(x) 1.000	0.000	0.000
	0.000	0.000	0.000	0.300	Support		(y) 0.000	1.000	0.000
	0.000	0.000	0.000	0.300	Haunch		(z) 0.000	0.000	1.000
Number	x[m]	y[m]	z[m]	t[m]	h[m]	Title / Support Conditions			
1116	19.000	0.000	0.000	0.300	0.000				
	dx[m]	dy[m]	A[m2]	t[m]		NA	Local directions		
1116	0.000	0.000	0.000	0.300	Pointno.		(x) 1.000	0.000	0.000
	0.000	0.000	0.000	0.300	Support		(y) 0.000	1.000	0.000
	0.000	0.000	0.000	0.300	Haunch		(z) 0.000	0.000	1.000
Number	x[m]	y[m]	z[m]	t[m]	h[m]	Title / Support Conditions			
1117	37.300	0.000	0.000	0.300	0.000				
	dx[m]	dy[m]	A[m2]	t[m]		NA	Local directions		
1117	0.000	0.000	0.000	0.300	Pointno.		(x) 1.000	0.000	0.000
	0.000	0.000	0.000	0.300	Support		(y) 0.000	1.000	0.000
	0.000	0.000	0.000	0.300	Haunch		(z) 0.000	0.000	1.000
Number	x[m]	y[m]	z[m]	t[m]	h[m]	Title / Support Conditions			
1126	-1.500	0.000	32.000	0.000	0.000				
	dx[m]	dy[m]	A[m2]	t[m]		NA	Local directions		
1126	0.000	0.000	0.000	0.000	Pointno.		(x) 1.000	0.000	0.000
	0.000	0.000	0.000	0.000	Support		(y) 0.000	1.000	0.000
	0.000	0.000	0.000	0.000	Haunch		(z) 0.000	0.000	1.000
Number	x[m]	y[m]	z[m]	t[m]	h[m]	Title / Support Conditions			
1127	-1.500	0.000	12.000	0.000	0.000				
	dx[m]	dy[m]	A[m2]	t[m]		NA	Local directions		
1127	0.000	0.000	0.000	0.000	Pointno.		(x) 1.000	0.000	0.000
	0.000	0.000	0.000	0.000	Support		(y) 0.000	1.000	0.000
	0.000	0.000	0.000	0.000	Haunch		(z) 0.000	0.000	1.000
Number	x[m]	y[m]	z[m]	t[m]	h[m]	Title / Support Conditions			
1136	1.500	0.000	32.000	0.000	0.000				
	dx[m]	dy[m]	A[m2]	t[m]		NA	Local directions		
1136	0.000	0.000	0.000	0.000	Pointno.		(x) 1.000	0.000	0.000
	0.000	0.000	0.000	0.000	Support		(y) 0.000	1.000	0.000
	0.000	0.000	0.000	0.000	Haunch		(z) 0.000	0.000	1.000
Number	x[m]	y[m]	z[m]	t[m]	h[m]	Title / Support Conditions			
1137	1.500	0.000	12.000	0.000	0.000				
	dx[m]	dy[m]	A[m2]	t[m]		NA	Local directions		
1137	0.000	0.000	0.000	0.000	Pointno.		(x) 1.000	0.000	0.000
	0.000	0.000	0.000	0.000	Support		(y) 0.000	1.000	0.000
	0.000	0.000	0.000	0.000	Haunch		(z) 0.000	0.000	1.000
Number	x[m]	y[m]	z[m]	t[m]	h[m]	Title / Support Conditions			
1207	0.000	8.000	12.000	0.000	0.000				
	dx[m]	dy[m]	A[m2]	t[m]		NA	Local directions		
1207	0.000	0.000	0.000	0.000	Pointno.		(x) 1.000	0.000	0.000
	0.000	0.000	0.000	0.000	Support		(y) 0.000	1.000	0.000
	0.000	0.000	0.000	0.000	Haunch		(z) 0.000	0.000	1.000
Number	x[m]	y[m]	z[m]	t[m]	h[m]	Title / Support Conditions			
1208	0.000	8.000	3.550	0.000	0.000				
	dx[m]	dy[m]	A[m2]	t[m]		NA	Local directions		
1208	0.000	0.000	0.000	0.000	Pointno.		(x) 1.000	0.000	0.000
	0.000	0.000	0.000	0.000	Support		(y) 0.000	1.000	0.000
	0.000	0.000	0.000	0.000	Haunch		(z) 0.000	0.000	1.000

SOFiSTiK AG - www.sofistik.de

Composite bridge 38+50+38, b=14.25m, 2x2HL1100R HISTAR460 , slab 0.30m C30/37

Number	x[m]	y[m]	z[m]	t[m]	h[m]	Title / Support Conditions			
1209	0.000	8.000	3.050	0.000	0.000				
	dx[m]	dy[m]	A[m2]	t[m]		NA	Local directions		
1209	0.000	0.000	0.000	0.000	Pointno.		(x) 1.000	0.000	0.000
	0.000	0.000	0.000	0.000	Support		(y) 0.000	1.000	0.000
	0.000	0.000	0.000	0.000	Haunch		(z) 0.000	0.000	1.000
Number	x[m]	y[m]	z[m]	t[m]	h[m]	Title / Support Conditions			
1210	0.000	8.000	0.000	0.000	0.000				
	dx[m]	dy[m]	A[m2]	t[m]		NA	Local directions		
1210	0.000	0.000	0.000	0.000	Pointno.		(x) 1.000	0.000	0.000
	0.000	0.000	0.000	0.000	Support		(y) 0.000	1.000	0.000
	0.000	0.000	0.000	0.000	Haunch		(z) 0.000	0.000	1.000
Number	x[m]	y[m]	z[m]	t[m]	h[m]	Title / Support Conditions			
1211	0.900	8.000	0.000	0.000	0.000				
	dx[m]	dy[m]	A[m2]	t[m]		NA	Local directions		
1211	0.000	0.000	0.000	0.000	Pointno.		(x) 1.000	0.000	0.000
	0.000	0.000	0.000	0.000	Support		(y) 0.000	1.000	0.000
	0.000	0.000	0.000	0.000	Haunch		(z) 0.000	0.000	1.000
Number	x[m]	y[m]	z[m]	t[m]	h[m]	Title / Support Conditions			
1212	9.500	8.000	0.000	0.000	0.000				
	dx[m]	dy[m]	A[m2]	t[m]		NA	Local directions		
1212	0.000	0.000	0.000	0.000	Pointno.		(x) 1.000	0.000	0.000
	0.000	0.000	0.000	0.000	Support		(y) 0.000	1.000	0.000
	0.000	0.000	0.000	0.000	Haunch		(z) 0.000	0.000	1.000
Number	x[m]	y[m]	z[m]	t[m]	h[m]	Title / Support Conditions			
1213	25.500	8.000	0.000	0.000	0.000				
	dx[m]	dy[m]	A[m2]	t[m]		NA	Local directions		
1213	0.000	0.000	0.000	0.000	Pointno.		(x) 1.000	0.000	0.000
	0.000	0.000	0.000	0.000	Support		(y) 0.000	1.000	0.000
	0.000	0.000	0.000	0.000	Haunch		(z) 0.000	0.000	1.000
Number	x[m]	y[m]	z[m]	t[m]	h[m]	Title / Support Conditions			
1214	37.100	8.000	0.000	0.000	0.000				
	dx[m]	dy[m]	A[m2]	t[m]		NA	Local directions		
1214	0.000	0.000	0.000	0.000	Pointno.		(x) 1.000	0.000	0.000
	0.000	0.000	0.000	0.000	Support		(y) 0.000	1.000	0.000
	0.000	0.000	0.000	0.000	Haunch		(z) 0.000	0.000	1.000
Number	x[m]	y[m]	z[m]	t[m]	h[m]	Title / Support Conditions			
1226	-1.500	8.000	32.000	0.000	0.000				
	dx[m]	dy[m]	A[m2]	t[m]		NA	Local directions		
1226	0.000	0.000	0.000	0.000	Pointno.		(x) 1.000	0.000	0.000
	0.000	0.000	0.000	0.000	Support		(y) 0.000	1.000	0.000
	0.000	0.000	0.000	0.000	Haunch		(z) 0.000	0.000	1.000
Number	x[m]	y[m]	z[m]	t[m]	h[m]	Title / Support Conditions			
1227	-1.500	8.000	12.000	0.000	0.000				
	dx[m]	dy[m]	A[m2]	t[m]		NA	Local directions		
1227	0.000	0.000	0.000	0.000	Pointno.		(x) 1.000	0.000	0.000
	0.000	0.000	0.000	0.000	Support		(y) 0.000	1.000	0.000
	0.000	0.000	0.000	0.000	Haunch		(z) 0.000	0.000	1.000
Number	x[m]	y[m]	z[m]	t[m]	h[m]	Title / Support Conditions			
1236	1.500	8.000	32.000	0.000	0.000				
	dx[m]	dy[m]	A[m2]	t[m]		NA	Local directions		
1236	0.000	0.000	0.000	0.000	Pointno.		(x) 1.000	0.000	0.000
	0.000	0.000	0.000	0.000	Support		(y) 0.000	1.000	0.000
	0.000	0.000	0.000	0.000	Haunch		(z) 0.000	0.000	1.000
Number	x[m]	y[m]	z[m]	t[m]	h[m]	Title / Support Conditions			
1237	1.500	8.000	12.000	0.000	0.000				
	dx[m]	dy[m]	A[m2]	t[m]		NA	Local directions		
1237	0.000	0.000	0.000	0.000	Pointno.		(x) 1.000	0.000	0.000
	0.000	0.000	0.000	0.000	Support		(y) 0.000	1.000	0.000
	0.000	0.000	0.000	0.000	Haunch		(z) 0.000	0.000	1.000
Number	x[m]	y[m]	z[m]	t[m]	h[m]	Title / Support Conditions			
1803	-1.000	-3.125	3.550	0.000	0.000				
	dx[m]	dy[m]	A[m2]	t[m]		NA	Local directions		
1803	0.000	0.000	0.000	0.000	Pointno.		(x) 1.000	0.000	0.000
	0.000	0.000	0.000	0.000	Support		(y) 0.000	1.000	0.000
	0.000	0.000	0.000	0.000	Haunch		(z) 0.000	0.000	1.000

SOFiSTiK AG - www.sofistik.de

Composite bridge 38+50+38, b=14.25m, 2x2HL1100R HISTAR460 , slab 0.30m C30/37

Number	x[m]	y[m]	z[m]	t[m]	h[m]	Title / Support Conditions			
1804	-1.000	-3.125	-0.350	0.000	0.000				
	dx[m]	dy[m]	A[m2]	t[m]		NA	Local directions		
1804	0.000	0.000	0.000	0.000	Pointno.		(x)	1.000	0.000	0.000
	0.000	0.000	0.000	0.000	Support		(y)	0.000	1.000	0.000
	0.000	0.000	0.000	0.000	Haunch		(z)	0.000	0.000	1.000
Number	x[m]	y[m]	z[m]	t[m]	h[m]	Title / Support Conditions			
1807	0.000	-3.125	12.000	0.000	0.000				
	dx[m]	dy[m]	A[m2]	t[m]		NA	Local directions		
1807	0.000	0.000	0.000	0.000	Pointno.		(x)	1.000	0.000	0.000
	0.000	0.000	0.000	0.000	Support		(y)	0.000	1.000	0.000
	0.000	0.000	0.000	0.000	Haunch		(z)	0.000	0.000	1.000
Number	x[m]	y[m]	z[m]	t[m]	h[m]	Title / Support Conditions			
1808	0.000	-3.125	3.550	0.000	0.000				
	dx[m]	dy[m]	A[m2]	t[m]		NA	Local directions		
1808	0.000	0.000	0.000	0.000	Pointno.		(x)	1.000	0.000	0.000
	0.000	0.000	0.000	0.000	Support		(y)	0.000	1.000	0.000
	0.000	0.000	0.000	0.000	Haunch		(z)	0.000	0.000	1.000
Number	x[m]	y[m]	z[m]	t[m]	h[m]	Title / Support Conditions			
1810	0.000	-3.125	0.000	0.000	0.000				
	dx[m]	dy[m]	A[m2]	t[m]		NA	Local directions		
1810	0.000	0.000	0.000	0.000	Pointno.		(x)	1.000	0.000	0.000
	0.000	0.000	0.000	0.000	Support		(y)	0.000	1.000	0.000
	0.000	0.000	0.000	0.000	Haunch		(z)	0.000	0.000	1.000
Number	x[m]	y[m]	z[m]	t[m]	h[m]	Title / Support Conditions			
1811	0.500	-3.125	0.000	0.000	0.000				
	dx[m]	dy[m]	A[m2]	t[m]		NA	Local directions		
1811	0.000	0.000	0.000	0.000	Pointno.		(x)	1.000	0.000	0.000
	0.000	0.000	0.000	0.000	Support		(y)	0.000	1.000	0.000
	0.000	0.000	0.000	0.000	Haunch		(z)	0.000	0.000	1.000
Number	x[m]	y[m]	z[m]	t[m]	h[m]	Title / Support Conditions			
1812	9.500	-3.125	0.000	0.000	0.000				
	dx[m]	dy[m]	A[m2]	t[m]		NA	Local directions		
1812	0.000	0.000	0.000	0.000	Pointno.		(x)	1.000	0.000	0.000
	0.000	0.000	0.000	0.000	Support		(y)	0.000	1.000	0.000
	0.000	0.000	0.000	0.000	Haunch		(z)	0.000	0.000	1.000
Number	x[m]	y[m]	z[m]	t[m]	h[m]	Title / Support Conditions			
1813	25.500	-3.125	0.000	0.000	0.000				
	dx[m]	dy[m]	A[m2]	t[m]		NA	Local directions		
1813	0.000	0.000	0.000	0.000	Pointno.		(x)	1.000	0.000	0.000
	0.000	0.000	0.000	0.000	Support		(y)	0.000	1.000	0.000
	0.000	0.000	0.000	0.000	Haunch		(z)	0.000	0.000	1.000
Number	x[m]	y[m]	z[m]	t[m]	h[m]	Title / Support Conditions			
1814	37.500	-3.125	0.000	0.000	0.000				
	dx[m]	dy[m]	A[m2]	t[m]		NA	Local directions		
1814	0.000	0.000	0.000	0.000	Pointno.		(x)	1.000	0.000	0.000
	0.000	0.000	0.000	0.000	Support		(y)	0.000	1.000	0.000
	0.000	0.000	0.000	0.000	Haunch		(z)	0.000	0.000	1.000
Number	x[m]	y[m]	z[m]	t[m]	h[m]	Title / Support Conditions			
1903	-1.000	11.125	3.550	0.000	0.000				
	dx[m]	dy[m]	A[m2]	t[m]		NA	Local directions		
1903	0.000	0.000	0.000	0.000	Pointno.		(x)	1.000	0.000	0.000
	0.000	0.000	0.000	0.000	Support		(y)	0.000	1.000	0.000
	0.000	0.000	0.000	0.000	Haunch		(z)	0.000	0.000	1.000
Number	x[m]	y[m]	z[m]	t[m]	h[m]	Title / Support Conditions			
1904	-1.000	11.125	-0.350	0.000	0.000				
	dx[m]	dy[m]	A[m2]	t[m]		NA	Local directions		
1904	0.000	0.000	0.000	0.000	Pointno.		(x)	1.000	0.000	0.000
	0.000	0.000	0.000	0.000	Support		(y)	0.000	1.000	0.000
	0.000	0.000	0.000	0.000	Haunch		(z)	0.000	0.000	1.000
Number	x[m]	y[m]	z[m]	t[m]	h[m]	Title / Support Conditions			
1907	0.000	11.125	12.000	0.000	0.000				
	dx[m]	dy[m]	A[m2]	t[m]		NA	Local directions		
1907	0.000	0.000	0.000	0.000	Pointno.		(x)	1.000	0.000	0.000
	0.000	0.000	0.000	0.000	Support		(y)	0.000	1.000	0.000
	0.000	0.000	0.000	0.000	Haunch		(z)	0.000	0.000	1.000

SOFiSTiK AG - www.sofistik.de

Composite bridge 38+50+38, b=14.25m, 2x2HL1100R HISTAR460 , slab 0.30m C30/37

Number	x[m]	y[m]	z[m]	t[m]	h[m]	Title / Support Conditions			
1908	0.000	11.125	3.550	0.000	0.000				
	dx[m]	dy[m]	A[m2]	t[m]		NA	Local directions		
1908	0.000	0.000	0.000	0.000	Pointno.		(x) 1.000	0.000	0.000
	0.000	0.000	0.000	0.000	Support		(y) 0.000	1.000	0.000
	0.000	0.000	0.000	0.000	Haunch		(z) 0.000	0.000	1.000
Number	x[m]	y[m]	z[m]	t[m]	h[m]	Title / Support Conditions			
1910	0.000	11.125	0.000	0.000	0.000				
	dx[m]	dy[m]	A[m2]	t[m]		NA	Local directions		
1910	0.000	0.000	0.000	0.000	Pointno.		(x) 1.000	0.000	0.000
	0.000	0.000	0.000	0.000	Support		(y) 0.000	1.000	0.000
	0.000	0.000	0.000	0.000	Haunch		(z) 0.000	0.000	1.000
Number	x[m]	y[m]	z[m]	t[m]	h[m]	Title / Support Conditions			
1911	0.500	11.125	0.000	0.000	0.000				
	dx[m]	dy[m]	A[m2]	t[m]		NA	Local directions		
1911	0.000	0.000	0.000	0.000	Pointno.		(x) 1.000	0.000	0.000
	0.000	0.000	0.000	0.000	Support		(y) 0.000	1.000	0.000
	0.000	0.000	0.000	0.000	Haunch		(z) 0.000	0.000	1.000
Number	x[m]	y[m]	z[m]	t[m]	h[m]	Title / Support Conditions			
1912	9.500	11.125	0.000	0.000	0.000				
	dx[m]	dy[m]	A[m2]	t[m]		NA	Local directions		
1912	0.000	0.000	0.000	0.000	Pointno.		(x) 1.000	0.000	0.000
	0.000	0.000	0.000	0.000	Support		(y) 0.000	1.000	0.000
	0.000	0.000	0.000	0.000	Haunch		(z) 0.000	0.000	1.000
Number	x[m]	y[m]	z[m]	t[m]	h[m]	Title / Support Conditions			
1913	25.500	11.125	0.000	0.000	0.000				
	dx[m]	dy[m]	A[m2]	t[m]		NA	Local directions		
1913	0.000	0.000	0.000	0.000	Pointno.		(x) 1.000	0.000	0.000
	0.000	0.000	0.000	0.000	Support		(y) 0.000	1.000	0.000
	0.000	0.000	0.000	0.000	Haunch		(z) 0.000	0.000	1.000
Number	x[m]	y[m]	z[m]	t[m]	h[m]	Title / Support Conditions			
1914	37.500	11.125	0.000	0.000	0.000				
	dx[m]	dy[m]	A[m2]	t[m]		NA	Local directions		
1914	0.000	0.000	0.000	0.000	Pointno.		(x) 1.000	0.000	0.000
	0.000	0.000	0.000	0.000	Support		(y) 0.000	1.000	0.000
	0.000	0.000	0.000	0.000	Haunch		(z) 0.000	0.000	1.000
Number	x[m]	y[m]	z[m]	t[m]	h[m]	Title / Support Conditions			
2010	38.000	11.125	0.000	0.000	0.000				
	dx[m]	dy[m]	A[m2]	t[m]		NA	Local directions		
2010	0.000	0.000	0.000	0.000	Pointno.		(x) 1.000	0.000	0.000
	0.000	0.000	0.000	0.000	Support		(y) 0.000	1.000	0.000
	0.000	0.000	0.000	0.000	Haunch		(z) 0.000	0.000	1.000
Number	x[m]	y[m]	z[m]	t[m]	h[m]	Title / Support Conditions			
2011	38.500	11.125	0.000	0.000	0.000				
	dx[m]	dy[m]	A[m2]	t[m]		NA	Local directions		
2011	0.000	0.000	0.000	0.000	Pointno.		(x) 1.000	0.000	0.000
	0.000	0.000	0.000	0.000	Support		(y) 0.000	1.000	0.000
	0.000	0.000	0.000	0.000	Haunch		(z) 0.000	0.000	1.000
Number	x[m]	y[m]	z[m]	t[m]	h[m]	Title / Support Conditions			
2012	50.500	11.125	0.000	0.000	0.000				
	dx[m]	dy[m]	A[m2]	t[m]		NA	Local directions		
2012	0.000	0.000	0.000	0.000	Pointno.		(x) 1.000	0.000	0.000
	0.000	0.000	0.000	0.000	Support		(y) 0.000	1.000	0.000
	0.000	0.000	0.000	0.000	Haunch		(z) 0.000	0.000	1.000
Number	x[m]	y[m]	z[m]	t[m]	h[m]	Title / Support Conditions			
2013	75.500	11.125	0.000	0.000	0.000				
	dx[m]	dy[m]	A[m2]	t[m]		NA	Local directions		
2013	0.000	0.000	0.000	0.000	Pointno.		(x) 1.000	0.000	0.000
	0.000	0.000	0.000	0.000	Support		(y) 0.000	1.000	0.000
	0.000	0.000	0.000	0.000	Haunch		(z) 0.000	0.000	1.000
Number	x[m]	y[m]	z[m]	t[m]	h[m]	Title / Support Conditions			
2014	87.500	11.125	0.000	0.000	0.000				
	dx[m]	dy[m]	A[m2]	t[m]		NA	Local directions		
2014	0.000	0.000	0.000	0.000	Pointno.		(x) 1.000	0.000	0.000
	0.000	0.000	0.000	0.000	Support		(y) 0.000	1.000	0.000
	0.000	0.000	0.000	0.000	Haunch		(z) 0.000	0.000	1.000

SOFiSTiK AG - www.sofistik.de

Composite bridge 38+50+38, b=14.25m, 2x2HL1100R HISTAR460 , slab 0.30m C30/37

Number	x[m]	y[m]	z[m]	t[m]	h[m]	Title / Support Conditions			
2107	38.000	0.000	12.000	0.000	0.000				
	dx[m]	dy[m]	A[m2]	t[m]		NA	Local directions		
2107	0.000	0.000	0.000	0.000	Pointno.	(x)	1.000	0.000	0.000
	0.000	0.000	0.000	0.000	Support	(y)	0.000	1.000	0.000
	0.000	0.000	0.000	0.000	Haunch	(z)	0.000	0.000	1.000
Number	x[m]	y[m]	z[m]	t[m]	h[m]	Title / Support Conditions			
2108	38.000	0.000	3.550	0.000	0.000				
	dx[m]	dy[m]	A[m2]	t[m]		NA	Local directions		
2108	0.000	0.000	0.000	0.000	Pointno.	(x)	1.000	0.000	0.000
	0.000	0.000	0.000	0.000	Support	(y)	0.000	1.000	0.000
	0.000	0.000	0.000	0.000	Haunch	(z)	0.000	0.000	1.000
Number	x[m]	y[m]	z[m]	t[m]	h[m]	Title / Support Conditions			
2109	38.000	0.000	3.050	0.000	0.000				
	dx[m]	dy[m]	A[m2]	t[m]		NA	Local directions		
2109	0.000	0.000	0.000	0.000	Pointno.	(x)	1.000	0.000	0.000
	0.000	0.000	0.000	0.000	Support	(y)	0.000	1.000	0.000
	0.000	0.000	0.000	0.000	Haunch	(z)	0.000	0.000	1.000
Number	x[m]	y[m]	z[m]	t[m]	h[m]	Title / Support Conditions			
2110	38.000	0.000	0.000	0.000	0.000				
	dx[m]	dy[m]	A[m2]	t[m]		NA	Local directions		
2110	0.000	0.000	0.000	0.000	Pointno.	(x)	1.000	0.000	0.000
	0.000	0.000	0.000	0.000	Support	(y)	0.000	1.000	0.000
	0.000	0.000	0.000	0.000	Haunch	(z)	0.000	0.000	1.000
Number	x[m]	y[m]	z[m]	t[m]	h[m]	Title / Support Conditions			
2111	38.900	0.000	0.000	0.000	0.000				
	dx[m]	dy[m]	A[m2]	t[m]		NA	Local directions		
2111	0.000	0.000	0.000	0.000	Pointno.	(x)	1.000	0.000	0.000
	0.000	0.000	0.000	0.000	Support	(y)	0.000	1.000	0.000
	0.000	0.000	0.000	0.000	Haunch	(z)	0.000	0.000	1.000
Number	x[m]	y[m]	z[m]	t[m]	h[m]	Title / Support Conditions			
2112	50.500	0.000	0.000	0.000	0.000				
	dx[m]	dy[m]	A[m2]	t[m]		NA	Local directions		
2112	0.000	0.000	0.000	0.000	Pointno.	(x)	1.000	0.000	0.000
	0.000	0.000	0.000	0.000	Support	(y)	0.000	1.000	0.000
	0.000	0.000	0.000	0.000	Haunch	(z)	0.000	0.000	1.000
Number	x[m]	y[m]	z[m]	t[m]	h[m]	Title / Support Conditions			
2113	75.500	0.000	0.000	0.000	0.000				
	dx[m]	dy[m]	A[m2]	t[m]		NA	Local directions		
2113	0.000	0.000	0.000	0.000	Pointno.	(x)	1.000	0.000	0.000
	0.000	0.000	0.000	0.000	Support	(y)	0.000	1.000	0.000
	0.000	0.000	0.000	0.000	Haunch	(z)	0.000	0.000	1.000
Number	x[m]	y[m]	z[m]	t[m]	h[m]	Title / Support Conditions			
2114	87.100	0.000	0.000	0.000	0.000				
	dx[m]	dy[m]	A[m2]	t[m]		NA	Local directions		
2114	0.000	0.000	0.000	0.000	Pointno.	(x)	1.000	0.000	0.000
	0.000	0.000	0.000	0.000	Support	(y)	0.000	1.000	0.000
	0.000	0.000	0.000	0.000	Haunch	(z)	0.000	0.000	1.000
Number	x[m]	y[m]	z[m]	t[m]	h[m]	Title / Support Conditions			
2115	38.700	0.000	0.000	0.300	0.000				
	dx[m]	dy[m]	A[m2]	t[m]		NA	Local directions		
2115	0.000	0.000	0.000	0.300	Pointno.	(x)	1.000	0.000	0.000
	0.000	0.000	0.000	0.300	Support	(y)	0.000	1.000	0.000
	0.000	0.000	0.000	0.300	Haunch	(z)	0.000	0.000	1.000
Number	x[m]	y[m]	z[m]	t[m]	h[m]	Title / Support Conditions			
2116	63.000	0.000	0.000	0.300	0.000				
	dx[m]	dy[m]	A[m2]	t[m]		NA	Local directions		
2116	0.000	0.000	0.000	0.300	Pointno.	(x)	1.000	0.000	0.000
	0.000	0.000	0.000	0.300	Support	(y)	0.000	1.000	0.000
	0.000	0.000	0.000	0.300	Haunch	(z)	0.000	0.000	1.000
Number	x[m]	y[m]	z[m]	t[m]	h[m]	Title / Support Conditions			
2117	87.300	0.000	0.000	0.300	0.000				
	dx[m]	dy[m]	A[m2]	t[m]		NA	Local directions		
2117	0.000	0.000	0.000	0.300	Pointno.	(x)	1.000	0.000	0.000
	0.000	0.000	0.000	0.300	Support	(y)	0.000	1.000	0.000
	0.000	0.000	0.000	0.300	Haunch	(z)	0.000	0.000	1.000

SOFiSTiK AG - www.sofistik.de

Composite bridge 38+50+38, b=14.25m, 2x2HL1100R HISTAR460 , slab 0.30m C30/37

Number	x[m]	y[m]	z[m]	t[m]	h[m]	Title / Support Conditions			
2126	36.500	0.000	32.000	0.000	0.000				
	dx[m]	dy[m]	A[m2]	t[m]		NA	Local directions		
2126	0.000	0.000	0.000	0.000	Pointno.		(x) 1.000	0.000	0.000
	0.000	0.000	0.000	0.000	Support		(y) 0.000	1.000	0.000
	0.000	0.000	0.000	0.000	Haunch		(z) 0.000	0.000	1.000
Number	x[m]	y[m]	z[m]	t[m]	h[m]	Title / Support Conditions			
2127	36.500	0.000	12.000	0.000	0.000				
	dx[m]	dy[m]	A[m2]	t[m]		NA	Local directions		
2127	0.000	0.000	0.000	0.000	Pointno.		(x) 1.000	0.000	0.000
	0.000	0.000	0.000	0.000	Support		(y) 0.000	1.000	0.000
	0.000	0.000	0.000	0.000	Haunch		(z) 0.000	0.000	1.000
Number	x[m]	y[m]	z[m]	t[m]	h[m]	Title / Support Conditions			
2136	39.500	0.000	32.000	0.000	0.000				
	dx[m]	dy[m]	A[m2]	t[m]		NA	Local directions		
2136	0.000	0.000	0.000	0.000	Pointno.		(x) 1.000	0.000	0.000
	0.000	0.000	0.000	0.000	Support		(y) 0.000	1.000	0.000
	0.000	0.000	0.000	0.000	Haunch		(z) 0.000	0.000	1.000
Number	x[m]	y[m]	z[m]	t[m]	h[m]	Title / Support Conditions			
2137	39.500	0.000	12.000	0.000	0.000				
	dx[m]	dy[m]	A[m2]	t[m]		NA	Local directions		
2137	0.000	0.000	0.000	0.000	Pointno.		(x) 1.000	0.000	0.000
	0.000	0.000	0.000	0.000	Support		(y) 0.000	1.000	0.000
	0.000	0.000	0.000	0.000	Haunch		(z) 0.000	0.000	1.000
Number	x[m]	y[m]	z[m]	t[m]	h[m]	Title / Support Conditions			
2207	38.000	8.000	12.000	0.000	0.000				
	dx[m]	dy[m]	A[m2]	t[m]		NA	Local directions		
2207	0.000	0.000	0.000	0.000	Pointno.		(x) 1.000	0.000	0.000
	0.000	0.000	0.000	0.000	Support		(y) 0.000	1.000	0.000
	0.000	0.000	0.000	0.000	Haunch		(z) 0.000	0.000	1.000
Number	x[m]	y[m]	z[m]	t[m]	h[m]	Title / Support Conditions			
2208	38.000	8.000	3.550	0.000	0.000				
	dx[m]	dy[m]	A[m2]	t[m]		NA	Local directions		
2208	0.000	0.000	0.000	0.000	Pointno.		(x) 1.000	0.000	0.000
	0.000	0.000	0.000	0.000	Support		(y) 0.000	1.000	0.000
	0.000	0.000	0.000	0.000	Haunch		(z) 0.000	0.000	1.000
Number	x[m]	y[m]	z[m]	t[m]	h[m]	Title / Support Conditions			
2209	38.000	8.000	3.050	0.000	0.000				
	dx[m]	dy[m]	A[m2]	t[m]		NA	Local directions		
2209	0.000	0.000	0.000	0.000	Pointno.		(x) 1.000	0.000	0.000
	0.000	0.000	0.000	0.000	Support		(y) 0.000	1.000	0.000
	0.000	0.000	0.000	0.000	Haunch		(z) 0.000	0.000	1.000
Number	x[m]	y[m]	z[m]	t[m]	h[m]	Title / Support Conditions			
2210	38.000	8.000	0.000	0.000	0.000				
	dx[m]	dy[m]	A[m2]	t[m]		NA	Local directions		
2210	0.000	0.000	0.000	0.000	Pointno.		(x) 1.000	0.000	0.000
	0.000	0.000	0.000	0.000	Support		(y) 0.000	1.000	0.000
	0.000	0.000	0.000	0.000	Haunch		(z) 0.000	0.000	1.000
Number	x[m]	y[m]	z[m]	t[m]	h[m]	Title / Support Conditions			
2211	38.900	8.000	0.000	0.000	0.000				
	dx[m]	dy[m]	A[m2]	t[m]		NA	Local directions		
2211	0.000	0.000	0.000	0.000	Pointno.		(x) 1.000	0.000	0.000
	0.000	0.000	0.000	0.000	Support		(y) 0.000	1.000	0.000
	0.000	0.000	0.000	0.000	Haunch		(z) 0.000	0.000	1.000
Number	x[m]	y[m]	z[m]	t[m]	h[m]	Title / Support Conditions			
2212	50.500	8.000	0.000	0.000	0.000				
	dx[m]	dy[m]	A[m2]	t[m]		NA	Local directions		
2212	0.000	0.000	0.000	0.000	Pointno.		(x) 1.000	0.000	0.000
	0.000	0.000	0.000	0.000	Support		(y) 0.000	1.000	0.000
	0.000	0.000	0.000	0.000	Haunch		(z) 0.000	0.000	1.000
Number	x[m]	y[m]	z[m]	t[m]	h[m]	Title / Support Conditions			
2213	75.500	8.000	0.000	0.000	0.000				
	dx[m]	dy[m]	A[m2]	t[m]		NA	Local directions		
2213	0.000	0.000	0.000	0.000	Pointno.		(x) 1.000	0.000	0.000
	0.000	0.000	0.000	0.000	Support		(y) 0.000	1.000	0.000
	0.000	0.000	0.000	0.000	Haunch		(z) 0.000	0.000	1.000

SOFiSTiK AG - www.sofistik.de

Composite bridge 38+50+38, b=14.25m, 2x2HL1100R HISTAR460 , slab 0.30m C30/37

Number	x[m]	y[m]	z[m]	t[m]	h[m]	Title / Support Conditions			
2214	87.100	8.000	0.000	0.000	0.000				
	dx[m]	dy[m]	A[m2]	t[m]		NA	Local directions		
2214	0.000	0.000	0.000	0.000	Pointno.		(x) 1.000	0.000	0.000
	0.000	0.000	0.000	0.000	Support		(y) 0.000	1.000	0.000
	0.000	0.000	0.000	0.000	Haunch		(z) 0.000	0.000	1.000
Number	x[m]	y[m]	z[m]	t[m]	h[m]	Title / Support Conditions			
2226	36.500	8.000	32.000	0.000	0.000				
	dx[m]	dy[m]	A[m2]	t[m]		NA	Local directions		
2226	0.000	0.000	0.000	0.000	Pointno.		(x) 1.000	0.000	0.000
	0.000	0.000	0.000	0.000	Support		(y) 0.000	1.000	0.000
	0.000	0.000	0.000	0.000	Haunch		(z) 0.000	0.000	1.000
Number	x[m]	y[m]	z[m]	t[m]	h[m]	Title / Support Conditions			
2227	36.500	8.000	12.000	0.000	0.000				
	dx[m]	dy[m]	A[m2]	t[m]		NA	Local directions		
2227	0.000	0.000	0.000	0.000	Pointno.		(x) 1.000	0.000	0.000
	0.000	0.000	0.000	0.000	Support		(y) 0.000	1.000	0.000
	0.000	0.000	0.000	0.000	Haunch		(z) 0.000	0.000	1.000
Number	x[m]	y[m]	z[m]	t[m]	h[m]	Title / Support Conditions			
2236	39.500	8.000	32.000	0.000	0.000				
	dx[m]	dy[m]	A[m2]	t[m]		NA	Local directions		
2236	0.000	0.000	0.000	0.000	Pointno.		(x) 1.000	0.000	0.000
	0.000	0.000	0.000	0.000	Support		(y) 0.000	1.000	0.000
	0.000	0.000	0.000	0.000	Haunch		(z) 0.000	0.000	1.000
Number	x[m]	y[m]	z[m]	t[m]	h[m]	Title / Support Conditions			
2237	39.500	8.000	12.000	0.000	0.000				
	dx[m]	dy[m]	A[m2]	t[m]		NA	Local directions		
2237	0.000	0.000	0.000	0.000	Pointno.		(x) 1.000	0.000	0.000
	0.000	0.000	0.000	0.000	Support		(y) 0.000	1.000	0.000
	0.000	0.000	0.000	0.000	Haunch		(z) 0.000	0.000	1.000
Number	x[m]	y[m]	z[m]	t[m]	h[m]	Title / Support Conditions			
2807	38.000	-3.125	12.000	0.000	0.000				
	dx[m]	dy[m]	A[m2]	t[m]		NA	Local directions		
2807	0.000	0.000	0.000	0.000	Pointno.		(x) 1.000	0.000	0.000
	0.000	0.000	0.000	0.000	Support		(y) 0.000	1.000	0.000
	0.000	0.000	0.000	0.000	Haunch		(z) 0.000	0.000	1.000
Number	x[m]	y[m]	z[m]	t[m]	h[m]	Title / Support Conditions			
2808	38.000	-3.125	3.550	0.000	0.000				
	dx[m]	dy[m]	A[m2]	t[m]		NA	Local directions		
2808	0.000	0.000	0.000	0.000	Pointno.		(x) 1.000	0.000	0.000
	0.000	0.000	0.000	0.000	Support		(y) 0.000	1.000	0.000
	0.000	0.000	0.000	0.000	Haunch		(z) 0.000	0.000	1.000
Number	x[m]	y[m]	z[m]	t[m]	h[m]	Title / Support Conditions			
2810	38.000	-3.125	0.000	0.000	0.000				
	dx[m]	dy[m]	A[m2]	t[m]		NA	Local directions		
2810	0.000	0.000	0.000	0.000	Pointno.		(x) 1.000	0.000	0.000
	0.000	0.000	0.000	0.000	Support		(y) 0.000	1.000	0.000
	0.000	0.000	0.000	0.000	Haunch		(z) 0.000	0.000	1.000
Number	x[m]	y[m]	z[m]	t[m]	h[m]	Title / Support Conditions			
2811	38.500	-3.125	0.000	0.000	0.000				
	dx[m]	dy[m]	A[m2]	t[m]		NA	Local directions		
2811	0.000	0.000	0.000	0.000	Pointno.		(x) 1.000	0.000	0.000
	0.000	0.000	0.000	0.000	Support		(y) 0.000	1.000	0.000
	0.000	0.000	0.000	0.000	Haunch		(z) 0.000	0.000	1.000
Number	x[m]	y[m]	z[m]	t[m]	h[m]	Title / Support Conditions			
2812	50.500	-3.125	0.000	0.000	0.000				
	dx[m]	dy[m]	A[m2]	t[m]		NA	Local directions		
2812	0.000	0.000	0.000	0.000	Pointno.		(x) 1.000	0.000	0.000
	0.000	0.000	0.000	0.000	Support		(y) 0.000	1.000	0.000
	0.000	0.000	0.000	0.000	Haunch		(z) 0.000	0.000	1.000
Number	x[m]	y[m]	z[m]	t[m]	h[m]	Title / Support Conditions			
2813	75.500	-3.125	0.000	0.000	0.000				
	dx[m]	dy[m]	A[m2]	t[m]		NA	Local directions		
2813	0.000	0.000	0.000	0.000	Pointno.		(x) 1.000	0.000	0.000
	0.000	0.000	0.000	0.000	Support		(y) 0.000	1.000	0.000
	0.000	0.000	0.000	0.000	Haunch		(z) 0.000	0.000	1.000

SOFiSTiK AG - www.sofistik.de

Composite bridge 38+50+38, b=14.25m, 2x2HL1100R HISTAR460 , slab 0.30m C30/37

Number	x[m]	y[m]	z[m]	t[m]	h[m]	Title / Support Conditions			
2814	87.500	-3.125	0.000	0.000	0.000				
	dx[m]	dy[m]	A[m2]	t[m]		NA	Local directions		
2814	0.000	0.000	0.000	0.000	Pointno.		(x) 1.000	0.000	0.000
	0.000	0.000	0.000	0.000	Support		(y) 0.000	1.000	0.000
	0.000	0.000	0.000	0.000	Haunch		(z) 0.000	0.000	1.000
Number	x[m]	y[m]	z[m]	t[m]	h[m]	Title / Support Conditions			
2907	38.000	11.125	12.000	0.000	0.000				
	dx[m]	dy[m]	A[m2]	t[m]		NA	Local directions		
2907	0.000	0.000	0.000	0.000	Pointno.		(x) 1.000	0.000	0.000
	0.000	0.000	0.000	0.000	Support		(y) 0.000	1.000	0.000
	0.000	0.000	0.000	0.000	Haunch		(z) 0.000	0.000	1.000
Number	x[m]	y[m]	z[m]	t[m]	h[m]	Title / Support Conditions			
2908	38.000	11.125	3.550	0.000	0.000				
	dx[m]	dy[m]	A[m2]	t[m]		NA	Local directions		
2908	0.000	0.000	0.000	0.000	Pointno.		(x) 1.000	0.000	0.000
	0.000	0.000	0.000	0.000	Support		(y) 0.000	1.000	0.000
	0.000	0.000	0.000	0.000	Haunch		(z) 0.000	0.000	1.000
Number	x[m]	y[m]	z[m]	t[m]	h[m]	Title / Support Conditions			
2910	38.000	11.125	0.000	0.000	0.000				
	dx[m]	dy[m]	A[m2]	t[m]		NA	Local directions		
2910	0.000	0.000	0.000	0.000	Pointno.		(x) 1.000	0.000	0.000
	0.000	0.000	0.000	0.000	Support		(y) 0.000	1.000	0.000
	0.000	0.000	0.000	0.000	Haunch		(z) 0.000	0.000	1.000
Number	x[m]	y[m]	z[m]	t[m]	h[m]	Title / Support Conditions			
2911	38.500	11.125	0.000	0.000	0.000				
	dx[m]	dy[m]	A[m2]	t[m]		NA	Local directions		
2911	0.000	0.000	0.000	0.000	Pointno.		(x) 1.000	0.000	0.000
	0.000	0.000	0.000	0.000	Support		(y) 0.000	1.000	0.000
	0.000	0.000	0.000	0.000	Haunch		(z) 0.000	0.000	1.000
Number	x[m]	y[m]	z[m]	t[m]	h[m]	Title / Support Conditions			
2912	50.500	11.125	0.000	0.000	0.000				
	dx[m]	dy[m]	A[m2]	t[m]		NA	Local directions		
2912	0.000	0.000	0.000	0.000	Pointno.		(x) 1.000	0.000	0.000
	0.000	0.000	0.000	0.000	Support		(y) 0.000	1.000	0.000
	0.000	0.000	0.000	0.000	Haunch		(z) 0.000	0.000	1.000
Number	x[m]	y[m]	z[m]	t[m]	h[m]	Title / Support Conditions			
2913	75.500	11.125	0.000	0.000	0.000				
	dx[m]	dy[m]	A[m2]	t[m]		NA	Local directions		
2913	0.000	0.000	0.000	0.000	Pointno.		(x) 1.000	0.000	0.000
	0.000	0.000	0.000	0.000	Support		(y) 0.000	1.000	0.000
	0.000	0.000	0.000	0.000	Haunch		(z) 0.000	0.000	1.000
Number	x[m]	y[m]	z[m]	t[m]	h[m]	Title / Support Conditions			
2914	87.500	11.125	0.000	0.000	0.000				
	dx[m]	dy[m]	A[m2]	t[m]		NA	Local directions		
2914	0.000	0.000	0.000	0.000	Pointno.		(x) 1.000	0.000	0.000
	0.000	0.000	0.000	0.000	Support		(y) 0.000	1.000	0.000
	0.000	0.000	0.000	0.000	Haunch		(z) 0.000	0.000	1.000
Number	x[m]	y[m]	z[m]	t[m]	h[m]	Title / Support Conditions			
3010	88.000	11.125	0.000	0.000	0.000				
	dx[m]	dy[m]	A[m2]	t[m]		NA	Local directions		
3010	0.000	0.000	0.000	0.000	Pointno.		(x) 1.000	0.000	0.000
	0.000	0.000	0.000	0.000	Support		(y) 0.000	1.000	0.000
	0.000	0.000	0.000	0.000	Haunch		(z) 0.000	0.000	1.000
Number	x[m]	y[m]	z[m]	t[m]	h[m]	Title / Support Conditions			
3011	88.500	11.125	0.000	0.000	0.000				
	dx[m]	dy[m]	A[m2]	t[m]		NA	Local directions		
3011	0.000	0.000	0.000	0.000	Pointno.		(x) 1.000	0.000	0.000
	0.000	0.000	0.000	0.000	Support		(y) 0.000	1.000	0.000
	0.000	0.000	0.000	0.000	Haunch		(z) 0.000	0.000	1.000
Number	x[m]	y[m]	z[m]	t[m]	h[m]	Title / Support Conditions			
3012	100.500	11.125	0.000	0.000	0.000				
	dx[m]	dy[m]	A[m2]	t[m]		NA	Local directions		
3012	0.000	0.000	0.000	0.000	Pointno.		(x) 1.000	0.000	0.000
	0.000	0.000	0.000	0.000	Support		(y) 0.000	1.000	0.000
	0.000	0.000	0.000	0.000	Haunch		(z) 0.000	0.000	1.000

SOFiSTiK AG - www.sofistik.de

Composite bridge 38+50+38, b=14.25m, 2x2HL1100R HISTAR460 , slab 0.30m C30/37

Number	x[m]	y[m]	z[m]	t[m]	h[m]	Title / Support Conditions			
3013	116.500	11.125	0.000	0.000	0.000				
	dx[m]	dy[m]	A[m2]	t[m]		NA	Local directions		
3013	0.000	0.000	0.000	0.000	Pointno.		(x) 1.000	0.000	0.000
	0.000	0.000	0.000	0.000	Support		(y) 0.000	1.000	0.000
	0.000	0.000	0.000	0.000	Haunch		(z) 0.000	0.000	1.000
Number	x[m]	y[m]	z[m]	t[m]	h[m]	Title / Support Conditions			
3014	125.500	11.125	0.000	0.000	0.000				
	dx[m]	dy[m]	A[m2]	t[m]		NA	Local directions		
3014	0.000	0.000	0.000	0.000	Pointno.		(x) 1.000	0.000	0.000
	0.000	0.000	0.000	0.000	Support		(y) 0.000	1.000	0.000
	0.000	0.000	0.000	0.000	Haunch		(z) 0.000	0.000	1.000
Number	x[m]	y[m]	z[m]	t[m]	h[m]	Title / Support Conditions			
3107	88.000	0.000	12.000	0.000	0.000				
	dx[m]	dy[m]	A[m2]	t[m]		NA	Local directions		
3107	0.000	0.000	0.000	0.000	Pointno.		(x) 1.000	0.000	0.000
	0.000	0.000	0.000	0.000	Support		(y) 0.000	1.000	0.000
	0.000	0.000	0.000	0.000	Haunch		(z) 0.000	0.000	1.000
Number	x[m]	y[m]	z[m]	t[m]	h[m]	Title / Support Conditions			
3108	88.000	0.000	3.550	0.000	0.000				
	dx[m]	dy[m]	A[m2]	t[m]		NA	Local directions		
3108	0.000	0.000	0.000	0.000	Pointno.		(x) 1.000	0.000	0.000
	0.000	0.000	0.000	0.000	Support		(y) 0.000	1.000	0.000
	0.000	0.000	0.000	0.000	Haunch		(z) 0.000	0.000	1.000
Number	x[m]	y[m]	z[m]	t[m]	h[m]	Title / Support Conditions			
3109	88.000	0.000	3.050	0.000	0.000				
	dx[m]	dy[m]	A[m2]	t[m]		NA	Local directions		
3109	0.000	0.000	0.000	0.000	Pointno.		(x) 1.000	0.000	0.000
	0.000	0.000	0.000	0.000	Support		(y) 0.000	1.000	0.000
	0.000	0.000	0.000	0.000	Haunch		(z) 0.000	0.000	1.000
Number	x[m]	y[m]	z[m]	t[m]	h[m]	Title / Support Conditions			
3110	88.000	0.000	0.000	0.000	0.000				
	dx[m]	dy[m]	A[m2]	t[m]		NA	Local directions		
3110	0.000	0.000	0.000	0.000	Pointno.		(x) 1.000	0.000	0.000
	0.000	0.000	0.000	0.000	Support		(y) 0.000	1.000	0.000
	0.000	0.000	0.000	0.000	Haunch		(z) 0.000	0.000	1.000
Number	x[m]	y[m]	z[m]	t[m]	h[m]	Title / Support Conditions			
3111	88.900	0.000	0.000	0.000	0.000				
	dx[m]	dy[m]	A[m2]	t[m]		NA	Local directions		
3111	0.000	0.000	0.000	0.000	Pointno.		(x) 1.000	0.000	0.000
	0.000	0.000	0.000	0.000	Support		(y) 0.000	1.000	0.000
	0.000	0.000	0.000	0.000	Haunch		(z) 0.000	0.000	1.000
Number	x[m]	y[m]	z[m]	t[m]	h[m]	Title / Support Conditions			
3112	100.500	0.000	0.000	0.000	0.000				
	dx[m]	dy[m]	A[m2]	t[m]		NA	Local directions		
3112	0.000	0.000	0.000	0.000	Pointno.		(x) 1.000	0.000	0.000
	0.000	0.000	0.000	0.000	Support		(y) 0.000	1.000	0.000
	0.000	0.000	0.000	0.000	Haunch		(z) 0.000	0.000	1.000
Number	x[m]	y[m]	z[m]	t[m]	h[m]	Title / Support Conditions			
3113	116.500	0.000	0.000	0.000	0.000				
	dx[m]	dy[m]	A[m2]	t[m]		NA	Local directions		
3113	0.000	0.000	0.000	0.000	Pointno.		(x) 1.000	0.000	0.000
	0.000	0.000	0.000	0.000	Support		(y) 0.000	1.000	0.000
	0.000	0.000	0.000	0.000	Haunch		(z) 0.000	0.000	1.000
Number	x[m]	y[m]	z[m]	t[m]	h[m]	Title / Support Conditions			
3114	125.100	0.000	0.000	0.000	0.000				
	dx[m]	dy[m]	A[m2]	t[m]		NA	Local directions		
3114	0.000	0.000	0.000	0.000	Pointno.		(x) 1.000	0.000	0.000
	0.000	0.000	0.000	0.000	Support		(y) 0.000	1.000	0.000
	0.000	0.000	0.000	0.000	Haunch		(z) 0.000	0.000	1.000
Number	x[m]	y[m]	z[m]	t[m]	h[m]	Title / Support Conditions			
3115	88.700	0.000	0.000	0.300	0.000				
	dx[m]	dy[m]	A[m2]	t[m]		NA	Local directions		
3115	0.000	0.000	0.000	0.300	Pointno.		(x) 1.000	0.000	0.000
	0.000	0.000	0.000	0.300	Support		(y) 0.000	1.000	0.000
	0.000	0.000	0.000	0.300	Haunch		(z) 0.000	0.000	1.000

SOFiSTiK AG - www.sofistik.de

Composite bridge 38+50+38, b=14.25m, 2x2HL1100R HISTAR460 , slab 0.30m C30/37

Number	x[m]	y[m]	z[m]	t[m]	h[m]	Title / Support Conditions			
3116	107.000	0.000	0.000	0.300	0.000				
	dx[m]	dy[m]	A[m2]	t[m]		NA	Local directions		
3116	0.000	0.000	0.000	0.300	Pointno.		(x) 1.000	0.000	0.000
	0.000	0.000	0.000	0.300	Support		(y) 0.000	1.000	0.000
	0.000	0.000	0.000	0.300	Haunch		(z) 0.000	0.000	1.000
Number	x[m]	y[m]	z[m]	t[m]	h[m]	Title / Support Conditions			
3117	125.300	0.000	0.000	0.300	0.000				
	dx[m]	dy[m]	A[m2]	t[m]		NA	Local directions		
3117	0.000	0.000	0.000	0.300	Pointno.		(x) 1.000	0.000	0.000
	0.000	0.000	0.000	0.300	Support		(y) 0.000	1.000	0.000
	0.000	0.000	0.000	0.300	Haunch		(z) 0.000	0.000	1.000
Number	x[m]	y[m]	z[m]	t[m]	h[m]	Title / Support Conditions			
3126	86.500	0.000	32.000	0.000	0.000				
	dx[m]	dy[m]	A[m2]	t[m]		NA	Local directions		
3126	0.000	0.000	0.000	0.000	Pointno.		(x) 1.000	0.000	0.000
	0.000	0.000	0.000	0.000	Support		(y) 0.000	1.000	0.000
	0.000	0.000	0.000	0.000	Haunch		(z) 0.000	0.000	1.000
Number	x[m]	y[m]	z[m]	t[m]	h[m]	Title / Support Conditions			
3127	86.500	0.000	12.000	0.000	0.000				
	dx[m]	dy[m]	A[m2]	t[m]		NA	Local directions		
3127	0.000	0.000	0.000	0.000	Pointno.		(x) 1.000	0.000	0.000
	0.000	0.000	0.000	0.000	Support		(y) 0.000	1.000	0.000
	0.000	0.000	0.000	0.000	Haunch		(z) 0.000	0.000	1.000
Number	x[m]	y[m]	z[m]	t[m]	h[m]	Title / Support Conditions			
3136	89.500	0.000	32.000	0.000	0.000				
	dx[m]	dy[m]	A[m2]	t[m]		NA	Local directions		
3136	0.000	0.000	0.000	0.000	Pointno.		(x) 1.000	0.000	0.000
	0.000	0.000	0.000	0.000	Support		(y) 0.000	1.000	0.000
	0.000	0.000	0.000	0.000	Haunch		(z) 0.000	0.000	1.000
Number	x[m]	y[m]	z[m]	t[m]	h[m]	Title / Support Conditions			
3137	89.500	0.000	12.000	0.000	0.000				
	dx[m]	dy[m]	A[m2]	t[m]		NA	Local directions		
3137	0.000	0.000	0.000	0.000	Pointno.		(x) 1.000	0.000	0.000
	0.000	0.000	0.000	0.000	Support		(y) 0.000	1.000	0.000
	0.000	0.000	0.000	0.000	Haunch		(z) 0.000	0.000	1.000
Number	x[m]	y[m]	z[m]	t[m]	h[m]	Title / Support Conditions			
3207	88.000	8.000	12.000	0.000	0.000				
	dx[m]	dy[m]	A[m2]	t[m]		NA	Local directions		
3207	0.000	0.000	0.000	0.000	Pointno.		(x) 1.000	0.000	0.000
	0.000	0.000	0.000	0.000	Support		(y) 0.000	1.000	0.000
	0.000	0.000	0.000	0.000	Haunch		(z) 0.000	0.000	1.000
Number	x[m]	y[m]	z[m]	t[m]	h[m]	Title / Support Conditions			
3208	88.000	8.000	3.550	0.000	0.000				
	dx[m]	dy[m]	A[m2]	t[m]		NA	Local directions		
3208	0.000	0.000	0.000	0.000	Pointno.		(x) 1.000	0.000	0.000
	0.000	0.000	0.000	0.000	Support		(y) 0.000	1.000	0.000
	0.000	0.000	0.000	0.000	Haunch		(z) 0.000	0.000	1.000
Number	x[m]	y[m]	z[m]	t[m]	h[m]	Title / Support Conditions			
3209	88.000	8.000	3.050	0.000	0.000				
	dx[m]	dy[m]	A[m2]	t[m]		NA	Local directions		
3209	0.000	0.000	0.000	0.000	Pointno.		(x) 1.000	0.000	0.000
	0.000	0.000	0.000	0.000	Support		(y) 0.000	1.000	0.000
	0.000	0.000	0.000	0.000	Haunch		(z) 0.000	0.000	1.000
Number	x[m]	y[m]	z[m]	t[m]	h[m]	Title / Support Conditions			
3210	88.000	8.000	0.000	0.000	0.000				
	dx[m]	dy[m]	A[m2]	t[m]		NA	Local directions		
3210	0.000	0.000	0.000	0.000	Pointno.		(x) 1.000	0.000	0.000
	0.000	0.000	0.000	0.000	Support		(y) 0.000	1.000	0.000
	0.000	0.000	0.000	0.000	Haunch		(z) 0.000	0.000	1.000
Number	x[m]	y[m]	z[m]	t[m]	h[m]	Title / Support Conditions			
3211	88.900	8.000	0.000	0.000	0.000				
	dx[m]	dy[m]	A[m2]	t[m]		NA	Local directions		
3211	0.000	0.000	0.000	0.000	Pointno.		(x) 1.000	0.000	0.000
	0.000	0.000	0.000	0.000	Support		(y) 0.000	1.000	0.000
	0.000	0.000	0.000	0.000	Haunch		(z) 0.000	0.000	1.000

SOFiSTiK AG - www.sofistik.de

Composite bridge 38+50+38, b=14.25m, 2x2HL1100R HISTAR460 , slab 0.30m C30/37

Number	x[m]	y[m]	z[m]	t[m]	h[m]	Title / Support Conditions			
3212	100.500	8.000	0.000	0.000	0.000				
	dx[m]	dy[m]	A[m2]	t[m]		NA	Local directions		
3212	0.000	0.000	0.000	0.000	Pointno.		(x) 1.000	0.000	0.000
	0.000	0.000	0.000	0.000	Support		(y) 0.000	1.000	0.000
	0.000	0.000	0.000	0.000	Haunch		(z) 0.000	0.000	1.000
Number	x[m]	y[m]	z[m]	t[m]	h[m]	Title / Support Conditions			
3213	116.500	8.000	0.000	0.000	0.000				
	dx[m]	dy[m]	A[m2]	t[m]		NA	Local directions		
3213	0.000	0.000	0.000	0.000	Pointno.		(x) 1.000	0.000	0.000
	0.000	0.000	0.000	0.000	Support		(y) 0.000	1.000	0.000
	0.000	0.000	0.000	0.000	Haunch		(z) 0.000	0.000	1.000
Number	x[m]	y[m]	z[m]	t[m]	h[m]	Title / Support Conditions			
3214	125.100	8.000	0.000	0.000	0.000				
	dx[m]	dy[m]	A[m2]	t[m]		NA	Local directions		
3214	0.000	0.000	0.000	0.000	Pointno.		(x) 1.000	0.000	0.000
	0.000	0.000	0.000	0.000	Support		(y) 0.000	1.000	0.000
	0.000	0.000	0.000	0.000	Haunch		(z) 0.000	0.000	1.000
Number	x[m]	y[m]	z[m]	t[m]	h[m]	Title / Support Conditions			
3226	86.500	8.000	32.000	0.000	0.000				
	dx[m]	dy[m]	A[m2]	t[m]		NA	Local directions		
3226	0.000	0.000	0.000	0.000	Pointno.		(x) 1.000	0.000	0.000
	0.000	0.000	0.000	0.000	Support		(y) 0.000	1.000	0.000
	0.000	0.000	0.000	0.000	Haunch		(z) 0.000	0.000	1.000
Number	x[m]	y[m]	z[m]	t[m]	h[m]	Title / Support Conditions			
3227	86.500	8.000	12.000	0.000	0.000				
	dx[m]	dy[m]	A[m2]	t[m]		NA	Local directions		
3227	0.000	0.000	0.000	0.000	Pointno.		(x) 1.000	0.000	0.000
	0.000	0.000	0.000	0.000	Support		(y) 0.000	1.000	0.000
	0.000	0.000	0.000	0.000	Haunch		(z) 0.000	0.000	1.000
Number	x[m]	y[m]	z[m]	t[m]	h[m]	Title / Support Conditions			
3236	89.500	8.000	32.000	0.000	0.000				
	dx[m]	dy[m]	A[m2]	t[m]		NA	Local directions		
3236	0.000	0.000	0.000	0.000	Pointno.		(x) 1.000	0.000	0.000
	0.000	0.000	0.000	0.000	Support		(y) 0.000	1.000	0.000
	0.000	0.000	0.000	0.000	Haunch		(z) 0.000	0.000	1.000
Number	x[m]	y[m]	z[m]	t[m]	h[m]	Title / Support Conditions			
3237	89.500	8.000	12.000	0.000	0.000				
	dx[m]	dy[m]	A[m2]	t[m]		NA	Local directions		
3237	0.000	0.000	0.000	0.000	Pointno.		(x) 1.000	0.000	0.000
	0.000	0.000	0.000	0.000	Support		(y) 0.000	1.000	0.000
	0.000	0.000	0.000	0.000	Haunch		(z) 0.000	0.000	1.000
Number	x[m]	y[m]	z[m]	t[m]	h[m]	Title / Support Conditions			
3807	88.000	-3.125	12.000	0.000	0.000				
	dx[m]	dy[m]	A[m2]	t[m]		NA	Local directions		
3807	0.000	0.000	0.000	0.000	Pointno.		(x) 1.000	0.000	0.000
	0.000	0.000	0.000	0.000	Support		(y) 0.000	1.000	0.000
	0.000	0.000	0.000	0.000	Haunch		(z) 0.000	0.000	1.000
Number	x[m]	y[m]	z[m]	t[m]	h[m]	Title / Support Conditions			
3808	88.000	-3.125	3.550	0.000	0.000				
	dx[m]	dy[m]	A[m2]	t[m]		NA	Local directions		
3808	0.000	0.000	0.000	0.000	Pointno.		(x) 1.000	0.000	0.000
	0.000	0.000	0.000	0.000	Support		(y) 0.000	1.000	0.000
	0.000	0.000	0.000	0.000	Haunch		(z) 0.000	0.000	1.000
Number	x[m]	y[m]	z[m]	t[m]	h[m]	Title / Support Conditions			
3810	88.000	-3.125	0.000	0.000	0.000				
	dx[m]	dy[m]	A[m2]	t[m]		NA	Local directions		
3810	0.000	0.000	0.000	0.000	Pointno.		(x) 1.000	0.000	0.000
	0.000	0.000	0.000	0.000	Support		(y) 0.000	1.000	0.000
	0.000	0.000	0.000	0.000	Haunch		(z) 0.000	0.000	1.000
Number	x[m]	y[m]	z[m]	t[m]	h[m]	Title / Support Conditions			
3811	88.500	-3.125	0.000	0.000	0.000				
	dx[m]	dy[m]	A[m2]	t[m]		NA	Local directions		
3811	0.000	0.000	0.000	0.000	Pointno.		(x) 1.000	0.000	0.000
	0.000	0.000	0.000	0.000	Support		(y) 0.000	1.000	0.000
	0.000	0.000	0.000	0.000	Haunch		(z) 0.000	0.000	1.000

SOFiSTiK AG - www.sofistik.de

Composite bridge 38+50+38, b=14.25m, 2x2HL1100R HISTAR460 , slab 0.30m C30/37

Number	x[m]	y[m]	z[m]	t[m]	h[m]	Title / Support Conditions			
3812	100.500	-3.125	0.000	0.000	0.000				
	dx[m]	dy[m]	A[m2]	t[m]		NA	Local directions		
3812	0.000	0.000	0.000	0.000	Pointno.		(x) 1.000	0.000	0.000
	0.000	0.000	0.000	0.000	Support		(y) 0.000	1.000	0.000
	0.000	0.000	0.000	0.000	Haunch		(z) 0.000	0.000	1.000
Number	x[m]	y[m]	z[m]	t[m]	h[m]	Title / Support Conditions			
3813	116.500	-3.125	0.000	0.000	0.000				
	dx[m]	dy[m]	A[m2]	t[m]		NA	Local directions		
3813	0.000	0.000	0.000	0.000	Pointno.		(x) 1.000	0.000	0.000
	0.000	0.000	0.000	0.000	Support		(y) 0.000	1.000	0.000
	0.000	0.000	0.000	0.000	Haunch		(z) 0.000	0.000	1.000
Number	x[m]	y[m]	z[m]	t[m]	h[m]	Title / Support Conditions			
3814	125.500	-3.125	0.000	0.000	0.000				
	dx[m]	dy[m]	A[m2]	t[m]		NA	Local directions		
3814	0.000	0.000	0.000	0.000	Pointno.		(x) 1.000	0.000	0.000
	0.000	0.000	0.000	0.000	Support		(y) 0.000	1.000	0.000
	0.000	0.000	0.000	0.000	Haunch		(z) 0.000	0.000	1.000
Number	x[m]	y[m]	z[m]	t[m]	h[m]	Title / Support Conditions			
3907	88.000	11.125	12.000	0.000	0.000				
	dx[m]	dy[m]	A[m2]	t[m]		NA	Local directions		
3907	0.000	0.000	0.000	0.000	Pointno.		(x) 1.000	0.000	0.000
	0.000	0.000	0.000	0.000	Support		(y) 0.000	1.000	0.000
	0.000	0.000	0.000	0.000	Haunch		(z) 0.000	0.000	1.000
Number	x[m]	y[m]	z[m]	t[m]	h[m]	Title / Support Conditions			
3908	88.000	11.125	3.550	0.000	0.000				
	dx[m]	dy[m]	A[m2]	t[m]		NA	Local directions		
3908	0.000	0.000	0.000	0.000	Pointno.		(x) 1.000	0.000	0.000
	0.000	0.000	0.000	0.000	Support		(y) 0.000	1.000	0.000
	0.000	0.000	0.000	0.000	Haunch		(z) 0.000	0.000	1.000
Number	x[m]	y[m]	z[m]	t[m]	h[m]	Title / Support Conditions			
3910	88.000	11.125	0.000	0.000	0.000				
	dx[m]	dy[m]	A[m2]	t[m]		NA	Local directions		
3910	0.000	0.000	0.000	0.000	Pointno.		(x) 1.000	0.000	0.000
	0.000	0.000	0.000	0.000	Support		(y) 0.000	1.000	0.000
	0.000	0.000	0.000	0.000	Haunch		(z) 0.000	0.000	1.000
Number	x[m]	y[m]	z[m]	t[m]	h[m]	Title / Support Conditions			
3911	88.500	11.125	0.000	0.000	0.000				
	dx[m]	dy[m]	A[m2]	t[m]		NA	Local directions		
3911	0.000	0.000	0.000	0.000	Pointno.		(x) 1.000	0.000	0.000
	0.000	0.000	0.000	0.000	Support		(y) 0.000	1.000	0.000
	0.000	0.000	0.000	0.000	Haunch		(z) 0.000	0.000	1.000
Number	x[m]	y[m]	z[m]	t[m]	h[m]	Title / Support Conditions			
3912	100.500	11.125	0.000	0.000	0.000				
	dx[m]	dy[m]	A[m2]	t[m]		NA	Local directions		
3912	0.000	0.000	0.000	0.000	Pointno.		(x) 1.000	0.000	0.000
	0.000	0.000	0.000	0.000	Support		(y) 0.000	1.000	0.000
	0.000	0.000	0.000	0.000	Haunch		(z) 0.000	0.000	1.000
Number	x[m]	y[m]	z[m]	t[m]	h[m]	Title / Support Conditions			
3913	116.500	11.125	0.000	0.000	0.000				
	dx[m]	dy[m]	A[m2]	t[m]		NA	Local directions		
3913	0.000	0.000	0.000	0.000	Pointno.		(x) 1.000	0.000	0.000
	0.000	0.000	0.000	0.000	Support		(y) 0.000	1.000	0.000
	0.000	0.000	0.000	0.000	Haunch		(z) 0.000	0.000	1.000
Number	x[m]	y[m]	z[m]	t[m]	h[m]	Title / Support Conditions			
3914	125.500	11.125	0.000	0.000	0.000				
	dx[m]	dy[m]	A[m2]	t[m]		NA	Local directions		
3914	0.000	0.000	0.000	0.000	Pointno.		(x) 1.000	0.000	0.000
	0.000	0.000	0.000	0.000	Support		(y) 0.000	1.000	0.000
	0.000	0.000	0.000	0.000	Haunch		(z) 0.000	0.000	1.000
Number	x[m]	y[m]	z[m]	t[m]	h[m]	Title / Support Conditions			
4010	126.000	11.125	0.000	0.000	0.000				
	dx[m]	dy[m]	A[m2]	t[m]		NA	Local directions		
4010	0.000	0.000	0.000	0.000	Pointno.		(x) 1.000	0.000	0.000
	0.000	0.000	0.000	0.000	Support		(y) 0.000	1.000	0.000
	0.000	0.000	0.000	0.000	Haunch		(z) 0.000	0.000	1.000

SOFiSTiK AG - www.sofistik.de

Composite bridge 38+50+38, b=14.25m, 2x2HL1100R HISTAR460 , slab 0.30m C30/37

Number	x[m]	y[m]	z[m]	t[m]	h[m]	Title / Support Conditions			
4107	126.000	0.000	12.000	0.000	0.000				
	dx[m]	dy[m]	A[m2]	t[m]		NA	Local directions		
4107	0.000	0.000	0.000	0.000	Pointno.		(x) 1.000	0.000	0.000
	0.000	0.000	0.000	0.000	Support		(y) 0.000	1.000	0.000
	0.000	0.000	0.000	0.000	Haunch		(z) 0.000	0.000	1.000
Number	x[m]	y[m]	z[m]	t[m]	h[m]	Title / Support Conditions			
4108	126.000	0.000	3.550	0.000	0.000				
	dx[m]	dy[m]	A[m2]	t[m]		NA	Local directions		
4108	0.000	0.000	0.000	0.000	Pointno.		(x) 1.000	0.000	0.000
	0.000	0.000	0.000	0.000	Support		(y) 0.000	1.000	0.000
	0.000	0.000	0.000	0.000	Haunch		(z) 0.000	0.000	1.000
Number	x[m]	y[m]	z[m]	t[m]	h[m]	Title / Support Conditions			
4109	126.000	0.000	3.050	0.000	0.000				
	dx[m]	dy[m]	A[m2]	t[m]		NA	Local directions		
4109	0.000	0.000	0.000	0.000	Pointno.		(x) 1.000	0.000	0.000
	0.000	0.000	0.000	0.000	Support		(y) 0.000	1.000	0.000
	0.000	0.000	0.000	0.000	Haunch		(z) 0.000	0.000	1.000
Number	x[m]	y[m]	z[m]	t[m]	h[m]	Title / Support Conditions			
4110	126.000	0.000	0.000	0.000	0.000				
	dx[m]	dy[m]	A[m2]	t[m]		NA	Local directions		
4110	0.000	0.000	0.000	0.000	Pointno.		(x) 1.000	0.000	0.000
	0.000	0.000	0.000	0.000	Support		(y) 0.000	1.000	0.000
	0.000	0.000	0.000	0.000	Haunch		(z) 0.000	0.000	1.000
Number	x[m]	y[m]	z[m]	t[m]	h[m]	Title / Support Conditions			
4126	124.500	0.000	32.000	0.000	0.000				
	dx[m]	dy[m]	A[m2]	t[m]		NA	Local directions		
4126	0.000	0.000	0.000	0.000	Pointno.		(x) 1.000	0.000	0.000
	0.000	0.000	0.000	0.000	Support		(y) 0.000	1.000	0.000
	0.000	0.000	0.000	0.000	Haunch		(z) 0.000	0.000	1.000
Number	x[m]	y[m]	z[m]	t[m]	h[m]	Title / Support Conditions			
4127	124.500	0.000	12.000	0.000	0.000				
	dx[m]	dy[m]	A[m2]	t[m]		NA	Local directions		
4127	0.000	0.000	0.000	0.000	Pointno.		(x) 1.000	0.000	0.000
	0.000	0.000	0.000	0.000	Support		(y) 0.000	1.000	0.000
	0.000	0.000	0.000	0.000	Haunch		(z) 0.000	0.000	1.000
Number	x[m]	y[m]	z[m]	t[m]	h[m]	Title / Support Conditions			
4136	127.500	0.000	32.000	0.000	0.000				
	dx[m]	dy[m]	A[m2]	t[m]		NA	Local directions		
4136	0.000	0.000	0.000	0.000	Pointno.		(x) 1.000	0.000	0.000
	0.000	0.000	0.000	0.000	Support		(y) 0.000	1.000	0.000
	0.000	0.000	0.000	0.000	Haunch		(z) 0.000	0.000	1.000
Number	x[m]	y[m]	z[m]	t[m]	h[m]	Title / Support Conditions			
4137	127.500	0.000	12.000	0.000	0.000				
	dx[m]	dy[m]	A[m2]	t[m]		NA	Local directions		
4137	0.000	0.000	0.000	0.000	Pointno.		(x) 1.000	0.000	0.000
	0.000	0.000	0.000	0.000	Support		(y) 0.000	1.000	0.000
	0.000	0.000	0.000	0.000	Haunch		(z) 0.000	0.000	1.000
Number	x[m]	y[m]	z[m]	t[m]	h[m]	Title / Support Conditions			
4207	126.000	8.000	12.000	0.000	0.000				
	dx[m]	dy[m]	A[m2]	t[m]		NA	Local directions		
4207	0.000	0.000	0.000	0.000	Pointno.		(x) 1.000	0.000	0.000
	0.000	0.000	0.000	0.000	Support		(y) 0.000	1.000	0.000
	0.000	0.000	0.000	0.000	Haunch		(z) 0.000	0.000	1.000
Number	x[m]	y[m]	z[m]	t[m]	h[m]	Title / Support Conditions			
4208	126.000	8.000	3.550	0.000	0.000				
	dx[m]	dy[m]	A[m2]	t[m]		NA	Local directions		
4208	0.000	0.000	0.000	0.000	Pointno.		(x) 1.000	0.000	0.000
	0.000	0.000	0.000	0.000	Support		(y) 0.000	1.000	0.000
	0.000	0.000	0.000	0.000	Haunch		(z) 0.000	0.000	1.000
Number	x[m]	y[m]	z[m]	t[m]	h[m]	Title / Support Conditions			
4209	126.000	8.000	3.050	0.000	0.000				
	dx[m]	dy[m]	A[m2]	t[m]		NA	Local directions		
4209	0.000	0.000	0.000	0.000	Pointno.		(x) 1.000	0.000	0.000
	0.000	0.000	0.000	0.000	Support		(y) 0.000	1.000	0.000
	0.000	0.000	0.000	0.000	Haunch		(z) 0.000	0.000	1.000

SOFiSTiK AG - www.sofistik.de

Composite bridge 38+50+38, b=14.25m, 2x2HL1100R HISTAR460 , slab 0.30m C30/37

Number	x[m]	y[m]	z[m]	t[m]	h[m]	Title / Support Conditions			
4210	126.000	8.000	0.000	0.000	0.000				
	dx[m]	dy[m]	A[m2]	t[m]		NA	Local directions		
4210	0.000	0.000	0.000	0.000	Pointno.		(x) 1.000	0.000	0.000
	0.000	0.000	0.000	0.000	Support		(y) 0.000	1.000	0.000
	0.000	0.000	0.000	0.000	Haunch		(z) 0.000	0.000	1.000
Number	x[m]	y[m]	z[m]	t[m]	h[m]	Title / Support Conditions			
4226	124.500	8.000	32.000	0.000	0.000				
	dx[m]	dy[m]	A[m2]	t[m]		NA	Local directions		
4226	0.000	0.000	0.000	0.000	Pointno.		(x) 1.000	0.000	0.000
	0.000	0.000	0.000	0.000	Support		(y) 0.000	1.000	0.000
	0.000	0.000	0.000	0.000	Haunch		(z) 0.000	0.000	1.000
Number	x[m]	y[m]	z[m]	t[m]	h[m]	Title / Support Conditions			
4227	124.500	8.000	12.000	0.000	0.000				
	dx[m]	dy[m]	A[m2]	t[m]		NA	Local directions		
4227	0.000	0.000	0.000	0.000	Pointno.		(x) 1.000	0.000	0.000
	0.000	0.000	0.000	0.000	Support		(y) 0.000	1.000	0.000
	0.000	0.000	0.000	0.000	Haunch		(z) 0.000	0.000	1.000
Number	x[m]	y[m]	z[m]	t[m]	h[m]	Title / Support Conditions			
4236	127.500	8.000	32.000	0.000	0.000				
	dx[m]	dy[m]	A[m2]	t[m]		NA	Local directions		
4236	0.000	0.000	0.000	0.000	Pointno.		(x) 1.000	0.000	0.000
	0.000	0.000	0.000	0.000	Support		(y) 0.000	1.000	0.000
	0.000	0.000	0.000	0.000	Haunch		(z) 0.000	0.000	1.000
Number	x[m]	y[m]	z[m]	t[m]	h[m]	Title / Support Conditions			
4237	127.500	8.000	12.000	0.000	0.000				
	dx[m]	dy[m]	A[m2]	t[m]		NA	Local directions		
4237	0.000	0.000	0.000	0.000	Pointno.		(x) 1.000	0.000	0.000
	0.000	0.000	0.000	0.000	Support		(y) 0.000	1.000	0.000
	0.000	0.000	0.000	0.000	Haunch		(z) 0.000	0.000	1.000
Number	x[m]	y[m]	z[m]	t[m]	h[m]	Title / Support Conditions			
4803	127.000	-3.125	3.550	0.000	0.000				
	dx[m]	dy[m]	A[m2]	t[m]		NA	Local directions		
4803	0.000	0.000	0.000	0.000	Pointno.		(x) 1.000	0.000	0.000
	0.000	0.000	0.000	0.000	Support		(y) 0.000	1.000	0.000
	0.000	0.000	0.000	0.000	Haunch		(z) 0.000	0.000	1.000
Number	x[m]	y[m]	z[m]	t[m]	h[m]	Title / Support Conditions			
4804	127.000	-3.125	-0.350	0.000	0.000				
	dx[m]	dy[m]	A[m2]	t[m]		NA	Local directions		
4804	0.000	0.000	0.000	0.000	Pointno.		(x) 1.000	0.000	0.000
	0.000	0.000	0.000	0.000	Support		(y) 0.000	1.000	0.000
	0.000	0.000	0.000	0.000	Haunch		(z) 0.000	0.000	1.000
Number	x[m]	y[m]	z[m]	t[m]	h[m]	Title / Support Conditions			
4807	126.000	-3.125	12.000	0.000	0.000				
	dx[m]	dy[m]	A[m2]	t[m]		NA	Local directions		
4807	0.000	0.000	0.000	0.000	Pointno.		(x) 1.000	0.000	0.000
	0.000	0.000	0.000	0.000	Support		(y) 0.000	1.000	0.000
	0.000	0.000	0.000	0.000	Haunch		(z) 0.000	0.000	1.000
Number	x[m]	y[m]	z[m]	t[m]	h[m]	Title / Support Conditions			
4808	126.000	-3.125	3.550	0.000	0.000				
	dx[m]	dy[m]	A[m2]	t[m]		NA	Local directions		
4808	0.000	0.000	0.000	0.000	Pointno.		(x) 1.000	0.000	0.000
	0.000	0.000	0.000	0.000	Support		(y) 0.000	1.000	0.000
	0.000	0.000	0.000	0.000	Haunch		(z) 0.000	0.000	1.000
Number	x[m]	y[m]	z[m]	t[m]	h[m]	Title / Support Conditions			
4810	126.000	-3.125	0.000	0.000	0.000				
	dx[m]	dy[m]	A[m2]	t[m]		NA	Local directions		
4810	0.000	0.000	0.000	0.000	Pointno.		(x) 1.000	0.000	0.000
	0.000	0.000	0.000	0.000	Support		(y) 0.000	1.000	0.000
	0.000	0.000	0.000	0.000	Haunch		(z) 0.000	0.000	1.000
Number	x[m]	y[m]	z[m]	t[m]	h[m]	Title / Support Conditions			
4903	127.000	11.125	3.550	0.000	0.000				
	dx[m]	dy[m]	A[m2]	t[m]		NA	Local directions		
4903	0.000	0.000	0.000	0.000	Pointno.		(x) 1.000	0.000	0.000
	0.000	0.000	0.000	0.000	Support		(y) 0.000	1.000	0.000
	0.000	0.000	0.000	0.000	Haunch		(z) 0.000	0.000	1.000

SOFiSTiK AG - www.sofistik.de

Composite bridge 38+50+38, b=14.25m, 2x2HL1100R HISTAR460 , slab 0.30m C30/37

Number	x[m]	y[m]	z[m]	t[m]	h[m]	Title / Support Conditions			
4904	127.000	11.125	-0.350	0.000	0.000				
	dx[m]	dy[m]	A[m2]	t[m]		NA	Local directions		
4904	0.000	0.000	0.000	0.000	Pointno.		(x) 1.000	0.000	0.000
	0.000	0.000	0.000	0.000	Support		(y) 0.000	1.000	0.000
	0.000	0.000	0.000	0.000	Haunch		(z) 0.000	0.000	1.000
Number	x[m]	y[m]	z[m]	t[m]	h[m]	Title / Support Conditions			
4907	126.000	11.125	12.000	0.000	0.000				
	dx[m]	dy[m]	A[m2]	t[m]		NA	Local directions		
4907	0.000	0.000	0.000	0.000	Pointno.		(x) 1.000	0.000	0.000
	0.000	0.000	0.000	0.000	Support		(y) 0.000	1.000	0.000
	0.000	0.000	0.000	0.000	Haunch		(z) 0.000	0.000	1.000
Number	x[m]	y[m]	z[m]	t[m]	h[m]	Title / Support Conditions			
4908	126.000	11.125	3.550	0.000	0.000				
	dx[m]	dy[m]	A[m2]	t[m]		NA	Local directions		
4908	0.000	0.000	0.000	0.000	Pointno.		(x) 1.000	0.000	0.000
	0.000	0.000	0.000	0.000	Support		(y) 0.000	1.000	0.000
	0.000	0.000	0.000	0.000	Haunch		(z) 0.000	0.000	1.000
Number	x[m]	y[m]	z[m]	t[m]	h[m]	Title / Support Conditions			
4910	126.000	11.125	0.000	0.000	0.000				
	dx[m]	dy[m]	A[m2]	t[m]		NA	Local directions		
4910	0.000	0.000	0.000	0.000	Pointno.		(x) 1.000	0.000	0.000
	0.000	0.000	0.000	0.000	Support		(y) 0.000	1.000	0.000
	0.000	0.000	0.000	0.000	Haunch		(z) 0.000	0.000	1.000
Number	x[m]	y[m]	z[m]	t[m]	h[m]	Title / Support Conditions			
11111	0.900	0.000	1.200	0.000	0.000				
	dx[m]	dy[m]	A[m2]	t[m]		NA	Local directions		
11111	0.000	0.000	0.000	0.000	Pointno.		(x) 1.000	0.000	0.000
	0.000	0.000	0.000	0.000	Support		(y) 0.000	1.000	0.000
	0.000	0.000	0.000	0.000	Haunch		(z) 0.000	0.000	1.000
Number	x[m]	y[m]	z[m]	t[m]	h[m]	Title / Support Conditions			
11114	37.100	0.000	1.200	0.000	0.000				
	dx[m]	dy[m]	A[m2]	t[m]		NA	Local directions		
11114	0.000	0.000	0.000	0.000	Pointno.		(x) 1.000	0.000	0.000
	0.000	0.000	0.000	0.000	Support		(y) 0.000	1.000	0.000
	0.000	0.000	0.000	0.000	Haunch		(z) 0.000	0.000	1.000
Number	x[m]	y[m]	z[m]	t[m]	h[m]	Title / Support Conditions			
11211	0.900	8.000	1.200	0.000	0.000				
	dx[m]	dy[m]	A[m2]	t[m]		NA	Local directions		
11211	0.000	0.000	0.000	0.000	Pointno.		(x) 1.000	0.000	0.000
	0.000	0.000	0.000	0.000	Support		(y) 0.000	1.000	0.000
	0.000	0.000	0.000	0.000	Haunch		(z) 0.000	0.000	1.000
Number	x[m]	y[m]	z[m]	t[m]	h[m]	Title / Support Conditions			
11214	37.100	8.000	1.200	0.000	0.000				
	dx[m]	dy[m]	A[m2]	t[m]		NA	Local directions		
11214	0.000	0.000	0.000	0.000	Pointno.		(x) 1.000	0.000	0.000
	0.000	0.000	0.000	0.000	Support		(y) 0.000	1.000	0.000
	0.000	0.000	0.000	0.000	Haunch		(z) 0.000	0.000	1.000
Number	x[m]	y[m]	z[m]	t[m]	h[m]	Title / Support Conditions			
21012	5.700	8.000	0.000	0.000	0.000				
	dx[m]	dy[m]	A[m2]	t[m]		NA	Local directions		
21012	0.000	0.000	0.000	0.000	Pointno.		(x) 1.000	0.000	0.000
	0.000	0.000	0.000	0.000	Support		(y) 0.000	1.000	0.000
	0.000	0.000	0.000	0.000	Haunch		(z) 0.000	0.000	1.000
Number	x[m]	y[m]	z[m]	t[m]	h[m]	Title / Support Conditions			
21013	30.500	8.000	0.000	0.000	0.000				
	dx[m]	dy[m]	A[m2]	t[m]		NA	Local directions		
21013	0.000	0.000	0.000	0.000	Pointno.		(x) 1.000	0.000	0.000
	0.000	0.000	0.000	0.000	Support		(y) 0.000	1.000	0.000
	0.000	0.000	0.000	0.000	Haunch		(z) 0.000	0.000	1.000
Number	x[m]	y[m]	z[m]	t[m]	h[m]	Title / Support Conditions			
21112	5.700	0.000	0.000	0.000	0.000				
	dx[m]	dy[m]	A[m2]	t[m]		NA	Local directions		
21112	0.000	0.000	0.000	0.000	Pointno.		(x) 1.000	0.000	0.000
	0.000	0.000	0.000	0.000	Support		(y) 0.000	1.000	0.000
	0.000	0.000	0.000	0.000	Haunch		(z) 0.000	0.000	1.000

SOFiSTiK AG - www.sofistik.de

Composite bridge 38+50+38, b=14.25m, 2x2HL1100R HISTAR460 , slab 0.30m C30/37

Number	x[m]	y[m]	z[m]	t[m]	h[m]	Title / Support Conditions			
21113	30.500	0.000	0.000	0.000	0.000				
	dx[m]	dy[m]	A[m2]	t[m]		NA	Local directions		
21113	0.000	0.000	0.000	0.000	Pointno.		(x) 1.000	0.000	0.000
	0.000	0.000	0.000	0.000	Support		(y) 0.000	1.000	0.000
	0.000	0.000	0.000	0.000	Haunch		(z) 0.000	0.000	1.000
Number	x[m]	y[m]	z[m]	t[m]	h[m]	Title / Support Conditions			
21212	5.700	8.000	0.000	0.000	0.000				
	dx[m]	dy[m]	A[m2]	t[m]		NA	Local directions		
21212	0.000	0.000	0.000	0.000	Pointno.		(x) 1.000	0.000	0.000
	0.000	0.000	0.000	0.000	Support		(y) 0.000	1.000	0.000
	0.000	0.000	0.000	0.000	Haunch		(z) 0.000	0.000	1.000
Number	x[m]	y[m]	z[m]	t[m]	h[m]	Title / Support Conditions			
21213	30.500	8.000	0.000	0.000	0.000				
	dx[m]	dy[m]	A[m2]	t[m]		NA	Local directions		
21213	0.000	0.000	0.000	0.000	Pointno.		(x) 1.000	0.000	0.000
	0.000	0.000	0.000	0.000	Support		(y) 0.000	1.000	0.000
	0.000	0.000	0.000	0.000	Haunch		(z) 0.000	0.000	1.000
Number	x[m]	y[m]	z[m]	t[m]	h[m]	Title / Support Conditions			
22012	45.500	8.000	0.000	0.000	0.000				
	dx[m]	dy[m]	A[m2]	t[m]		NA	Local directions		
22012	0.000	0.000	0.000	0.000	Pointno.		(x) 1.000	0.000	0.000
	0.000	0.000	0.000	0.000	Support		(y) 0.000	1.000	0.000
	0.000	0.000	0.000	0.000	Haunch		(z) 0.000	0.000	1.000
Number	x[m]	y[m]	z[m]	t[m]	h[m]	Title / Support Conditions			
22013	80.500	8.000	0.000	0.000	0.000				
	dx[m]	dy[m]	A[m2]	t[m]		NA	Local directions		
22013	0.000	0.000	0.000	0.000	Pointno.		(x) 1.000	0.000	0.000
	0.000	0.000	0.000	0.000	Support		(y) 0.000	1.000	0.000
	0.000	0.000	0.000	0.000	Haunch		(z) 0.000	0.000	1.000
Number	x[m]	y[m]	z[m]	t[m]	h[m]	Title / Support Conditions			
22111	38.900	0.000	1.200	0.000	0.000				
	dx[m]	dy[m]	A[m2]	t[m]		NA	Local directions		
22111	0.000	0.000	0.000	0.000	Pointno.		(x) 1.000	0.000	0.000
	0.000	0.000	0.000	0.000	Support		(y) 0.000	1.000	0.000
	0.000	0.000	0.000	0.000	Haunch		(z) 0.000	0.000	1.000
Number	x[m]	y[m]	z[m]	t[m]	h[m]	Title / Support Conditions			
22112	45.500	0.000	0.000	0.000	0.000				
	dx[m]	dy[m]	A[m2]	t[m]		NA	Local directions		
22112	0.000	0.000	0.000	0.000	Pointno.		(x) 1.000	0.000	0.000
	0.000	0.000	0.000	0.000	Support		(y) 0.000	1.000	0.000
	0.000	0.000	0.000	0.000	Haunch		(z) 0.000	0.000	1.000
Number	x[m]	y[m]	z[m]	t[m]	h[m]	Title / Support Conditions			
22113	80.500	0.000	0.000	0.000	0.000				
	dx[m]	dy[m]	A[m2]	t[m]		NA	Local directions		
22113	0.000	0.000	0.000	0.000	Pointno.		(x) 1.000	0.000	0.000
	0.000	0.000	0.000	0.000	Support		(y) 0.000	1.000	0.000
	0.000	0.000	0.000	0.000	Haunch		(z) 0.000	0.000	1.000
Number	x[m]	y[m]	z[m]	t[m]	h[m]	Title / Support Conditions			
22114	87.100	0.000	1.200	0.000	0.000				
	dx[m]	dy[m]	A[m2]	t[m]		NA	Local directions		
22114	0.000	0.000	0.000	0.000	Pointno.		(x) 1.000	0.000	0.000
	0.000	0.000	0.000	0.000	Support		(y) 0.000	1.000	0.000
	0.000	0.000	0.000	0.000	Haunch		(z) 0.000	0.000	1.000
Number	x[m]	y[m]	z[m]	t[m]	h[m]	Title / Support Conditions			
22211	38.900	8.000	1.200	0.000	0.000				
	dx[m]	dy[m]	A[m2]	t[m]		NA	Local directions		
22211	0.000	0.000	0.000	0.000	Pointno.		(x) 1.000	0.000	0.000
	0.000	0.000	0.000	0.000	Support		(y) 0.000	1.000	0.000
	0.000	0.000	0.000	0.000	Haunch		(z) 0.000	0.000	1.000
Number	x[m]	y[m]	z[m]	t[m]	h[m]	Title / Support Conditions			
22212	45.500	8.000	0.000	0.000	0.000				
	dx[m]	dy[m]	A[m2]	t[m]		NA	Local directions		
22212	0.000	0.000	0.000	0.000	Pointno.		(x) 1.000	0.000	0.000
	0.000	0.000	0.000	0.000	Support		(y) 0.000	1.000	0.000
	0.000	0.000	0.000	0.000	Haunch		(z) 0.000	0.000	1.000

SOFiSTiK AG - www.sofistik.de

Composite bridge 38+50+38, b=14.25m, 2x2HL1100R HISTAR460 , slab 0.30m C30/37

Number	x[m]	y[m]	z[m]	t[m]	h[m]	Title / Support Conditions			
22213	80.500	8.000	0.000	0.000	0.000				
	dx[m]	dy[m]	A[m2]	t[m]		NA	Local directions		
22213	0.000	0.000	0.000	0.000	Pointno.		(x) 1.000	0.000	0.000
	0.000	0.000	0.000	0.000	Support		(y) 0.000	1.000	0.000
	0.000	0.000	0.000	0.000	Haunch		(z) 0.000	0.000	1.000
Number	x[m]	y[m]	z[m]	t[m]	h[m]	Title / Support Conditions			
22214	87.100	8.000	1.200	0.000	0.000				
	dx[m]	dy[m]	A[m2]	t[m]		NA	Local directions		
22214	0.000	0.000	0.000	0.000	Pointno.		(x) 1.000	0.000	0.000
	0.000	0.000	0.000	0.000	Support		(y) 0.000	1.000	0.000
	0.000	0.000	0.000	0.000	Haunch		(z) 0.000	0.000	1.000
Number	x[m]	y[m]	z[m]	t[m]	h[m]	Title / Support Conditions			
23012	95.500	8.000	0.000	0.000	0.000				
	dx[m]	dy[m]	A[m2]	t[m]		NA	Local directions		
23012	0.000	0.000	0.000	0.000	Pointno.		(x) 1.000	0.000	0.000
	0.000	0.000	0.000	0.000	Support		(y) 0.000	1.000	0.000
	0.000	0.000	0.000	0.000	Haunch		(z) 0.000	0.000	1.000
Number	x[m]	y[m]	z[m]	t[m]	h[m]	Title / Support Conditions			
23013	120.300	8.000	0.000	0.000	0.000				
	dx[m]	dy[m]	A[m2]	t[m]		NA	Local directions		
23013	0.000	0.000	0.000	0.000	Pointno.		(x) 1.000	0.000	0.000
	0.000	0.000	0.000	0.000	Support		(y) 0.000	1.000	0.000
	0.000	0.000	0.000	0.000	Haunch		(z) 0.000	0.000	1.000
Number	x[m]	y[m]	z[m]	t[m]	h[m]	Title / Support Conditions			
23112	95.500	0.000	0.000	0.000	0.000				
	dx[m]	dy[m]	A[m2]	t[m]		NA	Local directions		
23112	0.000	0.000	0.000	0.000	Pointno.		(x) 1.000	0.000	0.000
	0.000	0.000	0.000	0.000	Support		(y) 0.000	1.000	0.000
	0.000	0.000	0.000	0.000	Haunch		(z) 0.000	0.000	1.000
Number	x[m]	y[m]	z[m]	t[m]	h[m]	Title / Support Conditions			
23113	120.300	0.000	0.000	0.000	0.000				
	dx[m]	dy[m]	A[m2]	t[m]		NA	Local directions		
23113	0.000	0.000	0.000	0.000	Pointno.		(x) 1.000	0.000	0.000
	0.000	0.000	0.000	0.000	Support		(y) 0.000	1.000	0.000
	0.000	0.000	0.000	0.000	Haunch		(z) 0.000	0.000	1.000
Number	x[m]	y[m]	z[m]	t[m]	h[m]	Title / Support Conditions			
23212	95.500	8.000	0.000	0.000	0.000				
	dx[m]	dy[m]	A[m2]	t[m]		NA	Local directions		
23212	0.000	0.000	0.000	0.000	Pointno.		(x) 1.000	0.000	0.000
	0.000	0.000	0.000	0.000	Support		(y) 0.000	1.000	0.000
	0.000	0.000	0.000	0.000	Haunch		(z) 0.000	0.000	1.000
Number	x[m]	y[m]	z[m]	t[m]	h[m]	Title / Support Conditions			
23213	120.300	8.000	0.000	0.000	0.000				
	dx[m]	dy[m]	A[m2]	t[m]		NA	Local directions		
23213	0.000	0.000	0.000	0.000	Pointno.		(x) 1.000	0.000	0.000
	0.000	0.000	0.000	0.000	Support		(y) 0.000	1.000	0.000
	0.000	0.000	0.000	0.000	Haunch		(z) 0.000	0.000	1.000
Number	x[m]	y[m]	z[m]	t[m]	h[m]	Title / Support Conditions			
33111	88.900	0.000	1.200	0.000	0.000				
	dx[m]	dy[m]	A[m2]	t[m]		NA	Local directions		
33111	0.000	0.000	0.000	0.000	Pointno.		(x) 1.000	0.000	0.000
	0.000	0.000	0.000	0.000	Support		(y) 0.000	1.000	0.000
	0.000	0.000	0.000	0.000	Haunch		(z) 0.000	0.000	1.000
Number	x[m]	y[m]	z[m]	t[m]	h[m]	Title / Support Conditions			
33114	125.100	0.000	1.200	0.000	0.000				
	dx[m]	dy[m]	A[m2]	t[m]		NA	Local directions		
33114	0.000	0.000	0.000	0.000	Pointno.		(x) 1.000	0.000	0.000
	0.000	0.000	0.000	0.000	Support		(y) 0.000	1.000	0.000
	0.000	0.000	0.000	0.000	Haunch		(z) 0.000	0.000	1.000
Number	x[m]	y[m]	z[m]	t[m]	h[m]	Title / Support Conditions			
33211	88.900	8.000	1.200	0.000	0.000				
	dx[m]	dy[m]	A[m2]	t[m]		NA	Local directions		
33211	0.000	0.000	0.000	0.000	Pointno.		(x) 1.000	0.000	0.000
	0.000	0.000	0.000	0.000	Support		(y) 0.000	1.000	0.000
	0.000	0.000	0.000	0.000	Haunch		(z) 0.000	0.000	1.000

SOFiSTiK AG - www.sofistik.de

Composite bridge 38+50+38, b=14.25m, 2x2HL1100R HISTAR460 , slab 0.30m C30/37

Number	x[m]	y[m]	z[m]	t[m]	h[m]	Title / Support Conditions
33214	125.100	8.000	1.200	0.000	0.000	

	dx[m]	dy[m]	A[m2]	t[m]	NA	Local directions			
33214	0.000	0.000	0.000	0.000	Pointno.	(x)	1.000	0.000	0.000
	0.000	0.000	0.000	0.000	Support	(y)	0.000	1.000	0.000
	0.000	0.000	0.000	0.000	Haunch	(z)	0.000	0.000	1.000

Structural Lines

Number	Ref	gpt-a	gpt-b	Grp	Mat	b[m]	div	Title / Support Conditions
1001	1	1110	1115	61				
s[-]		x[m]	y[m]	z[m]		L[m]		
dT=		0.000	0.000	0.000				
Number	Ref	gpt-a	gpt-b	Grp	Mat	b[m]	div	Title / Support Conditions
1002	1	1115	1111	61				
s[-]		x[m]	y[m]	z[m]		L[m]		
dT=		0.000	0.000	0.000				
Number	Ref	gpt-a	gpt-b	Grp	Mat	b[m]	div	Title / Support Conditions
1003	1	1112	1116	51				
s[-]		x[m]	y[m]	z[m]		L[m]		
dT=		0.000	0.000	0.000				
Number	Ref	gpt-a	gpt-b	Grp	Mat	b[m]	div	Title / Support Conditions
1004	1	1116	1113	51				
s[-]		x[m]	y[m]	z[m]		L[m]		
dT=		0.000	0.000	0.000				
Number	Ref	gpt-a	gpt-b	Grp	Mat	b[m]	div	Title / Support Conditions
1005	1	1114	1117	62				
s[-]		x[m]	y[m]	z[m]		L[m]		
dT=		0.000	0.000	0.000				
Number	Ref	gpt-a	gpt-b	Grp	Mat	b[m]	div	Title / Support Conditions
1006	1	1117	2110	62				
s[-]		x[m]	y[m]	z[m]		L[m]		
dT=		0.000	0.000	0.000				
Number	Ref	gpt-a	gpt-b	Grp	Mat	b[m]	div	Title / Support Conditions
1007	1	2110	2115	62				
s[-]		x[m]	y[m]	z[m]		L[m]		
dT=		0.000	0.000	0.000				
dT=		0.000	0.000	1.000				
0.000		-1.000	-3.125	3.550		14.250		
DS		0.000	1.000	0.000				
14.250		-1.000	11.125	3.550				
DS		0.000	1.000	0.000				
Number	Ref	gpt-a	gpt-b	Grp	Mat	b[m]	div	Title / Support Conditions
1009	1	2115	2111	62				
s[-]		x[m]	y[m]	z[m]		L[m]		
dT=		0.000	0.000	0.000				
dT=		0.000	0.000	1.000				
0.000		-1.000	-3.125	-0.350		14.250		
DS		0.000	1.000	0.000				
14.250		-1.000	11.125	-0.350				
DS		0.000	1.000	0.000				
Number	Ref	gpt-a	gpt-b	Grp	Mat	b[m]	div	Title / Support Conditions
1011	1	2112	2116	52				
s[-]		x[m]	y[m]	z[m]		L[m]		
dT=		0.000	0.000	0.000				
Number	Ref	gpt-a	gpt-b	Grp	Mat	b[m]	div	Title / Support Conditions
1012	1	2116	2113	52				
s[-]		x[m]	y[m]	z[m]		L[m]		
dT=		0.000	0.000	0.000				
Number	Ref	gpt-a	gpt-b	Grp	Mat	b[m]	div	Title / Support Conditions
1013	1	2114	2117	63				
s[-]		x[m]	y[m]	z[m]		L[m]		
dT=		0.000	0.000	0.000				
Number	Ref	gpt-a	gpt-b	Grp	Mat	b[m]	div	Title / Support Conditions
1014	1	2117	3110	63				
s[-]		x[m]	y[m]	z[m]		L[m]		
dT=		0.000	0.000	0.000				

SOFiSTiK AG - www.sofistik.de

Composite bridge 38+50+38, b=14.25m, 2x2HL1100R HISTAR460 , slab 0.30m C30/37

```
Number Ref   gpt-a    gpt-b  Grp Mat     b[m] div Title /  Support Conditions
  1015 1      3110     3115   63
     s[-]     x[m]     y[m]     z[m]     L[m]
     dT=     0.000    0.000    0.000
Number Ref   gpt-a    gpt-b  Grp Mat     b[m] div Title /  Support Conditions
  1016 1      3115     3111   63
     s[-]     x[m]     y[m]     z[m]     L[m]
     dT=     0.000    0.000    0.000
Number Ref   gpt-a    gpt-b  Grp Mat     b[m] div Title /  Support Conditions
  1017 1      3112     3116   53
     s[-]     x[m]     y[m]     z[m]     L[m]
     dT=     0.000    0.000    0.000
Number Ref   gpt-a    gpt-b  Grp Mat     b[m] div Title /  Support Conditions
  1018 1      3116     3113   53
     s[-]     x[m]     y[m]     z[m]     L[m]
     dT=     0.000    0.000    0.000
Number Ref   gpt-a    gpt-b  Grp Mat     b[m] div Title /  Support Conditions
  1019 1      3114     3117   64
     s[-]     x[m]     y[m]     z[m]     L[m]
     dT=     0.000    0.000    0.000
Number Ref   gpt-a    gpt-b  Grp Mat     b[m] div Title /  Support Conditions
  1020 1      3117     4110   64
     s[-]     x[m]     y[m]     z[m]     L[m]
     dT=     0.000    0.000    0.000
Number Ref   gpt-a    gpt-b  Grp Mat     b[m] div Title /  Support Conditions
  1100        1110     1210   41
     s[-]     x[m]     y[m]     z[m]     L[m]
     dT=     0.000    0.000    1.000
   0.000     0.000    0.000    0.000    8.000
      DS     0.000    1.000    0.000
   8.000     0.000    8.000    0.000
      DS     0.000    1.000    0.000
Number Ref   gpt-a    gpt-b  Grp Mat     b[m] div Title /  Support Conditions
  1107        1107     1207   21
     s[-]     x[m]     y[m]     z[m]     L[m]
     dT=     0.000    0.000    1.000
   0.000     0.000    0.000   12.000    8.000
      DS     0.000    1.000    0.000
   8.000     0.000    8.000   12.000
      DS     0.000    1.000    0.000
     dT=     0.000    0.000    1.000
   0.000     0.000    0.000    3.550    8.000
      DS     0.000    1.000    0.000
   8.000     0.000    8.000    3.550
      DS     0.000    1.000    0.000
Number Ref   gpt-a    gpt-b  Grp Mat     b[m] div Title /  Support Conditions
  1111 1      1111    21112  151
     s[-]     x[m]     y[m]     z[m]     L[m]
     dT=     0.000    0.000    0.000
Number Ref   gpt-a    gpt-b  Grp Mat     b[m] div Title /  Support Conditions
  1113 1      1113    21113   51
     s[-]     x[m]     y[m]     z[m]     L[m]
     dT=     0.000    0.000    0.000
Number Ref   gpt-a    gpt-b  Grp Mat     b[m] div Title /  Support Conditions
  1125        1127     1126   11
     s[-]     x[m]     y[m]     z[m]     L[m]
     dT=     0.000    0.000    1.000
   0.000    -1.500    0.000   12.000   20.000
      DS     0.000    0.000    1.000
  20.000    -1.500    0.000   32.000
      DS     0.000    0.000    1.000
Number Ref   gpt-a    gpt-b  Grp Mat     b[m] div Title /  Support Conditions
  1135        1137     1136   11
     s[-]     x[m]     y[m]     z[m]     L[m]
     dT=     0.000    0.000    1.000
   0.000     1.500    0.000   12.000   20.000
      DS     0.000    0.000    1.000
```

SOFiSTiK AG - www.sofistik.de

Composite bridge 38+50+38, b=14.25m, 2x2HL1100R HISTAR460 , slab 0.30m C30/37

```
     s[-]     x[m]     y[m]     z[m]     L[m]
   20.000    1.500    0.000   32.000
       DS    0.000    0.000    1.000
Number Ref   gpt-a    gpt-b  Grp Mat     b[m] div Title /  Support Conditions
  1210 2      1210     1211   61
     s[-]     x[m]     y[m]     z[m]     L[m]
     dT=     0.000    0.000    0.000
Number Ref   gpt-a    gpt-b  Grp Mat     b[m] div Title /  Support Conditions
  1211 2      1211    21212  151
     s[-]     x[m]     y[m]     z[m]     L[m]
     dT=     0.000    0.000    0.000
Number Ref   gpt-a    gpt-b  Grp Mat     b[m] div Title /  Support Conditions
  1212 2      1212     1213   51
     s[-]     x[m]     y[m]     z[m]     L[m]
     dT=     0.000    0.000    0.000
Number Ref   gpt-a    gpt-b  Grp Mat     b[m] div Title /  Support Conditions
  1213 2      1213    21213   51
     s[-]     x[m]     y[m]     z[m]     L[m]
     dT=     0.000    0.000    0.000
Number Ref   gpt-a    gpt-b  Grp Mat     b[m] div Title /  Support Conditions
  1214 2      1214     2210   62
     s[-]     x[m]     y[m]     z[m]     L[m]
     dT=     0.000    0.000    0.000
Number Ref   gpt-a    gpt-b  Grp Mat     b[m] div Title /  Support Conditions
  1225        1227     1226   11
     s[-]     x[m]     y[m]     z[m]     L[m]
     dT=     0.000    0.000    1.000
    0.000   -1.500    8.000   12.000   20.000
       DS    0.000    0.000    1.000
   20.000   -1.500    8.000   32.000
       DS    0.000    0.000    1.000
Number Ref   gpt-a    gpt-b  Grp Mat     b[m] div Title /  Support Conditions
  1235        1237     1236   11
     s[-]     x[m]     y[m]     z[m]     L[m]
     dT=     0.000    0.000    1.000
    0.000    1.500    8.000   12.000   20.000
       DS    0.000    0.000    1.000
   20.000    1.500    8.000   32.000
       DS    0.000    0.000    1.000
Number Ref   gpt-a    gpt-b  Grp Mat     b[m] div Title /  Support Conditions
  1800        1810     1110   50
     s[-]     x[m]     y[m]     z[m]     L[m]
     dT=     0.000    0.000    1.000
    0.000    0.000   -3.125    0.000    3.125
       DS    0.000    1.000    0.000
    3.125    0.000    0.000    0.000
       DS    0.000    1.000    0.000
     dT=     0.000    0.000    1.000
    0.000   -1.000   -3.125    3.550    3.900
       DS    0.000    0.000   -1.000
    3.900   -1.000   -3.125   -0.350
       DS    0.000    0.000   -1.000
     dT=     0.000    0.000    1.000
    0.000   -1.000   -3.125    3.550    1.000
       DS    1.000    0.000    0.000
    1.000    0.000   -3.125    3.550
       DS    1.000    0.000    0.000
     dT=     0.000    0.000    1.000
    0.000    0.000   -3.125   12.000    8.450
       DS    0.000    0.000   -1.000
    8.450    0.000   -3.125    3.550
       DS    0.000    0.000   -1.000
Number Ref   gpt-a    gpt-b  Grp Mat     b[m] div Title /  Support Conditions
  1807        1807     1107   21
     s[-]     x[m]     y[m]     z[m]     L[m]
     dT=     0.000    0.000    1.000
    0.000    0.000   -3.125   12.000    3.125
```

SOFiSTiK AG - www.sofistik.de

```
Composite bridge 38+50+38, b=14.25m, 2x2HL1100R HISTAR460 , slab 0.30m C30/37

     s[-]     x[m]     y[m]     z[m]     L[m]
       DS    0.000    1.000    0.000
    3.125    0.000    0.000   12.000
       DS    0.000    1.000    0.000
     dT=     0.000    0.000    1.000
    0.000    0.000   -3.125    3.550    3.125
       DS    0.000    1.000    0.000
    3.125    0.000    0.000    3.550
       DS    0.000    1.000    0.000
Number Ref   gpt-a    gpt-b  Grp Mat     b[m] div Title /  Support Conditions
  1810 8      1810     1811   50
     s[-]     x[m]     y[m]     z[m]     L[m]
     dT=     0.000    0.000    0.000
Number Ref   gpt-a    gpt-b  Grp Mat     b[m] div Title /  Support Conditions
  1811 8      1811     1812   50
     s[-]     x[m]     y[m]     z[m]     L[m]
     dT=     0.000    0.000    0.000
Number Ref   gpt-a    gpt-b  Grp Mat     b[m] div Title /  Support Conditions
  1812 8      1812     1813   50
     s[-]     x[m]     y[m]     z[m]     L[m]
     dT=     0.000    0.000    0.000
Number Ref   gpt-a    gpt-b  Grp Mat     b[m] div Title /  Support Conditions
  1813 8      1813     1814   50
     s[-]     x[m]     y[m]     z[m]     L[m]
     dT=     0.000    0.000    0.000
Number Ref   gpt-a    gpt-b  Grp Mat     b[m] div Title /  Support Conditions
  1814 8      1814     2810   50
     s[-]     x[m]     y[m]     z[m]     L[m]
     dT=     0.000    0.000    0.000
Number Ref   gpt-a    gpt-b  Grp Mat     b[m] div Title /  Support Conditions
  1900        1210     1910   50
     s[-]     x[m]     y[m]     z[m]     L[m]
     dT=     0.000    0.000    1.000
    0.000    0.000    8.000    0.000    3.125
       DS    0.000    1.000    0.000
    3.125    0.000   11.125    0.000
       DS    0.000    1.000    0.000
     dT=     0.000    0.000    1.000
    0.000   -1.000   11.125    3.550    3.900
       DS    0.000    0.000   -1.000
    3.900   -1.000   11.125   -0.350
       DS    0.000    0.000   -1.000
     dT=     0.000    0.000    1.000
    0.000   -1.000   11.125    3.550    1.000
       DS    1.000    0.000    0.000
    1.000    0.000   11.125    3.550
       DS    1.000    0.000    0.000
     dT=     0.000    0.000    1.000
    0.000    0.000   11.125   12.000    8.450
       DS    0.000    0.000   -1.000
    8.450    0.000   11.125    3.550
       DS    0.000    0.000   -1.000
Number Ref   gpt-a    gpt-b  Grp Mat     b[m] div Title /  Support Conditions
  1907        1207     1907   21
     s[-]     x[m]     y[m]     z[m]     L[m]
     dT=     0.000    0.000    1.000
    0.000    0.000    8.000   12.000    3.125
       DS    0.000    1.000    0.000
    3.125    0.000   11.125   12.000
       DS    0.000    1.000    0.000
     dT=     0.000    0.000    1.000
    0.000    0.000    8.000    3.550    3.125
       DS    0.000    1.000    0.000
    3.125    0.000   11.125    3.550
       DS    0.000    1.000    0.000
```

SOFiSTiK AG - www.sofistik.de

Composite bridge 38+50+38, b=14.25m, 2x2HL1100R HISTAR460 , slab 0.30m C30/37

```
Number Ref   gpt-a    gpt-b  Grp Mat     b[m] div Title /  Support Conditions
  1910 9      1910     1911   50
     s[-]     x[m]     y[m]     z[m]     L[m]
     dT=     0.000    0.000    0.000
Number Ref   gpt-a    gpt-b  Grp Mat     b[m] div Title /  Support Conditions
  1911 9      1911     1912   50
     s[-]     x[m]     y[m]     z[m]     L[m]
     dT=     0.000    0.000    0.000
Number Ref   gpt-a    gpt-b  Grp Mat     b[m] div Title /  Support Conditions
  1912 9      1912     1913   50
     s[-]     x[m]     y[m]     z[m]     L[m]
     dT=     0.000    0.000    0.000
Number Ref   gpt-a    gpt-b  Grp Mat     b[m] div Title /  Support Conditions
  1913 9      1913     1914   50
     s[-]     x[m]     y[m]     z[m]     L[m]
     dT=     0.000    0.000    0.000
Number Ref   gpt-a    gpt-b  Grp Mat     b[m] div Title /  Support Conditions
  1914 9      1914     2910   50
     s[-]     x[m]     y[m]     z[m]     L[m]
     dT=     0.000    0.000    0.000
Number Ref   gpt-a    gpt-b  Grp Mat     b[m] div Title /  Support Conditions
  2100        2110     2210   42
     s[-]     x[m]     y[m]     z[m]     L[m]
     dT=     0.000    0.000    1.000
    0.000   38.000    0.000    0.000    8.000
       DS    0.000    1.000    0.000
    8.000   38.000    8.000    0.000
       DS    0.000    1.000    0.000
Number Ref   gpt-a    gpt-b  Grp Mat     b[m] div Title /  Support Conditions
  2106        2107     2108   32
     s[-]     x[m]     y[m]     z[m]     L[m]
     dT=     0.000    0.000    1.000
    0.000   38.000    0.000   12.000    8.450
       DS    0.000    0.000   -1.000
    8.450   38.000    0.000    3.550
       DS    0.000    0.000   -1.000
Number Ref   gpt-a    gpt-b  Grp Mat     b[m] div Title /  Support Conditions
  2107        2107     2207   22
     s[-]     x[m]     y[m]     z[m]     L[m]
     dT=     0.000    0.000    1.000
    0.000   38.000    0.000   12.000    8.000
       DS    0.000    1.000    0.000
    8.000   38.000    8.000   12.000
       DS    0.000    1.000    0.000
Number Ref   gpt-a    gpt-b  Grp Mat     b[m] div Title /  Support Conditions
  2108        2108     2208   32
     s[-]     x[m]     y[m]     z[m]     L[m]
     dT=     0.000    0.000    1.000
    0.000   38.000    0.000    3.550    8.000
       DS    0.000    1.000    0.000
    8.000   38.000    8.000    3.550
       DS    0.000    1.000    0.000
Number Ref   gpt-a    gpt-b  Grp Mat     b[m] div Title /  Support Conditions
  2111 1      2111    22112  152
     s[-]     x[m]     y[m]     z[m]     L[m]
     dT=     0.000    0.000    0.000
Number Ref   gpt-a    gpt-b  Grp Mat     b[m] div Title /  Support Conditions
  2113 1      2113    22113   52
     s[-]     x[m]     y[m]     z[m]     L[m]
     dT=     0.000    0.000    0.000
Number Ref   gpt-a    gpt-b  Grp Mat     b[m] div Title /  Support Conditions
  2125        2127     2126   12
     s[-]     x[m]     y[m]     z[m]     L[m]
     dT=     0.000    0.000    1.000
    0.000   36.500    0.000   12.000   20.000
       DS    0.000    0.000    1.000
   20.000   36.500    0.000   32.000
```

SOFiSTiK AG - www.sofistik.de

```
Composite bridge 38+50+38, b=14.25m, 2x2HL1100R HISTAR460 , slab 0.30m C30/37

     s[-]     x[m]     y[m]     z[m]     L[m]
       DS    0.000    0.000    1.000
Number Ref   gpt-a    gpt-b  Grp Mat     b[m] div Title /  Support Conditions
  2135        2137     2136   12
     s[-]     x[m]     y[m]     z[m]     L[m]
     dT=     0.000    0.000    1.000
    0.000   39.500    0.000   12.000   20.000
       DS    0.000    0.000    1.000
   20.000   39.500    0.000   32.000
       DS    0.000    0.000    1.000
Number Ref   gpt-a    gpt-b  Grp Mat     b[m] div Title /  Support Conditions
  2206        2207     2208   32
     s[-]     x[m]     y[m]     z[m]     L[m]
     dT=     0.000    0.000    1.000
    0.000   38.000    8.000   12.000    8.450
       DS    0.000    0.000   -1.000
    8.450   38.000    8.000    3.550
       DS    0.000    0.000   -1.000
Number Ref   gpt-a    gpt-b  Grp Mat     b[m] div Title /  Support Conditions
  2210 2      2210     2211   62
     s[-]     x[m]     y[m]     z[m]     L[m]
     dT=     0.000    0.000    0.000
Number Ref   gpt-a    gpt-b  Grp Mat     b[m] div Title /  Support Conditions
  2211 2      2211    22212  152
     s[-]     x[m]     y[m]     z[m]     L[m]
     dT=     0.000    0.000    0.000
Number Ref   gpt-a    gpt-b  Grp Mat     b[m] div Title /  Support Conditions
  2212 2      2212     2213   52
     s[-]     x[m]     y[m]     z[m]     L[m]
     dT=     0.000    0.000    0.000
Number Ref   gpt-a    gpt-b  Grp Mat     b[m] div Title /  Support Conditions
  2213 2      2213    22213   52
     s[-]     x[m]     y[m]     z[m]     L[m]
     dT=     0.000    0.000    0.000
Number Ref   gpt-a    gpt-b  Grp Mat     b[m] div Title /  Support Conditions
  2214 2      2214     3210   63
     s[-]     x[m]     y[m]     z[m]     L[m]
     dT=     0.000    0.000    0.000
Number Ref   gpt-a    gpt-b  Grp Mat     b[m] div Title /  Support Conditions
  2225        2227     2226   12
     s[-]     x[m]     y[m]     z[m]     L[m]
     dT=     0.000    0.000    1.000
    0.000   36.500    8.000   12.000   20.000
       DS    0.000    0.000    1.000
   20.000   36.500    8.000   32.000
       DS    0.000    0.000    1.000
Number Ref   gpt-a    gpt-b  Grp Mat     b[m] div Title /  Support Conditions
  2235        2237     2236   12
     s[-]     x[m]     y[m]     z[m]     L[m]
     dT=     0.000    0.000    1.000
    0.000   39.500    8.000   12.000   20.000
       DS    0.000    0.000    1.000
   20.000   39.500    8.000   32.000
       DS    0.000    0.000    1.000
Number Ref   gpt-a    gpt-b  Grp Mat     b[m] div Title /  Support Conditions
  2800        2810     2110   50
     s[-]     x[m]     y[m]     z[m]     L[m]
     dT=     0.000    0.000    1.000
    0.000   38.000   -3.125    0.000    3.125
       DS    0.000    1.000    0.000
    3.125   38.000    0.000    0.000
       DS    0.000    1.000    0.000
Number Ref   gpt-a    gpt-b  Grp Mat     b[m] div Title /  Support Conditions
  2807        2807     2107   22
     s[-]     x[m]     y[m]     z[m]     L[m]
     dT=     0.000    0.000    1.000
    0.000   38.000   -3.125   12.000    3.125
```

SOFiSTiK AG - www.sofistik.de

```
Composite bridge 38+50+38, b=14.25m, 2x2HL1100R HISTAR460 , slab 0.30m C30/37

     s[-]     x[m]     y[m]     z[m]     L[m]
       DS    0.000    1.000    0.000
    3.125   38.000    0.000   12.000
       DS    0.000    1.000    0.000
Number Ref   gpt-a    gpt-b  Grp Mat     b[m] div Title /  Support Conditions
  2808        2808     2108   32
     s[-]     x[m]     y[m]     z[m]     L[m]
     dT=     0.000    0.000    1.000
    0.000   38.000   -3.125    3.550    3.125
       DS    0.000    1.000    0.000
    3.125   38.000    0.000    3.550
       DS    0.000    1.000    0.000
Number Ref   gpt-a    gpt-b  Grp Mat     b[m] div Title /  Support Conditions
  2810 8      2810     2811   50
     s[-]     x[m]     y[m]     z[m]     L[m]
     dT=     0.000    0.000    0.000
Number Ref   gpt-a    gpt-b  Grp Mat     b[m] div Title /  Support Conditions
  2811 8      2811     2812   50
     s[-]     x[m]     y[m]     z[m]     L[m]
     dT=     0.000    0.000    0.000
Number Ref   gpt-a    gpt-b  Grp Mat     b[m] div Title /  Support Conditions
  2812 8      2812     2813   50
     s[-]     x[m]     y[m]     z[m]     L[m]
     dT=     0.000    0.000    0.000
Number Ref   gpt-a    gpt-b  Grp Mat     b[m] div Title /  Support Conditions
  2813 8      2813     2814   50
     s[-]     x[m]     y[m]     z[m]     L[m]
     dT=     0.000    0.000    0.000
Number Ref   gpt-a    gpt-b  Grp Mat     b[m] div Title /  Support Conditions
  2814 8      2814     3810   50
     s[-]     x[m]     y[m]     z[m]     L[m]
     dT=     0.000    0.000    0.000
Number Ref   gpt-a    gpt-b  Grp Mat     b[m] div Title /  Support Conditions
  2900        2210     2910   50
     s[-]     x[m]     y[m]     z[m]     L[m]
     dT=     0.000    0.000    1.000
    0.000   38.000    8.000    0.000    3.125
       DS    0.000    1.000    0.000
    3.125   38.000   11.125    0.000
       DS    0.000    1.000    0.000
Number Ref   gpt-a    gpt-b  Grp Mat     b[m] div Title /  Support Conditions
  2907        2207     2907   22
     s[-]     x[m]     y[m]     z[m]     L[m]
     dT=     0.000    0.000    1.000
    0.000   38.000    8.000   12.000    3.125
       DS    0.000    1.000    0.000
    3.125   38.000   11.125   12.000
       DS    0.000    1.000    0.000
Number Ref   gpt-a    gpt-b  Grp Mat     b[m] div Title /  Support Conditions
  2908        2208     2908   32
     s[-]     x[m]     y[m]     z[m]     L[m]
     dT=     0.000    0.000    1.000
    0.000   38.000    8.000    3.550    3.125
       DS    0.000    1.000    0.000
    3.125   38.000   11.125    3.550
       DS    0.000    1.000    0.000
Number Ref   gpt-a    gpt-b  Grp Mat     b[m] div Title /  Support Conditions
  2910 9      2910     2911   50
     s[-]     x[m]     y[m]     z[m]     L[m]
     dT=     0.000    0.000    0.000
Number Ref   gpt-a    gpt-b  Grp Mat     b[m] div Title /  Support Conditions
  2911 9      2911     2912   50
     s[-]     x[m]     y[m]     z[m]     L[m]
     dT=     0.000    0.000    0.000
```

SOFiSTiK AG - www.sofistik.de

Composite bridge 38+50+38, b=14.25m, 2x2HL1100R HISTAR460 , slab 0.30m C30/37

```
Number Ref   gpt-a    gpt-b  Grp Mat     b[m] div Title /  Support Conditions
  2912 9      2912     2913   50
     s[-]     x[m]     y[m]     z[m]     L[m]
     dT=     0.000    0.000    0.000
Number Ref   gpt-a    gpt-b  Grp Mat     b[m] div Title /  Support Conditions
  2913 9      2913     2914   50
     s[-]     x[m]     y[m]     z[m]     L[m]
     dT=     0.000    0.000    0.000
Number Ref   gpt-a    gpt-b  Grp Mat     b[m] div Title /  Support Conditions
  2914 9      2914     3910   50
     s[-]     x[m]     y[m]     z[m]     L[m]
     dT=     0.000    0.000    0.000
Number Ref   gpt-a    gpt-b  Grp Mat     b[m] div Title /  Support Conditions
  3100        3110     3210   43
     s[-]     x[m]     y[m]     z[m]     L[m]
     dT=     0.000    0.000    1.000
    0.000   88.000    0.000    0.000    8.000
       DS    0.000    1.000    0.000
    8.000   88.000    8.000    0.000
       DS    0.000    1.000    0.000
Number Ref   gpt-a    gpt-b  Grp Mat     b[m] div Title /  Support Conditions
  3106        3107     3108   33
     s[-]     x[m]     y[m]     z[m]     L[m]
     dT=     0.000    0.000    1.000
    0.000   88.000    0.000   12.000    8.450
       DS    0.000    0.000   -1.000
    8.450   88.000    0.000    3.550
       DS    0.000    0.000   -1.000
Number Ref   gpt-a    gpt-b  Grp Mat     b[m] div Title /  Support Conditions
  3107        3107     3207   23
     s[-]     x[m]     y[m]     z[m]     L[m]
     dT=     0.000    0.000    1.000
    0.000   88.000    0.000   12.000    8.000
       DS    0.000    1.000    0.000
    8.000   88.000    8.000   12.000
       DS    0.000    1.000    0.000
Number Ref   gpt-a    gpt-b  Grp Mat     b[m] div Title /  Support Conditions
  3108        3108     3208   33
     s[-]     x[m]     y[m]     z[m]     L[m]
     dT=     0.000    0.000    1.000
    0.000   88.000    0.000    3.550    8.000
       DS    0.000    1.000    0.000
    8.000   88.000    8.000    3.550
       DS    0.000    1.000    0.000
Number Ref   gpt-a    gpt-b  Grp Mat     b[m] div Title /  Support Conditions
  3111 1      3111    23112  153
     s[-]     x[m]     y[m]     z[m]     L[m]
     dT=     0.000    0.000    0.000
Number Ref   gpt-a    gpt-b  Grp Mat     b[m] div Title /  Support Conditions
  3113 1      3113    23113   53
     s[-]     x[m]     y[m]     z[m]     L[m]
     dT=     0.000    0.000    0.000
Number Ref   gpt-a    gpt-b  Grp Mat     b[m] div Title /  Support Conditions
  3125        3127     3126   13
     s[-]     x[m]     y[m]     z[m]     L[m]
     dT=     0.000    0.000    1.000
    0.000   86.500    0.000   12.000   20.000
       DS    0.000    0.000    1.000
   20.000   86.500    0.000   32.000
       DS    0.000    0.000    1.000
Number Ref   gpt-a    gpt-b  Grp Mat     b[m] div Title /  Support Conditions
  3135        3137     3136   13
     s[-]     x[m]     y[m]     z[m]     L[m]
     dT=     0.000    0.000    1.000
    0.000   89.500    0.000   12.000   20.000
       DS    0.000    0.000    1.000
   20.000   89.500    0.000   32.000
```

SOFiSTiK AG - www.sofistik.de

```
Composite bridge 38+50+38, b=14.25m, 2x2HL1100R HISTAR460 , slab 0.30m C30/37

     s[-]     x[m]     y[m]     z[m]     L[m]
       DS    0.000    0.000    1.000
Number Ref   gpt-a    gpt-b  Grp Mat     b[m] div Title /  Support Conditions
  3206        3207     3208   33
     s[-]     x[m]     y[m]     z[m]     L[m]
     dT=     0.000    0.000    1.000
    0.000   88.000    8.000   12.000    8.450
       DS    0.000    0.000   -1.000
    8.450   88.000    8.000    3.550
       DS    0.000    0.000   -1.000
Number Ref   gpt-a    gpt-b  Grp Mat     b[m] div Title /  Support Conditions
  3210 2      3210     3211   63
     s[-]     x[m]     y[m]     z[m]     L[m]
     dT=     0.000    0.000    0.000
Number Ref   gpt-a    gpt-b  Grp Mat     b[m] div Title /  Support Conditions
  3211 2      3211    23212  153
     s[-]     x[m]     y[m]     z[m]     L[m]
     dT=     0.000    0.000    0.000
Number Ref   gpt-a    gpt-b  Grp Mat     b[m] div Title /  Support Conditions
  3212 2      3212     3213   53
     s[-]     x[m]     y[m]     z[m]     L[m]
     dT=     0.000    0.000    0.000
Number Ref   gpt-a    gpt-b  Grp Mat     b[m] div Title /  Support Conditions
  3213 2      3213    23213   53
     s[-]     x[m]     y[m]     z[m]     L[m]
     dT=     0.000    0.000    0.000
Number Ref   gpt-a    gpt-b  Grp Mat     b[m] div Title /  Support Conditions
  3214 2      3214     4210   64
     s[-]     x[m]     y[m]     z[m]     L[m]
     dT=     0.000    0.000    0.000
Number Ref   gpt-a    gpt-b  Grp Mat     b[m] div Title /  Support Conditions
  3225        3227     3226   13
     s[-]     x[m]     y[m]     z[m]     L[m]
     dT=     0.000    0.000    1.000
    0.000   86.500    8.000   12.000   20.000
       DS    0.000    0.000    1.000
   20.000   86.500    8.000   32.000
       DS    0.000    0.000    1.000
Number Ref   gpt-a    gpt-b  Grp Mat     b[m] div Title /  Support Conditions
  3235        3237     3236   13
     s[-]     x[m]     y[m]     z[m]     L[m]
     dT=     0.000    0.000    1.000
    0.000   89.500    8.000   12.000   20.000
       DS    0.000    0.000    1.000
   20.000   89.500    8.000   32.000
       DS    0.000    0.000    1.000
Number Ref   gpt-a    gpt-b  Grp Mat     b[m] div Title /  Support Conditions
  3800        3810     3110   50
     s[-]     x[m]     y[m]     z[m]     L[m]
     dT=     0.000    0.000    1.000
    0.000   88.000   -3.125    0.000    3.125
       DS    0.000    1.000    0.000
    3.125   88.000    0.000    0.000
       DS    0.000    1.000    0.000
Number Ref   gpt-a    gpt-b  Grp Mat     b[m] div Title /  Support Conditions
  3807        3807     3107   23
     s[-]     x[m]     y[m]     z[m]     L[m]
     dT=     0.000    0.000    1.000
    0.000   88.000   -3.125   12.000    3.125
       DS    0.000    1.000    0.000
    3.125   88.000    0.000   12.000
       DS    0.000    1.000    0.000
Number Ref   gpt-a    gpt-b  Grp Mat     b[m] div Title /  Support Conditions
  3808        3808     3108   33
     s[-]     x[m]     y[m]     z[m]     L[m]
     dT=     0.000    0.000    1.000
    0.000   88.000   -3.125    3.550    3.125
```

SOFiSTiK AG - www.sofistik.de

Composite bridge 38+50+38, b=14.25m, 2x2HL1100R HISTAR460 , slab 0.30m C30/37

```
     s[-]     x[m]     y[m]     z[m]     L[m]
       DS    0.000    1.000    0.000
    3.125   88.000    0.000    3.550
       DS    0.000    1.000    0.000
Number Ref   gpt-a    gpt-b  Grp Mat     b[m] div Title /  Support Conditions
  3810 8      3810     3811   50
     s[-]     x[m]     y[m]     z[m]     L[m]
     dT=     0.000    0.000    0.000
Number Ref   gpt-a    gpt-b  Grp Mat     b[m] div Title /  Support Conditions
  3811 8      3811     3812   50
     s[-]     x[m]     y[m]     z[m]     L[m]
     dT=     0.000    0.000    0.000
Number Ref   gpt-a    gpt-b  Grp Mat     b[m] div Title /  Support Conditions
  3812 8      3812     3813   50
     s[-]     x[m]     y[m]     z[m]     L[m]
     dT=     0.000    0.000    0.000
Number Ref   gpt-a    gpt-b  Grp Mat     b[m] div Title /  Support Conditions
  3813 8      3813     3814   50
     s[-]     x[m]     y[m]     z[m]     L[m]
     dT=     0.000    0.000    0.000
Number Ref   gpt-a    gpt-b  Grp Mat     b[m] div Title /  Support Conditions
  3814 8      3814     4810   50
     s[-]     x[m]     y[m]     z[m]     L[m]
     dT=     0.000    0.000    0.000
Number Ref   gpt-a    gpt-b  Grp Mat     b[m] div Title /  Support Conditions
  3900        3210     3910   50
     s[-]     x[m]     y[m]     z[m]     L[m]
     dT=     0.000    0.000    1.000
    0.000   88.000    8.000    0.000    3.125
       DS    0.000    1.000    0.000
    3.125   88.000   11.125    0.000
       DS    0.000    1.000    0.000
Number Ref   gpt-a    gpt-b  Grp Mat     b[m] div Title /  Support Conditions
  3907        3207     3907   23
     s[-]     x[m]     y[m]     z[m]     L[m]
     dT=     0.000    0.000    1.000
    0.000   88.000    8.000   12.000    3.125
       DS    0.000    1.000    0.000
    3.125   88.000   11.125   12.000
       DS    0.000    1.000    0.000
Number Ref   gpt-a    gpt-b  Grp Mat     b[m] div Title /  Support Conditions
  3908        3208     3908   33
     s[-]     x[m]     y[m]     z[m]     L[m]
     dT=     0.000    0.000    1.000
    0.000   88.000    8.000    3.550    3.125
       DS    0.000    1.000    0.000
    3.125   88.000   11.125    3.550
       DS    0.000    1.000    0.000
Number Ref   gpt-a    gpt-b  Grp Mat     b[m] div Title /  Support Conditions
  3910 9      3910     3911   50
     s[-]     x[m]     y[m]     z[m]     L[m]
     dT=     0.000    0.000    0.000
Number Ref   gpt-a    gpt-b  Grp Mat     b[m] div Title /  Support Conditions
  3911 9      3911     3912   50
     s[-]     x[m]     y[m]     z[m]     L[m]
     dT=     0.000    0.000    0.000
Number Ref   gpt-a    gpt-b  Grp Mat     b[m] div Title /  Support Conditions
  3912 9      3912     3913   50
     s[-]     x[m]     y[m]     z[m]     L[m]
     dT=     0.000    0.000    0.000
Number Ref   gpt-a    gpt-b  Grp Mat     b[m] div Title /  Support Conditions
  3913 9      3913     3914   50
     s[-]     x[m]     y[m]     z[m]     L[m]
     dT=     0.000    0.000    0.000
```

SOFiSTiK AG - www.sofistik.de

Composite bridge 38+50+38, b=14.25m, 2x2HL1100R HISTAR460 , slab 0.30m C30/37

```
Number Ref   gpt-a    gpt-b  Grp Mat     b[m] div Title /  Support Conditions
  3914 9      3914     4910   50
     s[-]     x[m]     y[m]     z[m]     L[m]
     dT=     0.000    0.000    0.000
     dT=     0.000    0.000    1.000
    0.000  127.000   -3.125    3.550   14.250
       DS    0.000    1.000    0.000
   14.250  127.000   11.125    3.550
       DS    0.000    1.000    0.000
     dT=     0.000    0.000    1.000
    0.000  127.000   -3.125   -0.350   14.250
       DS    0.000    1.000    0.000
   14.250  127.000   11.125   -0.350
       DS    0.000    1.000    0.000
Number Ref   gpt-a    gpt-b  Grp Mat     b[m] div Title /  Support Conditions
  4100        4110     4210   44
     s[-]     x[m]     y[m]     z[m]     L[m]
     dT=     0.000    0.000    1.000
    0.000  126.000    0.000    0.000    8.000
       DS    0.000    1.000    0.000
    8.000  126.000    8.000    0.000
       DS    0.000    1.000    0.000
Number Ref   gpt-a    gpt-b  Grp Mat     b[m] div Title /  Support Conditions
  4107        4107     4207   24
     s[-]     x[m]     y[m]     z[m]     L[m]
     dT=     0.000    0.000    1.000
    0.000  126.000    0.000   12.000    8.000
       DS    0.000    1.000    0.000
    8.000  126.000    8.000   12.000
       DS    0.000    1.000    0.000
     dT=     0.000    0.000    1.000
    0.000  126.000    0.000    3.550    8.000
       DS    0.000    1.000    0.000
    8.000  126.000    8.000    3.550
       DS    0.000    1.000    0.000
Number Ref   gpt-a    gpt-b  Grp Mat     b[m] div Title /  Support Conditions
  4125        4127     4126   14
     s[-]     x[m]     y[m]     z[m]     L[m]
     dT=     0.000    0.000    1.000
    0.000  124.500    0.000   12.000   20.000
       DS    0.000    0.000    1.000
   20.000  124.500    0.000   32.000
       DS    0.000    0.000    1.000
Number Ref   gpt-a    gpt-b  Grp Mat     b[m] div Title /  Support Conditions
  4135        4137     4136   14
     s[-]     x[m]     y[m]     z[m]     L[m]
     dT=     0.000    0.000    1.000
    0.000  127.500    0.000   12.000   20.000
       DS    0.000    0.000    1.000
   20.000  127.500    0.000   32.000
       DS    0.000    0.000    1.000
Number Ref   gpt-a    gpt-b  Grp Mat     b[m] div Title /  Support Conditions
  4225        4227     4226   14
     s[-]     x[m]     y[m]     z[m]     L[m]
     dT=     0.000    0.000    1.000
    0.000  124.500    8.000   12.000   20.000
       DS    0.000    0.000    1.000
   20.000  124.500    8.000   32.000
       DS    0.000    0.000    1.000
Number Ref   gpt-a    gpt-b  Grp Mat     b[m] div Title /  Support Conditions
  4235        4237     4236   14
     s[-]     x[m]     y[m]     z[m]     L[m]
     dT=     0.000    0.000    1.000
    0.000  127.500    8.000   12.000   20.000
       DS    0.000    0.000    1.000
   20.000  127.500    8.000   32.000
       DS    0.000    0.000    1.000
```

SOFiSTiK AG - www.sofistik.de

Composite bridge 38+50+38, b=14.25m, 2x2HL1100R HISTAR460 , slab 0.30m C30/37

```
Number Ref   gpt-a    gpt-b  Grp Mat     b[m] div Title /  Support Conditions
  4800        4810     4110   50
     s[-]     x[m]     y[m]     z[m]     L[m]
     dT=     0.000    0.000    1.000
    0.000  126.000   -3.125    0.000    3.125
       DS    0.000    1.000    0.000
    3.125  126.000    0.000    0.000
       DS    0.000    1.000    0.000
     dT=     0.000    0.000    1.000
    0.000  127.000   -3.125    3.550    3.900
       DS    0.000    0.000   -1.000
    3.900  127.000   -3.125   -0.350
       DS    0.000    0.000   -1.000
     dT=     0.000    0.000    1.000
    0.000  127.000   -3.125    3.550    1.000
       DS   -1.000    0.000    0.000
    1.000  126.000   -3.125    3.550
       DS   -1.000    0.000    0.000
     dT=     0.000    0.000    1.000
    0.000  126.000   -3.125   12.000    8.450
       DS    0.000    0.000   -1.000
    8.450  126.000   -3.125    3.550
       DS    0.000    0.000   -1.000
Number Ref   gpt-a    gpt-b  Grp Mat     b[m] div Title /  Support Conditions
  4807        4807     4107   24
     s[-]     x[m]     y[m]     z[m]     L[m]
     dT=     0.000    0.000    1.000
    0.000  126.000   -3.125   12.000    3.125
       DS    0.000    1.000    0.000
    3.125  126.000    0.000   12.000
       DS    0.000    1.000    0.000
     dT=     0.000    0.000    1.000
    0.000  126.000   -3.125    3.550    3.125
       DS    0.000    1.000    0.000
    3.125  126.000    0.000    3.550
       DS    0.000    1.000    0.000
Number Ref   gpt-a    gpt-b  Grp Mat     b[m] div Title /  Support Conditions
  4900        4210     4910   50
     s[-]     x[m]     y[m]     z[m]     L[m]
     dT=     0.000    0.000    1.000
    0.000  126.000    8.000    0.000    3.125
       DS    0.000    1.000    0.000
    3.125  126.000   11.125    0.000
       DS    0.000    1.000    0.000
     dT=     0.000    0.000    1.000
    0.000  127.000   11.125    3.550    3.900
       DS    0.000    0.000   -1.000
    3.900  127.000   11.125   -0.350
       DS    0.000    0.000   -1.000
     dT=     0.000    0.000    1.000
    0.000  127.000   11.125    3.550    1.000
       DS   -1.000    0.000    0.000
    1.000  126.000   11.125    3.550
       DS   -1.000    0.000    0.000
     dT=     0.000    0.000    1.000
    0.000  126.000   11.125   12.000    8.450
       DS    0.000    0.000   -1.000
    8.450  126.000   11.125    3.550
       DS    0.000    0.000   -1.000
Number Ref   gpt-a    gpt-b  Grp Mat     b[m] div Title /  Support Conditions
  4907        4207     4907   24
     s[-]     x[m]     y[m]     z[m]     L[m]
     dT=     0.000    0.000    1.000
    0.000  126.000    8.000   12.000    3.125
       DS    0.000    1.000    0.000
    3.125  126.000   11.125   12.000
       DS    0.000    1.000    0.000
```

SOFiSTiK AG - www.sofistik.de

Composite bridge 38+50+38, b=14.25m, 2x2HL1100R HISTAR460 , slab 0.30m C30/37

```
     s[-]      x[m]      y[m]      z[m]      L[m]
     dT=      0.000     0.000     1.000
    0.000   126.000     8.000     3.550     3.125
       DS     0.000     1.000     0.000
    3.125   126.000    11.125     3.550
       DS     0.000     1.000     0.000
Number Ref   gpt-a     gpt-b   Grp Mat      b[m] div Title /  Support Conditions
 21112 1     21112      1112    51
     s[-]      x[m]      y[m]      z[m]      L[m]
     dT=      0.000     0.000     0.000
Number Ref   gpt-a     gpt-b   Grp Mat      b[m] div Title /  Support Conditions
 21113 1     21113      1114   151
     s[-]      x[m]      y[m]      z[m]      L[m]
     dT=      0.000     0.000     0.000
Number Ref   gpt-a     gpt-b   Grp Mat      b[m] div Title /  Support Conditions
 21212 2     21212      1212    51
     s[-]      x[m]      y[m]      z[m]      L[m]
     dT=      0.000     0.000     0.000
Number Ref   gpt-a     gpt-b   Grp Mat      b[m] div Title /  Support Conditions
 21213 2     21213      1214   151
     s[-]      x[m]      y[m]      z[m]      L[m]
     dT=      0.000     0.000     0.000
Number Ref   gpt-a     gpt-b   Grp Mat      b[m] div Title /  Support Conditions
 22112 1     22112      2112    52
     s[-]      x[m]      y[m]      z[m]      L[m]
     dT=      0.000     0.000     0.000
Number Ref   gpt-a     gpt-b   Grp Mat      b[m] div Title /  Support Conditions
 22113 1     22113      2114   152
     s[-]      x[m]      y[m]      z[m]      L[m]
     dT=      0.000     0.000     0.000
Number Ref   gpt-a     gpt-b   Grp Mat      b[m] div Title /  Support Conditions
 22212 2     22212      2212    52
     s[-]      x[m]      y[m]      z[m]      L[m]
     dT=      0.000     0.000     0.000
Number Ref   gpt-a     gpt-b   Grp Mat      b[m] div Title /  Support Conditions
 22213 2     22213      2214   152
     s[-]      x[m]      y[m]      z[m]      L[m]
     dT=      0.000     0.000     0.000
Number Ref   gpt-a     gpt-b   Grp Mat      b[m] div Title /  Support Conditions
 23112 1     23112      3112    53
     s[-]      x[m]      y[m]      z[m]      L[m]
     dT=      0.000     0.000     0.000
Number Ref   gpt-a     gpt-b   Grp Mat      b[m] div Title /  Support Conditions
 23113 1     23113      3114   153
     s[-]      x[m]      y[m]      z[m]      L[m]
     dT=      0.000     0.000     0.000
Number Ref   gpt-a     gpt-b   Grp Mat      b[m] div Title /  Support Conditions
 23212 2     23212      3212    53
     s[-]      x[m]      y[m]      z[m]      L[m]
     dT=      0.000     0.000     0.000
Number Ref   gpt-a     gpt-b   Grp Mat      b[m] div Title /  Support Conditions
 23213 2     23213      3214   153
     s[-]      x[m]      y[m]      z[m]      L[m]
     dT=      0.000     0.000     0.000
```

Structural Lines - with Section Properties

Number	GPT-A	GPT-B	Type	Grp	NoS	NoP	div	Hinges-start	Hinges-end
1001	1110	1115	BEAM	61	153	0	0		
1002	1115	1111	BEAM	61	153	0	0		
1003	1112	1116	BEAM	51	151	0	0		
1004	1116	1113	BEAM	51	151	0	0		
1005	1114	1117	BEAM	62	153	0	0		
1006	1117	2110	BEAM	62	153	0	0		
1007	2110	2115	BEAM	62	153: 253	0	0		
1009	2115	2111	BEAM	62	153: 253	0	0		
1011	2112	2116	BEAM	52	251	0	0		
1012	2116	2113	BEAM	52	251	0	0		

SOFiSTiK AG - www.sofistik.de

Composite bridge 38+50+38, b=14.25m, 2x2HL1100R HISTAR460 , slab 0.30m C30/37

Structural Lines - with Section Properties

Number	GPT-A	GPT-B	Type	Grp	NoS	NoP	div	Hinges-start	Hinges-end
1013	2114	2117	BEAM	63	253	0	0		
1014	2117	3110	BEAM	63	253	0	0		
1015	3110	3115	BEAM	63	253: 353	0	0		
1016	3115	3111	BEAM	63	253: 353	0	0		
1017	3112	3116	BEAM	53	351	0	0		
1018	3116	3113	BEAM	53	351	0	0		
1019	3114	3117	BEAM	64	353	0	0		
1020	3117	4110	BEAM	64	353	0	0		
1100	1110	1210	BEAM	41	41	0	0		
1107	1107	1207		21	21	0	0		
1111	1111	21112	BEAM	151	151	0	0		
1113	1113	21113	BEAM	51	151	0	0		
1125	1127	1126		11	11	1	0		
1135	1137	1136		11	11	1	0		
1210	1210	1211	BEAM	61	153	0	0		
1211	1211	21212	BEAM	151	151	0	0		
1212	1212	1213	BEAM	51	151	0	0		
1213	1213	21213	BEAM	51	151	0	0		
1214	1214	2210	BEAM	62	153	0	0		
1225	1227	1226		11	11	1	0		
1235	1237	1236		11	11	1	0		
1800	1810	1110	BEAM	50	10	0	0		
1807	1807	1107		21	21	0	0		
1810	1810	1811	BEAM	50	10	0	0		
1811	1811	1812	BEAM	50	10	0	0		
1812	1812	1813	BEAM	50	10	0	0		
1813	1813	1814	BEAM	50	10	0	0		
1814	1814	2810	BEAM	50	10	0	0		
1900	1210	1910	BEAM	50	10	0	0		
1907	1207	1907		21	21	0	0		
1910	1910	1911	BEAM	50	10	0	0		
1911	1911	1912	BEAM	50	10	0	0		
1912	1912	1913	BEAM	50	10	0	0		
1913	1913	1914	BEAM	50	10	0	0		
1914	1914	2910	BEAM	50	10	0	0		
2100	2110	2210	BEAM	42	42	0	0		
2106	2107	2108		32	30	0	0		
2107	2107	2207		22	22	0	0		
2108	2108	2208		32	32	0	0		
2111	2111	22112	BEAM	152	253	0	0		My
2113	2113	22113	BEAM	52	251	0	0		
2125	2127	2126		12	12	2	0		
2135	2137	2136		12	12	2	0		
2206	2207	2208		32	30	0	0		
2210	2210	2211	BEAM	62	153: 253	0	0		
2211	2211	22212	BEAM	152	253	0	0		My
2212	2212	2213	BEAM	52	251	0	0		
2213	2213	22213	BEAM	52	251	0	0		
2214	2214	3210	BEAM	63	253	0	0		
2225	2227	2226		12	12	2	0		
2235	2237	2236		12	12	2	0		
2800	2810	2110	BEAM	50	10	0	0		
2807	2807	2107		22	22	0	0		
2808	2808	2108		32	32	0	0		
2810	2810	2811	BEAM	50	10	0	0		
2811	2811	2812	BEAM	50	10	0	0		
2812	2812	2813	BEAM	50	10	0	0		
2813	2813	2814	BEAM	50	10	0	0		
2814	2814	3810	BEAM	50	10	0	0		
2900	2210	2910	BEAM	50	10	0	0		
2907	2207	2907		22	22	0	0		
2908	2208	2908		32	32	0	0		
2910	2910	2911	BEAM	50	10	0	0		
2911	2911	2912	BEAM	50	10	0	0		
2912	2912	2913	BEAM	50	10	0	0		

SOFiSTiK AG - www.sofistik.de

Composite bridge 38+50+38, b=14.25m, 2x2HL1100R HISTAR460 , slab 0.30m C30/37

Structural Lines - with Section Properties

Number	GPT-A	GPT-B	Type	Grp	NoS	NoP	div	Hinges-start	Hinges-end
2913	2913	2914	BEAM	50	10	0	0		
2914	2914	3910	BEAM	50	10	0	0		
3100	3110	3210	BEAM	43	43	0	0		
3106	3107	3108		33	30	0	0		
3107	3107	3207		23	23	0	0		
3108	3108	3208		33	33	0	0		
3111	3111	23112	BEAM	153	353	0	0		My
3113	3113	23113	BEAM	53	351	0	0		
3125	3127	3126		13	13	3	0		
3135	3137	3136		13	13	3	0		
3206	3207	3208		33	30	0	0		
3210	3210	3211	BEAM	63	253: 353	0	0		
3211	3211	23212	BEAM	153	353	0	0		My
3212	3212	3213	BEAM	53	351	0	0		
3213	3213	23213	BEAM	53	351	0	0		
3214	3214	4210	BEAM	64	353	0	0		
3225	3227	3226		13	13	3	0		
3235	3237	3236		13	13	3	0		
3800	3810	3110	BEAM	50	10	0	0		
3807	3807	3107		23	23	0	0		
3808	3808	3108		33	33	0	0		
3810	3810	3811	BEAM	50	10	0	0		
3811	3811	3812	BEAM	50	10	0	0		
3812	3812	3813	BEAM	50	10	0	0		
3813	3813	3814	BEAM	50	10	0	0		
3814	3814	4810	BEAM	50	10	0	0		
3900	3210	3910	BEAM	50	10	0	0		
3907	3207	3907		23	23	0	0		
3908	3208	3908		33	33	0	0		
3910	3910	3911	BEAM	50	10	0	0		
3911	3911	3912	BEAM	50	10	0	0		
3912	3912	3913	BEAM	50	10	0	0		
3913	3913	3914	BEAM	50	10	0	0		
3914	3914	4910	BEAM	50	10	0	0		
4100	4110	4210	BEAM	44	44	0	0		
4107	4107	4207		24	24	0	0		
4125	4127	4126		14	14	4	0		
4135	4137	4136		14	14	4	0		
4225	4227	4226		14	14	4	0		
4235	4237	4236		14	14	4	0		
4800	4810	4110	BEAM	50	10	0	0		
4807	4807	4107		24	24	0	0		
4900	4210	4910	BEAM	50	10	0	0		
4907	4207	4907		24	24	0	0		
21112	21112	1112	BEAM	51	151	0	0		
21113	21113	1114	BEAM	151	153	0	0		
21212	21212	1212	BEAM	51	151	0	0		
21213	21213	1214	BEAM	151	153	0	0		
22112	22112	2112	BEAM	52	251	0	0		
22113	22113	2114	BEAM	152	253	0	0		
22212	22212	2212	BEAM	52	251	0	0		
22213	22213	2214	BEAM	152	253	0	0		
23112	23112	3112	BEAM	53	351	0	0		
23113	23113	3114	BEAM	153	351	0	0		
23212	23212	3212	BEAM	53	351	0	0		
23213	23213	3214	BEAM	153	351	0	0		

Structural Areas

Number	Grp	Mat	NoR	QUADtype	local-x	t[m]	Title / Support Conditions
1010	31	50	500	PlMeRn	SURF	1.800	przycz.A

	Number	gpt-a	gpt-b	gpt-m	t[m]	Mat	Hinges
Outer	1806	1808	1807				
Outer	1807	1807	1107				
Outer	1107	1107	1207				
Outer	1907	1207	1907				

SOFiSTiK AG - www.sofistik.de

Composite bridge 38+50+38, b=14.25m, 2x2HL1100R HISTAR460 , slab 0.30m C30/37

```
                Number  gpt-a  gpt-b  gpt-m   t[m] Mat Hinges
        Outer     1906   1907   1908
        Outer     1908   1908   1208
        Outer     1108   1208   1108
        Outer     1808   1108   1808
                                          x[m]     y[m]     z[m]   t[m]   w[-]
        Surface-Geometry        flat     0.000    1.000    0.000
                                         0.000    0.000   -1.000
                                        -1.000    0.000    0.000
                                         0.000    4.000    7.775
Number  Grp Mat NoR QUADtype        local-x   t[m] Title /  Support Conditions
  1011   31  50 500 PlMeRn            SURF  0.300 przycz.A
                Number  gpt-a  gpt-b  gpt-m   t[m] Mat Hinges
        Outer     1008   1803   1903
        Outer     1903   1903   1904
        Outer     1010   1904   1804
        Outer     1803   1804   1803
                                          x[m]     y[m]     z[m]   t[m]   w[-]
        Surface-Geometry        flat     0.000    1.000    0.000
                                         0.000    0.000   -1.000
                                        -1.000    0.000    0.000
                                        -1.000    4.000    1.600
Number  Grp Mat NoR QUADtype        local-x   t[m] Title /  Support Conditions
  1012   31  50 500 PlMeRn            SURF  0.300 przycz.A
                Number  gpt-a  gpt-b  gpt-m   t[m] Mat Hinges
        Outer     1008   1803   1903
        Outer     1904   1903   1908
        Outer     1908   1908   1208
        Outer     1108   1208   1108
        Outer     1808   1108   1808
        Outer     1804   1808   1803
                                          x[m]     y[m]     z[m]   t[m]   w[-]
        Surface-Geometry        flat     1.000    0.000    0.000
                                         0.000   -1.000    0.000
                                         0.000    0.000   -1.000
                                        -0.500    4.000    3.550
Number  Grp Mat NoR QUADtype        local-x   t[m] Title /  Support Conditions
  1100   81  30 300 PlMeRn/DN         SURF         1100
                Number  gpt-a  gpt-b  gpt-m   t[m] Mat Hinges
        Outer     1100   1110   1210
        Outer     1210   1210   1211
        Outer     1211   1211  21212
        Outer    21212  21212   1212
        Outer     1212   1212   1213
        Outer     1213   1213  21213
        Outer    21213  21213   1214
        Outer     1214   1214   2210
        Outer     2100   2210   2110
        Outer     1006   2110   1117
        Outer     1005   1117   1114
        Outer    21113   1114  21113
        Outer     1113  21113   1113
        Outer     1004   1113   1116
        Outer     1003   1116   1112
        Outer    21112   1112  21112
        Outer     1111  21112   1111
        Outer     1002   1111   1115
        Outer     1001   1115   1110
                                          x[m]     y[m]     z[m]   t[m]   w[-]
        Surface-Geometry        flat     1.000    0.000    0.000
                                         0.000   -1.000    0.000
                                         0.000    0.000   -1.000
                                        19.000    4.000    0.000
Number  Grp Mat NoR QUADtype        local-x   t[m] Title /  Support Conditions
  1800   81  30 300 PlMeRn/DN         SURF  0.300 1100
```

SOFiSTiK AG - www.sofistik.de

Composite bridge 38+50+38, b=14.25m, 2x2HL1100R HISTAR460 , slab 0.30m C30/37

	Number	gpt-a	gpt-b	gpt-m	t[m]	Mat	Hinges
Outer	1800	1810	1110				
Outer	1001	1110	1115				
Outer	1002	1115	1111				
Outer	1111	1111	21112				
Outer	21112	21112	1112				
Outer	1003	1112	1116				
Outer	1004	1116	1113				
Outer	1113	1113	21113				
Outer	21113	21113	1114				
Outer	1005	1114	1117				
Outer	1006	1117	2110				
Outer	2800	2110	2810				
Outer	1814	2810	1814				
Outer	1813	1814	1813				
Outer	1812	1813	1812				
Outer	1811	1812	1811				
Outer	1810	1811	1810				

		x[m]	y[m]	z[m]	t[m]	w[-]
Surface-Geometry	flat	1.000	0.000	0.000		
		0.000	-1.000	0.000		
		0.000	0.000	-1.000		
		19.000	-1.562	0.000		

Number	Grp	Mat	NoR	QUADtype	local-x	t[m]	Title / Support Conditions
1900	81	30	300	PlMeRn/DN	SURF	0.300	1100

	Number	gpt-a	gpt-b	gpt-m	t[m]	Mat	Hinges
Outer	1900	1210	1910				
Outer	1910	1910	1911				
Outer	1911	1911	1912				
Outer	1912	1912	1913				
Outer	1913	1913	1914				
Outer	1914	1914	2910				
Outer	2900	2910	2210				
Outer	1214	2210	1214				
Outer	21213	1214	21213				
Outer	1213	21213	1213				
Outer	1212	1213	1212				
Outer	21212	1212	21212				
Outer	1211	21212	1211				
Outer	1210	1211	1210				

		x[m]	y[m]	z[m]	t[m]	w[-]
Surface-Geometry	flat	1.000	0.000	0.000		
		0.000	-1.000	0.000		
		0.000	0.000	-1.000		
		19.000	9.562	0.000		

Number	Grp	Mat	NoR	QUADtype	local-x	t[m]	Title / Support Conditions
2100	82	30	300	PlMeRn/DN	SURF		1100

	Number	gpt-a	gpt-b	gpt-m	t[m]	Mat	Hinges
Outer	2100	2110	2210				
Outer	2210	2210	2211				
Outer	2211	2211	22212				
Outer	22212	22212	2212				
Outer	2212	2212	2213				
Outer	2213	2213	22213				
Outer	22213	22213	2214				
Outer	2214	2214	3210				
Outer	3100	3210	3110				
Outer	1014	3110	2117				
Outer	1013	2117	2114				
Outer	22113	2114	22113				
Outer	2113	22113	2113				
Outer	1012	2113	2116				
Outer	1011	2116	2112				
Outer	22112	2112	22112				
Outer	2111	22112	2111				
Outer	1009	2111	2115				
Outer	1007	2115	2110				

SOFiSTiK AG - www.sofistik.de

Composite bridge 38+50+38, b=14.25m, 2x2HL1100R HISTAR460 , slab 0.30m C30/37

```
                                        x[m]     y[m]     z[m]   t[m]   w[-]
        Surface-Geometry       flat    1.000    0.000    0.000
                                       0.000   -1.000    0.000
                                       0.000    0.000   -1.000
                                      63.000    4.000    0.000
Number  Grp Mat NoR QUADtype       local-x   t[m] Title /  Support Conditions
  2800   82  30 300 PlMeRn/DN         SURF  0.300 1100
              Number  gpt-a  gpt-b  gpt-m   t[m] Mat Hinges
        Outer    2800   2810   2110
        Outer    1007   2110   2115
        Outer    1009   2115   2111
        Outer    2111   2111  22112
        Outer   22112  22112   2112
        Outer    1011   2112   2116
        Outer    1012   2116   2113
        Outer    2113   2113  22113
        Outer   22113  22113   2114
        Outer    1013   2114   2117
        Outer    1014   2117   3110
        Outer    3800   3110   3810
        Outer    2814   3810   2814
        Outer    2813   2814   2813
        Outer    2812   2813   2812
        Outer    2811   2812   2811
        Outer    2810   2811   2810
                                        x[m]     y[m]     z[m]   t[m]   w[-]
        Surface-Geometry       flat    1.000    0.000    0.000
                                       0.000   -1.000    0.000
                                       0.000    0.000   -1.000
                                      63.000   -1.562    0.000
Number  Grp Mat NoR QUADtype       local-x   t[m] Title /  Support Conditions
  2900   82  30 300 PlMeRn/DN         SURF  0.300 1100
              Number  gpt-a  gpt-b  gpt-m   t[m] Mat Hinges
        Outer    2900   2210   2910
        Outer    2910   2910   2911
        Outer    2911   2911   2912
        Outer    2912   2912   2913
        Outer    2913   2913   2914
        Outer    2914   2914   3910
        Outer    3900   3910   3210
        Outer    2214   3210   2214
        Outer   22213   2214  22213
        Outer    2213  22213   2213
        Outer    2212   2213   2212
        Outer   22212   2212  22212
        Outer    2211  22212   2211
        Outer    2210   2211   2210
                                        x[m]     y[m]     z[m]   t[m]   w[-]
        Surface-Geometry       flat    1.000    0.000    0.000
                                       0.000   -1.000    0.000
                                       0.000    0.000   -1.000
                                      63.000    9.562    0.000
Number  Grp Mat NoR QUADtype       local-x   t[m] Title /  Support Conditions
  3100   83  30 300 PlMeRn/DN         SURF        1100
              Number  gpt-a  gpt-b  gpt-m   t[m] Mat Hinges
        Outer    3100   3110   3210
        Outer    3210   3210   3211
        Outer    3211   3211  23212
        Outer   23212  23212   3212
        Outer    3212   3212   3213
        Outer    3213   3213  23213
        Outer   23213  23213   3214
        Outer    3214   3214   4210
        Outer    4100   4210   4110
        Outer    1020   4110   3117
        Outer    1019   3117   3114
        Outer   23113   3114  23113
```

SOFiSTiK AG - www.sofistik.de

Composite bridge 38+50+38, b=14.25m, 2x2HL1100R HISTAR460 , slab 0.30m C30/37

	Number	gpt-a	gpt-b	gpt-m	t[m]	Mat	Hinges
Outer	3113	23113	3113				
Outer	1018	3113	3116				
Outer	1017	3116	3112				
Outer	23112	3112	23112				
Outer	3111	23112	3111				
Outer	1016	3111	3115				
Outer	1015	3115	3110				

		x[m]	y[m]	z[m]	t[m]	w[-]
Surface-Geometry	flat	1.000	0.000	0.000		
		0.000	-1.000	0.000		
		0.000	0.000	-1.000		
		107.000	4.000	0.000		

Number	Grp	Mat	NoR	QUADtype	local-x	t[m]	Title / Support Conditions
3800	83	30	300	PlMeRn/DN	SURF	0.300	1100

	Number	gpt-a	gpt-b	gpt-m	t[m]	Mat	Hinges
Outer	3800	3810	3110				
Outer	1015	3110	3115				
Outer	1016	3115	3111				
Outer	3111	3111	23112				
Outer	23112	23112	3112				
Outer	1017	3112	3116				
Outer	1018	3116	3113				
Outer	3113	3113	23113				
Outer	23113	23113	3114				
Outer	1019	3114	3117				
Outer	1020	3117	4110				
Outer	4800	4110	4810				
Outer	3814	4810	3814				
Outer	3813	3814	3813				
Outer	3812	3813	3812				
Outer	3811	3812	3811				
Outer	3810	3811	3810				

		x[m]	y[m]	z[m]	t[m]	w[-]
Surface-Geometry	flat	1.000	0.000	0.000		
		0.000	-1.000	0.000		
		0.000	0.000	-1.000		
		107.000	-1.562	0.000		

Number	Grp	Mat	NoR	QUADtype	local-x	t[m]	Title / Support Conditions
3900	83	30	300	PlMeRn/DN	SURF	0.300	1100

	Number	gpt-a	gpt-b	gpt-m	t[m]	Mat	Hinges
Outer	3900	3210	3910				
Outer	3910	3910	3911				
Outer	3911	3911	3912				
Outer	3912	3912	3913				
Outer	3913	3913	3914				
Outer	3914	3914	4910				
Outer	4900	4910	4210				
Outer	3214	4210	3214				
Outer	23213	3214	23213				
Outer	3213	23213	3213				
Outer	3212	3213	3212				
Outer	23212	3212	23212				
Outer	3211	23212	3211				
Outer	3210	3211	3210				

		x[m]	y[m]	z[m]	t[m]	w[-]
Surface-Geometry	flat	1.000	0.000	0.000		
		0.000	-1.000	0.000		
		0.000	0.000	-1.000		
		107.000	9.562	0.000		

Number	Grp	Mat	NoR	QUADtype	local-x	t[m]	Title / Support Conditions
4010	34	50	500	PlMeRn	SURF	1.800	przycz.A

	Number	gpt-a	gpt-b	gpt-m	t[m]	Mat	Hinges
Outer	4806	4808	4807				
Outer	4807	4807	4107				
Outer	4107	4107	4207				
Outer	4907	4207	4907				

SOFiSTiK AG - www.sofistik.de

Composite bridge 38+50+38, b=14.25m, 2x2HL1100R HISTAR460 , slab 0.30m C30/37

	Number	gpt-a	gpt-b	gpt-m	t[m]	Mat	Hinges
Outer	4906	4907	4908				
Outer	4908	4908	4208				
Outer	4108	4208	4108				
Outer	4808	4108	4808				

		x[m]	y[m]	z[m]	t[m]	w[-]
Surface-Geometry	flat	0.000	1.000	0.000		
		0.000	0.000	-1.000		
		-1.000	0.000	0.000		
		126.000	4.000	7.775		

Number	Grp	Mat	NoR	QUADtype	local-x	t[m]	Title / Support Conditions
4011	34	50	500	PlMeRn	SURF	0.300	przycz.A

	Number	gpt-a	gpt-b	gpt-m	t[m]	Mat	Hinges
Outer	4008	4803	4903				
Outer	4903	4903	4904				
Outer	4010	4904	4804				
Outer	4803	4804	4803				

		x[m]	y[m]	z[m]	t[m]	w[-]
Surface-Geometry	flat	0.000	1.000	0.000		
		0.000	0.000	-1.000		
		-1.000	0.000	0.000		
		127.000	4.000	1.600		

Number	Grp	Mat	NoR	QUADtype	local-x	t[m]	Title / Support Conditions
4012	34	50	500	PlMeRn	SURF	0.300	przycz.A

	Number	gpt-a	gpt-b	gpt-m	t[m]	Mat	Hinges
Outer	4804	4803	4808				
Outer	4808	4808	4108				
Outer	4108	4108	4208				
Outer	4908	4208	4908				
Outer	4904	4908	4903				
Outer	4008	4903	4803				

		x[m]	y[m]	z[m]	t[m]	w[-]
Surface-Geometry	flat	1.000	0.000	0.000		
		0.000	-1.000	0.000		
		0.000	0.000	-1.000		
		126.500	4.000	3.550		

SOFiSTiK AG - www.sofistik.de

Composite bridge 38+50+38, b=14.25m, 2x2HL1100R HISTAR460 , slab 0.30m C30/37

Groups

Grp	number	type	min-no	max-no	Title
11	4	KINE	110001	110004	
	40	BEAM	110001	110040	
	44	base	110000	119999	
12	4	KINE	120001	120004	
	40	BEAM	120001	120040	
	44	base	120000	129999	
13	4	KINE	130001	130004	
	40	BEAM	130001	130040	
	44	base	130000	139999	
14	4	KINE	140001	140004	
	40	BEAM	140001	140040	
	44	base	140000	209999	
21	8	BEAM	210001	210008	
22	8	BEAM	220001	220008	
23	8	BEAM	230001	230008	
24	8	BEAM	240001	240008	
31	8	BOUN	310001	310003	
	96	QUAD	310001	310096	
	104	base	310000	319999	
32	18	BEAM	320001	320018	
	8	BOUN	320001	320003	
	26	base	320000	329999	
33	18	BEAM	330001	330018	
	8	BOUN	330001	330003	
	26	base	330000	339999	
34	8	BOUN	340001	340003	
	96	QUAD	340001	340096	
	104	base	340000	409999	
41	12	BEAM	410001	410012	
42	12	BEAM	420001	420012	
43	10	BEAM	430001	430010	
44	12	BEAM	440001	440012	
51	24	BEAM	510001	510024	
52	32	BEAM	520001	520032	
53	24	BEAM	530001	530024	
61	8	BEAM	610001	610008	
62	12	BEAM	620001	620012	
63	16	BEAM	630001	630016	
64	8	BEAM	640001	640008	
71	2	KINE	710001	710002	
	3	SPRI	710001	710003	
	5	base	710000	719999	
72	2	KINE	720001	720002	
	5	SPRI	720001	720005	
	7	base	720000	729999	
73	2	KINE	730001	730002	
	3	SPRI	730001	730003	
	5	base	730000	739999	
74	2	KINE	740001	740002	
	3	SPRI	740001	740003	
	5	base	740000	809999	
81	466	QUAD	810001	810466	
82	531	QUAD	820001	820531	
83	477	QUAD	830001	830477	
91	16	SPRI	910001	910016	
92	16	SPRI	920001	920016	
93	16	SPRI	930001	930016	
111	4	SPRI	1110001	1110004	
112	4	SPRI	1120001	1120004	
113	4	SPRI	1130001	1130004	
114	4	SPRI	1140001	1140004	
151	32	BEAM	1510001	1510032	
152	34	BEAM	1520001	1520034	
153	30	BEAM	1530001	1530030	
191	4	KINE	1910001	1910004	

SOFiSTiK AG - www.sofistik.de

Composite bridge 38+50+38, b=14.25m, 2x2HL1100R HISTAR460 , slab 0.30m C30/37

Groups

Grp	number	type	min-no	max-no	Title
192	4	KINE	1920001	1920004	
193	4	KINE	1930001	1930004	

Nodal Coordinates and Supports

Number	X[m]	Y[m]	Z[m]	Support Conditions
1010	0.000	11.125	0.000	
1011	0.500	11.125	0.000	
1012	9.500	11.125	0.000	
1013	25.500	11.125	0.000	
1014	37.500	11.125	0.000	
1107	0.000	0.000	12.000	
1108	0.000	0.000	3.550	
1109	0.000	0.000	3.050	
1110	0.000	0.000	0.000	
1111	0.900	0.000	0.000	
1112	9.500	0.000	0.000	
1113	25.500	0.000	0.000	
1114	37.100	0.000	0.000	
1115	0.700	0.000	0.000	
1116	19.000	0.000	0.000	
1117	37.300	0.000	0.000	
1126	-1.500	0.000	32.000	
1127	-1.500	0.000	12.000	
1136	1.500	0.000	32.000	
1137	1.500	0.000	12.000	
1207	0.000	8.000	12.000	
1208	0.000	8.000	3.550	
1209	0.000	8.000	3.050	
1210	0.000	8.000	0.000	
1211	0.900	8.000	0.000	
1212	9.500	8.000	0.000	
1213	25.500	8.000	0.000	
1214	37.100	8.000	0.000	
1226	-1.500	8.000	32.000	
1227	-1.500	8.000	12.000	
1236	1.500	8.000	32.000	
1237	1.500	8.000	12.000	
1803	-1.000	-3.125	3.550	
1804	-1.000	-3.125	-0.350	
1807	0.000	-3.125	12.000	
1808	0.000	-3.125	3.550	
1810	0.000	-3.125	0.000	
1811	0.500	-3.125	0.000	
1812	9.500	-3.125	0.000	
1813	25.500	-3.125	0.000	
1814	37.500	-3.125	0.000	
1903	-1.000	11.125	3.550	
1904	-1.000	11.125	-0.350	
1907	0.000	11.125	12.000	
1908	0.000	11.125	3.550	
1910	0.000	11.125	0.000	
1911	0.500	11.125	0.000	
1912	9.500	11.125	0.000	
1913	25.500	11.125	0.000	
1914	37.500	11.125	0.000	
2010	38.000	11.125	0.000	
2011	38.500	11.125	0.000	
2012	50.500	11.125	0.000	
2013	75.500	11.125	0.000	
2014	87.500	11.125	0.000	
2107	38.000	0.000	12.000	
2108	38.000	0.000	3.550	
2109	38.000	0.000	3.050	
2110	38.000	0.000	0.000	
2111	38.900	0.000	0.000	

SOFiSTiK AG - www.sofistik.de

Composite bridge 38+50+38, b=14.25m, 2x2HL1100R HISTAR460 , slab 0.30m C30/37

Nodal Coordinates and Supports

Number	X[m]	Y[m]	Z[m]	Support Conditions
2112	50.500	0.000	0.000	
2113	75.500	0.000	0.000	
2114	87.100	0.000	0.000	
2115	38.700	0.000	0.000	
2116	63.000	0.000	0.000	
2117	87.300	0.000	0.000	
2126	36.500	0.000	32.000	
2127	36.500	0.000	12.000	
2136	39.500	0.000	32.000	
2137	39.500	0.000	12.000	
2207	38.000	8.000	12.000	
2208	38.000	8.000	3.550	
2209	38.000	8.000	3.050	
2210	38.000	8.000	0.000	
2211	38.900	8.000	0.000	
2212	50.500	8.000	0.000	
2213	75.500	8.000	0.000	
2214	87.100	8.000	0.000	
2226	36.500	8.000	32.000	
2227	36.500	8.000	12.000	
2236	39.500	8.000	32.000	
2237	39.500	8.000	12.000	
2807	38.000	-3.125	12.000	
2808	38.000	-3.125	3.550	
2810	38.000	-3.125	0.000	
2811	38.500	-3.125	0.000	
2812	50.500	-3.125	0.000	
2813	75.500	-3.125	0.000	
2814	87.500	-3.125	0.000	
2907	38.000	11.125	12.000	
2908	38.000	11.125	3.550	
2910	38.000	11.125	0.000	
2911	38.500	11.125	0.000	
2912	50.500	11.125	0.000	
2913	75.500	11.125	0.000	
2914	87.500	11.125	0.000	
3010	88.000	11.125	0.000	
3011	88.500	11.125	0.000	
3012	100.500	11.125	0.000	
3013	116.500	11.125	0.000	
3014	125.500	11.125	0.000	
3107	88.000	0.000	12.000	
3108	88.000	0.000	3.550	
3109	88.000	0.000	3.050	
3110	88.000	0.000	0.000	
3111	88.900	0.000	0.000	
3112	100.500	0.000	0.000	
3113	116.500	0.000	0.000	
3114	125.100	0.000	0.000	
3115	88.700	0.000	0.000	
3116	107.000	0.000	0.000	
3117	125.300	0.000	0.000	
3126	86.500	0.000	32.000	
3127	86.500	0.000	12.000	
3136	89.500	0.000	32.000	
3137	89.500	0.000	12.000	
3207	88.000	8.000	12.000	
3208	88.000	8.000	3.550	
3209	88.000	8.000	3.050	
3210	88.000	8.000	0.000	
3211	88.900	8.000	0.000	
3212	100.500	8.000	0.000	
3213	116.500	8.000	0.000	
3214	125.100	8.000	0.000	
3226	86.500	8.000	32.000	

SOFiSTiK AG - www.sofistik.de

Composite bridge 38+50+38, b=14.25m, 2x2HL1100R HISTAR460 , slab 0.30m C30/37

Nodal Coordinates and Supports

Number	X[m]	Y[m]	Z[m]	Support Conditions
3227	86.500	8.000	12.000	
3236	89.500	8.000	32.000	
3237	89.500	8.000	12.000	
3807	88.000	-3.125	12.000	
3808	88.000	-3.125	3.550	
3810	88.000	-3.125	0.000	
3811	88.500	-3.125	0.000	
3812	100.500	-3.125	0.000	
3813	116.500	-3.125	0.000	
3814	125.500	-3.125	0.000	
3907	88.000	11.125	12.000	
3908	88.000	11.125	3.550	
3910	88.000	11.125	0.000	
3911	88.500	11.125	0.000	
3912	100.500	11.125	0.000	
3913	116.500	11.125	0.000	
3914	125.500	11.125	0.000	
4010	126.000	11.125	0.000	
4107	126.000	0.000	12.000	
4108	126.000	0.000	3.550	
4109	126.000	0.000	3.050	
4110	126.000	0.000	0.000	
4126	124.500	0.000	32.000	
4127	124.500	0.000	12.000	
4136	127.500	0.000	32.000	
4137	127.500	0.000	12.000	
4207	126.000	8.000	12.000	
4208	126.000	8.000	3.550	
4209	126.000	8.000	3.050	
4210	126.000	8.000	0.000	
4226	124.500	8.000	32.000	
4227	124.500	8.000	12.000	
4236	127.500	8.000	32.000	
4237	127.500	8.000	12.000	
4803	127.000	-3.125	3.550	
4804	127.000	-3.125	-0.350	
4807	126.000	-3.125	12.000	
4808	126.000	-3.125	3.550	
4810	126.000	-3.125	0.000	
4903	127.000	11.125	3.550	
4904	127.000	11.125	-0.350	
4907	126.000	11.125	12.000	
4908	126.000	11.125	3.550	
4910	126.000	11.125	0.000	
11111	0.900	0.000	1.200	
11114	37.100	0.000	1.200	
11211	0.900	8.000	1.200	
11214	37.100	8.000	1.200	
21012	5.700	8.000	0.000	
21013	30.500	8.000	0.000	
21112	5.700	0.000	0.000	
21113	30.500	0.000	0.000	
21212	5.700	8.000	0.000	
21213	30.500	8.000	0.000	
22012	45.500	8.000	0.000	
22013	80.500	8.000	0.000	
22111	38.900	0.000	1.200	
22112	45.500	0.000	0.000	
22113	80.500	0.000	0.000	
22114	87.100	0.000	1.200	
22211	38.900	8.000	1.200	
22212	45.500	8.000	0.000	
22213	80.500	8.000	0.000	
22214	87.100	8.000	1.200	
23012	95.500	8.000	0.000	

SOFiSTiK AG - www.sofistik.de

Composite bridge 38+50+38, b=14.25m, 2x2HL1100R HISTAR460 , slab 0.30m C30/37

Nodal Coordinates and Supports

Number	X[m]	Y[m]	Z[m]	Support Conditions
23013	120.300	8.000	0.000	
23112	95.500	0.000	0.000	
23113	120.300	0.000	0.000	
23212	95.500	8.000	0.000	
23213	120.300	8.000	0.000	
33111	88.900	0.000	1.200	
33114	125.100	0.000	1.200	
33211	88.900	8.000	1.200	
33214	125.100	8.000	1.200	
33215	0.420	0.000	0.000	
33216	14.250	0.000	0.000	
33217	22.250	0.000	0.000	
33218	-1.000	-1.650	3.550	
33219	-1.000	0.737	3.550	
33220	-1.000	4.000	3.550	
33221	-1.000	7.263	3.550	
33222	-1.000	9.650	3.550	
33223	-1.000	0.438	-0.350	
33224	-1.000	4.000	-0.350	
33225	-1.000	7.562	-0.350	
33226	54.667	0.000	0.000	
33227	58.833	0.000	0.000	
33228	67.167	0.000	0.000	
33229	71.333	0.000	0.000	
33230	87.569	0.000	0.000	
33231	88.431	0.000	0.000	
33232	103.750	0.000	0.000	
33233	111.750	0.000	0.000	
33234	125.580	0.000	0.000	
33235	0.000	0.667	0.000	
33236	0.000	1.507	0.000	
33237	0.000	2.735	0.000	
33238	0.000	4.586	0.000	
33239	0.000	6.607	0.000	
33240	0.000	4.000	12.000	
33241	0.000	4.000	3.550	
33242	1.224	0.000	0.000	
33243	1.734	0.000	0.000	
33244	2.536	0.000	0.000	
33245	3.854	0.000	0.000	
33254	2.743	8.000	0.000	
33255	13.500	8.000	0.000	
33256	17.500	8.000	0.000	
33257	21.500	8.000	0.000	
33266	0.000	-2.064	0.000	
33267	0.000	-0.866	0.000	
33268	-1.000	-3.125	2.092	
33269	0.000	-3.125	8.184	
33270	0.000	-3.125	5.334	
33271	1.465	-3.125	0.000	
33272	2.992	-3.125	0.000	
33273	5.609	-3.125	0.000	
33274	13.500	-3.125	0.000	
33275	17.500	-3.125	0.000	
33276	21.500	-3.125	0.000	
33277	29.311	-3.125	0.000	
33278	32.885	-3.125	0.000	
33279	35.209	-3.125	0.000	
33280	36.609	-3.125	0.000	
33281	0.000	9.783	0.000	
33282	-1.000	11.125	2.092	
33283	0.000	11.125	8.184	
33284	0.000	11.125	5.334	
33285	1.473	11.125	0.000	
33286	3.011	11.125	0.000	

SOFiSTiK AG - www.sofistik.de

Composite bridge 38+50+38, b=14.25m, 2x2HL1100R HISTAR460 , slab 0.30m C30/37

Nodal Coordinates and Supports

Number	X[m]	Y[m]	Z[m]	Support Conditions
33287	5.623	11.125	0.000	
33288	13.500	11.125	0.000	
33289	17.500	11.125	0.000	
33290	21.500	11.125	0.000	
33291	29.338	11.125	0.000	
33292	32.898	11.125	0.000	
33293	35.186	11.125	0.000	
33294	36.601	11.125	0.000	
33295	38.000	0.667	0.000	
33296	38.000	1.508	0.000	
33297	38.000	2.740	0.000	
33298	38.000	4.599	0.000	
33299	38.000	6.614	0.000	
33303	39.204	0.000	0.000	
33304	39.664	0.000	0.000	
33305	40.360	0.000	0.000	
33306	41.492	0.000	0.000	
33307	43.051	0.000	0.000	
33317	41.276	8.000	0.000	
33318	54.667	8.000	0.000	
33319	58.833	8.000	0.000	
33320	63.000	8.000	0.000	
33321	67.167	8.000	0.000	
33322	71.333	8.000	0.000	
33331	38.000	-2.053	0.000	
33332	38.000	-0.848	0.000	
33333	39.205	-3.125	0.000	
33334	40.214	-3.125	0.000	
33335	42.268	-3.125	0.000	
33336	46.095	-3.125	0.000	
33337	54.667	-3.125	0.000	
33338	58.833	-3.125	0.000	
33339	63.000	-3.125	0.000	
33340	67.167	-3.125	0.000	
33341	71.333	-3.125	0.000	
33342	79.311	-3.125	0.000	
33343	82.885	-3.125	0.000	
33344	85.209	-3.125	0.000	
33345	86.609	-3.125	0.000	
33346	38.000	9.785	0.000	
33347	39.204	11.125	0.000	
33348	40.266	11.125	0.000	
33349	41.825	11.125	0.000	
33350	44.177	11.125	0.000	
33351	47.301	11.125	0.000	
33352	54.667	11.125	0.000	
33353	58.833	11.125	0.000	
33354	63.000	11.125	0.000	
33355	67.167	11.125	0.000	
33356	71.333	11.125	0.000	
33357	79.338	11.125	0.000	
33358	82.898	11.125	0.000	
33359	85.186	11.125	0.000	
33360	86.601	11.125	0.000	
33361	88.000	0.821	0.000	
33362	88.000	1.926	0.000	
33363	88.000	3.735	0.000	
33364	88.000	6.191	0.000	
33368	89.204	0.000	0.000	
33369	89.664	0.000	0.000	
33370	90.360	0.000	0.000	
33371	91.492	0.000	0.000	
33372	93.051	0.000	0.000	
33382	91.276	8.000	0.000	
33383	104.500	8.000	0.000	

SOFiSTiK AG - www.sofistik.de

Composite bridge 38+50+38, b=14.25m, 2x2HL1100R HISTAR460 , slab 0.30m C30/37

Nodal Coordinates and Supports

Number	X[m]	Y[m]	Z[m]	Support Conditions
33384	108.500	8.000	0.000	
33385	112.500	8.000	0.000	
33394	88.000	-2.088	0.000	
33395	88.000	-0.897	0.000	
33396	89.204	-3.125	0.000	
33397	90.266	-3.125	0.000	
33398	91.825	-3.125	0.000	
33399	94.177	-3.125	0.000	
33400	97.301	-3.125	0.000	
33401	104.500	-3.125	0.000	
33402	108.500	-3.125	0.000	
33403	112.500	-3.125	0.000	
33404	120.377	-3.125	0.000	
33405	122.989	-3.125	0.000	
33406	124.527	-3.125	0.000	
33407	88.000	9.216	0.000	
33408	88.000	10.362	0.000	
33409	89.204	11.125	0.000	
33410	90.266	11.125	0.000	
33411	91.825	11.125	0.000	
33412	94.177	11.125	0.000	
33413	97.301	11.125	0.000	
33414	104.500	11.125	0.000	
33415	108.500	11.125	0.000	
33416	112.500	11.125	0.000	
33417	120.377	11.125	0.000	
33418	122.989	11.125	0.000	
33419	124.527	11.125	0.000	
33420	127.000	-1.650	3.550	
33421	127.000	0.737	3.550	
33422	127.000	4.000	3.550	
33423	127.000	7.263	3.550	
33424	127.000	9.650	3.550	
33425	127.000	0.438	-0.350	
33426	127.000	4.000	-0.350	
33427	127.000	7.562	-0.350	
33428	126.000	0.656	0.000	
33429	126.000	1.474	0.000	
33430	126.000	2.667	0.000	
33431	126.000	4.461	0.000	
33432	126.000	6.554	0.000	
33433	126.000	4.000	12.000	
33434	126.000	4.000	3.550	
33451	126.000	-2.054	0.000	
33452	126.000	-0.847	0.000	
33453	127.000	-3.125	2.092	
33454	126.000	-3.125	8.184	
33455	126.000	-3.125	5.334	
33456	126.000	9.785	0.000	
33457	127.000	11.125	2.092	
33458	126.000	11.125	8.184	
33459	126.000	11.125	5.334	
33460	32.949	0.000	0.000	
33461	34.508	0.000	0.000	
33462	35.640	0.000	0.000	
33463	36.336	0.000	0.000	
33464	36.796	0.000	0.000	
33465	33.531	8.000	0.000	
33466	35.698	8.000	0.000	
33467	82.949	0.000	0.000	
33468	84.508	0.000	0.000	
33469	85.640	0.000	0.000	
33470	86.336	0.000	0.000	
33471	86.796	0.000	0.000	
33472	83.531	8.000	0.000	

SOFiSTiK AG - www.sofistik.de

Composite bridge 38+50+38, b=14.25m, 2x2HL1100R HISTAR460 , slab 0.30m C30/37

Nodal Coordinates and Supports

Number	X[m]	Y[m]	Z[m]	Support Conditions
33473	85.698	8.000	0.000	
33474	122.146	0.000	0.000	
33475	123.464	0.000	0.000	
33476	124.266	0.000	0.000	
33477	124.776	0.000	0.000	
33478	123.257	8.000	0.000	
33479	0.000	1.839	6.212	
33480	0.000	6.386	8.814	
33481	0.000	0.581	9.110	
33482	0.000	7.484	5.625	
33483	-1.000	-1.430	1.917	
33484	32.319	5.368	0.000	
33485	34.765	2.666	0.000	
33486	35.785	1.476	0.000	
33487	36.609	0.970	0.000	
33488	36.883	0.420	0.000	
33489	37.110	0.365	0.000	
33490	35.560	5.603	0.000	
33491	37.370	0.660	0.000	
33492	36.862	2.473	0.000	
33493	24.385	5.019	0.000	
33494	19.983	3.576	0.000	
33495	31.446	2.279	0.000	
33496	23.275	2.559	0.000	
33497	27.626	3.162	0.000	
33498	28.966	5.900	0.000	
33499	1.705	6.397	0.000	
33500	2.673	4.286	0.000	
33501	4.695	2.073	0.000	
33502	7.797	4.073	0.000	
33503	4.922	5.373	0.000	
33504	3.492	6.783	0.000	
33505	15.784	3.964	0.000	
33506	11.890	4.208	0.000	
33507	1.562	2.637	0.000	
33508	1.073	1.684	0.000	
33509	0.907	0.675	0.000	
33510	0.610	0.308	0.000	
33511	1.639	0.927	0.000	
33512	2.911	1.177	0.000	
33513	37.136	-0.328	0.000	
33514	37.226	-0.860	0.000	
33515	37.367	-1.273	0.000	
33516	37.190	-2.253	0.000	
33517	37.443	-0.477	0.000	
33518	36.119	-1.381	0.000	
33519	36.822	-0.664	0.000	
33520	0.674	-2.493	0.000	
33521	0.714	-1.485	0.000	
33522	0.663	-0.554	0.000	
33523	0.917	-0.260	0.000	
33524	3.939	-1.603	0.000	
33525	1.331	-0.424	0.000	
33526	1.225	-0.943	0.000	
33527	1.489	-2.045	0.000	
33528	1.887	-0.459	0.000	
33529	1.951	-1.109	0.000	
33530	2.436	-2.171	0.000	
33531	2.799	-1.189	0.000	
33532	1.595	9.608	0.000	
33533	0.927	10.435	0.000	
33534	3.604	9.608	0.000	
33535	36.850	9.943	0.000	
33536	82.523	5.545	0.000	
33537	84.302	2.567	0.000	

SOFiSTiK AG - www.sofistik.de

Composite bridge 38+50+38, b=14.25m, 2x2HL1100R HISTAR460 , slab 0.30m C30/37

Nodal Coordinates and Supports

Number	X[m]	Y[m]	Z[m]	Support Conditions
33538	85.706	1.826	0.000	
33539	86.604	1.155	0.000	
33540	86.962	0.509	0.000	
33541	87.212	0.224	0.000	
33542	85.699	5.616	0.000	
33543	87.422	0.753	0.000	
33544	87.551	0.339	0.000	
33545	87.085	2.234	0.000	
33546	87.300	1.240	0.000	
33547	86.515	3.354	0.000	
33548	77.133	4.188	0.000	
33549	81.432	2.597	0.000	
33550	39.586	0.470	0.000	
33551	39.183	1.365	0.000	
33552	39.349	2.516	0.000	
33553	39.406	4.220	0.000	
33554	39.397	6.232	0.000	
33555	38.853	0.588	0.000	
33556	38.602	0.173	0.000	
33557	46.491	3.496	0.000	
33558	41.316	5.807	0.000	
33559	41.079	3.697	0.000	
33560	40.888	1.750	0.000	
33561	40.120	0.829	0.000	
33562	43.251	5.565	0.000	
33563	43.136	2.672	0.000	
33564	60.070	3.963	0.000	
33565	51.050	4.127	0.000	
33566	66.641	3.834	0.000	
33567	71.628	4.144	0.000	
33568	87.256	-0.340	0.000	
33569	87.398	-0.863	0.000	
33570	87.371	-1.447	0.000	
33571	87.151	-2.308	0.000	
33572	87.539	-0.588	0.000	
33573	87.577	-0.308	0.000	
33574	86.116	-1.389	0.000	
33575	86.836	-0.691	0.000	
33576	38.743	-2.407	0.000	
33577	38.588	-1.509	0.000	
33578	38.663	-0.879	0.000	
33579	38.715	-0.286	0.000	
33580	39.331	-2.490	0.000	
33581	39.139	-1.718	0.000	
33582	39.243	-1.045	0.000	
33583	39.251	-0.459	0.000	
33584	39.750	-0.581	0.000	
33585	39.835	-1.201	0.000	
33586	40.055	-2.015	0.000	
33587	41.498	-1.502	0.000	
33588	43.293	-1.334	0.000	
33589	40.323	-0.872	0.000	
33590	87.076	10.216	0.000	
33591	87.105	9.081	0.000	
33592	39.179	9.863	0.000	
33593	40.947	9.580	0.000	
33594	43.022	9.838	0.000	
33595	85.693	9.492	0.000	
33596	122.573	5.584	0.000	
33597	123.638	3.600	0.000	
33598	123.807	2.260	0.000	
33599	124.444	1.101	0.000	
33600	124.841	0.424	0.000	
33601	125.223	0.317	0.000	
33602	124.659	6.217	0.000	

SOFiSTiK AG - www.sofistik.de

Composite bridge 38+50+38, b=14.25m, 2x2HL1100R HISTAR460 , slab 0.30m C30/37

Nodal Coordinates and Supports

Number	X[m]	Y[m]	Z[m]	Support Conditions
33603	125.448	0.810	0.000	
33604	125.588	0.281	0.000	
33605	124.793	2.517	0.000	
33606	119.636	3.884	0.000	
33607	122.456	1.926	0.000	
33608	91.135	0.989	0.000	
33609	89.979	2.662	0.000	
33610	89.911	4.552	0.000	
33611	89.564	6.526	0.000	
33612	89.898	1.310	0.000	
33613	89.731	0.451	0.000	
33614	89.099	0.358	0.000	
33615	88.868	1.013	0.000	
33616	88.575	0.433	0.000	
33617	96.198	3.496	0.000	
33618	92.300	5.286	0.000	
33619	92.713	2.465	0.000	
33620	107.034	4.008	0.000	
33621	99.774	4.185	0.000	
33622	103.329	4.065	0.000	
33623	111.341	3.988	0.000	
33624	115.485	3.965	0.000	
33625	125.146	-0.319	0.000	
33626	125.132	-0.871	0.000	
33627	125.233	-1.498	0.000	
33628	125.294	-2.454	0.000	
33629	125.444	-0.574	0.000	
33630	125.553	-0.299	0.000	
33631	122.627	-1.505	0.000	
33632	124.342	-1.929	0.000	
33633	124.093	-0.838	0.000	
33634	124.607	-0.300	0.000	
33635	88.827	-2.460	0.000	
33636	88.723	-1.518	0.000	
33637	88.650	-0.665	0.000	
33638	88.890	-0.236	0.000	
33639	89.269	-0.486	0.000	
33640	89.503	-1.200	0.000	
33641	89.878	-2.082	0.000	
33642	91.171	-1.516	0.000	
33643	92.989	-1.568	0.000	
33644	90.161	-0.872	0.000	
33645	89.813	-0.373	0.000	
33646	88.959	9.707	0.000	
33647	90.786	9.649	0.000	
33648	93.000	9.857	0.000	
33649	125.248	10.502	0.000	
33650	124.660	9.543	0.000	
33651	126.000	1.839	6.212	
33652	126.000	6.386	8.814	
33653	126.000	0.581	9.110	
33654	126.000	7.484	5.625	
33655	127.000	-1.430	1.917	
33656	0.000	-0.767	5.809	
33657	0.000	-3.125	6.759	
33658	0.000	-1.244	8.601	
33659	0.000	1.261	7.730	
33660	0.000	-0.896	7.108	
33661	0.000	0.804	4.679	
33662	0.000	-1.562	3.550	
33663	0.000	-3.125	4.442	
33664	0.000	-1.054	4.662	
33665	0.000	-1.562	12.000	
33666	0.000	0.167	10.505	
33667	0.000	-3.125	10.092	

SOFiSTiK AG - www.sofistik.de

Composite bridge 38+50+38, b=14.25m, 2x2HL1100R HISTAR460 , slab 0.30m C30/37

Nodal Coordinates and Supports

Number	X[m]	Y[m]	Z[m]	Support Conditions
33668	0.000	-1.456	10.242	
33669	0.000	2.280	10.213	
33670	0.000	4.925	10.244	
33671	0.000	4.153	7.591	
33672	0.000	3.219	8.982	
33673	0.000	9.562	3.550	
33674	0.000	7.847	4.552	
33675	0.000	9.265	5.644	
33676	0.000	11.125	4.442	
33677	0.000	9.437	4.547	
33678	0.000	3.253	5.085	
33679	0.000	6.927	7.065	
33680	0.000	5.793	4.932	
33681	0.000	4.977	6.182	
33682	0.000	11.125	10.092	
33683	0.000	8.907	8.599	
33684	0.000	7.331	10.552	
33685	0.000	9.562	12.000	
33686	0.000	9.164	10.246	
33687	0.000	11.125	6.759	
33688	0.000	8.991	7.084	
33689	0.000	6.016	12.000	
33690	0.000	6.056	11.009	
33691	0.000	1.626	12.000	
33692	0.000	1.501	10.942	
33693	0.000	2.145	3.550	
33694	0.000	2.070	4.375	
33695	0.000	6.556	3.550	
33696	0.000	6.533	4.277	
33697	-1.000	5.632	3.550	
33698	-1.000	7.179	1.771	
33699	-1.000	5.781	-0.350	
33700	-1.000	3.993	1.603	
33701	-1.000	5.684	1.613	
33702	-1.000	0.776	1.782	
33703	-1.000	2.368	3.550	
33704	-1.000	2.219	-0.350	
33705	-1.000	2.301	1.627	
33706	-1.000	-2.387	3.550	
33707	-1.000	-1.422	2.645	
33708	-1.000	-2.179	1.905	
33709	-1.000	-3.125	2.821	
33710	-1.000	-2.298	2.758	
33711	-1.000	-0.712	1.109	
33712	-1.000	-1.344	-0.350	
33713	-1.000	-3.125	0.871	
33714	-1.000	-1.786	0.809	
33715	-1.000	9.344	-0.350	
33716	-1.000	8.737	1.675	
33717	-1.000	10.312	2.464	
33718	-1.000	11.125	0.871	
33719	-1.000	9.791	1.203	
33720	-1.000	-0.457	3.550	
33721	-1.000	-0.386	2.196	
33722	-1.000	8.383	3.550	
33723	-1.000	8.145	2.194	
33724	-1.000	11.125	2.944	
33725	-1.000	10.516	3.550	
33726	-1.000	10.637	3.009	
33727	-0.473	4.089	3.550	
33728	-0.566	0.728	3.550	
33729	-0.489	2.224	3.550	
33730	-0.576	7.327	3.550	
33731	-0.487	5.890	3.550	
33732	-0.500	11.125	3.550	

SOFiSTiK AG - www.sofistik.de

Composite bridge 38+50+38, b=14.25m, 2x2HL1100R HISTAR460 , slab 0.30m C30/37

Nodal Coordinates and Supports

Number	X[m]	Y[m]	Z[m]	Support Conditions
33733	-0.570	9.019	3.550	
33734	-0.455	9.978	3.550	
33735	-0.573	-0.996	3.550	
33736	-0.500	-3.125	3.550	
33737	-0.463	-1.963	3.550	
33738	-0.713	-0.332	3.550	
33739	-0.712	8.321	3.550	
33740	0.542	1.056	0.000	
33741	0.733	0.508	0.000	
33742	0.314	0.518	0.000	
33743	0.000	1.087	0.000	
33744	0.394	0.800	0.000	
33745	0.617	1.632	0.000	
33746	1.350	1.342	0.000	
33747	1.240	0.798	0.000	
33748	0.904	1.197	0.000	
33749	2.064	3.381	0.000	
33750	0.768	2.836	0.000	
33751	0.000	3.660	0.000	
33752	1.183	4.517	0.000	
33753	1.013	3.651	0.000	
33754	0.000	5.596	0.000	
33755	0.857	6.410	0.000	
33756	2.153	5.457	0.000	
33757	1.069	5.471	0.000	
33758	38.000	0.334	0.000	
33759	37.650	0.000	0.000	
33760	37.407	0.285	0.000	
33761	37.706	0.640	0.000	
33762	37.676	0.308	0.000	
33763	0.450	8.000	0.000	
33764	1.335	7.224	0.000	
33765	0.000	7.303	0.000	
33766	0.657	7.225	0.000	
33767	28.271	4.554	0.000	
33768	30.615	5.550	0.000	
33769	31.852	3.885	0.000	
33770	29.446	2.631	0.000	
33771	30.043	4.077	0.000	
33772	36.779	5.013	0.000	
33773	37.221	3.550	0.000	
33774	35.931	2.845	0.000	
33775	35.069	4.163	0.000	
33776	36.307	3.937	0.000	
33777	5.539	6.537	0.000	
33778	7.600	8.000	0.000	
33779	8.720	6.123	0.000	
33780	6.141	4.778	0.000	
33781	6.973	6.302	0.000	
33782	1.119	0.328	0.000	
33783	1.753	0.459	0.000	
33784	1.479	0.000	0.000	
33785	1.407	0.397	0.000	
33786	25.928	4.024	0.000	
33787	25.026	6.346	0.000	
33788	27.344	6.657	0.000	
33789	26.563	5.429	0.000	
33790	3.770	3.153	0.000	
33791	3.724	1.604	0.000	
33792	2.277	2.018	0.000	
33793	2.921	2.556	0.000	
33794	37.028	0.914	0.000	
33795	36.759	1.625	0.000	
33796	37.441	1.925	0.000	
33797	37.609	1.118	0.000	

SOFiSTiK AG - www.sofistik.de

Composite bridge 38+50+38, b=14.25m, 2x2HL1100R HISTAR460 , slab 0.30m C30/37

Nodal Coordinates and Supports

Number	X[m]	Y[m]	Z[m]	Support Conditions
33798	37.214	1.408	0.000	
33799	1.237	2.094	0.000	
33800	0.000	2.121	0.000	
33801	0.612	2.184	0.000	
33802	2.169	1.056	0.000	
33803	2.704	0.504	0.000	
33804	2.135	0.000	0.000	
33805	2.208	0.510	0.000	
33806	36.399	8.000	0.000	
33807	37.341	7.323	0.000	
33808	36.844	6.278	0.000	
33809	35.517	6.878	0.000	
33810	36.580	7.091	0.000	
33811	33.930	5.488	0.000	
33812	32.861	6.701	0.000	
33813	34.614	8.000	0.000	
33814	34.272	6.766	0.000	
33815	20.664	5.559	0.000	
33816	17.980	3.832	0.000	
33817	16.640	5.965	0.000	
33818	19.500	8.000	0.000	
33819	18.744	5.862	0.000	
33820	19.397	1.783	0.000	
33821	21.780	3.152	0.000	
33822	22.695	1.258	0.000	
33823	20.625	0.000	0.000	
33824	21.220	1.576	0.000	
33825	14.998	1.986	0.000	
33826	16.625	0.000	0.000	
33827	17.288	1.911	0.000	
33828	7.600	0.000	0.000	
33829	5.391	1.038	0.000	
33830	5.997	2.817	0.000	
33831	8.514	2.115	0.000	
33832	6.891	1.482	0.000	
33833	36.948	0.000	0.000	
33834	36.804	0.225	0.000	
33835	36.981	0.322	0.000	
33836	37.102	0.164	0.000	
33837	36.960	0.172	0.000	
33838	35.988	0.000	0.000	
33839	35.633	0.779	0.000	
33840	36.181	1.215	0.000	
33841	36.389	0.480	0.000	
33842	36.044	0.631	0.000	
33843	33.729	0.000	0.000	
33844	32.308	1.086	0.000	
33845	33.292	2.608	0.000	
33846	34.465	1.292	0.000	
33847	33.433	1.313	0.000	
33848	0.000	0.333	0.000	
33849	0.479	0.157	0.000	
33850	0.210	0.000	0.000	
33851	0.258	0.254	0.000	
33852	11.875	0.000	0.000	
33853	10.922	2.277	0.000	
33854	13.701	4.053	0.000	
33855	12.768	2.036	0.000	
33856	1.822	8.000	0.000	
33857	3.074	7.422	0.000	
33858	2.592	6.557	0.000	
33859	2.160	7.313	0.000	
33860	3.898	4.733	0.000	
33861	4.080	6.016	0.000	
33862	3.164	5.651	0.000	

SOFiSTiK AG - www.sofistik.de

Composite bridge 38+50+38, b=14.25m, 2x2HL1100R HISTAR460 , slab 0.30m C30/37

Nodal Coordinates and Supports

Number	X[m]	Y[m]	Z[m]	Support Conditions
33863	12.652	6.069	0.000	
33864	15.500	8.000	0.000	
33865	14.591	6.018	0.000	
33866	4.777	0.000	0.000	
33867	3.548	0.558	0.000	
33868	4.293	0.775	0.000	
33869	35.074	0.000	0.000	
33870	35.336	1.954	0.000	
33871	35.111	1.061	0.000	
33872	11.500	8.000	0.000	
33873	9.959	4.214	0.000	
33874	10.623	6.047	0.000	
33875	30.528	1.031	0.000	
33876	28.000	0.000	0.000	
33877	26.761	1.717	0.000	
33878	28.666	1.259	0.000	
33879	29.702	6.997	0.000	
33880	32.015	8.000	0.000	
33881	31.302	6.802	0.000	
33882	36.566	0.000	0.000	
33883	36.745	0.612	0.000	
33884	36.617	0.342	0.000	
33885	22.953	6.217	0.000	
33886	23.837	3.832	0.000	
33887	22.326	4.821	0.000	
33888	37.200	0.000	0.000	
33889	37.234	0.388	0.000	
33890	37.241	0.224	0.000	
33891	0.826	0.147	0.000	
33892	1.062	0.000	0.000	
33893	0.940	0.240	0.000	
33894	24.539	1.561	0.000	
33895	25.277	2.677	0.000	
33896	4.908	3.803	0.000	
33897	1.793	1.633	0.000	
33898	33.550	4.042	0.000	
33899	37.076	0.536	0.000	
33900	38.000	0.959	0.000	
33901	37.785	0.929	0.000	
33902	36.950	0.678	0.000	
33903	36.202	2.006	0.000	
33904	36.403	1.667	0.000	
33905	38.000	2.195	0.000	
33906	37.521	2.671	0.000	
33907	37.636	2.231	0.000	
33908	38.000	5.681	0.000	
33909	37.200	5.687	0.000	
33910	38.000	7.511	0.000	
33911	37.589	8.000	0.000	
33912	37.676	7.554	0.000	
33913	38.000	3.330	0.000	
33914	37.603	3.262	0.000	
33915	35.812	2.320	0.000	
33916	23.892	0.000	0.000	
33917	23.785	0.888	0.000	
33918	28.343	8.000	0.000	
33919	28.281	7.337	0.000	
33920	31.655	0.000	0.000	
33921	31.591	0.719	0.000	
33922	23.672	8.000	0.000	
33923	23.765	6.969	0.000	
33924	3.885	8.000	0.000	
33925	4.455	7.215	0.000	
33926	3.937	7.611	0.000	
33927	4.714	6.602	0.000	

SOFiSTiK AG - www.sofistik.de

Composite bridge 38+50+38, b=14.25m, 2x2HL1100R HISTAR460 , slab 0.30m C30/37

Nodal Coordinates and Supports

Number	X[m]	Y[m]	Z[m]	Support Conditions
33928	9.696	2.740	0.000	
33929	0.688	0.101	0.000	
33930	0.787	0.000	0.000	
33931	0.766	0.089	0.000	
33932	3.121	0.000	0.000	
33933	3.114	0.359	0.000	
33934	0.596	0.000	0.000	
33935	0.595	0.086	0.000	
33936	9.573	-1.542	0.000	
33937	7.554	-3.125	0.000	
33938	6.038	-1.417	0.000	
33939	7.583	-1.551	0.000	
33940	25.641	-1.549	0.000	
33941	23.500	-3.125	0.000	
33942	21.861	-1.598	0.000	
33943	23.688	-1.598	0.000	
33944	13.889	-1.528	0.000	
33945	11.500	-3.125	0.000	
33946	11.692	-1.529	0.000	
33947	34.687	-1.404	0.000	
33948	34.047	-3.125	0.000	
33949	32.740	-1.604	0.000	
33950	33.890	-1.571	0.000	
33951	29.650	-1.576	0.000	
33952	27.406	-3.125	0.000	
33953	27.712	-1.504	0.000	
33954	31.098	-3.125	0.000	
33955	31.359	-1.620	0.000	
33956	0.513	-0.285	0.000	
33957	0.398	-0.705	0.000	
33958	0.000	-0.433	0.000	
33959	0.273	-0.366	0.000	
33960	37.389	-2.727	0.000	
33961	37.661	-2.158	0.000	
33962	38.000	-2.589	0.000	
33963	37.750	-3.125	0.000	
33964	37.706	-2.651	0.000	
33965	0.250	-3.125	0.000	
33966	0.000	-2.595	0.000	
33967	0.412	-2.320	0.000	
33968	0.621	-2.771	0.000	
33969	0.288	-2.695	0.000	
33970	18.123	-1.567	0.000	
33971	19.500	-3.125	0.000	
33972	20.037	-1.596	0.000	
33973	15.500	-3.125	0.000	
33974	16.079	-1.529	0.000	
33975	3.347	-1.349	0.000	
33976	3.575	-2.332	0.000	
33977	2.673	-2.542	0.000	
33978	2.641	-1.746	0.000	
33979	3.089	-2.020	0.000	
33980	1.812	-0.217	0.000	
33981	1.597	-0.459	0.000	
33982	1.300	-0.206	0.000	
33983	1.542	-0.221	0.000	
33984	1.107	-0.350	0.000	
33985	0.937	-0.127	0.000	
33986	1.102	-0.169	0.000	
33987	2.209	-0.326	0.000	
33988	2.762	-0.612	0.000	
33989	2.373	-1.126	0.000	
33990	1.965	-0.750	0.000	
33991	2.351	-0.667	0.000	
33992	36.499	-0.349	0.000	

SOFiSTiK AG - www.sofistik.de

Composite bridge 38+50+38, b=14.25m, 2x2HL1100R HISTAR460 , slab 0.30m C30/37

Nodal Coordinates and Supports

Number	X[m]	Y[m]	Z[m]	Support Conditions
33993	36.479	-1.004	0.000	
33994	35.795	-0.741	0.000	
33995	36.199	-0.518	0.000	
33996	0.404	-1.764	0.000	
33997	1.058	-1.728	0.000	
33998	0.993	-2.310	0.000	
33999	0.707	-2.021	0.000	
34000	1.311	-0.676	0.000	
34001	0.924	-0.772	0.000	
34002	0.817	-0.407	0.000	
34003	1.048	-0.559	0.000	
34004	37.115	-0.182	0.000	
34005	37.021	-0.436	0.000	
34006	36.798	-0.269	0.000	
34007	36.963	-0.232	0.000	
34008	1.591	-1.044	0.000	
34009	1.633	-0.736	0.000	
34010	37.365	-0.664	0.000	
34011	37.091	-0.705	0.000	
34012	37.267	-0.382	0.000	
34013	37.183	-0.551	0.000	
34014	35.695	-2.014	0.000	
34015	36.628	-1.869	0.000	
34016	36.818	-2.699	0.000	
34017	35.909	-3.125	0.000	
34018	36.272	-2.442	0.000	
34019	38.000	-0.424	0.000	
34020	37.683	-0.634	0.000	
34021	37.430	-0.238	0.000	
34022	37.695	-0.312	0.000	
34023	1.524	-2.618	0.000	
34024	0.983	-3.125	0.000	
34025	1.039	-2.696	0.000	
34026	2.038	-2.128	0.000	
34027	1.771	-1.528	0.000	
34028	2.200	-1.616	0.000	
34029	37.660	-1.170	0.000	
34030	37.381	-1.012	0.000	
34031	37.543	-0.875	0.000	
34032	1.000	-1.214	0.000	
34033	0.389	-1.217	0.000	
34034	0.662	-0.985	0.000	
34035	37.258	-0.198	0.000	
34036	4.696	-2.127	0.000	
34037	4.013	-0.829	0.000	
34038	4.867	-1.162	0.000	
34039	37.086	-1.071	0.000	
34040	37.318	-1.716	0.000	
34041	36.895	-1.442	0.000	
34042	3.315	-0.659	0.000	
34043	0.784	-0.137	0.000	
34044	0.675	-0.210	0.000	
34045	2.229	-3.125	0.000	
34046	2.093	-2.633	0.000	
34047	35.305	-1.122	0.000	
34048	1.369	-1.387	0.000	
34049	38.000	-1.450	0.000	
34050	37.677	-1.650	0.000	
34051	36.639	-0.224	0.000	
34052	37.146	-3.125	0.000	
34053	37.130	-2.863	0.000	
34054	0.000	-1.485	0.000	
34055	0.216	-1.483	0.000	
34056	0.834	-0.087	0.000	
34057	4.223	-3.125	0.000	

SOFiSTiK AG - www.sofistik.de

Composite bridge 38+50+38, b=14.25m, 2x2HL1100R HISTAR460 , slab 0.30m C30/37

Nodal Coordinates and Supports

Number	X[m]	Y[m]	Z[m]	Support Conditions
34058	4.200	-2.610	0.000	
34059	2.065	-0.162	0.000	
34060	0.403	10.511	0.000	
34061	0.986	11.125	0.000	
34062	1.609	10.378	0.000	
34063	0.823	9.672	0.000	
34064	17.501	9.562	0.000	
34065	13.501	9.563	0.000	
34066	15.500	11.125	0.000	
34067	15.500	9.562	0.000	
34068	9.521	9.572	0.000	
34069	11.500	11.125	0.000	
34070	11.504	9.564	0.000	
34071	21.525	9.553	0.000	
34072	23.500	11.125	0.000	
34073	25.652	9.516	0.000	
34074	23.545	9.557	0.000	
34075	19.500	11.125	0.000	
34076	19.504	9.561	0.000	
34077	6.075	9.595	0.000	
34078	7.562	11.125	0.000	
34079	7.601	9.586	0.000	
34080	36.895	8.998	0.000	
34081	37.450	9.767	0.000	
34082	38.000	8.892	0.000	
34083	37.469	8.928	0.000	
34084	27.419	11.125	0.000	
34085	29.764	9.563	0.000	
34086	27.781	9.504	0.000	
34087	34.042	11.125	0.000	
34088	35.315	9.436	0.000	
34089	33.039	9.573	0.000	
34090	34.329	9.544	0.000	
34091	0.000	8.891	0.000	
34092	1.350	8.817	0.000	
34093	0.656	8.870	0.000	
34094	38.000	10.455	0.000	
34095	37.207	10.560	0.000	
34096	37.750	11.125	0.000	
34097	37.572	10.465	0.000	
34098	31.118	11.125	0.000	
34099	31.536	9.586	0.000	
34100	2.518	9.599	0.000	
34101	2.242	11.125	0.000	
34102	3.319	10.436	0.000	
34103	2.458	10.371	0.000	
34104	36.104	10.235	0.000	
34105	36.166	9.240	0.000	
34106	3.157	8.742	0.000	
34107	2.246	8.801	0.000	
34108	0.250	11.125	0.000	
34109	0.000	10.454	0.000	
34110	0.187	10.654	0.000	
34111	4.134	11.125	0.000	
34112	4.619	10.240	0.000	
34113	4.108	10.639	0.000	
34114	4.607	8.967	0.000	
34115	5.065	9.598	0.000	
34116	3.991	8.531	0.000	
34117	36.647	10.609	0.000	
34118	37.018	11.125	0.000	
34119	36.968	10.720	0.000	
34120	36.055	11.125	0.000	
34121	36.218	10.664	0.000	
34122	63.794	3.859	0.000	

SOFiSTiK AG - www.sofistik.de

Composite bridge 38+50+38, b=14.25m, 2x2HL1100R HISTAR460 , slab 0.30m C30/37

Nodal Coordinates and Supports

Number	X[m]	Y[m]	Z[m]	Support Conditions
34123	66.793	1.963	0.000	
34124	65.083	0.000	0.000	
34125	61.957	1.766	0.000	
34126	64.200	1.980	0.000	
34127	61.965	6.147	0.000	
34128	65.083	8.000	0.000	
34129	66.777	5.818	0.000	
34130	64.214	5.830	0.000	
34131	39.051	0.271	0.000	
34132	39.052	0.000	0.000	
34133	38.780	0.108	0.000	
34134	38.661	0.349	0.000	
34135	38.883	0.201	0.000	
34136	39.279	0.547	0.000	
34137	39.633	0.259	0.000	
34138	39.434	0.000	0.000	
34139	39.320	0.276	0.000	
34140	84.819	3.985	0.000	
34141	83.132	2.693	0.000	
34142	81.921	4.172	0.000	
34143	84.005	5.494	0.000	
34144	83.523	4.103	0.000	
34145	86.203	4.365	0.000	
34146	86.021	2.689	0.000	
34147	85.076	2.234	0.000	
34148	85.522	3.416	0.000	
34149	43.294	4.333	0.000	
34150	44.212	6.562	0.000	
34151	46.213	5.555	0.000	
34152	44.763	3.034	0.000	
34153	44.623	4.857	0.000	
34154	42.015	3.224	0.000	
34155	41.199	4.674	0.000	
34156	42.375	5.693	0.000	
34157	42.186	4.367	0.000	
34158	87.038	5.922	0.000	
34159	88.000	4.963	0.000	
34160	87.225	3.675	0.000	
34161	87.086	4.777	0.000	
34162	50.434	6.202	0.000	
34163	48.513	3.867	0.000	
34164	48.000	8.000	0.000	
34165	48.269	5.932	0.000	
34166	39.819	0.607	0.000	
34167	40.344	0.414	0.000	
34168	40.012	0.000	0.000	
34169	39.974	0.305	0.000	
34170	38.450	8.000	0.000	
34171	39.263	7.146	0.000	
34172	38.655	6.405	0.000	
34173	38.582	7.263	0.000	
34174	71.527	6.045	0.000	
34175	69.161	3.985	0.000	
34176	69.250	8.000	0.000	
34177	69.170	5.933	0.000	
34178	53.109	5.800	0.000	
34179	56.913	5.713	0.000	
34180	56.944	2.297	0.000	
34181	53.130	2.417	0.000	
34182	55.096	4.063	0.000	
34183	71.545	2.136	0.000	
34184	69.250	0.000	0.000	
34185	69.209	2.047	0.000	
34186	38.686	2.657	0.000	
34187	39.293	1.888	0.000	

SOFiSTiK AG - www.sofistik.de

Composite bridge 38+50+38, b=14.25m, 2x2HL1100R HISTAR460 , slab 0.30m C30/37

Nodal Coordinates and Supports

Number	X[m]	Y[m]	Z[m]	Support Conditions
34188	38.606	1.472	0.000	
34189	38.665	2.034	0.000	
34190	42.271	0.000	0.000	
34191	41.304	0.829	0.000	
34192	41.941	1.928	0.000	
34193	43.235	1.222	0.000	
34194	42.152	1.006	0.000	
34195	38.328	0.094	0.000	
34196	38.413	0.671	0.000	
34197	38.346	0.370	0.000	
34198	39.397	5.238	0.000	
34199	38.669	4.404	0.000	
34200	38.669	5.441	0.000	
34201	39.386	3.311	0.000	
34202	38.680	3.422	0.000	
34203	88.000	7.096	0.000	
34204	86.557	7.011	0.000	
34205	87.550	8.000	0.000	
34206	87.229	6.974	0.000	
34207	83.729	0.000	0.000	
34208	82.292	1.207	0.000	
34209	84.294	1.286	0.000	
34210	83.321	1.340	0.000	
34211	87.435	0.000	0.000	
34212	87.275	0.111	0.000	
34213	87.372	0.276	0.000	
34214	87.587	0.178	0.000	
34215	87.415	0.135	0.000	
34216	80.520	1.261	0.000	
34217	78.000	0.000	0.000	
34218	76.365	1.981	0.000	
34219	79.460	3.299	0.000	
34220	78.641	1.638	0.000	
34221	74.286	4.141	0.000	
34222	73.417	0.000	0.000	
34223	74.019	2.135	0.000	
34224	46.253	1.705	0.000	
34225	50.464	1.919	0.000	
34226	48.000	0.000	0.000	
34227	48.345	1.893	0.000	
34228	85.513	6.943	0.000	
34229	83.088	6.797	0.000	
34230	84.614	8.000	0.000	
34231	84.345	6.770	0.000	
34232	87.175	0.637	0.000	
34233	86.781	0.740	0.000	
34234	87.008	1.211	0.000	
34235	87.354	1.001	0.000	
34236	87.044	0.875	0.000	
34237	44.275	0.000	0.000	
34238	44.589	1.465	0.000	
34239	40.088	8.000	0.000	
34240	41.396	6.935	0.000	
34241	40.258	6.009	0.000	
34242	40.196	7.032	0.000	
34243	85.988	0.000	0.000	
34244	85.590	0.907	0.000	
34245	86.157	1.454	0.000	
34246	86.379	0.557	0.000	
34247	86.027	0.719	0.000	
34248	85.074	0.000	0.000	
34249	85.005	1.104	0.000	
34250	73.417	8.000	0.000	
34251	76.222	6.233	0.000	
34252	74.003	6.052	0.000	

SOFiSTiK AG - www.sofistik.de

Composite bridge 38+50+38, b=14.25m, 2x2HL1100R HISTAR460 , slab 0.30m C30/37

Nodal Coordinates and Supports

Number	X[m]	Y[m]	Z[m]	Support Conditions
34253	87.747	0.512	0.000	
34254	88.000	0.410	0.000	
34255	87.785	0.000	0.000	
34256	87.791	0.285	0.000	
34257	86.948	0.000	0.000	
34258	86.835	0.275	0.000	
34259	87.093	0.347	0.000	
34260	87.120	0.121	0.000	
34261	86.991	0.187	0.000	
34262	86.566	0.000	0.000	
34263	86.627	0.400	0.000	
34264	86.823	2.696	0.000	
34265	86.835	1.774	0.000	
34266	86.433	2.130	0.000	
34267	81.368	6.362	0.000	
34268	79.012	5.929	0.000	
34269	80.425	4.939	0.000	
34270	39.014	0.964	0.000	
34271	38.524	1.017	0.000	
34272	87.544	1.514	0.000	
34273	88.000	1.373	0.000	
34274	87.695	0.832	0.000	
34275	87.673	1.186	0.000	
34276	39.710	1.131	0.000	
34277	40.054	2.206	0.000	
34278	40.455	1.196	0.000	
34279	39.914	1.597	0.000	
34280	40.205	3.958	0.000	
34281	40.934	2.717	0.000	
34282	40.149	3.002	0.000	
34283	43.388	8.000	0.000	
34284	42.849	6.889	0.000	
34285	87.454	2.164	0.000	
34286	88.000	2.830	0.000	
34287	87.388	2.843	0.000	
34288	40.233	4.962	0.000	
34289	87.481	0.510	0.000	
34290	87.276	0.432	0.000	
34291	40.926	0.000	0.000	
34292	40.771	0.607	0.000	
34293	87.230	1.635	0.000	
34294	39.470	0.808	0.000	
34295	82.088	8.000	0.000	
34296	82.154	7.081	0.000	
34297	86.357	8.000	0.000	
34298	86.200	7.246	0.000	
34299	87.662	0.600	0.000	
34300	77.991	8.000	0.000	
34301	77.867	6.721	0.000	
34302	81.691	0.000	0.000	
34303	81.606	0.862	0.000	
34304	87.196	0.000	0.000	
34305	87.195	0.077	0.000	
34306	38.350	0.000	0.000	
34307	38.615	0.077	0.000	
34308	38.421	0.055	0.000	
34309	38.777	0.000	0.000	
34310	38.736	0.068	0.000	
34311	41.660	2.538	0.000	
34312	60.716	0.000	0.000	
34313	59.327	1.641	0.000	
34314	60.658	1.253	0.000	
34315	52.158	8.000	0.000	
34316	51.990	6.709	0.000	
34317	52.283	0.000	0.000	

SOFiSTiK AG - www.sofistik.de

Composite bridge 38+50+38, b=14.25m, 2x2HL1100R HISTAR460 , slab 0.30m C30/37

Nodal Coordinates and Supports

Number	X[m]	Y[m]	Z[m]	Support Conditions
34318	52.015	1.496	0.000	
34319	59.326	6.322	0.000	
34320	57.220	8.000	0.000	
34321	57.771	6.579	0.000	
34322	57.238	0.000	0.000	
34323	57.778	1.397	0.000	
34324	60.725	8.000	0.000	
34325	60.658	6.701	0.000	
34326	87.327	-0.587	0.000	
34327	87.436	-0.322	0.000	
34328	87.725	-0.518	0.000	
34329	87.654	-0.901	0.000	
34330	39.648	-2.262	0.000	
34331	39.064	-2.446	0.000	
34332	38.947	-2.062	0.000	
34333	39.526	-1.826	0.000	
34334	39.304	-2.136	0.000	
34335	39.219	-1.380	0.000	
34336	39.535	-1.143	0.000	
34337	39.966	-1.555	0.000	
34338	39.562	-1.491	0.000	
34339	73.417	-3.125	0.000	
34340	71.338	-1.562	0.000	
34341	75.551	-1.523	0.000	
34342	73.428	-1.559	0.000	
34343	69.250	-3.125	0.000	
34344	67.165	-1.561	0.000	
34345	69.250	-1.562	0.000	
34346	58.868	-1.600	0.000	
34347	56.750	-3.125	0.000	
34348	54.686	-1.522	0.000	
34349	56.824	-1.566	0.000	
34350	62.975	-1.549	0.000	
34351	60.917	-3.125	0.000	
34352	60.892	-1.563	0.000	
34353	52.583	-3.125	0.000	
34354	50.364	-1.557	0.000	
34355	52.523	-1.559	0.000	
34356	65.083	-3.125	0.000	
34357	65.078	-1.559	0.000	
34358	48.298	-3.125	0.000	
34359	46.166	-1.420	0.000	
34360	48.168	-1.521	0.000	
34361	84.687	-1.405	0.000	
34362	84.047	-3.125	0.000	
34363	82.744	-1.606	0.000	
34364	83.891	-1.571	0.000	
34365	79.654	-1.573	0.000	
34366	77.406	-3.125	0.000	
34367	77.702	-1.501	0.000	
34368	81.098	-3.125	0.000	
34369	81.365	-1.620	0.000	
34370	41.513	-0.705	0.000	
34371	43.251	-0.762	0.000	
34372	42.492	-1.432	0.000	
34373	42.276	-0.710	0.000	
34374	38.382	-0.204	0.000	
34375	38.686	-0.552	0.000	
34376	38.338	-0.865	0.000	
34377	38.353	-0.476	0.000	
34378	38.357	-1.713	0.000	
34379	38.824	-1.609	0.000	
34380	38.398	-2.272	0.000	
34381	38.611	-1.935	0.000	
34382	40.738	-1.122	0.000	

SOFiSTiK AG - www.sofistik.de

Composite bridge 38+50+38, b=14.25m, 2x2HL1100R HISTAR460 , slab 0.30m C30/37

Nodal Coordinates and Supports

Number	X[m]	Y[m]	Z[m]	Support Conditions
34383	40.390	-0.470	0.000	
34384	40.866	-0.595	0.000	
34385	87.374	-2.754	0.000	
34386	87.610	-2.253	0.000	
34387	88.000	-2.607	0.000	
34388	87.750	-3.125	0.000	
34389	87.697	-2.673	0.000	
34390	38.960	-0.938	0.000	
34391	38.619	-1.215	0.000	
34392	38.920	-1.267	0.000	
34393	39.302	-2.760	0.000	
34394	38.852	-3.125	0.000	
34395	38.603	-2.761	0.000	
34396	38.931	-2.786	0.000	
34397	87.582	-0.154	0.000	
34398	87.286	-0.147	0.000	
34399	87.421	-0.148	0.000	
34400	38.250	-3.125	0.000	
34401	38.290	-2.679	0.000	
34402	39.733	-0.297	0.000	
34403	39.499	-0.520	0.000	
34404	39.242	-0.222	0.000	
34405	39.475	-0.254	0.000	
34406	41.241	-3.125	0.000	
34407	40.258	-2.574	0.000	
34408	40.731	-1.837	0.000	
34409	42.001	-2.352	0.000	
34410	41.002	-2.447	0.000	
34411	86.506	-0.355	0.000	
34412	86.482	-1.017	0.000	
34413	85.796	-0.743	0.000	
34414	86.203	-0.522	0.000	
34415	44.289	-1.965	0.000	
34416	44.493	-1.130	0.000	
34417	39.710	-3.125	0.000	
34418	39.723	-2.670	0.000	
34419	87.133	-0.168	0.000	
34420	87.060	-0.462	0.000	
34421	86.807	-0.277	0.000	
34422	86.984	-0.240	0.000	
34423	38.998	-0.379	0.000	
34424	38.848	-0.132	0.000	
34425	39.029	-0.180	0.000	
34426	88.000	-0.449	0.000	
34427	87.789	-0.294	0.000	
34428	85.691	-2.017	0.000	
34429	86.613	-1.887	0.000	
34430	86.809	-2.710	0.000	
34431	85.909	-3.125	0.000	
34432	86.265	-2.448	0.000	
34433	40.011	-0.707	0.000	
34434	40.031	-0.379	0.000	
34435	40.099	-1.116	0.000	
34436	40.373	-1.419	0.000	
34437	87.097	-1.139	0.000	
34438	87.279	-1.821	0.000	
34439	86.891	-1.472	0.000	
34440	39.248	-0.725	0.000	
34441	39.755	-0.884	0.000	
34442	39.509	-0.815	0.000	
34443	38.979	-0.626	0.000	
34444	85.305	-1.122	0.000	
34445	87.664	-1.708	0.000	
34446	87.426	-1.155	0.000	
34447	88.000	-1.493	0.000	

SOFiSTiK AG - www.sofistik.de

Composite bridge 38+50+38, b=14.25m, 2x2HL1100R HISTAR460 , slab 0.30m C30/37

Nodal Coordinates and Supports

Number	X[m]	Y[m]	Z[m]	Support Conditions
34448	87.704	-1.319	0.000	
34449	38.308	-1.309	0.000	
34450	44.182	-3.125	0.000	
34451	43.257	-2.260	0.000	
34452	87.548	-1.952	0.000	
34453	87.205	-0.113	0.000	
34454	86.644	-0.229	0.000	
34455	87.155	-0.776	0.000	
34456	87.160	-0.595	0.000	
34457	87.212	-1.001	0.000	
34458	87.147	-3.125	0.000	
34459	87.125	-2.874	0.000	
34460	38.650	-0.106	0.000	
34461	38.766	-0.084	0.000	
34462	38.448	-0.089	0.000	
34463	39.941	-0.913	0.000	
34464	62.976	9.553	0.000	
34465	58.866	9.599	0.000	
34466	60.917	11.125	0.000	
34467	60.891	9.566	0.000	
34468	67.166	9.562	0.000	
34469	65.083	11.125	0.000	
34470	65.079	9.561	0.000	
34471	54.669	9.517	0.000	
34472	56.750	11.125	0.000	
34473	56.819	9.565	0.000	
34474	50.441	9.528	0.000	
34475	52.583	11.125	0.000	
34476	52.513	9.557	0.000	
34477	71.338	9.562	0.000	
34478	73.417	11.125	0.000	
34479	75.553	9.524	0.000	
34480	73.431	9.557	0.000	
34481	69.250	11.125	0.000	
34482	69.250	9.562	0.000	
34483	38.539	9.758	0.000	
34484	39.144	8.906	0.000	
34485	38.525	8.920	0.000	
34486	77.419	11.125	0.000	
34487	79.738	9.545	0.000	
34488	77.714	9.500	0.000	
34489	88.000	8.608	0.000	
34490	87.062	8.545	0.000	
34491	87.575	9.127	0.000	
34492	87.568	8.560	0.000	
34493	46.626	9.687	0.000	
34494	48.901	11.125	0.000	
34495	48.412	9.488	0.000	
34496	88.000	10.744	0.000	
34497	87.587	10.233	0.000	
34498	87.333	10.694	0.000	
34499	87.750	11.125	0.000	
34500	87.656	10.682	0.000	
34501	38.250	11.125	0.000	
34502	38.776	10.567	0.000	
34503	38.412	10.476	0.000	
34504	81.118	11.125	0.000	
34505	82.980	9.720	0.000	
34506	81.536	9.601	0.000	
34507	85.674	8.695	0.000	
34508	86.509	9.217	0.000	
34509	86.415	8.639	0.000	
34510	39.735	11.125	0.000	
34511	40.615	10.365	0.000	
34512	39.998	9.681	0.000	

SOFiSTiK AG - www.sofistik.de

Composite bridge 38+50+38, b=14.25m, 2x2HL1100R HISTAR460 , slab 0.30m C30/37

Nodal Coordinates and Supports

Number	X[m]	Y[m]	Z[m]	Support Conditions
34513	39.303	10.559	0.000	
34514	39.877	10.440	0.000	
34515	84.620	8.994	0.000	
34516	84.042	11.125	0.000	
34517	85.322	10.276	0.000	
34518	84.278	9.945	0.000	
34519	85.893	11.125	0.000	
34520	86.751	10.654	0.000	
34521	86.433	9.941	0.000	
34522	86.150	10.480	0.000	
34523	88.000	9.789	0.000	
34524	87.148	9.629	0.000	
34525	87.585	9.694	0.000	
34526	41.213	8.787	0.000	
34527	40.029	8.853	0.000	
34528	44.102	9.103	0.000	
34529	43.784	10.401	0.000	
34530	45.739	11.125	0.000	
34531	45.048	10.001	0.000	
34532	41.046	11.125	0.000	
34533	42.302	10.478	0.000	
34534	41.968	9.615	0.000	
34535	41.433	10.380	0.000	
34536	42.680	8.802	0.000	
34537	38.879	11.125	0.000	
34538	38.965	10.723	0.000	
34539	42.911	11.125	0.000	
34540	42.960	10.679	0.000	
34541	84.950	8.559	0.000	
34542	87.083	11.125	0.000	
34543	87.086	10.805	0.000	
34544	86.700	9.592	0.000	
34545	124.620	1.923	0.000	
34546	123.451	1.479	0.000	
34547	122.944	2.784	0.000	
34548	124.289	2.959	0.000	
34549	119.699	6.068	0.000	
34550	121.778	8.000	0.000	
34551	122.687	6.779	0.000	
34552	121.169	4.914	0.000	
34553	121.236	6.407	0.000	
34554	117.443	3.926	0.000	
34555	115.818	5.986	0.000	
34556	118.400	8.000	0.000	
34557	117.752	5.963	0.000	
34558	124.691	4.089	0.000	
34559	126.000	3.564	0.000	
34560	125.339	2.630	0.000	
34561	125.089	3.359	0.000	
34562	122.956	4.516	0.000	
34563	123.659	5.955	0.000	
34564	125.075	5.360	0.000	
34565	124.101	4.977	0.000	
34566	107.643	6.011	0.000	
34567	105.023	4.026	0.000	
34568	103.789	6.051	0.000	
34569	106.500	8.000	0.000	
34570	105.604	6.017	0.000	
34571	110.500	8.000	0.000	
34572	111.790	5.993	0.000	
34573	109.062	3.994	0.000	
34574	109.611	5.995	0.000	
34575	89.201	0.159	0.000	
34576	89.399	0.427	0.000	
34577	89.676	0.198	0.000	

SOFiSTiK AG - www.sofistik.de

Composite bridge 38+50+38, b=14.25m, 2x2HL1100R HISTAR460 , slab 0.30m C30/37

Nodal Coordinates and Supports

Number	X[m]	Y[m]	Z[m]	Support Conditions
34578	89.434	0.000	0.000	
34579	89.416	0.186	0.000	
34580	126.000	7.277	0.000	
34581	125.370	6.423	0.000	
34582	124.729	7.108	0.000	
34583	125.550	8.000	0.000	
34584	125.408	7.198	0.000	
34585	88.450	8.000	0.000	
34586	89.264	7.309	0.000	
34587	88.768	6.286	0.000	
34588	88.623	7.179	0.000	
34589	91.050	4.875	0.000	
34590	92.613	3.961	0.000	
34591	91.195	2.620	0.000	
34592	89.955	3.554	0.000	
34593	91.193	3.682	0.000	
34594	124.938	0.000	0.000	
34595	124.787	0.239	0.000	
34596	125.008	0.390	0.000	
34597	125.118	0.145	0.000	
34598	124.968	0.184	0.000	
34599	109.375	0.000	0.000	
34600	106.909	2.000	0.000	
34601	111.387	2.004	0.000	
34602	109.051	1.986	0.000	
34603	93.106	1.183	0.000	
34604	94.469	2.991	0.000	
34605	96.072	1.690	0.000	
34606	94.275	0.000	0.000	
34607	94.441	1.462	0.000	
34608	105.375	0.000	0.000	
34609	103.377	2.037	0.000	
34610	105.011	2.031	0.000	
34611	125.440	0.000	0.000	
34612	125.280	0.136	0.000	
34613	125.434	0.300	0.000	
34614	125.596	0.156	0.000	
34615	125.422	0.141	0.000	
34616	91.438	0.541	0.000	
34617	91.780	1.527	0.000	
34618	92.271	0.000	0.000	
34619	92.158	0.835	0.000	
34620	88.293	0.657	0.000	
34621	88.464	0.214	0.000	
34622	88.215	0.000	0.000	
34623	88.249	0.316	0.000	
34624	99.998	6.152	0.000	
34625	102.500	8.000	0.000	
34626	101.508	4.170	0.000	
34627	101.894	6.122	0.000	
34628	90.726	0.520	0.000	
34629	90.066	0.308	0.000	
34630	89.799	0.822	0.000	
34631	90.555	1.214	0.000	
34632	90.283	0.700	0.000	
34633	125.735	0.418	0.000	
34634	126.000	0.328	0.000	
34635	125.790	0.000	0.000	
34636	125.793	0.234	0.000	
34637	97.934	3.907	0.000	
34638	99.959	2.089	0.000	
34639	98.000	0.000	0.000	
34640	97.988	1.891	0.000	
34641	88.568	1.442	0.000	
34642	88.992	2.391	0.000	

SOFiSTiK AG - www.sofistik.de

Composite bridge 38+50+38, b=14.25m, 2x2HL1100R HISTAR460 , slab 0.30m C30/37

Nodal Coordinates and Supports

Number	X[m]	Y[m]	Z[m]	Support Conditions
34643	89.921	1.936	0.000	
34644	89.286	1.195	0.000	
34645	89.118	1.745	0.000	
34646	126.000	2.071	0.000	
34647	125.283	1.393	0.000	
34648	125.323	1.933	0.000	
34649	89.758	5.592	0.000	
34650	90.398	7.063	0.000	
34651	91.841	6.545	0.000	
34652	90.774	6.069	0.000	
34653	113.341	3.976	0.000	
34654	115.742	1.979	0.000	
34655	114.125	0.000	0.000	
34656	113.574	1.983	0.000	
34657	102.125	0.000	0.000	
34658	101.680	2.117	0.000	
34659	88.903	4.182	0.000	
34660	88.841	5.249	0.000	
34661	121.137	2.696	0.000	
34662	121.882	3.708	0.000	
34663	95.961	5.548	0.000	
34664	98.000	8.000	0.000	
34665	97.904	5.995	0.000	
34666	89.008	0.655	0.000	
34667	89.347	0.755	0.000	
34668	122.180	1.019	0.000	
34669	123.785	0.544	0.000	
34670	122.805	0.000	0.000	
34671	123.121	0.756	0.000	
34672	118.400	0.000	0.000	
34673	119.566	1.818	0.000	
34674	117.738	1.940	0.000	
34675	93.730	6.246	0.000	
34676	94.230	4.728	0.000	
34677	88.669	0.178	0.000	
34678	88.826	0.371	0.000	
34679	88.978	0.151	0.000	
34680	88.800	0.000	0.000	
34681	88.820	0.176	0.000	
34682	114.500	8.000	0.000	
34683	113.750	5.987	0.000	
34684	121.223	0.000	0.000	
34685	120.975	1.437	0.000	
34686	88.923	3.222	0.000	
34687	124.178	8.000	0.000	
34688	123.788	6.983	0.000	
34689	124.521	0.000	0.000	
34690	124.339	0.439	0.000	
34691	124.722	0.643	0.000	
34692	124.577	0.364	0.000	
34693	90.892	1.843	0.000	
34694	125.082	0.914	0.000	
34695	125.324	0.562	0.000	
34696	125.018	0.651	0.000	
34697	125.708	0.729	0.000	
34698	125.561	0.500	0.000	
34699	88.658	0.724	0.000	
34700	88.362	1.030	0.000	
34701	125.650	1.084	0.000	
34702	126.000	0.962	0.000	
34703	125.816	0.959	0.000	
34704	125.323	1.135	0.000	
34705	126.000	5.732	0.000	
34706	125.521	5.752	0.000	
34707	125.195	0.000	0.000	

SOFiSTiK AG - www.sofistik.de

Composite bridge 38+50+38, b=14.25m, 2x2HL1100R HISTAR460 , slab 0.30m C30/37

Nodal Coordinates and Supports

Number	X[m]	Y[m]	Z[m]	Support Conditions
34708	125.196	0.099	0.000	
34709	123.932	0.000	0.000	
34710	124.056	0.364	0.000	
34711	89.064	0.000	0.000	
34712	89.073	0.103	0.000	
34713	90.975	0.000	0.000	
34714	91.006	0.346	0.000	
34715	89.886	0.000	0.000	
34716	89.899	0.143	0.000	
34717	88.579	0.000	0.000	
34718	88.578	0.131	0.000	
34719	88.830	0.546	0.000	
34720	93.023	8.000	0.000	
34721	92.973	7.020	0.000	
34722	89.888	8.000	0.000	
34723	89.906	7.543	0.000	
34724	125.129	-0.571	0.000	
34725	125.384	-0.311	0.000	
34726	125.702	-0.499	0.000	
34727	125.542	-0.879	0.000	
34728	124.866	-1.661	0.000	
34729	125.586	-1.725	0.000	
34730	125.571	-2.290	0.000	
34731	124.907	-2.256	0.000	
34732	125.224	-1.981	0.000	
34733	125.354	-2.746	0.000	
34734	125.014	-3.125	0.000	
34735	124.323	-2.531	0.000	
34736	124.886	-2.660	0.000	
34737	119.990	-1.403	0.000	
34738	118.438	-3.125	0.000	
34739	116.413	-1.534	0.000	
34740	118.393	-1.531	0.000	
34741	114.500	-3.125	0.000	
34742	112.111	-1.528	0.000	
34743	114.306	-1.528	0.000	
34744	104.142	-1.599	0.000	
34745	102.500	-3.125	0.000	
34746	100.404	-1.528	0.000	
34747	102.320	-1.595	0.000	
34748	88.505	-0.321	0.000	
34749	88.315	-0.812	0.000	
34750	88.270	-0.392	0.000	
34751	98.901	-3.125	0.000	
34752	96.591	-1.550	0.000	
34753	98.406	-1.474	0.000	
34754	125.087	-0.146	0.000	
34755	124.873	-0.333	0.000	
34756	124.715	-0.144	0.000	
34757	124.919	-0.157	0.000	
34758	91.363	-0.715	0.000	
34759	90.532	-1.131	0.000	
34760	90.342	-0.484	0.000	
34761	90.775	-0.599	0.000	
34762	124.190	-1.351	0.000	
34763	124.696	-0.861	0.000	
34764	125.199	-1.199	0.000	
34765	124.722	-1.250	0.000	
34766	126.000	-2.589	0.000	
34767	125.750	-3.125	0.000	
34768	125.703	-2.682	0.000	
34769	91.046	-3.125	0.000	
34770	90.108	-2.590	0.000	
34771	90.451	-1.858	0.000	
34772	91.535	-2.358	0.000	

SOFiSTiK AG - www.sofistik.de

Composite bridge 38+50+38, b=14.25m, 2x2HL1100R HISTAR460 , slab 0.30m C30/37

Nodal Coordinates and Supports

Number	X[m]	Y[m]	Z[m]	Support Conditions
34773	90.755	-2.457	0.000	
34774	89.842	-1.064	0.000	
34775	89.374	-0.825	0.000	
34776	89.563	-0.435	0.000	
34777	89.942	-0.625	0.000	
34778	89.674	-0.730	0.000	
34779	88.250	-3.125	0.000	
34780	88.390	-2.311	0.000	
34781	88.602	-2.806	0.000	
34782	88.296	-2.699	0.000	
34783	110.500	-3.125	0.000	
34784	107.877	-1.567	0.000	
34785	109.921	-1.529	0.000	
34786	106.500	-3.125	0.000	
34787	105.963	-1.596	0.000	
34788	89.268	-0.207	0.000	
34789	89.060	-0.329	0.000	
34790	88.927	-0.118	0.000	
34791	89.089	-0.167	0.000	
34792	89.726	-0.172	0.000	
34793	89.491	-0.199	0.000	
34794	125.583	-0.168	0.000	
34795	125.257	-0.137	0.000	
34796	125.404	-0.145	0.000	
34797	95.739	-3.125	0.000	
34798	93.926	-1.601	0.000	
34799	95.033	-1.595	0.000	
34800	122.250	-0.769	0.000	
34801	121.551	-2.041	0.000	
34802	121.276	-1.134	0.000	
34803	123.694	-0.426	0.000	
34804	123.346	-1.060	0.000	
34805	123.050	-0.572	0.000	
34806	88.672	-1.100	0.000	
34807	88.981	-0.612	0.000	
34808	89.100	-1.347	0.000	
34809	89.026	-0.937	0.000	
34810	92.732	-0.822	0.000	
34811	92.016	-1.525	0.000	
34812	92.056	-0.764	0.000	
34813	126.000	-0.423	0.000	
34814	125.787	-0.280	0.000	
34815	89.735	-3.125	0.000	
34816	89.077	-2.816	0.000	
34817	89.321	-2.273	0.000	
34818	89.520	-2.698	0.000	
34819	89.642	-1.614	0.000	
34820	88.756	-1.971	0.000	
34821	89.167	-1.810	0.000	
34822	123.758	-3.125	0.000	
34823	122.766	-2.346	0.000	
34824	123.519	-1.752	0.000	
34825	123.567	-2.384	0.000	
34826	124.398	-0.168	0.000	
34827	124.416	-0.513	0.000	
34828	124.126	-0.289	0.000	
34829	88.774	-0.130	0.000	
34830	88.795	-0.386	0.000	
34831	88.666	-0.220	0.000	
34832	124.783	-0.567	0.000	
34833	90.101	-1.415	0.000	
34834	126.000	-1.450	0.000	
34835	125.614	-1.298	0.000	
34836	88.370	-1.733	0.000	
34837	88.325	-1.288	0.000	

SOFiSTiK AG - www.sofistik.de

Composite bridge 38+50+38, b=14.25m, 2x2HL1100R HISTAR460 , slab 0.30m C30/37

Nodal Coordinates and Supports

Number	X[m]	Y[m]	Z[m]	Support Conditions
34838	93.001	-3.125	0.000	
34839	93.120	-2.251	0.000	
34840	92.416	-2.324	0.000	
34841	125.183	-0.102	0.000	
34842	121.913	-3.125	0.000	
34843	121.984	-2.516	0.000	
34844	123.639	-1.376	0.000	
34845	124.554	-0.097	0.000	
34846	88.474	-2.030	0.000	
34847	88.830	-0.079	0.000	
34848	90.075	-0.217	0.000	
34849	89.932	-0.114	0.000	
34850	90.120	-0.442	0.000	
34851	88.791	-3.125	0.000	
34852	88.811	-2.922	0.000	
34853	88.953	-0.436	0.000	
34854	91.887	9.680	0.000	
34855	94.048	9.113	0.000	
34856	91.071	8.818	0.000	
34857	92.528	8.839	0.000	
34858	90.497	10.418	0.000	
34859	91.046	11.125	0.000	
34860	92.305	10.486	0.000	
34861	91.382	10.417	0.000	
34862	112.499	9.563	0.000	
34863	114.500	11.125	0.000	
34864	116.471	9.564	0.000	
34865	114.495	9.563	0.000	
34866	108.500	9.562	0.000	
34867	110.500	11.125	0.000	
34868	110.500	9.563	0.000	
34869	104.499	9.561	0.000	
34870	106.500	11.125	0.000	
34871	106.500	9.562	0.000	
34872	100.464	9.505	0.000	
34873	102.500	11.125	0.000	
34874	102.494	9.554	0.000	
34875	118.438	11.125	0.000	
34876	120.161	9.550	0.000	
34877	118.403	9.563	0.000	
34878	121.683	11.125	0.000	
34879	122.874	9.706	0.000	
34880	121.714	9.559	0.000	
34881	124.852	8.742	0.000	
34882	125.315	9.554	0.000	
34883	126.000	8.892	0.000	
34884	125.418	8.844	0.000	
34885	89.129	10.485	0.000	
34886	89.735	11.125	0.000	
34887	89.764	9.692	0.000	
34888	89.716	10.446	0.000	
34889	96.606	9.677	0.000	
34890	98.901	11.125	0.000	
34891	98.412	9.484	0.000	
34892	88.343	10.745	0.000	
34893	88.852	11.125	0.000	
34894	88.451	10.118	0.000	
34895	88.662	10.612	0.000	
34896	89.011	8.820	0.000	
34897	89.854	8.847	0.000	
34898	88.393	9.386	0.000	
34899	88.452	8.737	0.000	
34900	125.750	11.125	0.000	
34901	126.000	10.455	0.000	
34902	125.560	10.220	0.000	

SOFiSTiK AG - www.sofistik.de

Composite bridge 38+50+38, b=14.25m, 2x2HL1100R HISTAR460 , slab 0.30m C30/37

Nodal Coordinates and Supports

Number	X[m]	Y[m]	Z[m]	Support Conditions
34903	125.403	10.804	0.000	
34904	125.704	10.635	0.000	
34905	93.773	10.407	0.000	
34906	95.739	11.125	0.000	
34907	95.035	10.003	0.000	
34908	124.425	10.270	0.000	
34909	123.989	9.027	0.000	
34910	123.758	11.125	0.000	
34911	123.783	9.967	0.000	
34912	88.264	9.789	0.000	
34913	88.228	11.125	0.000	
34914	88.179	10.858	0.000	
34915	92.908	11.125	0.000	
34916	92.956	10.686	0.000	
34917	124.320	8.572	0.000	
34918	124.981	10.124	0.000	
34919	125.277	9.973	0.000	
34920	124.933	10.742	0.000	
34921	125.151	11.125	0.000	
34922	125.132	10.932	0.000	
34923	124.770	10.395	0.000	
34924	126.000	-0.767	5.809	
34925	126.000	-3.125	6.759	
34926	126.000	-1.244	8.601	
34927	126.000	1.261	7.730	
34928	126.000	-0.896	7.108	
34929	126.000	0.804	4.679	
34930	126.000	-1.562	3.550	
34931	126.000	-3.125	4.442	
34932	126.000	-1.054	4.662	
34933	126.000	-1.562	12.000	
34934	126.000	0.167	10.505	
34935	126.000	-3.125	10.092	
34936	126.000	-1.456	10.242	
34937	126.000	2.280	10.213	
34938	126.000	4.925	10.244	
34939	126.000	4.153	7.591	
34940	126.000	3.219	8.982	
34941	126.000	9.562	3.550	
34942	126.000	7.847	4.552	
34943	126.000	9.265	5.644	
34944	126.000	11.125	4.442	
34945	126.000	9.437	4.547	
34946	126.000	3.253	5.085	
34947	126.000	6.927	7.065	
34948	126.000	5.793	4.932	
34949	126.000	4.977	6.182	
34950	126.000	11.125	10.092	
34951	126.000	8.907	8.599	
34952	126.000	7.331	10.552	
34953	126.000	9.562	12.000	
34954	126.000	9.164	10.246	
34955	126.000	11.125	6.759	
34956	126.000	8.991	7.084	
34957	126.000	6.016	12.000	
34958	126.000	6.056	11.009	
34959	126.000	1.626	12.000	
34960	126.000	1.501	10.942	
34961	126.000	2.145	3.550	
34962	126.000	2.070	4.375	
34963	126.000	6.556	3.550	
34964	126.000	6.533	4.277	
34965	127.000	5.632	3.550	
34966	127.000	7.179	1.771	
34967	127.000	5.781	-0.350	

SOFiSTiK AG - www.sofistik.de

Composite bridge 38+50+38, b=14.25m, 2x2HL1100R HISTAR460 , slab 0.30m C30/37

Nodal Coordinates and Supports

Number	X[m]	Y[m]	Z[m]	Support Conditions
34968	127.000	3.993	1.603	
34969	127.000	5.684	1.613	
34970	127.000	0.776	1.782	
34971	127.000	2.368	3.550	
34972	127.000	2.219	-0.350	
34973	127.000	2.301	1.627	
34974	127.000	-2.387	3.550	
34975	127.000	-1.422	2.645	
34976	127.000	-2.179	1.905	
34977	127.000	-3.125	2.821	
34978	127.000	-2.298	2.758	
34979	127.000	-0.712	1.109	
34980	127.000	-1.344	-0.350	
34981	127.000	-3.125	0.871	
34982	127.000	-1.786	0.809	
34983	127.000	9.344	-0.350	
34984	127.000	8.737	1.675	
34985	127.000	10.312	2.464	
34986	127.000	11.125	0.871	
34987	127.000	9.791	1.203	
34988	127.000	-0.457	3.550	
34989	127.000	-0.386	2.196	
34990	127.000	8.383	3.550	
34991	127.000	8.145	2.194	
34992	127.000	11.125	2.944	
34993	127.000	10.516	3.550	
34994	127.000	10.637	3.009	
34995	126.566	0.728	3.550	
34996	126.473	4.089	3.550	
34997	126.489	2.224	3.550	
34998	126.576	7.327	3.550	
34999	126.487	5.890	3.550	
35000	126.570	9.019	3.550	
35001	126.500	11.125	3.550	
35002	126.455	9.978	3.550	
35003	126.500	-3.125	3.550	
35004	126.573	-0.996	3.550	
35005	126.463	-1.963	3.550	
35006	126.712	8.321	3.550	
35007	126.713	-0.332	3.550	
35112	-1.500	0.000	14.000	
35113	-1.500	0.000	16.000	
35114	-1.500	0.000	18.000	
35115	-1.500	0.000	20.000	
35116	-1.500	0.000	22.000	
35117	-1.500	0.000	24.000	
35118	-1.500	0.000	26.000	
35119	-1.500	0.000	28.000	
35120	-1.500	0.000	30.000	
35121	1.500	0.000	14.000	
35122	1.500	0.000	16.000	
35123	1.500	0.000	18.000	
35124	1.500	0.000	20.000	
35125	1.500	0.000	22.000	
35126	1.500	0.000	24.000	
35127	1.500	0.000	26.000	
35128	1.500	0.000	28.000	
35129	1.500	0.000	30.000	
35130	-1.500	8.000	14.000	
35131	-1.500	8.000	16.000	
35132	-1.500	8.000	18.000	
35133	-1.500	8.000	20.000	
35134	-1.500	8.000	22.000	
35135	-1.500	8.000	24.000	
35136	-1.500	8.000	26.000	

SOFiSTiK AG - www.sofistik.de

Composite bridge 38+50+38, b=14.25m, 2x2HL1100R HISTAR460 , slab 0.30m C30/37

Nodal Coordinates and Supports

Number	X[m]	Y[m]	Z[m]	Support Conditions
35137	-1.500	8.000	28.000	
35138	-1.500	8.000	30.000	
35139	1.500	8.000	14.000	
35140	1.500	8.000	16.000	
35141	1.500	8.000	18.000	
35142	1.500	8.000	20.000	
35143	1.500	8.000	22.000	
35144	1.500	8.000	24.000	
35145	1.500	8.000	26.000	
35146	1.500	8.000	28.000	
35147	1.500	8.000	30.000	
35148	38.000	0.000	10.310	
35149	38.000	0.000	8.620	
35150	38.000	0.000	6.930	
35151	38.000	0.000	5.240	
35152	38.000	2.000	12.000	
35153	38.000	4.000	12.000	
35154	38.000	6.000	12.000	
35155	38.000	2.000	3.550	
35156	38.000	4.000	3.550	
35157	38.000	6.000	3.550	
35158	36.500	0.000	14.000	
35159	36.500	0.000	16.000	
35160	36.500	0.000	18.000	
35161	36.500	0.000	20.000	
35162	36.500	0.000	22.000	
35163	36.500	0.000	24.000	
35164	36.500	0.000	26.000	
35165	36.500	0.000	28.000	
35166	36.500	0.000	30.000	
35167	39.500	0.000	14.000	
35168	39.500	0.000	16.000	
35169	39.500	0.000	18.000	
35170	39.500	0.000	20.000	
35171	39.500	0.000	22.000	
35172	39.500	0.000	24.000	
35173	39.500	0.000	26.000	
35174	39.500	0.000	28.000	
35175	39.500	0.000	30.000	
35176	38.000	8.000	10.310	
35177	38.000	8.000	8.620	
35178	38.000	8.000	6.930	
35179	38.000	8.000	5.240	
35180	36.500	8.000	14.000	
35181	36.500	8.000	16.000	
35182	36.500	8.000	18.000	
35183	36.500	8.000	20.000	
35184	36.500	8.000	22.000	
35185	36.500	8.000	24.000	
35186	36.500	8.000	26.000	
35187	36.500	8.000	28.000	
35188	36.500	8.000	30.000	
35189	39.500	8.000	14.000	
35190	39.500	8.000	16.000	
35191	39.500	8.000	18.000	
35192	39.500	8.000	20.000	
35193	39.500	8.000	22.000	
35194	39.500	8.000	24.000	
35195	39.500	8.000	26.000	
35196	39.500	8.000	28.000	
35197	39.500	8.000	30.000	
35198	38.000	-1.562	12.000	
35199	38.000	-1.562	3.550	
35200	38.000	9.562	12.000	
35201	38.000	9.562	3.550	

SOFiSTiK AG - www.sofistik.de

Composite bridge 38+50+38, b=14.25m, 2x2HL1100R HISTAR460 , slab 0.30m C30/37

Nodal Coordinates and Supports

Number	X[m]	Y[m]	Z[m]	Support Conditions
35202	88.000	0.000	10.310	
35203	88.000	0.000	8.620	
35204	88.000	0.000	6.930	
35205	88.000	0.000	5.240	
35206	88.000	2.000	12.000	
35207	88.000	4.000	12.000	
35208	88.000	6.000	12.000	
35209	88.000	2.000	3.550	
35210	88.000	4.000	3.550	
35211	88.000	6.000	3.550	
35212	86.500	0.000	14.000	
35213	86.500	0.000	16.000	
35214	86.500	0.000	18.000	
35215	86.500	0.000	20.000	
35216	86.500	0.000	22.000	
35217	86.500	0.000	24.000	
35218	86.500	0.000	26.000	
35219	86.500	0.000	28.000	
35220	86.500	0.000	30.000	
35221	89.500	0.000	14.000	
35222	89.500	0.000	16.000	
35223	89.500	0.000	18.000	
35224	89.500	0.000	20.000	
35225	89.500	0.000	22.000	
35226	89.500	0.000	24.000	
35227	89.500	0.000	26.000	
35228	89.500	0.000	28.000	
35229	89.500	0.000	30.000	
35230	88.000	8.000	10.310	
35231	88.000	8.000	8.620	
35232	88.000	8.000	6.930	
35233	88.000	8.000	5.240	
35234	86.500	8.000	14.000	
35235	86.500	8.000	16.000	
35236	86.500	8.000	18.000	
35237	86.500	8.000	20.000	
35238	86.500	8.000	22.000	
35239	86.500	8.000	24.000	
35240	86.500	8.000	26.000	
35241	86.500	8.000	28.000	
35242	86.500	8.000	30.000	
35243	89.500	8.000	14.000	
35244	89.500	8.000	16.000	
35245	89.500	8.000	18.000	
35246	89.500	8.000	20.000	
35247	89.500	8.000	22.000	
35248	89.500	8.000	24.000	
35249	89.500	8.000	26.000	
35250	89.500	8.000	28.000	
35251	89.500	8.000	30.000	
35252	88.000	-1.562	12.000	
35253	88.000	-1.562	3.550	
35254	88.000	9.562	12.000	
35255	88.000	9.562	3.550	
35256	124.500	0.000	14.000	
35257	124.500	0.000	16.000	
35258	124.500	0.000	18.000	
35259	124.500	0.000	20.000	
35260	124.500	0.000	22.000	
35261	124.500	0.000	24.000	
35262	124.500	0.000	26.000	
35263	124.500	0.000	28.000	
35264	124.500	0.000	30.000	
35265	127.500	0.000	14.000	
35266	127.500	0.000	16.000	

SOFiSTiK AG - www.sofistik.de

Composite bridge 38+50+38, b=14.25m, 2x2HL1100R HISTAR460 , slab 0.30m C30/37

Nodal Coordinates and Supports

Number	X[m]	Y[m]	Z[m]	Support Conditions
35267	127.500	0.000	18.000	
35268	127.500	0.000	20.000	
35269	127.500	0.000	22.000	
35270	127.500	0.000	24.000	
35271	127.500	0.000	26.000	
35272	127.500	0.000	28.000	
35273	127.500	0.000	30.000	
35274	124.500	8.000	14.000	
35275	124.500	8.000	16.000	
35276	124.500	8.000	18.000	
35277	124.500	8.000	20.000	
35278	124.500	8.000	22.000	
35279	124.500	8.000	24.000	
35280	124.500	8.000	26.000	
35281	124.500	8.000	28.000	
35282	124.500	8.000	30.000	
35283	127.500	8.000	14.000	
35284	127.500	8.000	16.000	
35285	127.500	8.000	18.000	
35286	127.500	8.000	20.000	
35287	127.500	8.000	22.000	
35288	127.500	8.000	24.000	
35289	127.500	8.000	26.000	
35290	127.500	8.000	28.000	
35291	127.500	8.000	30.000	
MIN	-1.500	-3.135	-0.350	
MAX	127.500	11.135	32.000	

Kinematic Constraints

Grp	LV	Node	type	reference	dx	dy	dz	df
71	1	1109	KF	1110	0.000	0.000	3.050	
11	1	1127	KF	1107	-1.500	0.000	0.000	
11	1	1137	KF	1107	1.500	0.000	0.000	
71	1	1209	KF	1210	0.000	0.000	3.050	
11	1	1227	KF	1207	-1.500	0.000	0.000	
11	1	1237	KF	1207	1.500	0.000	0.000	
72	1	2109	KF	2110	0.000	0.000	3.050	
12	1	2127	KF	2107	-1.500	0.000	0.000	
12	1	2137	KF	2107	1.500	0.000	0.000	
72	1	2209	KF	2210	0.000	0.000	3.050	
12	1	2227	KF	2207	-1.500	0.000	0.000	
12	1	2237	KF	2207	1.500	0.000	0.000	
73	1	3109	KF	3110	0.000	0.000	3.050	
13	1	3127	KF	3107	-1.500	0.000	0.000	
13	1	3137	KF	3107	1.500	0.000	0.000	
73	1	3209	KF	3210	0.000	0.000	3.050	
13	1	3227	KF	3207	-1.500	0.000	0.000	
13	1	3237	KF	3207	1.500	0.000	0.000	
74	1	4109	KF	4110	0.000	0.000	3.050	
14	1	4127	KF	4107	-1.500	0.000	0.000	
14	1	4137	KF	4107	1.500	0.000	0.000	
74	1	4209	KF	4210	0.000	0.000	3.050	
14	1	4227	KF	4207	-1.500	0.000	0.000	
14	1	4237	KF	4207	1.500	0.000	0.000	
191	1	11111	KF	1111	0.000	0.000	1.200	
191	1	11114	KF	1114	0.000	0.000	1.200	
191	1	11211	KF	1211	0.000	0.000	1.200	
191	1	11214	KF	1214	0.000	0.000	1.200	
192	1	22111	KF	2111	0.000	0.000	1.200	
192	1	22114	KF	2114	0.000	0.000	1.200	
192	1	22211	KF	2211	0.000	0.000	1.200	
192	1	22214	KF	2214	0.000	0.000	1.200	
193	1	33111	KF	3111	0.000	0.000	1.200	
193	1	33114	KF	3114	0.000	0.000	1.200	

SOFiSTiK AG - www.sofistik.de

Composite bridge 38+50+38, b=14.25m, 2x2HL1100R HISTAR460 , slab 0.30m C30/37

Kinematic Constraints

Grp	LV	Node	type	reference	dx	dy	dz	df
193	1	33211	KF	3211	0.000	0.000	1.200	
193	1	33214	KF	3214	0.000	0.000	1.200	

Flat Elements

Grp	Number	Node	Node	Node	Node	Mat	t[m]	C[kN/m3]	direction local x		
31	310001	33479	33656	33660	33659	50	1.800		0.000	1.000	0.000
31	310002	33656	33270	33657	33660	50	1.800		0.000	1.000	0.000
31	310003	33657	33269	33658	33660	50	1.800		0.000	1.000	0.000
31	310004	33658	33481	33659	33660	50	1.800		0.000	1.000	0.000
31	310005	33479	33661	33664	33656	50	1.800		0.000	1.000	0.000
31	310006	33661	1108	33662	33664	50	1.800		0.000	1.000	0.000
31	310007	33662	1808	33663	33664	50	1.800		0.000	1.000	0.000
31	310008	33663	33270	33656	33664	50	1.800		0.000	1.000	0.000
31	310009	1807	33665	33668	33667	50	1.800		0.000	1.000	0.000
31	310010	33665	1107	33666	33668	50	1.800		0.000	1.000	0.000
31	310011	33666	33481	33658	33668	50	1.800		0.000	1.000	0.000
31	310012	33658	33269	33667	33668	50	1.800		0.000	1.000	0.000
31	310013	33479	33659	33672	33671	50	1.800		0.000	1.000	0.000
31	310014	33659	33481	33669	33672	50	1.800		0.000	1.000	0.000
31	310015	33669	33240	33670	33672	50	1.800		0.000	1.000	0.000
31	310016	33670	33480	33671	33672	50	1.800		0.000	1.000	0.000
31	310017	1908	33673	33677	33676	50	1.800		0.000	1.000	0.000
31	310018	33673	1208	33674	33677	50	1.800		0.000	1.000	0.000
31	310019	33674	33482	33675	33677	50	1.800		0.000	1.000	0.000
31	310020	33675	33284	33676	33677	50	1.800		0.000	1.000	0.000
31	310021	33241	33678	33681	33680	50	1.800		0.000	1.000	0.000
31	310022	33678	33479	33671	33681	50	1.800		0.000	1.000	0.000
31	310023	33671	33480	33679	33681	50	1.800		0.000	1.000	0.000
31	310024	33679	33482	33680	33681	50	1.800		0.000	1.000	0.000
31	310025	1907	33682	33686	33685	50	1.800		0.000	1.000	0.000
31	310026	33682	33283	33683	33686	50	1.800		0.000	1.000	0.000
31	310027	33683	33480	33684	33686	50	1.800		0.000	1.000	0.000
31	310028	33684	1207	33685	33686	50	1.800		0.000	1.000	0.000
31	310029	33284	33675	33688	33687	50	1.800		0.000	1.000	0.000
31	310030	33675	33482	33679	33688	50	1.800		0.000	1.000	0.000
31	310031	33679	33480	33683	33688	50	1.800		0.000	1.000	0.000
31	310032	33683	33283	33687	33688	50	1.800		0.000	1.000	0.000
31	310033	1207	33684	33690	33689	50	1.800		0.000	1.000	0.000
31	310034	33480	33670	33690	33684	50	1.800		0.000	1.000	0.000
31	310035	33240	33689	33690	33670	50	1.800		0.000	1.000	0.000
31	310036	1107	33691	33692	33666	50	1.800		0.000	1.000	0.000
31	310037	33240	33669	33692	33691	50	1.800		0.000	1.000	0.000
31	310038	33481	33666	33692	33669	50	1.800		0.000	1.000	0.000
31	310039	1108	33661	33694	33693	50	1.800		0.000	1.000	0.000
31	310040	33479	33678	33694	33661	50	1.800		0.000	1.000	0.000
31	310041	33241	33693	33694	33678	50	1.800		0.000	1.000	0.000
31	310042	1208	33695	33696	33674	50	1.800		0.000	1.000	0.000
31	310043	33241	33680	33696	33695	50	1.800		0.000	1.000	0.000
31	310044	33482	33674	33696	33680	50	1.800		0.000	1.000	0.000
31	310045	33220	33697	33701	33700	50	0.300		0.000	1.000	0.000
31	310046	33697	33221	33698	33701	50	0.300		0.000	1.000	0.000
31	310047	33698	33225	33699	33701	50	0.300		0.000	1.000	0.000
31	310048	33699	33224	33700	33701	50	0.300		0.000	1.000	0.000
31	310049	33223	33702	33705	33704	50	0.300		0.000	1.000	0.000
31	310050	33702	33219	33703	33705	50	0.300		0.000	1.000	0.000
31	310051	33703	33220	33700	33705	50	0.300		0.000	1.000	0.000
31	310052	33700	33224	33704	33705	50	0.300		0.000	1.000	0.000
31	310053	1803	33706	33710	33709	50	0.300		0.000	1.000	0.000
31	310054	33706	33218	33707	33710	50	0.300		0.000	1.000	0.000
31	310055	33707	33483	33708	33710	50	0.300		0.000	1.000	0.000
31	310056	33708	33268	33709	33710	50	0.300		0.000	1.000	0.000
31	310057	33268	33708	33714	33713	50	0.300		0.000	1.000	0.000
31	310058	33708	33483	33711	33714	50	0.300		0.000	1.000	0.000
31	310059	33711	33223	33712	33714	50	0.300		0.000	1.000	0.000
31	310060	33712	1804	33713	33714	50	0.300		0.000	1.000	0.000

SOFiSTiK AG - www.sofistik.de

Composite bridge 38+50+38, b=14.25m, 2x2HL1100R HISTAR460 , slab 0.30m C30/37

Flat Elements

Grp	Number	Node	Node	Node	Node	Mat	t[m]	C[kN/m3]	direction	local x	
31	310061	1904	33715	33719	33718	50	0.300		0.000	1.000	0.000
31	310062	33715	33225	33716	33719	50	0.300		0.000	1.000	0.000
31	310063	33716	33222	33717	33719	50	0.300		0.000	1.000	0.000
31	310064	33717	33282	33718	33719	50	0.300		0.000	1.000	0.000
31	310065	33218	33720	33721	33707	50	0.300		0.000	1.000	0.000
31	310066	33720	33219	33702	33721	50	0.300		0.000	1.000	0.000
31	310067	33702	33223	33711	33721	50	0.300		0.000	1.000	0.000
31	310068	33711	33483	33707	33721	50	0.300		0.000	1.000	0.000
31	310069	33225	33698	33723	33716	50	0.300		0.000	1.000	0.000
31	310070	33221	33722	33723	33698	50	0.300		0.000	1.000	0.000
31	310071	33222	33716	33723	33722	50	0.300		0.000	1.000	0.000
31	310072	1903	33724	33726	33725	50	0.300		0.000	1.000	0.000
31	310073	33282	33717	33726	33724	50	0.300		0.000	1.000	0.000
31	310074	33222	33725	33726	33717	50	0.300		0.000	1.000	0.000
31	310075	33220	33727	33729	33703	50	0.300		1.000	0.000	0.000
31	310076	33727	33241	33693	33729	50	0.300		1.000	0.000	0.000
31	310077	33693	1108	33728	33729	50	0.300		1.000	0.000	0.000
31	310078	33728	33219	33703	33729	50	0.300		1.000	0.000	0.000
31	310079	33220	33697	33731	33727	50	0.300		1.000	0.000	0.000
31	310080	33697	33221	33730	33731	50	0.300		1.000	0.000	0.000
31	310081	33730	1208	33695	33731	50	0.300		1.000	0.000	0.000
31	310082	33695	33241	33727	33731	50	0.300		1.000	0.000	0.000
31	310083	1903	33732	33734	33725	50	0.300		1.000	0.000	0.000
31	310084	33732	1908	33673	33734	50	0.300		1.000	0.000	0.000
31	310085	33673	1208	33733	33734	50	0.300		1.000	0.000	0.000
31	310086	33733	33222	33725	33734	50	0.300		1.000	0.000	0.000
31	310087	1803	33706	33737	33736	50	0.300		1.000	0.000	0.000
31	310088	33706	33218	33735	33737	50	0.300		1.000	0.000	0.000
31	310089	33735	1108	33662	33737	50	0.300		1.000	0.000	0.000
31	310090	33662	1808	33736	33737	50	0.300		1.000	0.000	0.000
31	310091	33219	33728	33738	33720	50	0.300		1.000	0.000	0.000
31	310092	1108	33735	33738	33728	50	0.300		1.000	0.000	0.000
31	310093	33218	33720	33738	33735	50	0.300		1.000	0.000	0.000
31	310094	33221	33722	33739	33730	50	0.300		1.000	0.000	0.000
31	310095	33222	33733	33739	33722	50	0.300		1.000	0.000	0.000
31	310096	1208	33730	33739	33733	50	0.300		1.000	0.000	0.000
34	340001	33651	34924	34928	34927	50	1.800		0.000	1.000	0.000
34	340002	34924	33455	34925	34928	50	1.800		0.000	1.000	0.000
34	340003	34925	33454	34926	34928	50	1.800		0.000	1.000	0.000
34	340004	34926	33653	34927	34928	50	1.800		0.000	1.000	0.000
34	340005	33651	34929	34932	34924	50	1.800		0.000	1.000	0.000
34	340006	34929	4108	34930	34932	50	1.800		0.000	1.000	0.000
34	340007	34930	4808	34931	34932	50	1.800		0.000	1.000	0.000
34	340008	34931	33455	34924	34932	50	1.800		0.000	1.000	0.000
34	340009	4807	34933	34936	34935	50	1.800		0.000	1.000	0.000
34	340010	34933	4107	34934	34936	50	1.800		0.000	1.000	0.000
34	340011	34934	33653	34926	34936	50	1.800		0.000	1.000	0.000
34	340012	34926	33454	34935	34936	50	1.800		0.000	1.000	0.000
34	340013	33651	34927	34940	34939	50	1.800		0.000	1.000	0.000
34	340014	34927	33653	34937	34940	50	1.800		0.000	1.000	0.000
34	340015	34937	33433	34938	34940	50	1.800		0.000	1.000	0.000
34	340016	34938	33652	34939	34940	50	1.800		0.000	1.000	0.000
34	340017	4908	34941	34945	34944	50	1.800		0.000	1.000	0.000
34	340018	34941	4208	34942	34945	50	1.800		0.000	1.000	0.000
34	340019	34942	33654	34943	34945	50	1.800		0.000	1.000	0.000
34	340020	34943	33459	34944	34945	50	1.800		0.000	1.000	0.000
34	340021	33434	34946	34949	34948	50	1.800		0.000	1.000	0.000
34	340022	34946	33651	34939	34949	50	1.800		0.000	1.000	0.000
34	340023	34939	33652	34947	34949	50	1.800		0.000	1.000	0.000
34	340024	34947	33654	34948	34949	50	1.800		0.000	1.000	0.000
34	340025	4907	34950	34954	34953	50	1.800		0.000	1.000	0.000
34	340026	34950	33458	34951	34954	50	1.800		0.000	1.000	0.000
34	340027	34951	33652	34952	34954	50	1.800		0.000	1.000	0.000
34	340028	34952	4207	34953	34954	50	1.800		0.000	1.000	0.000
34	340029	33459	34943	34956	34955	50	1.800		0.000	1.000	0.000

SOFiSTiK AG - www.sofistik.de

Composite bridge 38+50+38, b=14.25m, 2x2HL1100R HISTAR460 , slab 0.30m C30/37

Flat Elements

Grp	Number	Node	Node	Node	Node	Mat	t[m]	C[kN/m3]	direction	local x	
34	340030	34943	33654	34947	34956	50	1.800		0.000	1.000	0.000
34	340031	34947	33652	34951	34956	50	1.800		0.000	1.000	0.000
34	340032	34951	33458	34955	34956	50	1.800		0.000	1.000	0.000
34	340033	4207	34952	34958	34957	50	1.800		0.000	1.000	0.000
34	340034	33652	34938	34958	34952	50	1.800		0.000	1.000	0.000
34	340035	33433	34957	34958	34938	50	1.800		0.000	1.000	0.000
34	340036	4107	34959	34960	34934	50	1.800		0.000	1.000	0.000
34	340037	33433	34937	34960	34959	50	1.800		0.000	1.000	0.000
34	340038	33653	34934	34960	34937	50	1.800		0.000	1.000	0.000
34	340039	4108	34929	34962	34961	50	1.800		0.000	1.000	0.000
34	340040	33651	34946	34962	34929	50	1.800		0.000	1.000	0.000
34	340041	33434	34961	34962	34946	50	1.800		0.000	1.000	0.000
34	340042	4208	34963	34964	34942	50	1.800		0.000	1.000	0.000
34	340043	33434	34948	34964	34963	50	1.800		0.000	1.000	0.000
34	340044	33654	34942	34964	34948	50	1.800		0.000	1.000	0.000
34	340045	33422	34965	34969	34968	50	0.300		0.000	1.000	0.000
34	340046	34965	33423	34966	34969	50	0.300		0.000	1.000	0.000
34	340047	34966	33427	34967	34969	50	0.300		0.000	1.000	0.000
34	340048	34967	33426	34968	34969	50	0.300		0.000	1.000	0.000
34	340049	33425	34970	34973	34972	50	0.300		0.000	1.000	0.000
34	340050	34970	33421	34971	34973	50	0.300		0.000	1.000	0.000
34	340051	34971	33422	34968	34973	50	0.300		0.000	1.000	0.000
34	340052	34968	33426	34972	34973	50	0.300		0.000	1.000	0.000
34	340053	4803	34974	34978	34977	50	0.300		0.000	1.000	0.000
34	340054	34974	33420	34975	34978	50	0.300		0.000	1.000	0.000
34	340055	34975	33655	34976	34978	50	0.300		0.000	1.000	0.000
34	340056	34976	33453	34977	34978	50	0.300		0.000	1.000	0.000
34	340057	33453	34976	34982	34981	50	0.300		0.000	1.000	0.000
34	340058	34976	33655	34979	34982	50	0.300		0.000	1.000	0.000
34	340059	34979	33425	34980	34982	50	0.300		0.000	1.000	0.000
34	340060	34980	4804	34981	34982	50	0.300		0.000	1.000	0.000
34	340061	4904	34983	34987	34986	50	0.300		0.000	1.000	0.000
34	340062	34983	33427	34984	34987	50	0.300		0.000	1.000	0.000
34	340063	34984	33424	34985	34987	50	0.300		0.000	1.000	0.000
34	340064	34985	33457	34986	34987	50	0.300		0.000	1.000	0.000
34	340065	33420	34988	34989	34975	50	0.300		0.000	1.000	0.000
34	340066	34988	33421	34970	34989	50	0.300		0.000	1.000	0.000
34	340067	34970	33425	34979	34989	50	0.300		0.000	1.000	0.000
34	340068	34979	33655	34975	34989	50	0.300		0.000	1.000	0.000
34	340069	33427	34966	34991	34984	50	0.300		0.000	1.000	0.000
34	340070	33423	34990	34991	34966	50	0.300		0.000	1.000	0.000
34	340071	33424	34984	34991	34990	50	0.300		0.000	1.000	0.000
34	340072	4903	34992	34994	34993	50	0.300		0.000	1.000	0.000
34	340073	33457	34985	34994	34992	50	0.300		0.000	1.000	0.000
34	340074	33424	34993	34994	34985	50	0.300		0.000	1.000	0.000
34	340075	33422	34971	34997	34996	50	0.300		1.000	0.000	0.000
34	340076	34971	33421	34995	34997	50	0.300		1.000	0.000	0.000
34	340077	34995	4108	34961	34997	50	0.300		1.000	0.000	0.000
34	340078	34961	33434	34996	34997	50	0.300		1.000	0.000	0.000
34	340079	33422	34996	34999	34965	50	0.300		1.000	0.000	0.000
34	340080	34996	33434	34963	34999	50	0.300		1.000	0.000	0.000
34	340081	34963	4208	34998	34999	50	0.300		1.000	0.000	0.000
34	340082	34998	33423	34965	34999	50	0.300		1.000	0.000	0.000
34	340083	4903	34993	35002	35001	50	0.300		1.000	0.000	0.000
34	340084	34993	33424	35000	35002	50	0.300		1.000	0.000	0.000
34	340085	35000	4208	34941	35002	50	0.300		1.000	0.000	0.000
34	340086	34941	4908	35001	35002	50	0.300		1.000	0.000	0.000
34	340087	4803	35003	35005	34974	50	0.300		1.000	0.000	0.000
34	340088	35003	4808	34930	35005	50	0.300		1.000	0.000	0.000
34	340089	34930	4108	35004	35005	50	0.300		1.000	0.000	0.000
34	340090	35004	33420	34974	35005	50	0.300		1.000	0.000	0.000
34	340091	33423	34998	35006	34990	50	0.300		1.000	0.000	0.000
34	340092	4208	35000	35006	34998	50	0.300		1.000	0.000	0.000
34	340093	33424	34990	35006	35000	50	0.300		1.000	0.000	0.000
34	340094	33421	34988	35007	34995	50	0.300		1.000	0.000	0.000

SOFiSTiK AG - www.sofistik.de

Composite bridge 38+50+38, b=14.25m, 2x2HL1100R HISTAR460 , slab 0.30m C30/37

Flat Elements

Grp	Number	Node	Node	Node	Node	Mat	t[m]	C[kN/m3]	direction	local x	
34	340095	33420	35004	35007	34988	50	0.300		1.000	0.000	0.000
34	340096	4108	34995	35007	35004	50	0.300		1.000	0.000	0.000
81	810001	33236	33740	33744	33743	32	0.300+		1.000	0.000	0.000
81	810002	33740	33509	33741	33744	32	0.300+		1.000	0.000	0.000
81	810003	33741	33510	33742	33744	32	0.300+		1.000	0.000	0.000
81	810004	33742	33235	33743	33744	32	0.300+		1.000	0.000	0.000
81	810005	33236	33745	33748	33740	32	0.300+		1.000	0.000	0.000
81	810006	33745	33508	33746	33748	32	0.300+		1.000	0.000	0.000
81	810007	33746	33511	33747	33748	32	0.300+		1.000	0.000	0.000
81	810008	33747	33509	33740	33748	32	0.300+		1.000	0.000	0.000
81	810009	33500	33749	33753	33752	32	0.300+		1.000	0.000	0.000
81	810010	33749	33507	33750	33753	32	0.300+		1.000	0.000	0.000
81	810011	33750	33237	33751	33753	32	0.300+		1.000	0.000	0.000
81	810012	33751	33238	33752	33753	32	0.300+		1.000	0.000	0.000
81	810013	33500	33752	33757	33756	32	0.300+		1.000	0.000	0.000
81	810014	33752	33238	33754	33757	32	0.300+		1.000	0.000	0.000
81	810015	33754	33239	33755	33757	32	0.300+		1.000	0.000	0.000
81	810016	33755	33499	33756	33757	32	0.300+		1.000	0.000	0.000
81	810017	33295	33758	33762	33761	32	0.300+		1.000	0.000	0.000
81	810018	33758	2110	33759	33762	32	0.300+		1.000	0.000	0.000
81	810019	33759	1117	33760	33762	32	0.300+		1.000	0.000	0.000
81	810020	33760	33491	33761	33762	32	0.300+		1.000	0.000	0.000
81	810021	1210	33763	33766	33765	32	0.300+		1.000	0.000	0.000
81	810022	33763	1211	33764	33766	32	0.300+		1.000	0.000	0.000
81	810023	33764	33499	33755	33766	32	0.300+		1.000	0.000	0.000
81	810024	33755	33239	33765	33766	32	0.300+		1.000	0.000	0.000
81	810025	33497	33767	33771	33770	32	0.300+		1.000	0.000	0.000
81	810026	33767	33498	33768	33771	32	0.300+		1.000	0.000	0.000
81	810027	33768	33484	33769	33771	32	0.300+		1.000	0.000	0.000
81	810028	33769	33495	33770	33771	32	0.300+		1.000	0.000	0.000
81	810029	33490	33772	33776	33775	32	0.300+		1.000	0.000	0.000
81	810030	33772	33298	33773	33776	32	0.300+		1.000	0.000	0.000
81	810031	33773	33492	33774	33776	32	0.300+		1.000	0.000	0.000
81	810032	33774	33485	33775	33776	32	0.300+		1.000	0.000	0.000
81	810033	33503	33777	33781	33780	32	0.300+		1.000	0.000	0.000
81	810034	33777	21212	33778	33781	32	0.300+		1.000	0.000	0.000
81	810035	33778	1212	33779	33781	32	0.300+		1.000	0.000	0.000
81	810036	33779	33502	33780	33781	32	0.300+		1.000	0.000	0.000
81	810037	33242	33782	33785	33784	32	0.300+		1.000	0.000	0.000
81	810038	33782	33509	33747	33785	32	0.300+		1.000	0.000	0.000
81	810039	33747	33511	33783	33785	32	0.300+		1.000	0.000	0.000
81	810040	33783	33243	33784	33785	32	0.300+		1.000	0.000	0.000
81	810041	33497	33786	33789	33767	32	0.300+		1.000	0.000	0.000
81	810042	33786	33493	33787	33789	32	0.300+		1.000	0.000	0.000
81	810043	33787	1213	33788	33789	32	0.300+		1.000	0.000	0.000
81	810044	33788	33498	33767	33789	32	0.300+		1.000	0.000	0.000
81	810045	33500	33790	33793	33749	32	0.300+		1.000	0.000	0.000
81	810046	33790	33501	33791	33793	32	0.300+		1.000	0.000	0.000
81	810047	33791	33512	33792	33793	32	0.300+		1.000	0.000	0.000
81	810048	33792	33507	33749	33793	32	0.300+		1.000	0.000	0.000
81	810049	33491	33794	33798	33797	32	0.300+		1.000	0.000	0.000
81	810050	33794	33487	33795	33798	32	0.300+		1.000	0.000	0.000
81	810051	33795	33492	33796	33798	32	0.300+		1.000	0.000	0.000
81	810052	33796	33296	33797	33798	32	0.300+		1.000	0.000	0.000
81	810053	33507	33799	33801	33750	32	0.300+		1.000	0.000	0.000
81	810054	33799	33508	33745	33801	32	0.300+		1.000	0.000	0.000
81	810055	33745	33236	33800	33801	32	0.300+		1.000	0.000	0.000
81	810056	33800	33237	33750	33801	32	0.300+		1.000	0.000	0.000
81	810057	33243	33783	33805	33804	32	0.300+		1.000	0.000	0.000
81	810058	33783	33511	33802	33805	32	0.300+		1.000	0.000	0.000
81	810059	33802	33512	33803	33805	32	0.300+		1.000	0.000	0.000
81	810060	33803	33244	33804	33805	32	0.300+		1.000	0.000	0.000
81	810061	33466	33806	33810	33809	32	0.300+		1.000	0.000	0.000
81	810062	33806	1214	33807	33810	32	0.300+		1.000	0.000	0.000
81	810063	33807	33299	33808	33810	32	0.300+		1.000	0.000	0.000

SOFiSTiK AG - www.sofistik.de

Composite bridge 38+50+38, b=14.25m, 2x2HL1100R HISTAR460 , slab 0.30m C30/37

Flat Elements

Grp	Number	Node	Node	Node	Node	Mat	t[m]	C[kN/m3]	direction	local x	
81	810064	33808	33490	33809	33810	32	0.300+		1.000	0.000	0.000
81	810065	33466	33809	33814	33813	32	0.300+		1.000	0.000	0.000
81	810066	33809	33490	33811	33814	32	0.300+		1.000	0.000	0.000
81	810067	33811	33484	33812	33814	32	0.300+		1.000	0.000	0.000
81	810068	33812	33465	33813	33814	32	0.300+		1.000	0.000	0.000
81	810069	33257	33815	33819	33818	32	0.300+		1.000	0.000	0.000
81	810070	33815	33494	33816	33819	32	0.300+		1.000	0.000	0.000
81	810071	33816	33505	33817	33819	32	0.300+		1.000	0.000	0.000
81	810072	33817	33256	33818	33819	32	0.300+		1.000	0.000	0.000
81	810073	1116	33820	33824	33823	32	0.300+		1.000	0.000	0.000
81	810074	33820	33494	33821	33824	32	0.300+		1.000	0.000	0.000
81	810075	33821	33496	33822	33824	32	0.300+		1.000	0.000	0.000
81	810076	33822	33217	33823	33824	32	0.300+		1.000	0.000	0.000
81	810077	33216	33825	33827	33826	32	0.300+		1.000	0.000	0.000
81	810078	33825	33505	33816	33827	32	0.300+		1.000	0.000	0.000
81	810079	33816	33494	33820	33827	32	0.300+		1.000	0.000	0.000
81	810080	33820	1116	33826	33827	32	0.300+		1.000	0.000	0.000
81	810081	1112	33828	33832	33831	32	0.300+		1.000	0.000	0.000
81	810082	33828	21112	33829	33832	32	0.300+		1.000	0.000	0.000
81	810083	33829	33501	33830	33832	32	0.300+		1.000	0.000	0.000
81	810084	33830	33502	33831	33832	32	0.300+		1.000	0.000	0.000
81	810085	1114	33833	33837	33836	32	0.300+		1.000	0.000	0.000
81	810086	33833	33464	33834	33837	32	0.300+		1.000	0.000	0.000
81	810087	33834	33488	33835	33837	32	0.300+		1.000	0.000	0.000
81	810088	33835	33489	33836	33837	32	0.300+		1.000	0.000	0.000
81	810089	33463	33838	33842	33841	32	0.300+		1.000	0.000	0.000
81	810090	33838	33462	33839	33842	32	0.300+		1.000	0.000	0.000
81	810091	33839	33486	33840	33842	32	0.300+		1.000	0.000	0.000
81	810092	33840	33487	33841	33842	32	0.300+		1.000	0.000	0.000
81	810093	33461	33843	33847	33846	32	0.300+		1.000	0.000	0.000
81	810094	33843	33460	33844	33847	32	0.300+		1.000	0.000	0.000
81	810095	33844	33495	33845	33847	32	0.300+		1.000	0.000	0.000
81	810096	33845	33485	33846	33847	32	0.300+		1.000	0.000	0.000
81	810097	1110	33848	33851	33850	32	0.300+		1.000	0.000	0.000
81	810098	33848	33235	33742	33851	32	0.300+		1.000	0.000	0.000
81	810099	33742	33510	33849	33851	32	0.300+		1.000	0.000	0.000
81	810100	33849	33215	33850	33851	32	0.300+		1.000	0.000	0.000
81	810101	33505	33825	33855	33854	32	0.300+		1.000	0.000	0.000
81	810102	33825	33216	33852	33855	32	0.300+		1.000	0.000	0.000
81	810103	33852	1112	33853	33855	32	0.300+		1.000	0.000	0.000
81	810104	33853	33506	33854	33855	32	0.300+		1.000	0.000	0.000
81	810105	1211	33856	33859	33764	32	0.300+		1.000	0.000	0.000
81	810106	33856	33254	33857	33859	32	0.300+		1.000	0.000	0.000
81	810107	33857	33504	33858	33859	32	0.300+		1.000	0.000	0.000
81	810108	33858	33499	33764	33859	32	0.300+		1.000	0.000	0.000
81	810109	33503	33860	33862	33861	32	0.300+		1.000	0.000	0.000
81	810110	33860	33500	33756	33862	32	0.300+		1.000	0.000	0.000
81	810111	33756	33499	33858	33862	32	0.300+		1.000	0.000	0.000
81	810112	33858	33504	33861	33862	32	0.300+		1.000	0.000	0.000
81	810113	33506	33863	33865	33854	32	0.300+		1.000	0.000	0.000
81	810114	33863	33255	33864	33865	32	0.300+		1.000	0.000	0.000
81	810115	33864	33256	33817	33865	32	0.300+		1.000	0.000	0.000
81	810116	33817	33505	33854	33865	32	0.300+		1.000	0.000	0.000
81	810117	33512	33791	33868	33867	32	0.300+		1.000	0.000	0.000
81	810118	33791	33501	33829	33868	32	0.300+		1.000	0.000	0.000
81	810119	33829	21112	33866	33868	32	0.300+		1.000	0.000	0.000
81	810120	33866	33245	33867	33868	32	0.300+		1.000	0.000	0.000
81	810121	33462	33869	33871	33839	32	0.300+		1.000	0.000	0.000
81	810122	33869	33461	33846	33871	32	0.300+		1.000	0.000	0.000
81	810123	33846	33485	33870	33871	32	0.300+		1.000	0.000	0.000
81	810124	33870	33486	33839	33871	32	0.300+		1.000	0.000	0.000
81	810125	33502	33779	33874	33873	32	0.300+		1.000	0.000	0.000
81	810126	33779	1212	33872	33874	32	0.300+		1.000	0.000	0.000
81	810127	33872	33255	33863	33874	32	0.300+		1.000	0.000	0.000
81	810128	33863	33506	33873	33874	32	0.300+		1.000	0.000	0.000

SOFiSTiK AG - www.sofistik.de

Composite bridge 38+50+38, b=14.25m, 2x2HL1100R HISTAR460 , slab 0.30m C30/37

Flat Elements

Grp	Number	Node	Node	Node	Node	Mat	t[m]	C[kN/m3]	direction	local x	
81	810129	33495	33875	33878	33770	32	0.300+		1.000	0.000	0.000
81	810130	33875	21113	33876	33878	32	0.300+		1.000	0.000	0.000
81	810131	33876	1113	33877	33878	32	0.300+		1.000	0.000	0.000
81	810132	33877	33497	33770	33878	32	0.300+		1.000	0.000	0.000
81	810133	33465	33812	33881	33880	32	0.300+		1.000	0.000	0.000
81	810134	33812	33484	33768	33881	32	0.300+		1.000	0.000	0.000
81	810135	33768	33498	33879	33881	32	0.300+		1.000	0.000	0.000
81	810136	33879	21213	33880	33881	32	0.300+		1.000	0.000	0.000
81	810137	33464	33882	33884	33834	32	0.300+		1.000	0.000	0.000
81	810138	33882	33463	33841	33884	32	0.300+		1.000	0.000	0.000
81	810139	33841	33487	33883	33884	32	0.300+		1.000	0.000	0.000
81	810140	33883	33488	33834	33884	32	0.300+		1.000	0.000	0.000
81	810141	33496	33821	33887	33886	32	0.300+		1.000	0.000	0.000
81	810142	33821	33494	33815	33887	32	0.300+		1.000	0.000	0.000
81	810143	33815	33257	33885	33887	32	0.300+		1.000	0.000	0.000
81	810144	33885	33493	33886	33887	32	0.300+		1.000	0.000	0.000
81	810145	33491	33760	33890	33889	32	0.300+		1.000	0.000	0.000
81	810146	33760	1117	33888	33890	32	0.300+		1.000	0.000	0.000
81	810147	33888	1114	33836	33890	32	0.300+		1.000	0.000	0.000
81	810148	33836	33489	33889	33890	32	0.300+		1.000	0.000	0.000
81	810149	1111	33891	33893	33892	32	0.300+		1.000	0.000	0.000
81	810150	33891	33510	33741	33893	32	0.300+		1.000	0.000	0.000
81	810151	33741	33509	33782	33893	32	0.300+		1.000	0.000	0.000
81	810152	33782	33242	33892	33893	32	0.300+		1.000	0.000	0.000
81	810153	1113	33894	33895	33877	32	0.300+		1.000	0.000	0.000
81	810154	33894	33496	33886	33895	32	0.300+		1.000	0.000	0.000
81	810155	33886	33493	33786	33895	32	0.300+		1.000	0.000	0.000
81	810156	33786	33497	33877	33895	32	0.300+		1.000	0.000	0.000
81	810157	33500	33860	33896	33790	32	0.300+		1.000	0.000	0.000
81	810158	33860	33503	33780	33896	32	0.300+		1.000	0.000	0.000
81	810159	33780	33502	33830	33896	32	0.300+		1.000	0.000	0.000
81	810160	33830	33501	33790	33896	32	0.300+		1.000	0.000	0.000
81	810161	33508	33799	33897	33746	32	0.300+		1.000	0.000	0.000
81	810162	33799	33507	33792	33897	32	0.300+		1.000	0.000	0.000
81	810163	33792	33512	33802	33897	32	0.300+		1.000	0.000	0.000
81	810164	33802	33511	33746	33897	32	0.300+		1.000	0.000	0.000
81	810165	33490	33775	33898	33811	32	0.300+		1.000	0.000	0.000
81	810166	33775	33485	33845	33898	32	0.300+		1.000	0.000	0.000
81	810167	33845	33495	33769	33898	32	0.300+		1.000	0.000	0.000
81	810168	33769	33484	33811	33898	32	0.300+		1.000	0.000	0.000
81	810169	33489	33835	33488	33899	32	0.300+		1.000	0.000	0.000
81	810170	33899	33491	33889	33489	32	0.300+		1.000	0.000	0.000
81	810171	33295	33761	33901	33900	32	0.300+		1.000	0.000	0.000
81	810172	33491	33797	33901	33761	32	0.300+		1.000	0.000	0.000
81	810173	33296	33900	33901	33797	32	0.300+		1.000	0.000	0.000
81	810174	33488	33883	33902	33899	32	0.300+		1.000	0.000	0.000
81	810175	33487	33794	33902	33883	32	0.300+		1.000	0.000	0.000
81	810176	33491	33899	33902	33794	32	0.300+		1.000	0.000	0.000
81	810177	33486	33903	33904	33840	32	0.300+		1.000	0.000	0.000
81	810178	33492	33795	33904	33903	32	0.300+		1.000	0.000	0.000
81	810179	33487	33840	33904	33795	32	0.300+		1.000	0.000	0.000
81	810180	33297	33905	33907	33906	32	0.300+		1.000	0.000	0.000
81	810181	33296	33796	33907	33905	32	0.300+		1.000	0.000	0.000
81	810182	33492	33906	33907	33796	32	0.300+		1.000	0.000	0.000
81	810183	33298	33772	33909	33908	32	0.300+		1.000	0.000	0.000
81	810184	33490	33808	33909	33772	32	0.300+		1.000	0.000	0.000
81	810185	33299	33908	33909	33808	32	0.300+		1.000	0.000	0.000
81	810186	2210	33910	33912	33911	32	0.300+		1.000	0.000	0.000
81	810187	33299	33807	33912	33910	32	0.300+		1.000	0.000	0.000
81	810188	1214	33911	33912	33807	32	0.300+		1.000	0.000	0.000
81	810189	33297	33906	33914	33913	32	0.300+		1.000	0.000	0.000
81	810190	33492	33773	33914	33906	32	0.300+		1.000	0.000	0.000
81	810191	33298	33913	33914	33773	32	0.300+		1.000	0.000	0.000
81	810192	33486	33870	33915	33903	32	0.300+		1.000	0.000	0.000
81	810193	33485	33774	33915	33870	32	0.300+		1.000	0.000	0.000

SOFiSTiK AG - www.sofistik.de

Composite bridge 38+50+38, b=14.25m, 2x2HL1100R HISTAR460 , slab 0.30m C30/37

Flat Elements

Grp	Number	Node	Node	Node	Node	Mat	t[m]	C[kN/m3]	direction	local x	
81	810194	33492	33903	33915	33774	32	0.300+		1.000	0.000	0.000
81	810195	1113	33916	33917	33894	32	0.300+		1.000	0.000	0.000
81	810196	33217	33822	33917	33916	32	0.300+		1.000	0.000	0.000
81	810197	33496	33894	33917	33822	32	0.300+		1.000	0.000	0.000
81	810198	21213	33879	33919	33918	32	0.300+		1.000	0.000	0.000
81	810199	33498	33788	33919	33879	32	0.300+		1.000	0.000	0.000
81	810200	1213	33918	33919	33788	32	0.300+		1.000	0.000	0.000
81	810201	21113	33875	33921	33920	32	0.300+		1.000	0.000	0.000
81	810202	33495	33844	33921	33875	32	0.300+		1.000	0.000	0.000
81	810203	33460	33920	33921	33844	32	0.300+		1.000	0.000	0.000
81	810204	1213	33787	33923	33922	32	0.300+		1.000	0.000	0.000
81	810205	33493	33885	33923	33787	32	0.300+		1.000	0.000	0.000
81	810206	33257	33922	33923	33885	32	0.300+		1.000	0.000	0.000
81	810207	33254	33924	33926	33857	32	0.300+		1.000	0.000	0.000
81	810208	21212	33925	33926	33924	32	0.300+		1.000	0.000	0.000
81	810209	33504	33857	33926	33925	32	0.300+		1.000	0.000	0.000
81	810210	33504	33925	33927	33861	32	0.300+		1.000	0.000	0.000
81	810211	21212	33777	33927	33925	32	0.300+		1.000	0.000	0.000
81	810212	33503	33861	33927	33777	32	0.300+		1.000	0.000	0.000
81	810213	33502	33873	33928	33831	32	0.300+		1.000	0.000	0.000
81	810214	33506	33853	33928	33873	32	0.300+		1.000	0.000	0.000
81	810215	1112	33831	33928	33853	32	0.300+		1.000	0.000	0.000
81	810216	1115	33929	33931	33930	32	0.300+		1.000	0.000	0.000
81	810217	33510	33891	33931	33929	32	0.300+		1.000	0.000	0.000
81	810218	1111	33930	33931	33891	32	0.300+		1.000	0.000	0.000
81	810219	33244	33803	33933	33932	32	0.300+		1.000	0.000	0.000
81	810220	33512	33867	33933	33803	32	0.300+		1.000	0.000	0.000
81	810221	33245	33932	33933	33867	32	0.300+		1.000	0.000	0.000
81	810222	1115	33934	33935	33929	32	0.300+		1.000	0.000	0.000
81	810223	33215	33849	33935	33934	32	0.300+		1.000	0.000	0.000
81	810224	33510	33929	33935	33849	32	0.300+		1.000	0.000	0.000
81	810225	1112	33936	33939	33828	32	0.300+		1.000	0.000	0.000
81	810226	33936	1812	33937	33939	32	0.300+		1.000	0.000	0.000
81	810227	33937	33273	33938	33939	32	0.300+		1.000	0.000	0.000
81	810228	33938	21112	33828	33939	32	0.300+		1.000	0.000	0.000
81	810229	1113	33940	33943	33916	32	0.300+		1.000	0.000	0.000
81	810230	33940	1813	33941	33943	32	0.300+		1.000	0.000	0.000
81	810231	33941	33276	33942	33943	32	0.300+		1.000	0.000	0.000
81	810232	33942	33217	33916	33943	32	0.300+		1.000	0.000	0.000
81	810233	1812	33936	33946	33945	32	0.300+		1.000	0.000	0.000
81	810234	33936	1112	33852	33946	32	0.300+		1.000	0.000	0.000
81	810235	33852	33216	33944	33946	32	0.300+		1.000	0.000	0.000
81	810236	33944	33274	33945	33946	32	0.300+		1.000	0.000	0.000
81	810237	33460	33843	33950	33949	32	0.300+		1.000	0.000	0.000
81	810238	33843	33461	33947	33950	32	0.300+		1.000	0.000	0.000
81	810239	33947	33279	33948	33950	32	0.300+		1.000	0.000	0.000
81	810240	33948	33278	33949	33950	32	0.300+		1.000	0.000	0.000
81	810241	1813	33940	33953	33952	32	0.300+		1.000	0.000	0.000
81	810242	33940	1113	33876	33953	32	0.300+		1.000	0.000	0.000
81	810243	33876	21113	33951	33953	32	0.300+		1.000	0.000	0.000
81	810244	33951	33277	33952	33953	32	0.300+		1.000	0.000	0.000
81	810245	33460	33949	33955	33920	32	0.300+		1.000	0.000	0.000
81	810246	33949	33278	33954	33955	32	0.300+		1.000	0.000	0.000
81	810247	33954	33277	33951	33955	32	0.300+		1.000	0.000	0.000
81	810248	33951	21113	33920	33955	32	0.300+		1.000	0.000	0.000
81	810249	1110	33850	33959	33958	32	0.300+		1.000	0.000	0.000
81	810250	33850	33215	33956	33959	32	0.300+		1.000	0.000	0.000
81	810251	33956	33522	33957	33959	32	0.300+		1.000	0.000	0.000
81	810252	33957	33267	33958	33959	32	0.300+		1.000	0.000	0.000
81	810253	1814	33960	33964	33963	32	0.300+		1.000	0.000	0.000
81	810254	33960	33516	33961	33964	32	0.300+		1.000	0.000	0.000
81	810255	33961	33331	33962	33964	32	0.300+		1.000	0.000	0.000
81	810256	33962	2810	33963	33964	32	0.300+		1.000	0.000	0.000
81	810257	1811	33965	33969	33968	32	0.300+		1.000	0.000	0.000
81	810258	33965	1810	33966	33969	32	0.300+		1.000	0.000	0.000

SOFiSTiK AG - www.sofistik.de

Composite bridge 38+50+38, b=14.25m, 2x2HL1100R HISTAR460 , slab 0.30m C30/37

Flat Elements

Grp	Number	Node	Node	Node	Node	Mat	t[m]	C[kN/m3]	direction	local x	
81	810259	33966	33266	33967	33969	32	0.300+		1.000	0.000	0.000
81	810260	33967	33520	33968	33969	32	0.300+		1.000	0.000	0.000
81	810261	33275	33970	33972	33971	32	0.300+		1.000	0.000	0.000
81	810262	33970	1116	33823	33972	32	0.300+		1.000	0.000	0.000
81	810263	33823	33217	33942	33972	32	0.300+		1.000	0.000	0.000
81	810264	33942	33276	33971	33972	32	0.300+		1.000	0.000	0.000
81	810265	1116	33970	33974	33826	32	0.300+		1.000	0.000	0.000
81	810266	33970	33275	33973	33974	32	0.300+		1.000	0.000	0.000
81	810267	33973	33274	33944	33974	32	0.300+		1.000	0.000	0.000
81	810268	33944	33216	33826	33974	32	0.300+		1.000	0.000	0.000
81	810269	33531	33975	33979	33978	32	0.300+		1.000	0.000	0.000
81	810270	33975	33524	33976	33979	32	0.300+		1.000	0.000	0.000
81	810271	33976	33272	33977	33979	32	0.300+		1.000	0.000	0.000
81	810272	33977	33530	33978	33979	32	0.300+		1.000	0.000	0.000
81	810273	33242	33784	33983	33982	32	0.300+		1.000	0.000	0.000
81	810274	33784	33243	33980	33983	32	0.300+		1.000	0.000	0.000
81	810275	33980	33528	33981	33983	32	0.300+		1.000	0.000	0.000
81	810276	33981	33525	33982	33983	32	0.300+		1.000	0.000	0.000
81	810277	1111	33892	33986	33985	32	0.300+		1.000	0.000	0.000
81	810278	33892	33242	33982	33986	32	0.300+		1.000	0.000	0.000
81	810279	33982	33525	33984	33986	32	0.300+		1.000	0.000	0.000
81	810280	33984	33523	33985	33986	32	0.300+		1.000	0.000	0.000
81	810281	33528	33987	33991	33990	32	0.300+		1.000	0.000	0.000
81	810282	33987	33244	33988	33991	32	0.300+		1.000	0.000	0.000
81	810283	33988	33531	33989	33991	32	0.300+		1.000	0.000	0.000
81	810284	33989	33529	33990	33991	32	0.300+		1.000	0.000	0.000
81	810285	33462	33838	33995	33994	32	0.300+		1.000	0.000	0.000
81	810286	33838	33463	33992	33995	32	0.300+		1.000	0.000	0.000
81	810287	33992	33519	33993	33995	32	0.300+		1.000	0.000	0.000
81	810288	33993	33518	33994	33995	32	0.300+		1.000	0.000	0.000
81	810289	33266	33996	33999	33967	32	0.300+		1.000	0.000	0.000
81	810290	33996	33521	33997	33999	32	0.300+		1.000	0.000	0.000
81	810291	33997	33527	33998	33999	32	0.300+		1.000	0.000	0.000
81	810292	33998	33520	33967	33999	32	0.300+		1.000	0.000	0.000
81	810293	33523	33984	34003	34002	32	0.300+		1.000	0.000	0.000
81	810294	33984	33525	34000	34003	32	0.300+		1.000	0.000	0.000
81	810295	34000	33526	34001	34003	32	0.300+		1.000	0.000	0.000
81	810296	34001	33522	34002	34003	32	0.300+		1.000	0.000	0.000
81	810297	1114	34004	34007	33833	32	0.300+		1.000	0.000	0.000
81	810298	34004	33513	34005	34007	32	0.300+		1.000	0.000	0.000
81	810299	34005	33519	34006	34007	32	0.300+		1.000	0.000	0.000
81	810300	34006	33464	33833	34007	32	0.300+		1.000	0.000	0.000
81	810301	33525	33981	34009	34000	32	0.300+		1.000	0.000	0.000
81	810302	33981	33528	33990	34009	32	0.300+		1.000	0.000	0.000
81	810303	33990	33529	34008	34009	32	0.300+		1.000	0.000	0.000
81	810304	34008	33526	34000	34009	32	0.300+		1.000	0.000	0.000
81	810305	33517	34010	34013	34012	32	0.300+		1.000	0.000	0.000
81	810306	34010	33514	34011	34013	32	0.300+		1.000	0.000	0.000
81	810307	34011	33519	34005	34013	32	0.300+		1.000	0.000	0.000
81	810308	34005	33513	34012	34013	32	0.300+		1.000	0.000	0.000
81	810309	33279	34014	34018	34017	32	0.300+		1.000	0.000	0.000
81	810310	34014	33518	34015	34018	32	0.300+		1.000	0.000	0.000
81	810311	34015	33516	34016	34018	32	0.300+		1.000	0.000	0.000
81	810312	34016	33280	34017	34018	32	0.300+		1.000	0.000	0.000
81	810313	1117	33759	34022	34021	32	0.300+		1.000	0.000	0.000
81	810314	33759	2110	34019	34022	32	0.300+		1.000	0.000	0.000
81	810315	34019	33332	34020	34022	32	0.300+		1.000	0.000	0.000
81	810316	34020	33517	34021	34022	32	0.300+		1.000	0.000	0.000
81	810317	1811	33968	34025	34024	32	0.300+		1.000	0.000	0.000
81	810318	33968	33520	33998	34025	32	0.300+		1.000	0.000	0.000
81	810319	33998	33527	34023	34025	32	0.300+		1.000	0.000	0.000
81	810320	34023	33271	34024	34025	32	0.300+		1.000	0.000	0.000
81	810321	33531	33978	34028	33989	32	0.300+		1.000	0.000	0.000
81	810322	33978	33530	34026	34028	32	0.300+		1.000	0.000	0.000
81	810323	34026	33527	34027	34028	32	0.300+		1.000	0.000	0.000

SOFiSTiK AG - www.sofistik.de

Composite bridge 38+50+38, b=14.25m, 2x2HL1100R HISTAR460 , slab 0.30m C30/37

Flat Elements

Grp	Number	Node	Node	Node	Node	Mat	t[m]	C[kN/m3]	direction	local x	
81	810324	34027	33529	33989	34028	32	0.300+		1.000	0.000	0.000
81	810325	33517	34020	34031	34010	32	0.300+		1.000	0.000	0.000
81	810326	34020	33332	34029	34031	32	0.300+		1.000	0.000	0.000
81	810327	34029	33515	34030	34031	32	0.300+		1.000	0.000	0.000
81	810328	34030	33514	34010	34031	32	0.300+		1.000	0.000	0.000
81	810329	33267	33957	34034	34033	32	0.300+		1.000	0.000	0.000
81	810330	33957	33522	34001	34034	32	0.300+		1.000	0.000	0.000
81	810331	34001	33526	34032	34034	32	0.300+		1.000	0.000	0.000
81	810332	34032	33521	34033	34034	32	0.300+		1.000	0.000	0.000
81	810333	1114	33888	34035	34004	32	0.300+		1.000	0.000	0.000
81	810334	33888	1117	34021	34035	32	0.300+		1.000	0.000	0.000
81	810335	34021	33517	34012	34035	32	0.300+		1.000	0.000	0.000
81	810336	34012	33513	34004	34035	32	0.300+		1.000	0.000	0.000
81	810337	33273	34036	34038	33938	32	0.300+		1.000	0.000	0.000
81	810338	34036	33524	34037	34038	32	0.300+		1.000	0.000	0.000
81	810339	34037	33245	33866	34038	32	0.300+		1.000	0.000	0.000
81	810340	33866	21112	33938	34038	32	0.300+		1.000	0.000	0.000
81	810341	33519	34039	34041	33993	32	0.300+		1.000	0.000	0.000
81	810342	34039	33515	34040	34041	32	0.300+		1.000	0.000	0.000
81	810343	34040	33516	34015	34041	32	0.300+		1.000	0.000	0.000
81	810344	34015	33518	33993	34041	32	0.300+		1.000	0.000	0.000
81	810345	33244	33932	34042	33988	32	0.300+		1.000	0.000	0.000
81	810346	33932	33245	34037	34042	32	0.300+		1.000	0.000	0.000
81	810347	34037	33524	33975	34042	32	0.300+		1.000	0.000	0.000
81	810348	33975	33531	33988	34042	32	0.300+		1.000	0.000	0.000
81	810349	1115	34043	34044	33934	32	0.300+		1.000	0.000	0.000
81	810350	34043	33523	34002	34044	32	0.300+		1.000	0.000	0.000
81	810351	34002	33522	33956	34044	32	0.300+		1.000	0.000	0.000
81	810352	33956	33215	33934	34044	32	0.300+		1.000	0.000	0.000
81	810353	33272	34045	34046	33977	32	0.300+		1.000	0.000	0.000
81	810354	34045	33271	34023	34046	32	0.300+		1.000	0.000	0.000
81	810355	34023	33527	34026	34046	32	0.300+		1.000	0.000	0.000
81	810356	34026	33530	33977	34046	32	0.300+		1.000	0.000	0.000
81	810357	33462	33994	34047	33869	32	0.300+		1.000	0.000	0.000
81	810358	33994	33518	34014	34047	32	0.300+		1.000	0.000	0.000
81	810359	34014	33279	33947	34047	32	0.300+		1.000	0.000	0.000
81	810360	33947	33461	33869	34047	32	0.300+		1.000	0.000	0.000
81	810361	33529	34027	34048	34008	32	0.300+		1.000	0.000	0.000
81	810362	34027	33527	33997	34048	32	0.300+		1.000	0.000	0.000
81	810363	33997	33521	34032	34048	32	0.300+		1.000	0.000	0.000
81	810364	34032	33526	34008	34048	32	0.300+		1.000	0.000	0.000
81	810365	33516	34040	34050	33961	32	0.300+		1.000	0.000	0.000
81	810366	34040	33515	34029	34050	32	0.300+		1.000	0.000	0.000
81	810367	34029	33332	34049	34050	32	0.300+		1.000	0.000	0.000
81	810368	34049	33331	33961	34050	32	0.300+		1.000	0.000	0.000
81	810369	33463	33882	34051	33992	32	0.300+		1.000	0.000	0.000
81	810370	33464	34006	34051	33882	32	0.300+		1.000	0.000	0.000
81	810371	33519	33992	34051	34006	32	0.300+		1.000	0.000	0.000
81	810372	33514	34030	33515	34039	32	0.300+		1.000	0.000	0.000
81	810373	34039	33519	34011	33514	32	0.300+		1.000	0.000	0.000
81	810374	1814	34052	34053	33960	32	0.300+		1.000	0.000	0.000
81	810375	33280	34016	34053	34052	32	0.300+		1.000	0.000	0.000
81	810376	33516	33960	34053	34016	32	0.300+		1.000	0.000	0.000
81	810377	33266	34054	34055	33996	32	0.300+		1.000	0.000	0.000
81	810378	33267	34033	34055	34054	32	0.300+		1.000	0.000	0.000
81	810379	33521	33996	34055	34033	32	0.300+		1.000	0.000	0.000
81	810380	1111	33985	34056	33930	32	0.300+		1.000	0.000	0.000
81	810381	33523	34043	34056	33985	32	0.300+		1.000	0.000	0.000
81	810382	1115	33930	34056	34043	32	0.300+		1.000	0.000	0.000
81	810383	33272	33976	34058	34057	32	0.300+		1.000	0.000	0.000
81	810384	33524	34036	34058	33976	32	0.300+		1.000	0.000	0.000
81	810385	33273	34057	34058	34036	32	0.300+		1.000	0.000	0.000
81	810386	33243	33804	34059	33980	32	0.300+		1.000	0.000	0.000
81	810387	33244	33987	34059	33804	32	0.300+		1.000	0.000	0.000
81	810388	33528	33980	34059	33987	32	0.300+		1.000	0.000	0.000

SOFiSTiK AG - www.sofistik.de

Composite bridge 38+50+38, b=14.25m, 2x2HL1100R HISTAR460 , slab 0.30m C30/37

Flat Elements

Grp	Number	Node	Node	Node	Node	Mat	t[m]	C[kN/m3]	direction	local x	
81	810389	33281	34060	33533	34063	32	0.300+		1.000	0.000	0.000
81	810390	34060	1911	34061	33533	32	0.300+		1.000	0.000	0.000
81	810391	34061	33285	34062	33533	32	0.300+		1.000	0.000	0.000
81	810392	34062	33532	34063	33533	32	0.300+		1.000	0.000	0.000
81	810393	33289	34064	34067	34066	32	0.300+		1.000	0.000	0.000
81	810394	34064	33256	33864	34067	32	0.300+		1.000	0.000	0.000
81	810395	33864	33255	34065	34067	32	0.300+		1.000	0.000	0.000
81	810396	34065	33288	34066	34067	32	0.300+		1.000	0.000	0.000
81	810397	33288	34065	34070	34069	32	0.300+		1.000	0.000	0.000
81	810398	34065	33255	33872	34070	32	0.300+		1.000	0.000	0.000
81	810399	33872	1212	34068	34070	32	0.300+		1.000	0.000	0.000
81	810400	34068	1912	34069	34070	32	0.300+		1.000	0.000	0.000
81	810401	33257	34071	34074	33922	32	0.300+		1.000	0.000	0.000
81	810402	34071	33290	34072	34074	32	0.300+		1.000	0.000	0.000
81	810403	34072	1913	34073	34074	32	0.300+		1.000	0.000	0.000
81	810404	34073	1213	33922	34074	32	0.300+		1.000	0.000	0.000
81	810405	33290	34071	34076	34075	32	0.300+		1.000	0.000	0.000
81	810406	34071	33257	33818	34076	32	0.300+		1.000	0.000	0.000
81	810407	33818	33256	34064	34076	32	0.300+		1.000	0.000	0.000
81	810408	34064	33289	34075	34076	32	0.300+		1.000	0.000	0.000
81	810409	1212	33778	34079	34068	32	0.300+		1.000	0.000	0.000
81	810410	33778	21212	34077	34079	32	0.300+		1.000	0.000	0.000
81	810411	34077	33287	34078	34079	32	0.300+		1.000	0.000	0.000
81	810412	34078	1912	34068	34079	32	0.300+		1.000	0.000	0.000
81	810413	2210	33911	34083	34082	32	0.300+		1.000	0.000	0.000
81	810414	33911	1214	34080	34083	32	0.300+		1.000	0.000	0.000
81	810415	34080	33535	34081	34083	32	0.300+		1.000	0.000	0.000
81	810416	34081	33346	34082	34083	32	0.300+		1.000	0.000	0.000
81	810417	1913	34084	34086	34073	32	0.300+		1.000	0.000	0.000
81	810418	34084	33291	34085	34086	32	0.300+		1.000	0.000	0.000
81	810419	34085	21213	33918	34086	32	0.300+		1.000	0.000	0.000
81	810420	33918	1213	34073	34086	32	0.300+		1.000	0.000	0.000
81	810421	33292	34087	34090	34089	32	0.300+		1.000	0.000	0.000
81	810422	34087	33293	34088	34090	32	0.300+		1.000	0.000	0.000
81	810423	34088	33466	33813	34090	32	0.300+		1.000	0.000	0.000
81	810424	33813	33465	34089	34090	32	0.300+		1.000	0.000	0.000
81	810425	1210	34091	34093	33763	32	0.300+		1.000	0.000	0.000
81	810426	34091	33281	34063	34093	32	0.300+		1.000	0.000	0.000
81	810427	34063	33532	34092	34093	32	0.300+		1.000	0.000	0.000
81	810428	34092	1211	33763	34093	32	0.300+		1.000	0.000	0.000
81	810429	2910	34094	34097	34096	32	0.300+		1.000	0.000	0.000
81	810430	34094	33346	34081	34097	32	0.300+		1.000	0.000	0.000
81	810431	34081	33535	34095	34097	32	0.300+		1.000	0.000	0.000
81	810432	34095	1914	34096	34097	32	0.300+		1.000	0.000	0.000
81	810433	33291	34098	34099	34085	32	0.300+		1.000	0.000	0.000
81	810434	34098	33292	34089	34099	32	0.300+		1.000	0.000	0.000
81	810435	34089	33465	33880	34099	32	0.300+		1.000	0.000	0.000
81	810436	33880	21213	34085	34099	32	0.300+		1.000	0.000	0.000
81	810437	33534	34100	34103	34102	32	0.300+		1.000	0.000	0.000
81	810438	34100	33532	34062	34103	32	0.300+		1.000	0.000	0.000
81	810439	34062	33285	34101	34103	32	0.300+		1.000	0.000	0.000
81	810440	34101	33286	34102	34103	32	0.300+		1.000	0.000	0.000
81	810441	1214	33806	34105	34080	32	0.300+		1.000	0.000	0.000
81	810442	33806	33466	34088	34105	32	0.300+		1.000	0.000	0.000
81	810443	34088	33293	34104	34105	32	0.300+		1.000	0.000	0.000
81	810444	34104	33535	34080	34105	32	0.300+		1.000	0.000	0.000
81	810445	1211	34092	34107	33856	32	0.300+		1.000	0.000	0.000
81	810446	34092	33532	34100	34107	32	0.300+		1.000	0.000	0.000
81	810447	34100	33534	34106	34107	32	0.300+		1.000	0.000	0.000
81	810448	34106	33254	33856	34107	32	0.300+		1.000	0.000	0.000
81	810449	1910	34108	34110	34109	32	0.300+		1.000	0.000	0.000
81	810450	1911	34060	34110	34108	32	0.300+		1.000	0.000	0.000
81	810451	33281	34109	34110	34060	32	0.300+		1.000	0.000	0.000
81	810452	33286	34111	34113	34102	32	0.300+		1.000	0.000	0.000
81	810453	33287	34112	34113	34111	32	0.300+		1.000	0.000	0.000

SOFiSTiK AG - www.sofistik.de

Composite bridge 38+50+38, b=14.25m, 2x2HL1100R HISTAR460 , slab 0.30m C30/37

Flat Elements

Grp	Number	Node	Node	Node	Node	Mat	t[m]	C[kN/m3]	direction	local x	
81	810454	33534	34102	34113	34112	32	0.300+		1.000	0.000	0.000
81	810455	33534	34112	34115	34114	32	0.300+		1.000	0.000	0.000
81	810456	33287	34077	34115	34112	32	0.300+		1.000	0.000	0.000
81	810457	21212	34114	34115	34077	32	0.300+		1.000	0.000	0.000
81	810458	21212	33924	34116	34114	32	0.300+		1.000	0.000	0.000
81	810459	33254	34106	34116	33924	32	0.300+		1.000	0.000	0.000
81	810460	33534	34114	34116	34106	32	0.300+		1.000	0.000	0.000
81	810461	1914	34095	34119	34118	32	0.300+		1.000	0.000	0.000
81	810462	33535	34117	34119	34095	32	0.300+		1.000	0.000	0.000
81	810463	33294	34118	34119	34117	32	0.300+		1.000	0.000	0.000
81	810464	33294	34117	34121	34120	32	0.300+		1.000	0.000	0.000
81	810465	33535	34104	34121	34117	32	0.300+		1.000	0.000	0.000
81	810466	33293	34120	34121	34104	32	0.300+		1.000	0.000	0.000
82	820001	33564	34122	34126	34125	32	0.300+		1.000	0.000	0.000
82	820002	34122	33566	34123	34126	32	0.300+		1.000	0.000	0.000
82	820003	34123	33228	34124	34126	32	0.300+		1.000	0.000	0.000
82	820004	34124	2116	34125	34126	32	0.300+		1.000	0.000	0.000
82	820005	33564	34127	34130	34122	32	0.300+		1.000	0.000	0.000
82	820006	34127	33320	34128	34130	32	0.300+		1.000	0.000	0.000
82	820007	34128	33321	34129	34130	32	0.300+		1.000	0.000	0.000
82	820008	34129	33566	34122	34130	32	0.300+		1.000	0.000	0.000
82	820009	33555	34131	34135	34134	32	0.300+		1.000	0.000	0.000
82	820010	34131	33303	34132	34135	32	0.300+		1.000	0.000	0.000
82	820011	34132	2111	34133	34135	32	0.300+		1.000	0.000	0.000
82	820012	34133	33556	34134	34135	32	0.300+		1.000	0.000	0.000
82	820013	33555	34136	34139	34131	32	0.300+		1.000	0.000	0.000
82	820014	34136	33550	34137	34139	32	0.300+		1.000	0.000	0.000
82	820015	34137	33304	34138	34139	32	0.300+		1.000	0.000	0.000
82	820016	34138	33303	34131	34139	32	0.300+		1.000	0.000	0.000
82	820017	33542	34140	34144	34143	32	0.300+		1.000	0.000	0.000
82	820018	34140	33537	34141	34144	32	0.300+		1.000	0.000	0.000
82	820019	34141	33549	34142	34144	32	0.300+		1.000	0.000	0.000
82	820020	34142	33536	34143	34144	32	0.300+		1.000	0.000	0.000
82	820021	33542	34145	34148	34140	32	0.300+		1.000	0.000	0.000
82	820022	34145	33547	34146	34148	32	0.300+		1.000	0.000	0.000
82	820023	34146	33538	34147	34148	32	0.300+		1.000	0.000	0.000
82	820024	34147	33537	34140	34148	32	0.300+		1.000	0.000	0.000
82	820025	33563	34149	34153	34152	32	0.300+		1.000	0.000	0.000
82	820026	34149	33562	34150	34153	32	0.300+		1.000	0.000	0.000
82	820027	34150	22212	34151	34153	32	0.300+		1.000	0.000	0.000
82	820028	34151	33557	34152	34153	32	0.300+		1.000	0.000	0.000
82	820029	33563	34154	34157	34149	32	0.300+		1.000	0.000	0.000
82	820030	34154	33559	34155	34157	32	0.300+		1.000	0.000	0.000
82	820031	34155	33558	34156	34157	32	0.300+		1.000	0.000	0.000
82	820032	34156	33562	34149	34157	32	0.300+		1.000	0.000	0.000
82	820033	33547	34145	34161	34160	32	0.300+		1.000	0.000	0.000
82	820034	34145	33542	34158	34161	32	0.300+		1.000	0.000	0.000
82	820035	34158	33364	34159	34161	32	0.300+		1.000	0.000	0.000
82	820036	34159	33363	34160	34161	32	0.300+		1.000	0.000	0.000
82	820037	2212	34162	34165	34164	32	0.300+		1.000	0.000	0.000
82	820038	34162	33565	34163	34165	32	0.300+		1.000	0.000	0.000
82	820039	34163	33557	34151	34165	32	0.300+		1.000	0.000	0.000
82	820040	34151	22212	34164	34165	32	0.300+		1.000	0.000	0.000
82	820041	33304	34137	34169	34168	32	0.300+		1.000	0.000	0.000
82	820042	34137	33550	34166	34169	32	0.300+		1.000	0.000	0.000
82	820043	34166	33561	34167	34169	32	0.300+		1.000	0.000	0.000
82	820044	34167	33305	34168	34169	32	0.300+		1.000	0.000	0.000
82	820045	2210	34170	34173	33910	32	0.300+		1.000	0.000	0.000
82	820046	34170	2211	34171	34173	32	0.300+		1.000	0.000	0.000
82	820047	34171	33554	34172	34173	32	0.300+		1.000	0.000	0.000
82	820048	34172	33299	33910	34173	32	0.300+		1.000	0.000	0.000
82	820049	33322	34174	34177	34176	32	0.300+		1.000	0.000	0.000
82	820050	34174	33567	34175	34177	32	0.300+		1.000	0.000	0.000
82	820051	34175	33566	34129	34177	32	0.300+		1.000	0.000	0.000
82	820052	34129	33321	34176	34177	32	0.300+		1.000	0.000	0.000

SOFiSTiK AG - www.sofistik.de

Composite bridge 38+50+38, b=14.25m, 2x2HL1100R HISTAR460 , slab 0.30m C30/37

Flat Elements

Grp	Number	Node	Node	Node	Node	Mat	t[m]	C[kN/m3]	direction	local x	
82	820053	33565	34178	34182	34181	32	0.300+		1.000	0.000	0.000
82	820054	34178	33318	34179	34182	32	0.300+		1.000	0.000	0.000
82	820055	34179	33564	34180	34182	32	0.300+		1.000	0.000	0.000
82	820056	34180	33226	34181	34182	32	0.300+		1.000	0.000	0.000
82	820057	33228	34123	34185	34184	32	0.300+		1.000	0.000	0.000
82	820058	34123	33566	34175	34185	32	0.300+		1.000	0.000	0.000
82	820059	34175	33567	34183	34185	32	0.300+		1.000	0.000	0.000
82	820060	34183	33229	34184	34185	32	0.300+		1.000	0.000	0.000
82	820061	33297	34186	34189	33905	32	0.300+		1.000	0.000	0.000
82	820062	34186	33552	34187	34189	32	0.300+		1.000	0.000	0.000
82	820063	34187	33551	34188	34189	32	0.300+		1.000	0.000	0.000
82	820064	34188	33296	33905	34189	32	0.300+		1.000	0.000	0.000
82	820065	33307	34190	34194	34193	32	0.300+		1.000	0.000	0.000
82	820066	34190	33306	34191	34194	32	0.300+		1.000	0.000	0.000
82	820067	34191	33560	34192	34194	32	0.300+		1.000	0.000	0.000
82	820068	34192	33563	34193	34194	32	0.300+		1.000	0.000	0.000
82	820069	33555	34134	34197	34196	32	0.300+		1.000	0.000	0.000
82	820070	34134	33556	34195	34197	32	0.300+		1.000	0.000	0.000
82	820071	34195	2110	33758	34197	32	0.300+		1.000	0.000	0.000
82	820072	33758	33295	34196	34197	32	0.300+		1.000	0.000	0.000
82	820073	33299	34172	34200	33908	32	0.300+		1.000	0.000	0.000
82	820074	34172	33554	34198	34200	32	0.300+		1.000	0.000	0.000
82	820075	34198	33553	34199	34200	32	0.300+		1.000	0.000	0.000
82	820076	34199	33298	33908	34200	32	0.300+		1.000	0.000	0.000
82	820077	33298	34199	34202	33913	32	0.300+		1.000	0.000	0.000
82	820078	34199	33553	34201	34202	32	0.300+		1.000	0.000	0.000
82	820079	34201	33552	34186	34202	32	0.300+		1.000	0.000	0.000
82	820080	34186	33297	33913	34202	32	0.300+		1.000	0.000	0.000
82	820081	3210	34203	34206	34205	32	0.300+		1.000	0.000	0.000
82	820082	34203	33364	34158	34206	32	0.300+		1.000	0.000	0.000
82	820083	34158	33542	34204	34206	32	0.300+		1.000	0.000	0.000
82	820084	34204	2214	34205	34206	32	0.300+		1.000	0.000	0.000
82	820085	33468	34207	34210	34209	32	0.300+		1.000	0.000	0.000
82	820086	34207	33467	34208	34210	32	0.300+		1.000	0.000	0.000
82	820087	34208	33549	34141	34210	32	0.300+		1.000	0.000	0.000
82	820088	34141	33537	34209	34210	32	0.300+		1.000	0.000	0.000
82	820089	33230	34211	34215	34214	32	0.300+		1.000	0.000	0.000
82	820090	34211	2117	34212	34215	32	0.300+		1.000	0.000	0.000
82	820091	34212	33541	34213	34215	32	0.300+		1.000	0.000	0.000
82	820092	34213	33544	34214	34215	32	0.300+		1.000	0.000	0.000
82	820093	33549	34216	34220	34219	32	0.300+		1.000	0.000	0.000
82	820094	34216	22113	34217	34220	32	0.300+		1.000	0.000	0.000
82	820095	34217	2113	34218	34220	32	0.300+		1.000	0.000	0.000
82	820096	34218	33548	34219	34220	32	0.300+		1.000	0.000	0.000
82	820097	33229	34183	34223	34222	32	0.300+		1.000	0.000	0.000
82	820098	34183	33567	34221	34223	32	0.300+		1.000	0.000	0.000
82	820099	34221	33548	34218	34223	32	0.300+		1.000	0.000	0.000
82	820100	34218	2113	34222	34223	32	0.300+		1.000	0.000	0.000
82	820101	22112	34224	34227	34226	32	0.300+		1.000	0.000	0.000
82	820102	34224	33557	34163	34227	32	0.300+		1.000	0.000	0.000
82	820103	34163	33565	34225	34227	32	0.300+		1.000	0.000	0.000
82	820104	34225	2112	34226	34227	32	0.300+		1.000	0.000	0.000
82	820105	33473	34228	34231	34230	32	0.300+		1.000	0.000	0.000
82	820106	34228	33542	34143	34231	32	0.300+		1.000	0.000	0.000
82	820107	34143	33536	34229	34231	32	0.300+		1.000	0.000	0.000
82	820108	34229	33472	34230	34231	32	0.300+		1.000	0.000	0.000
82	820109	33543	34232	34236	34235	32	0.300+		1.000	0.000	0.000
82	820110	34232	33540	34233	34236	32	0.300+		1.000	0.000	0.000
82	820111	34233	33539	34234	34236	32	0.300+		1.000	0.000	0.000
82	820112	34234	33546	34235	34236	32	0.300+		1.000	0.000	0.000
82	820113	33307	34193	34238	34237	32	0.300+		1.000	0.000	0.000
82	820114	34193	33563	34152	34238	32	0.300+		1.000	0.000	0.000
82	820115	34152	33557	34224	34238	32	0.300+		1.000	0.000	0.000
82	820116	34224	22112	34237	34238	32	0.300+		1.000	0.000	0.000
82	820117	2211	34239	34242	34171	32	0.300+		1.000	0.000	0.000

SOFiSTiK AG - www.sofistik.de

Composite bridge 38+50+38, b=14.25m, 2x2HL1100R HISTAR460 , slab 0.30m C30/37

Flat Elements

Grp	Number	Node	Node	Node	Node	Mat	t[m]	C[kN/m3]	direction	local x	
82	820118	34239	33317	34240	34242	32	0.300+		1.000	0.000	0.000
82	820119	34240	33558	34241	34242	32	0.300+		1.000	0.000	0.000
82	820120	34241	33554	34171	34242	32	0.300+		1.000	0.000	0.000
82	820121	33470	34243	34247	34246	32	0.300+		1.000	0.000	0.000
82	820122	34243	33469	34244	34247	32	0.300+		1.000	0.000	0.000
82	820123	34244	33538	34245	34247	32	0.300+		1.000	0.000	0.000
82	820124	34245	33539	34246	34247	32	0.300+		1.000	0.000	0.000
82	820125	33469	34248	34249	34244	32	0.300+		1.000	0.000	0.000
82	820126	34248	33468	34209	34249	32	0.300+		1.000	0.000	0.000
82	820127	34209	33537	34147	34249	32	0.300+		1.000	0.000	0.000
82	820128	34147	33538	34244	34249	32	0.300+		1.000	0.000	0.000
82	820129	33322	34250	34252	34174	32	0.300+		1.000	0.000	0.000
82	820130	34250	2213	34251	34252	32	0.300+		1.000	0.000	0.000
82	820131	34251	33548	34221	34252	32	0.300+		1.000	0.000	0.000
82	820132	34221	33567	34174	34252	32	0.300+		1.000	0.000	0.000
82	820133	33230	34214	34256	34255	32	0.300+		1.000	0.000	0.000
82	820134	34214	33544	34253	34256	32	0.300+		1.000	0.000	0.000
82	820135	34253	33361	34254	34256	32	0.300+		1.000	0.000	0.000
82	820136	34254	3110	34255	34256	32	0.300+		1.000	0.000	0.000
82	820137	2114	34257	34261	34260	32	0.300+		1.000	0.000	0.000
82	820138	34257	33471	34258	34261	32	0.300+		1.000	0.000	0.000
82	820139	34258	33540	34259	34261	32	0.300+		1.000	0.000	0.000
82	820140	34259	33541	34260	34261	32	0.300+		1.000	0.000	0.000
82	820141	33471	34262	34263	34258	32	0.300+		1.000	0.000	0.000
82	820142	34262	33470	34246	34263	32	0.300+		1.000	0.000	0.000
82	820143	34246	33539	34233	34263	32	0.300+		1.000	0.000	0.000
82	820144	34233	33540	34258	34263	32	0.300+		1.000	0.000	0.000
82	820145	33539	34245	34266	34265	32	0.300+		1.000	0.000	0.000
82	820146	34245	33538	34146	34266	32	0.300+		1.000	0.000	0.000
82	820147	34146	33547	34264	34266	32	0.300+		1.000	0.000	0.000
82	820148	34264	33545	34265	34266	32	0.300+		1.000	0.000	0.000
82	820149	22213	34267	34269	34268	32	0.300+		1.000	0.000	0.000
82	820150	34267	33536	34142	34269	32	0.300+		1.000	0.000	0.000
82	820151	34142	33549	34219	34269	32	0.300+		1.000	0.000	0.000
82	820152	34219	33548	34268	34269	32	0.300+		1.000	0.000	0.000
82	820153	33295	33900	34271	34196	32	0.300+		1.000	0.000	0.000
82	820154	33900	33296	34188	34271	32	0.300+		1.000	0.000	0.000
82	820155	34188	33551	34270	34271	32	0.300+		1.000	0.000	0.000
82	820156	34270	33555	34196	34271	32	0.300+		1.000	0.000	0.000
82	820157	33543	34235	34275	34274	32	0.300+		1.000	0.000	0.000
82	820158	34235	33546	34272	34275	32	0.300+		1.000	0.000	0.000
82	820159	34272	33362	34273	34275	32	0.300+		1.000	0.000	0.000
82	820160	34273	33361	34274	34275	32	0.300+		1.000	0.000	0.000
82	820161	33561	34276	34279	34278	32	0.300+		1.000	0.000	0.000
82	820162	34276	33551	34187	34279	32	0.300+		1.000	0.000	0.000
82	820163	34187	33552	34277	34279	32	0.300+		1.000	0.000	0.000
82	820164	34277	33560	34278	34279	32	0.300+		1.000	0.000	0.000
82	820165	33560	34277	34282	34281	32	0.300+		1.000	0.000	0.000
82	820166	34277	33552	34201	34282	32	0.300+		1.000	0.000	0.000
82	820167	34201	33553	34280	34282	32	0.300+		1.000	0.000	0.000
82	820168	34280	33559	34281	34282	32	0.300+		1.000	0.000	0.000
82	820169	33558	34240	34284	34156	32	0.300+		1.000	0.000	0.000
82	820170	34240	33317	34283	34284	32	0.300+		1.000	0.000	0.000
82	820171	34283	22212	34150	34284	32	0.300+		1.000	0.000	0.000
82	820172	34150	33562	34156	34284	32	0.300+		1.000	0.000	0.000
82	820173	33362	34285	34287	34286	32	0.300+		1.000	0.000	0.000
82	820174	34285	33545	34264	34287	32	0.300+		1.000	0.000	0.000
82	820175	34264	33547	34160	34287	32	0.300+		1.000	0.000	0.000
82	820176	34160	33363	34286	34287	32	0.300+		1.000	0.000	0.000
82	820177	33559	34280	34288	34155	32	0.300+		1.000	0.000	0.000
82	820178	34280	33553	34198	34288	32	0.300+		1.000	0.000	0.000
82	820179	34198	33554	34241	34288	32	0.300+		1.000	0.000	0.000
82	820180	34241	33558	34155	34288	32	0.300+		1.000	0.000	0.000
82	820181	33540	34232	34290	34259	32	0.300+		1.000	0.000	0.000
82	820182	34232	33543	34289	34290	32	0.300+		1.000	0.000	0.000

SOFiSTiK AG - www.sofistik.de

Composite bridge 38+50+38, b=14.25m, 2x2HL1100R HISTAR460 , slab 0.30m C30/37

Flat Elements

Grp	Number	Node	Node	Node	Node	Mat	t[m]	C[kN/m3]	direction	local x	
82	820183	34289	33544	34213	34290	32	0.300+		1.000	0.000	0.000
82	820184	34213	33541	34259	34290	32	0.300+		1.000	0.000	0.000
82	820185	33305	34167	34292	34291	32	0.300+		1.000	0.000	0.000
82	820186	34167	33561	34278	34292	32	0.300+		1.000	0.000	0.000
82	820187	34278	33560	34191	34292	32	0.300+		1.000	0.000	0.000
82	820188	34191	33306	34291	34292	32	0.300+		1.000	0.000	0.000
82	820189	33539	34265	34293	34234	32	0.300+		1.000	0.000	0.000
82	820190	34265	33545	34285	34293	32	0.300+		1.000	0.000	0.000
82	820191	34285	33362	34272	34293	32	0.300+		1.000	0.000	0.000
82	820192	34272	33546	34234	34293	32	0.300+		1.000	0.000	0.000
82	820193	33555	34270	34294	34136	32	0.300+		1.000	0.000	0.000
82	820194	34270	33551	34276	34294	32	0.300+		1.000	0.000	0.000
82	820195	34276	33561	34166	34294	32	0.300+		1.000	0.000	0.000
82	820196	34166	33550	34136	34294	32	0.300+		1.000	0.000	0.000
82	820197	22213	34295	34296	34267	32	0.300+		1.000	0.000	0.000
82	820198	33472	34229	34296	34295	32	0.300+		1.000	0.000	0.000
82	820199	33536	34267	34296	34229	32	0.300+		1.000	0.000	0.000
82	820200	2214	34204	34298	34297	32	0.300+		1.000	0.000	0.000
82	820201	33542	34228	34298	34204	32	0.300+		1.000	0.000	0.000
82	820202	33473	34297	34298	34228	32	0.300+		1.000	0.000	0.000
82	820203	33543	34274	34299	34289	32	0.300+		1.000	0.000	0.000
82	820204	33361	34253	34299	34274	32	0.300+		1.000	0.000	0.000
82	820205	33544	34289	34299	34253	32	0.300+		1.000	0.000	0.000
82	820206	2213	34300	34301	34251	32	0.300+		1.000	0.000	0.000
82	820207	22213	34268	34301	34300	32	0.300+		1.000	0.000	0.000
82	820208	33548	34251	34301	34268	32	0.300+		1.000	0.000	0.000
82	820209	22113	34216	34303	34302	32	0.300+		1.000	0.000	0.000
82	820210	33549	34208	34303	34216	32	0.300+		1.000	0.000	0.000
82	820211	33467	34302	34303	34208	32	0.300+		1.000	0.000	0.000
82	820212	2117	34304	34305	34212	32	0.300+		1.000	0.000	0.000
82	820213	2114	34260	34305	34304	32	0.300+		1.000	0.000	0.000
82	820214	33541	34212	34305	34260	32	0.300+		1.000	0.000	0.000
82	820215	2115	34306	34308	34307	32	0.300+		1.000	0.000	0.000
82	820216	2110	34195	34308	34306	32	0.300+		1.000	0.000	0.000
82	820217	33556	34307	34308	34195	32	0.300+		1.000	0.000	0.000
82	820218	2115	34307	34310	34309	32	0.300+		1.000	0.000	0.000
82	820219	33556	34133	34310	34307	32	0.300+		1.000	0.000	0.000
82	820220	2111	34309	34310	34133	32	0.300+		1.000	0.000	0.000
82	820221	33560	34281	34311	34192	32	0.300+		1.000	0.000	0.000
82	820222	33559	34154	34311	34281	32	0.300+		1.000	0.000	0.000
82	820223	33563	34192	34311	34154	32	0.300+		1.000	0.000	0.000
82	820224	2116	34312	34314	34125	32	0.300+		1.000	0.000	0.000
82	820225	33227	34313	34314	34312	32	0.300+		1.000	0.000	0.000
82	820226	33564	34125	34314	34313	32	0.300+		1.000	0.000	0.000
82	820227	2212	34315	34316	34162	32	0.300+		1.000	0.000	0.000
82	820228	33318	34178	34316	34315	32	0.300+		1.000	0.000	0.000
82	820229	33565	34162	34316	34178	32	0.300+		1.000	0.000	0.000
82	820230	2112	34225	34318	34317	32	0.300+		1.000	0.000	0.000
82	820231	33565	34181	34318	34225	32	0.300+		1.000	0.000	0.000
82	820232	33226	34317	34318	34181	32	0.300+		1.000	0.000	0.000
82	820233	33319	34319	34321	34320	32	0.300+		1.000	0.000	0.000
82	820234	33564	34179	34321	34319	32	0.300+		1.000	0.000	0.000
82	820235	33318	34320	34321	34179	32	0.300+		1.000	0.000	0.000
82	820236	33227	34322	34323	34313	32	0.300+		1.000	0.000	0.000
82	820237	33226	34180	34323	34322	32	0.300+		1.000	0.000	0.000
82	820238	33564	34313	34323	34180	32	0.300+		1.000	0.000	0.000
82	820239	33319	34324	34325	34319	32	0.300+		1.000	0.000	0.000
82	820240	33320	34127	34325	34324	32	0.300+		1.000	0.000	0.000
82	820241	33564	34319	34325	34127	32	0.300+		1.000	0.000	0.000
82	820242	33569	34326	33572	34329	32	0.300+		1.000	0.000	0.000
82	820243	34326	33568	34327	33572	32	0.300+		1.000	0.000	0.000
82	820244	34327	33573	34328	33572	32	0.300+		1.000	0.000	0.000
82	820245	34328	33395	34329	33572	32	0.300+		1.000	0.000	0.000
82	820246	33586	34330	34334	34333	32	0.300+		1.000	0.000	0.000
82	820247	34330	33580	34331	34334	32	0.300+		1.000	0.000	0.000

SOFiSTiK AG - www.sofistik.de

Composite bridge 38+50+38, b=14.25m, 2x2HL1100R HISTAR460 , slab 0.30m C30/37

Flat Elements

Grp	Number	Node	Node	Node	Node	Mat	t[m]	C[kN/m3]	direction	local x	
82	820248	34331	33576	34332	34334	32	0.300+		1.000	0.000	0.000
82	820249	34332	33581	34333	34334	32	0.300+		1.000	0.000	0.000
82	820250	33586	34333	34338	34337	32	0.300+		1.000	0.000	0.000
82	820251	34333	33581	34335	34338	32	0.300+		1.000	0.000	0.000
82	820252	34335	33582	34336	34338	32	0.300+		1.000	0.000	0.000
82	820253	34336	33585	34337	34338	32	0.300+		1.000	0.000	0.000
82	820254	2813	34339	34342	34341	32	0.300+		1.000	0.000	0.000
82	820255	34339	33341	34340	34342	32	0.300+		1.000	0.000	0.000
82	820256	34340	33229	34222	34342	32	0.300+		1.000	0.000	0.000
82	820257	34222	2113	34341	34342	32	0.300+		1.000	0.000	0.000
82	820258	33228	34184	34345	34344	32	0.300+		1.000	0.000	0.000
82	820259	34184	33229	34340	34345	32	0.300+		1.000	0.000	0.000
82	820260	34340	33341	34343	34345	32	0.300+		1.000	0.000	0.000
82	820261	34343	33340	34344	34345	32	0.300+		1.000	0.000	0.000
82	820262	33227	34346	34349	34322	32	0.300+		1.000	0.000	0.000
82	820263	34346	33338	34347	34349	32	0.300+		1.000	0.000	0.000
82	820264	34347	33337	34348	34349	32	0.300+		1.000	0.000	0.000
82	820265	34348	33226	34322	34349	32	0.300+		1.000	0.000	0.000
82	820266	33338	34346	34352	34351	32	0.300+		1.000	0.000	0.000
82	820267	34346	33227	34312	34352	32	0.300+		1.000	0.000	0.000
82	820268	34312	2116	34350	34352	32	0.300+		1.000	0.000	0.000
82	820269	34350	33339	34351	34352	32	0.300+		1.000	0.000	0.000
82	820270	33226	34348	34355	34317	32	0.300+		1.000	0.000	0.000
82	820271	34348	33337	34353	34355	32	0.300+		1.000	0.000	0.000
82	820272	34353	2812	34354	34355	32	0.300+		1.000	0.000	0.000
82	820273	34354	2112	34317	34355	32	0.300+		1.000	0.000	0.000
82	820274	33228	34344	34357	34124	32	0.300+		1.000	0.000	0.000
82	820275	34344	33340	34356	34357	32	0.300+		1.000	0.000	0.000
82	820276	34356	33339	34350	34357	32	0.300+		1.000	0.000	0.000
82	820277	34350	2116	34124	34357	32	0.300+		1.000	0.000	0.000
82	820278	2812	34358	34360	34354	32	0.300+		1.000	0.000	0.000
82	820279	34358	33336	34359	34360	32	0.300+		1.000	0.000	0.000
82	820280	34359	22112	34226	34360	32	0.300+		1.000	0.000	0.000
82	820281	34226	2112	34354	34360	32	0.300+		1.000	0.000	0.000
82	820282	33467	34207	34364	34363	32	0.300+		1.000	0.000	0.000
82	820283	34207	33468	34361	34364	32	0.300+		1.000	0.000	0.000
82	820284	34361	33344	34362	34364	32	0.300+		1.000	0.000	0.000
82	820285	34362	33343	34363	34364	32	0.300+		1.000	0.000	0.000
82	820286	2813	34341	34367	34366	32	0.300+		1.000	0.000	0.000
82	820287	34341	2113	34217	34367	32	0.300+		1.000	0.000	0.000
82	820288	34217	22113	34365	34367	32	0.300+		1.000	0.000	0.000
82	820289	34365	33342	34366	34367	32	0.300+		1.000	0.000	0.000
82	820290	33467	34363	34369	34302	32	0.300+		1.000	0.000	0.000
82	820291	34363	33343	34368	34369	32	0.300+		1.000	0.000	0.000
82	820292	34368	33342	34365	34369	32	0.300+		1.000	0.000	0.000
82	820293	34365	22113	34302	34369	32	0.300+		1.000	0.000	0.000
82	820294	33587	34370	34373	34372	32	0.300+		1.000	0.000	0.000
82	820295	34370	33306	34190	34373	32	0.300+		1.000	0.000	0.000
82	820296	34190	33307	34371	34373	32	0.300+		1.000	0.000	0.000
82	820297	34371	33588	34372	34373	32	0.300+		1.000	0.000	0.000
82	820298	2110	34374	34377	34019	32	0.300+		1.000	0.000	0.000
82	820299	34374	33579	34375	34377	32	0.300+		1.000	0.000	0.000
82	820300	34375	33578	34376	34377	32	0.300+		1.000	0.000	0.000
82	820301	34376	33332	34019	34377	32	0.300+		1.000	0.000	0.000
82	820302	33331	34378	34381	34380	32	0.300+		1.000	0.000	0.000
82	820303	34378	33577	34379	34381	32	0.300+		1.000	0.000	0.000
82	820304	34379	33581	34332	34381	32	0.300+		1.000	0.000	0.000
82	820305	34332	33576	34380	34381	32	0.300+		1.000	0.000	0.000
82	820306	33306	34370	34384	34291	32	0.300+		1.000	0.000	0.000
82	820307	34370	33587	34382	34384	32	0.300+		1.000	0.000	0.000
82	820308	34382	33589	34383	34384	32	0.300+		1.000	0.000	0.000
82	820309	34383	33305	34291	34384	32	0.300+		1.000	0.000	0.000
82	820310	2814	34385	34389	34388	32	0.300+		1.000	0.000	0.000
82	820311	34385	33571	34386	34389	32	0.300+		1.000	0.000	0.000
82	820312	34386	33394	34387	34389	32	0.300+		1.000	0.000	0.000

SOFiSTiK AG - www.sofistik.de

Composite bridge 38+50+38, b=14.25m, 2x2HL1100R HISTAR460 , slab 0.30m C30/37

Flat Elements

Grp	Number	Node	Node	Node	Node	Mat	t[m]	C[kN/m3]	direction	local x	
82	820313	34387	3810	34388	34389	32	0.300+		1.000	0.000	0.000
82	820314	33578	34390	34392	34391	32	0.300+		1.000	0.000	0.000
82	820315	34390	33582	34335	34392	32	0.300+		1.000	0.000	0.000
82	820316	34335	33581	34379	34392	32	0.300+		1.000	0.000	0.000
82	820317	34379	33577	34391	34392	32	0.300+		1.000	0.000	0.000
82	820318	33580	34393	34396	34331	32	0.300+		1.000	0.000	0.000
82	820319	34393	33333	34394	34396	32	0.300+		1.000	0.000	0.000
82	820320	34394	2811	34395	34396	32	0.300+		1.000	0.000	0.000
82	820321	34395	33576	34331	34396	32	0.300+		1.000	0.000	0.000
82	820322	33230	34397	34399	34211	32	0.300+		1.000	0.000	0.000
82	820323	34397	33573	34327	34399	32	0.300+		1.000	0.000	0.000
82	820324	34327	33568	34398	34399	32	0.300+		1.000	0.000	0.000
82	820325	34398	2117	34211	34399	32	0.300+		1.000	0.000	0.000
82	820326	2811	34400	34401	34395	32	0.300+		1.000	0.000	0.000
82	820327	34400	2810	33962	34401	32	0.300+		1.000	0.000	0.000
82	820328	33962	33331	34380	34401	32	0.300+		1.000	0.000	0.000
82	820329	34380	33576	34395	34401	32	0.300+		1.000	0.000	0.000
82	820330	33303	34138	34405	34404	32	0.300+		1.000	0.000	0.000
82	820331	34138	33304	34402	34405	32	0.300+		1.000	0.000	0.000
82	820332	34402	33584	34403	34405	32	0.300+		1.000	0.000	0.000
82	820333	34403	33583	34404	34405	32	0.300+		1.000	0.000	0.000
82	820334	33335	34406	34410	34409	32	0.300+		1.000	0.000	0.000
82	820335	34406	33334	34407	34410	32	0.300+		1.000	0.000	0.000
82	820336	34407	33586	34408	34410	32	0.300+		1.000	0.000	0.000
82	820337	34408	33587	34409	34410	32	0.300+		1.000	0.000	0.000
82	820338	33469	34243	34414	34413	32	0.300+		1.000	0.000	0.000
82	820339	34243	33470	34411	34414	32	0.300+		1.000	0.000	0.000
82	820340	34411	33575	34412	34414	32	0.300+		1.000	0.000	0.000
82	820341	34412	33574	34413	34414	32	0.300+		1.000	0.000	0.000
82	820342	33307	34237	34416	34371	32	0.300+		1.000	0.000	0.000
82	820343	34237	22112	34359	34416	32	0.300+		1.000	0.000	0.000
82	820344	34359	33336	34415	34416	32	0.300+		1.000	0.000	0.000
82	820345	34415	33588	34371	34416	32	0.300+		1.000	0.000	0.000
82	820346	33333	34393	34418	34417	32	0.300+		1.000	0.000	0.000
82	820347	34393	33580	34330	34418	32	0.300+		1.000	0.000	0.000
82	820348	34330	33586	34407	34418	32	0.300+		1.000	0.000	0.000
82	820349	34407	33334	34417	34418	32	0.300+		1.000	0.000	0.000
82	820350	2114	34419	34422	34257	32	0.300+		1.000	0.000	0.000
82	820351	34419	33568	34420	34422	32	0.300+		1.000	0.000	0.000
82	820352	34420	33575	34421	34422	32	0.300+		1.000	0.000	0.000
82	820353	34421	33471	34257	34422	32	0.300+		1.000	0.000	0.000
82	820354	2111	34132	34425	34424	32	0.300+		1.000	0.000	0.000
82	820355	34132	33303	34404	34425	32	0.300+		1.000	0.000	0.000
82	820356	34404	33583	34423	34425	32	0.300+		1.000	0.000	0.000
82	820357	34423	33579	34424	34425	32	0.300+		1.000	0.000	0.000
82	820358	33230	34255	34427	34397	32	0.300+		1.000	0.000	0.000
82	820359	34255	3110	34426	34427	32	0.300+		1.000	0.000	0.000
82	820360	34426	33395	34328	34427	32	0.300+		1.000	0.000	0.000
82	820361	34328	33573	34397	34427	32	0.300+		1.000	0.000	0.000
82	820362	33344	34428	34432	34431	32	0.300+		1.000	0.000	0.000
82	820363	34428	33574	34429	34432	32	0.300+		1.000	0.000	0.000
82	820364	34429	33571	34430	34432	32	0.300+		1.000	0.000	0.000
82	820365	34430	33345	34431	34432	32	0.300+		1.000	0.000	0.000
82	820366	33304	34168	34434	34402	32	0.300+		1.000	0.000	0.000
82	820367	34168	33305	34383	34434	32	0.300+		1.000	0.000	0.000
82	820368	34383	33589	34433	34434	32	0.300+		1.000	0.000	0.000
82	820369	34433	33584	34402	34434	32	0.300+		1.000	0.000	0.000
82	820370	33585	34435	34436	34337	32	0.300+		1.000	0.000	0.000
82	820371	34435	33589	34382	34436	32	0.300+		1.000	0.000	0.000
82	820372	34382	33587	34408	34436	32	0.300+		1.000	0.000	0.000
82	820373	34408	33586	34337	34436	32	0.300+		1.000	0.000	0.000
82	820374	33575	34437	34439	34412	32	0.300+		1.000	0.000	0.000
82	820375	34437	33570	34438	34439	32	0.300+		1.000	0.000	0.000
82	820376	34438	33571	34429	34439	32	0.300+		1.000	0.000	0.000
82	820377	34429	33574	34412	34439	32	0.300+		1.000	0.000	0.000

SOFiSTiK AG - www.sofistik.de

Composite bridge 38+50+38, b=14.25m, 2x2HL1100R HISTAR460 , slab 0.30m C30/37

Flat Elements

Grp	Number	Node	Node	Node	Node	Mat	t[m]	C[kN/m3]	direction	local x	
82	820378	33585	34336	34442	34441	32	0.300+		1.000	0.000	0.000
82	820379	34336	33582	34440	34442	32	0.300+		1.000	0.000	0.000
82	820380	34440	33583	34403	34442	32	0.300+		1.000	0.000	0.000
82	820381	34403	33584	34441	34442	32	0.300+		1.000	0.000	0.000
82	820382	33579	34423	34443	34375	32	0.300+		1.000	0.000	0.000
82	820383	34423	33583	34440	34443	32	0.300+		1.000	0.000	0.000
82	820384	34440	33582	34390	34443	32	0.300+		1.000	0.000	0.000
82	820385	34390	33578	34375	34443	32	0.300+		1.000	0.000	0.000
82	820386	33469	34413	34444	34248	32	0.300+		1.000	0.000	0.000
82	820387	34413	33574	34428	34444	32	0.300+		1.000	0.000	0.000
82	820388	34428	33344	34361	34444	32	0.300+		1.000	0.000	0.000
82	820389	34361	33468	34248	34444	32	0.300+		1.000	0.000	0.000
82	820390	33394	34445	34448	34447	32	0.300+		1.000	0.000	0.000
82	820391	34445	33570	34446	34448	32	0.300+		1.000	0.000	0.000
82	820392	34446	33569	34329	34448	32	0.300+		1.000	0.000	0.000
82	820393	34329	33395	34447	34448	32	0.300+		1.000	0.000	0.000
82	820394	33331	34049	34449	34378	32	0.300+		1.000	0.000	0.000
82	820395	34049	33332	34376	34449	32	0.300+		1.000	0.000	0.000
82	820396	34376	33578	34391	34449	32	0.300+		1.000	0.000	0.000
82	820397	34391	33577	34378	34449	32	0.300+		1.000	0.000	0.000
82	820398	33336	34450	34451	34415	32	0.300+		1.000	0.000	0.000
82	820399	34450	33335	34409	34451	32	0.300+		1.000	0.000	0.000
82	820400	34409	33587	34372	34451	32	0.300+		1.000	0.000	0.000
82	820401	34372	33588	34415	34451	32	0.300+		1.000	0.000	0.000
82	820402	33571	34438	34452	34386	32	0.300+		1.000	0.000	0.000
82	820403	33570	34445	34452	34438	32	0.300+		1.000	0.000	0.000
82	820404	33394	34386	34452	34445	32	0.300+		1.000	0.000	0.000
82	820405	2114	34304	34453	34419	32	0.300+		1.000	0.000	0.000
82	820406	2117	34398	34453	34304	32	0.300+		1.000	0.000	0.000
82	820407	33568	34419	34453	34398	32	0.300+		1.000	0.000	0.000
82	820408	33470	34262	34454	34411	32	0.300+		1.000	0.000	0.000
82	820409	33471	34421	34454	34262	32	0.300+		1.000	0.000	0.000
82	820410	33575	34411	34454	34421	32	0.300+		1.000	0.000	0.000
82	820411	33568	34326	34456	34420	32	0.300+		1.000	0.000	0.000
82	820412	33569	34455	34456	34326	32	0.300+		1.000	0.000	0.000
82	820413	33575	34420	34456	34455	32	0.300+		1.000	0.000	0.000
82	820414	33569	34446	34457	34455	32	0.300+		1.000	0.000	0.000
82	820415	33570	34437	34457	34446	32	0.300+		1.000	0.000	0.000
82	820416	33575	34455	34457	34437	32	0.300+		1.000	0.000	0.000
82	820417	2814	34458	34459	34385	32	0.300+		1.000	0.000	0.000
82	820418	33345	34430	34459	34458	32	0.300+		1.000	0.000	0.000
82	820419	33571	34385	34459	34430	32	0.300+		1.000	0.000	0.000
82	820420	2111	34424	34461	34309	32	0.300+		1.000	0.000	0.000
82	820421	33579	34460	34461	34424	32	0.300+		1.000	0.000	0.000
82	820422	2115	34309	34461	34460	32	0.300+		1.000	0.000	0.000
82	820423	2115	34460	34462	34306	32	0.300+		1.000	0.000	0.000
82	820424	33579	34374	34462	34460	32	0.300+		1.000	0.000	0.000
82	820425	2110	34306	34462	34374	32	0.300+		1.000	0.000	0.000
82	820426	33585	34441	34463	34435	32	0.300+		1.000	0.000	0.000
82	820427	33584	34433	34463	34441	32	0.300+		1.000	0.000	0.000
82	820428	33589	34435	34463	34433	32	0.300+		1.000	0.000	0.000
82	820429	33354	34464	34467	34466	32	0.300+		1.000	0.000	0.000
82	820430	34464	33320	34324	34467	32	0.300+		1.000	0.000	0.000
82	820431	34324	33319	34465	34467	32	0.300+		1.000	0.000	0.000
82	820432	34465	33353	34466	34467	32	0.300+		1.000	0.000	0.000
82	820433	33355	34468	34470	34469	32	0.300+		1.000	0.000	0.000
82	820434	34468	33321	34128	34470	32	0.300+		1.000	0.000	0.000
82	820435	34128	33320	34464	34470	32	0.300+		1.000	0.000	0.000
82	820436	34464	33354	34469	34470	32	0.300+		1.000	0.000	0.000
82	820437	33353	34465	34473	34472	32	0.300+		1.000	0.000	0.000
82	820438	34465	33319	34320	34473	32	0.300+		1.000	0.000	0.000
82	820439	34320	33318	34471	34473	32	0.300+		1.000	0.000	0.000
82	820440	34471	33352	34472	34473	32	0.300+		1.000	0.000	0.000
82	820441	33352	34471	34476	34475	32	0.300+		1.000	0.000	0.000
82	820442	34471	33318	34315	34476	32	0.300+		1.000	0.000	0.000

SOFiSTiK AG - www.sofistik.de

Composite bridge 38+50+38, b=14.25m, 2x2HL1100R HISTAR460 , slab 0.30m C30/37

Flat Elements

Grp	Number	Node	Node	Node	Node	Mat	t[m]	C[kN/m3]	direction	local x	
82	820443	34315	2212	34474	34476	32	0.300+		1.000	0.000	0.000
82	820444	34474	2912	34475	34476	32	0.300+		1.000	0.000	0.000
82	820445	33322	34477	34480	34250	32	0.300+		1.000	0.000	0.000
82	820446	34477	33356	34478	34480	32	0.300+		1.000	0.000	0.000
82	820447	34478	2913	34479	34480	32	0.300+		1.000	0.000	0.000
82	820448	34479	2213	34250	34480	32	0.300+		1.000	0.000	0.000
82	820449	33356	34477	34482	34481	32	0.300+		1.000	0.000	0.000
82	820450	34477	33322	34176	34482	32	0.300+		1.000	0.000	0.000
82	820451	34176	33321	34468	34482	32	0.300+		1.000	0.000	0.000
82	820452	34468	33355	34481	34482	32	0.300+		1.000	0.000	0.000
82	820453	2210	34082	34485	34170	32	0.300+		1.000	0.000	0.000
82	820454	34082	33346	34483	34485	32	0.300+		1.000	0.000	0.000
82	820455	34483	33592	34484	34485	32	0.300+		1.000	0.000	0.000
82	820456	34484	2211	34170	34485	32	0.300+		1.000	0.000	0.000
82	820457	2913	34486	34488	34479	32	0.300+		1.000	0.000	0.000
82	820458	34486	33357	34487	34488	32	0.300+		1.000	0.000	0.000
82	820459	34487	22213	34300	34488	32	0.300+		1.000	0.000	0.000
82	820460	34300	2213	34479	34488	32	0.300+		1.000	0.000	0.000
82	820461	33407	34489	34492	34491	32	0.300+		1.000	0.000	0.000
82	820462	34489	3210	34205	34492	32	0.300+		1.000	0.000	0.000
82	820463	34205	2214	34490	34492	32	0.300+		1.000	0.000	0.000
82	820464	34490	33591	34491	34492	32	0.300+		1.000	0.000	0.000
82	820465	2912	34474	34495	34494	32	0.300+		1.000	0.000	0.000
82	820466	34474	2212	34164	34495	32	0.300+		1.000	0.000	0.000
82	820467	34164	22212	34493	34495	32	0.300+		1.000	0.000	0.000
82	820468	34493	33351	34494	34495	32	0.300+		1.000	0.000	0.000
82	820469	3910	34496	34500	34499	32	0.300+		1.000	0.000	0.000
82	820470	34496	33408	34497	34500	32	0.300+		1.000	0.000	0.000
82	820471	34497	33590	34498	34500	32	0.300+		1.000	0.000	0.000
82	820472	34498	2914	34499	34500	32	0.300+		1.000	0.000	0.000
82	820473	2910	34501	34503	34094	32	0.300+		1.000	0.000	0.000
82	820474	34501	2911	34502	34503	32	0.300+		1.000	0.000	0.000
82	820475	34502	33592	34483	34503	32	0.300+		1.000	0.000	0.000
82	820476	34483	33346	34094	34503	32	0.300+		1.000	0.000	0.000
82	820477	33357	34504	34506	34487	32	0.300+		1.000	0.000	0.000
82	820478	34504	33358	34505	34506	32	0.300+		1.000	0.000	0.000
82	820479	34505	33472	34295	34506	32	0.300+		1.000	0.000	0.000
82	820480	34295	22213	34487	34506	32	0.300+		1.000	0.000	0.000
82	820481	2214	34297	34509	34490	32	0.300+		1.000	0.000	0.000
82	820482	34297	33473	34507	34509	32	0.300+		1.000	0.000	0.000
82	820483	34507	33595	34508	34509	32	0.300+		1.000	0.000	0.000
82	820484	34508	33591	34490	34509	32	0.300+		1.000	0.000	0.000
82	820485	33347	34510	34514	34513	32	0.300+		1.000	0.000	0.000
82	820486	34510	33348	34511	34514	32	0.300+		1.000	0.000	0.000
82	820487	34511	33593	34512	34514	32	0.300+		1.000	0.000	0.000
82	820488	34512	33592	34513	34514	32	0.300+		1.000	0.000	0.000
82	820489	33595	34515	34518	34517	32	0.300+		1.000	0.000	0.000
82	820490	34515	33472	34505	34518	32	0.300+		1.000	0.000	0.000
82	820491	34505	33358	34516	34518	32	0.300+		1.000	0.000	0.000
82	820492	34516	33359	34517	34518	32	0.300+		1.000	0.000	0.000
82	820493	33359	34519	34522	34517	32	0.300+		1.000	0.000	0.000
82	820494	34519	33360	34520	34522	32	0.300+		1.000	0.000	0.000
82	820495	34520	33590	34521	34522	32	0.300+		1.000	0.000	0.000
82	820496	34521	33595	34517	34522	32	0.300+		1.000	0.000	0.000
82	820497	33408	34523	34525	34497	32	0.300+		1.000	0.000	0.000
82	820498	34523	33407	34491	34525	32	0.300+		1.000	0.000	0.000
82	820499	34491	33591	34524	34525	32	0.300+		1.000	0.000	0.000
82	820500	34524	33590	34497	34525	32	0.300+		1.000	0.000	0.000
82	820501	33592	34512	34527	34484	32	0.300+		1.000	0.000	0.000
82	820502	34512	33593	34526	34527	32	0.300+		1.000	0.000	0.000
82	820503	34526	33317	34239	34527	32	0.300+		1.000	0.000	0.000
82	820504	34239	2211	34484	34527	32	0.300+		1.000	0.000	0.000
82	820505	33351	34493	34531	34530	32	0.300+		1.000	0.000	0.000
82	820506	34493	22212	34528	34531	32	0.300+		1.000	0.000	0.000
82	820507	34528	33594	34529	34531	32	0.300+		1.000	0.000	0.000

SOFiSTiK AG - www.sofistik.de

Composite bridge 38+50+38, b=14.25m, 2x2HL1100R HISTAR460 , slab 0.30m C30/37

Flat Elements

Grp	Number	Node	Node	Node	Node	Mat	t[m]	C[kN/m3]	direction	local x	
82	820508	34529	33350	34530	34531	32	0.300+		1.000	0.000	0.000
82	820509	33348	34532	34535	34511	32	0.300+		1.000	0.000	0.000
82	820510	34532	33349	34533	34535	32	0.300+		1.000	0.000	0.000
82	820511	34533	33594	34534	34535	32	0.300+		1.000	0.000	0.000
82	820512	34534	33593	34511	34535	32	0.300+		1.000	0.000	0.000
82	820513	22212	34283	34536	34528	32	0.300+		1.000	0.000	0.000
82	820514	34283	33317	34526	34536	32	0.300+		1.000	0.000	0.000
82	820515	34526	33593	34534	34536	32	0.300+		1.000	0.000	0.000
82	820516	34534	33594	34528	34536	32	0.300+		1.000	0.000	0.000
82	820517	33347	34513	34538	34537	32	0.300+		1.000	0.000	0.000
82	820518	33592	34502	34538	34513	32	0.300+		1.000	0.000	0.000
82	820519	2911	34537	34538	34502	32	0.300+		1.000	0.000	0.000
82	820520	33350	34529	34540	34539	32	0.300+		1.000	0.000	0.000
82	820521	33594	34533	34540	34529	32	0.300+		1.000	0.000	0.000
82	820522	33349	34539	34540	34533	32	0.300+		1.000	0.000	0.000
82	820523	33473	34230	34541	34507	32	0.300+		1.000	0.000	0.000
82	820524	33472	34515	34541	34230	32	0.300+		1.000	0.000	0.000
82	820525	33595	34507	34541	34515	32	0.300+		1.000	0.000	0.000
82	820526	2914	34498	34543	34542	32	0.300+		1.000	0.000	0.000
82	820527	33590	34520	34543	34498	32	0.300+		1.000	0.000	0.000
82	820528	33360	34542	34543	34520	32	0.300+		1.000	0.000	0.000
82	820529	33590	34524	34544	34521	32	0.300+		1.000	0.000	0.000
82	820530	33591	34508	34544	34524	32	0.300+		1.000	0.000	0.000
82	820531	33595	34521	34544	34508	32	0.300+		1.000	0.000	0.000
83	830001	33605	34545	33598	34548	32	0.300+		1.000	0.000	0.000
83	830002	34545	33599	34546	33598	32	0.300+		1.000	0.000	0.000
83	830003	34546	33607	34547	33598	32	0.300+		1.000	0.000	0.000
83	830004	34547	33597	34548	33598	32	0.300+		1.000	0.000	0.000
83	830005	33606	34549	34553	34552	32	0.300+		1.000	0.000	0.000
83	830006	34549	23213	34550	34553	32	0.300+		1.000	0.000	0.000
83	830007	34550	33478	34551	34553	32	0.300+		1.000	0.000	0.000
83	830008	34551	33596	34552	34553	32	0.300+		1.000	0.000	0.000
83	830009	23213	34549	34557	34556	32	0.300+		1.000	0.000	0.000
83	830010	34549	33606	34554	34557	32	0.300+		1.000	0.000	0.000
83	830011	34554	33624	34555	34557	32	0.300+		1.000	0.000	0.000
83	830012	34555	3213	34556	34557	32	0.300+		1.000	0.000	0.000
83	830013	33597	34558	34561	34548	32	0.300+		1.000	0.000	0.000
83	830014	34558	33431	34559	34561	32	0.300+		1.000	0.000	0.000
83	830015	34559	33430	34560	34561	32	0.300+		1.000	0.000	0.000
83	830016	34560	33605	34548	34561	32	0.300+		1.000	0.000	0.000
83	830017	33431	34558	34565	34564	32	0.300+		1.000	0.000	0.000
83	830018	34558	33597	34562	34565	32	0.300+		1.000	0.000	0.000
83	830019	34562	33596	34563	34565	32	0.300+		1.000	0.000	0.000
83	830020	34563	33602	34564	34565	32	0.300+		1.000	0.000	0.000
83	830021	33384	34566	34570	34569	32	0.300+		1.000	0.000	0.000
83	830022	34566	33620	34567	34570	32	0.300+		1.000	0.000	0.000
83	830023	34567	33622	34568	34570	32	0.300+		1.000	0.000	0.000
83	830024	34568	33383	34569	34570	32	0.300+		1.000	0.000	0.000
83	830025	33620	34566	34574	34573	32	0.300+		1.000	0.000	0.000
83	830026	34566	33384	34571	34574	32	0.300+		1.000	0.000	0.000
83	830027	34571	33385	34572	34574	32	0.300+		1.000	0.000	0.000
83	830028	34572	33623	34573	34574	32	0.300+		1.000	0.000	0.000
83	830029	33368	34575	34579	34578	32	0.300+		1.000	0.000	0.000
83	830030	34575	33614	34576	34579	32	0.300+		1.000	0.000	0.000
83	830031	34576	33613	34577	34579	32	0.300+		1.000	0.000	0.000
83	830032	34577	33369	34578	34579	32	0.300+		1.000	0.000	0.000
83	830033	4210	34580	34584	34583	32	0.300+		1.000	0.000	0.000
83	830034	34580	33432	34581	34584	32	0.300+		1.000	0.000	0.000
83	830035	34581	33602	34582	34584	32	0.300+		1.000	0.000	0.000
83	830036	34582	3214	34583	34584	32	0.300+		1.000	0.000	0.000
83	830037	3210	34585	34588	34203	32	0.300+		1.000	0.000	0.000
83	830038	34585	3211	34586	34588	32	0.300+		1.000	0.000	0.000
83	830039	34586	33611	34587	34588	32	0.300+		1.000	0.000	0.000
83	830040	34587	33364	34203	34588	32	0.300+		1.000	0.000	0.000
83	830041	33610	34589	34593	34592	32	0.300+		1.000	0.000	0.000

SOFiSTiK AG - www.sofistik.de

Composite bridge 38+50+38, b=14.25m, 2x2HL1100R HISTAR460 , slab 0.30m C30/37

Flat Elements

Grp	Number	Node	Node	Node	Node	Mat	t[m]	C[kN/m3]	direction	local x	
83	830042	34589	33618	34590	34593	32	0.300+		1.000	0.000	0.000
83	830043	34590	33619	34591	34593	32	0.300+		1.000	0.000	0.000
83	830044	34591	33609	34592	34593	32	0.300+		1.000	0.000	0.000
83	830045	3114	34594	34598	34597	32	0.300+		1.000	0.000	0.000
83	830046	34594	33477	34595	34598	32	0.300+		1.000	0.000	0.000
83	830047	34595	33600	34596	34598	32	0.300+		1.000	0.000	0.000
83	830048	34596	33601	34597	34598	32	0.300+		1.000	0.000	0.000
83	830049	33233	34599	34602	34601	32	0.300+		1.000	0.000	0.000
83	830050	34599	3116	34600	34602	32	0.300+		1.000	0.000	0.000
83	830051	34600	33620	34573	34602	32	0.300+		1.000	0.000	0.000
83	830052	34573	33623	34601	34602	32	0.300+		1.000	0.000	0.000
83	830053	33372	34603	34607	34606	32	0.300+		1.000	0.000	0.000
83	830054	34603	33619	34604	34607	32	0.300+		1.000	0.000	0.000
83	830055	34604	33617	34605	34607	32	0.300+		1.000	0.000	0.000
83	830056	34605	23112	34606	34607	32	0.300+		1.000	0.000	0.000
83	830057	3116	34608	34610	34600	32	0.300+		1.000	0.000	0.000
83	830058	34608	33232	34609	34610	32	0.300+		1.000	0.000	0.000
83	830059	34609	33622	34567	34610	32	0.300+		1.000	0.000	0.000
83	830060	34567	33620	34600	34610	32	0.300+		1.000	0.000	0.000
83	830061	33234	34611	34615	34614	32	0.300+		1.000	0.000	0.000
83	830062	34611	3117	34612	34615	32	0.300+		1.000	0.000	0.000
83	830063	34612	33601	34613	34615	32	0.300+		1.000	0.000	0.000
83	830064	34613	33604	34614	34615	32	0.300+		1.000	0.000	0.000
83	830065	33371	34616	34619	34618	32	0.300+		1.000	0.000	0.000
83	830066	34616	33608	34617	34619	32	0.300+		1.000	0.000	0.000
83	830067	34617	33619	34603	34619	32	0.300+		1.000	0.000	0.000
83	830068	34603	33372	34618	34619	32	0.300+		1.000	0.000	0.000
83	830069	3110	34254	34623	34622	32	0.300+		1.000	0.000	0.000
83	830070	34254	33361	34620	34623	32	0.300+		1.000	0.000	0.000
83	830071	34620	33616	34621	34623	32	0.300+		1.000	0.000	0.000
83	830072	34621	33231	34622	34623	32	0.300+		1.000	0.000	0.000
83	830073	33621	34624	34627	34626	32	0.300+		1.000	0.000	0.000
83	830074	34624	3212	34625	34627	32	0.300+		1.000	0.000	0.000
83	830075	34625	33383	34568	34627	32	0.300+		1.000	0.000	0.000
83	830076	34568	33622	34626	34627	32	0.300+		1.000	0.000	0.000
83	830077	33608	34628	34632	34631	32	0.300+		1.000	0.000	0.000
83	830078	34628	33370	34629	34632	32	0.300+		1.000	0.000	0.000
83	830079	34629	33613	34630	34632	32	0.300+		1.000	0.000	0.000
83	830080	34630	33612	34631	34632	32	0.300+		1.000	0.000	0.000
83	830081	33234	34614	34636	34635	32	0.300+		1.000	0.000	0.000
83	830082	34614	33604	34633	34636	32	0.300+		1.000	0.000	0.000
83	830083	34633	33428	34634	34636	32	0.300+		1.000	0.000	0.000
83	830084	34634	4110	34635	34636	32	0.300+		1.000	0.000	0.000
83	830085	23112	34605	34640	34639	32	0.300+		1.000	0.000	0.000
83	830086	34605	33617	34637	34640	32	0.300+		1.000	0.000	0.000
83	830087	34637	33621	34638	34640	32	0.300+		1.000	0.000	0.000
83	830088	34638	3112	34639	34640	32	0.300+		1.000	0.000	0.000
83	830089	33615	34641	34645	34644	32	0.300+		1.000	0.000	0.000
83	830090	34641	33362	34642	34645	32	0.300+		1.000	0.000	0.000
83	830091	34642	33609	34643	34645	32	0.300+		1.000	0.000	0.000
83	830092	34643	33612	34644	34645	32	0.300+		1.000	0.000	0.000
83	830093	33430	34646	34648	34560	32	0.300+		1.000	0.000	0.000
83	830094	34646	33429	34647	34648	32	0.300+		1.000	0.000	0.000
83	830095	34647	33599	34545	34648	32	0.300+		1.000	0.000	0.000
83	830096	34545	33605	34560	34648	32	0.300+		1.000	0.000	0.000
83	830097	33610	34649	34652	34589	32	0.300+		1.000	0.000	0.000
83	830098	34649	33611	34650	34652	32	0.300+		1.000	0.000	0.000
83	830099	34650	33382	34651	34652	32	0.300+		1.000	0.000	0.000
83	830100	34651	33618	34589	34652	32	0.300+		1.000	0.000	0.000
83	830101	33623	34653	34656	34601	32	0.300+		1.000	0.000	0.000
83	830102	34653	33624	34654	34656	32	0.300+		1.000	0.000	0.000
83	830103	34654	3113	34655	34656	32	0.300+		1.000	0.000	0.000
83	830104	34655	33233	34601	34656	32	0.300+		1.000	0.000	0.000
83	830105	33621	34626	34658	34638	32	0.300+		1.000	0.000	0.000
83	830106	34626	33622	34609	34658	32	0.300+		1.000	0.000	0.000

SOFiSTiK AG - www.sofistik.de

Composite bridge 38+50+38, b=14.25m, 2x2HL1100R HISTAR460 , slab 0.30m C30/37

Flat Elements

Grp	Number	Node	Node	Node	Node	Mat	t[m]	C[kN/m3]	direction	local x	
83	830107	34609	33232	34657	34658	32	0.300+		1.000	0.000	0.000
83	830108	34657	3112	34638	34658	32	0.300+		1.000	0.000	0.000
83	830109	33611	34649	34660	34587	32	0.300+		1.000	0.000	0.000
83	830110	34649	33610	34659	34660	32	0.300+		1.000	0.000	0.000
83	830111	34659	33363	34159	34660	32	0.300+		1.000	0.000	0.000
83	830112	34159	33364	34587	34660	32	0.300+		1.000	0.000	0.000
83	830113	33596	34562	34662	34552	32	0.300+		1.000	0.000	0.000
83	830114	34562	33597	34547	34662	32	0.300+		1.000	0.000	0.000
83	830115	34547	33607	34661	34662	32	0.300+		1.000	0.000	0.000
83	830116	34661	33606	34552	34662	32	0.300+		1.000	0.000	0.000
83	830117	3212	34624	34665	34664	32	0.300+		1.000	0.000	0.000
83	830118	34624	33621	34637	34665	32	0.300+		1.000	0.000	0.000
83	830119	34637	33617	34663	34665	32	0.300+		1.000	0.000	0.000
83	830120	34663	23212	34664	34665	32	0.300+		1.000	0.000	0.000
83	830121	33614	34666	34667	34576	32	0.300+		1.000	0.000	0.000
83	830122	34666	33615	34644	34667	32	0.300+		1.000	0.000	0.000
83	830123	34644	33612	34630	34667	32	0.300+		1.000	0.000	0.000
83	830124	34630	33613	34576	34667	32	0.300+		1.000	0.000	0.000
83	830125	33474	34668	34671	34670	32	0.300+		1.000	0.000	0.000
83	830126	34668	33607	34546	34671	32	0.300+		1.000	0.000	0.000
83	830127	34546	33599	34669	34671	32	0.300+		1.000	0.000	0.000
83	830128	34669	33475	34670	34671	32	0.300+		1.000	0.000	0.000
83	830129	23113	34672	34674	34673	32	0.300+		1.000	0.000	0.000
83	830130	34672	3113	34654	34674	32	0.300+		1.000	0.000	0.000
83	830131	34654	33624	34554	34674	32	0.300+		1.000	0.000	0.000
83	830132	34554	33606	34673	34674	32	0.300+		1.000	0.000	0.000
83	830133	23212	34663	34676	34675	32	0.300+		1.000	0.000	0.000
83	830134	34663	33617	34604	34676	32	0.300+		1.000	0.000	0.000
83	830135	34604	33619	34590	34676	32	0.300+		1.000	0.000	0.000
83	830136	34590	33618	34675	34676	32	0.300+		1.000	0.000	0.000
83	830137	3115	34677	34681	34680	32	0.300+		1.000	0.000	0.000
83	830138	34677	33616	34678	34681	32	0.300+		1.000	0.000	0.000
83	830139	34678	33614	34679	34681	32	0.300+		1.000	0.000	0.000
83	830140	34679	3111	34680	34681	32	0.300+		1.000	0.000	0.000
83	830141	33623	34572	34683	34653	32	0.300+		1.000	0.000	0.000
83	830142	34572	33385	34682	34683	32	0.300+		1.000	0.000	0.000
83	830143	34682	3213	34555	34683	32	0.300+		1.000	0.000	0.000
83	830144	34555	33624	34653	34683	32	0.300+		1.000	0.000	0.000
83	830145	33474	34684	34685	34668	32	0.300+		1.000	0.000	0.000
83	830146	34684	23113	34673	34685	32	0.300+		1.000	0.000	0.000
83	830147	34673	33606	34661	34685	32	0.300+		1.000	0.000	0.000
83	830148	34661	33607	34668	34685	32	0.300+		1.000	0.000	0.000
83	830149	33610	34592	34686	34659	32	0.300+		1.000	0.000	0.000
83	830150	34592	33609	34642	34686	32	0.300+		1.000	0.000	0.000
83	830151	34642	33362	34286	34686	32	0.300+		1.000	0.000	0.000
83	830152	34286	33363	34659	34686	32	0.300+		1.000	0.000	0.000
83	830153	3214	34582	34688	34687	32	0.300+		1.000	0.000	0.000
83	830154	34582	33602	34563	34688	32	0.300+		1.000	0.000	0.000
83	830155	34563	33596	34551	34688	32	0.300+		1.000	0.000	0.000
83	830156	34551	33478	34687	34688	32	0.300+		1.000	0.000	0.000
83	830157	33477	34689	34692	34595	32	0.300+		1.000	0.000	0.000
83	830158	34689	33476	34690	34692	32	0.300+		1.000	0.000	0.000
83	830159	34690	33599	34691	34692	32	0.300+		1.000	0.000	0.000
83	830160	34691	33600	34595	34692	32	0.300+		1.000	0.000	0.000
83	830161	33612	34643	34693	34631	32	0.300+		1.000	0.000	0.000
83	830162	34643	33609	34591	34693	32	0.300+		1.000	0.000	0.000
83	830163	34591	33619	34617	34693	32	0.300+		1.000	0.000	0.000
83	830164	34617	33608	34631	34693	32	0.300+		1.000	0.000	0.000
83	830165	33601	34596	34696	34695	32	0.300+		1.000	0.000	0.000
83	830166	34596	33600	34691	34696	32	0.300+		1.000	0.000	0.000
83	830167	34691	33599	34694	34696	32	0.300+		1.000	0.000	0.000
83	830168	34694	33603	34695	34696	32	0.300+		1.000	0.000	0.000
83	830169	33601	34695	34698	34613	32	0.300+		1.000	0.000	0.000
83	830170	34695	33603	34697	34698	32	0.300+		1.000	0.000	0.000
83	830171	34697	33428	34633	34698	32	0.300+		1.000	0.000	0.000

SOFiSTiK AG - www.sofistik.de

Composite bridge 38+50+38, b=14.25m, 2x2HL1100R HISTAR460 , slab 0.30m C30/37

Flat Elements

Grp	Number	Node	Node	Node	Node	Mat	t[m]	C[kN/m3]	direction	local x	
83	830172	34633	33604	34613	34698	32	0.300+		1.000	0.000	0.000
83	830173	33616	34620	34700	34699	32	0.300+		1.000	0.000	0.000
83	830174	34620	33361	34273	34700	32	0.300+		1.000	0.000	0.000
83	830175	34273	33362	34641	34700	32	0.300+		1.000	0.000	0.000
83	830176	34641	33615	34699	34700	32	0.300+		1.000	0.000	0.000
83	830177	33428	34697	34703	34702	32	0.300+		1.000	0.000	0.000
83	830178	33603	34701	34703	34697	32	0.300+		1.000	0.000	0.000
83	830179	33429	34702	34703	34701	32	0.300+		1.000	0.000	0.000
83	830180	33429	34701	34704	34647	32	0.300+		1.000	0.000	0.000
83	830181	33603	34694	34704	34701	32	0.300+		1.000	0.000	0.000
83	830182	33599	34647	34704	34694	32	0.300+		1.000	0.000	0.000
83	830183	33431	34564	34706	34705	32	0.300+		1.000	0.000	0.000
83	830184	33602	34581	34706	34564	32	0.300+		1.000	0.000	0.000
83	830185	33432	34705	34706	34581	32	0.300+		1.000	0.000	0.000
83	830186	3117	34707	34708	34612	32	0.300+		1.000	0.000	0.000
83	830187	3114	34597	34708	34707	32	0.300+		1.000	0.000	0.000
83	830188	33601	34612	34708	34597	32	0.300+		1.000	0.000	0.000
83	830189	33476	34709	34710	34690	32	0.300+		1.000	0.000	0.000
83	830190	33475	34669	34710	34709	32	0.300+		1.000	0.000	0.000
83	830191	33599	34690	34710	34669	32	0.300+		1.000	0.000	0.000
83	830192	3111	34679	34712	34711	32	0.300+		1.000	0.000	0.000
83	830193	33614	34575	34712	34679	32	0.300+		1.000	0.000	0.000
83	830194	33368	34711	34712	34575	32	0.300+		1.000	0.000	0.000
83	830195	33371	34713	34714	34616	32	0.300+		1.000	0.000	0.000
83	830196	33370	34628	34714	34713	32	0.300+		1.000	0.000	0.000
83	830197	33608	34616	34714	34628	32	0.300+		1.000	0.000	0.000
83	830198	33369	34577	34716	34715	32	0.300+		1.000	0.000	0.000
83	830199	33613	34629	34716	34577	32	0.300+		1.000	0.000	0.000
83	830200	33370	34715	34716	34629	32	0.300+		1.000	0.000	0.000
83	830201	3115	34717	34718	34677	32	0.300+		1.000	0.000	0.000
83	830202	33231	34621	34718	34717	32	0.300+		1.000	0.000	0.000
83	830203	33616	34677	34718	34621	32	0.300+		1.000	0.000	0.000
83	830204	33616	34699	34719	34678	32	0.300+		1.000	0.000	0.000
83	830205	33615	34666	34719	34699	32	0.300+		1.000	0.000	0.000
83	830206	33614	34678	34719	34666	32	0.300+		1.000	0.000	0.000
83	830207	33382	34720	34721	34651	32	0.300+		1.000	0.000	0.000
83	830208	23212	34675	34721	34720	32	0.300+		1.000	0.000	0.000
83	830209	33618	34651	34721	34675	32	0.300+		1.000	0.000	0.000
83	830210	3211	34722	34723	34586	32	0.300+		1.000	0.000	0.000
83	830211	33382	34650	34723	34722	32	0.300+		1.000	0.000	0.000
83	830212	33611	34586	34723	34650	32	0.300+		1.000	0.000	0.000
83	830213	33626	34724	33629	34727	32	0.300+		1.000	0.000	0.000
83	830214	34724	33625	34725	33629	32	0.300+		1.000	0.000	0.000
83	830215	34725	33630	34726	33629	32	0.300+		1.000	0.000	0.000
83	830216	34726	33452	34727	33629	32	0.300+		1.000	0.000	0.000
83	830217	33632	34728	34732	34731	32	0.300+		1.000	0.000	0.000
83	830218	34728	33627	34729	34732	32	0.300+		1.000	0.000	0.000
83	830219	34729	33451	34730	34732	32	0.300+		1.000	0.000	0.000
83	830220	34730	33628	34731	34732	32	0.300+		1.000	0.000	0.000
83	830221	33632	34731	34736	34735	32	0.300+		1.000	0.000	0.000
83	830222	34731	33628	34733	34736	32	0.300+		1.000	0.000	0.000
83	830223	34733	3814	34734	34736	32	0.300+		1.000	0.000	0.000
83	830224	34734	33406	34735	34736	32	0.300+		1.000	0.000	0.000
83	830225	3113	34672	34740	34739	32	0.300+		1.000	0.000	0.000
83	830226	34672	23113	34737	34740	32	0.300+		1.000	0.000	0.000
83	830227	34737	33404	34738	34740	32	0.300+		1.000	0.000	0.000
83	830228	34738	3813	34739	34740	32	0.300+		1.000	0.000	0.000
83	830229	3813	34741	34743	34739	32	0.300+		1.000	0.000	0.000
83	830230	34741	33403	34742	34743	32	0.300+		1.000	0.000	0.000
83	830231	34742	33233	34655	34743	32	0.300+		1.000	0.000	0.000
83	830232	34655	3113	34739	34743	32	0.300+		1.000	0.000	0.000
83	830233	3112	34657	34747	34746	32	0.300+		1.000	0.000	0.000
83	830234	34657	33232	34744	34747	32	0.300+		1.000	0.000	0.000
83	830235	34744	33401	34745	34747	32	0.300+		1.000	0.000	0.000
83	830236	34745	3812	34746	34747	32	0.300+		1.000	0.000	0.000

SOFiSTiK AG - www.sofistik.de

Composite bridge 38+50+38, b=14.25m, 2x2HL1100R HISTAR460 , slab 0.30m C30/37

Flat Elements

Grp	Number	Node	Node	Node	Node	Mat	t[m]	C[kN/m3]	direction	local x	
83	830237	3110	34622	34750	34426	32	0.300+		1.000	0.000	0.000
83	830238	34622	33231	34748	34750	32	0.300+		1.000	0.000	0.000
83	830239	34748	33637	34749	34750	32	0.300+		1.000	0.000	0.000
83	830240	34749	33395	34426	34750	32	0.300+		1.000	0.000	0.000
83	830241	3812	34751	34753	34746	32	0.300+		1.000	0.000	0.000
83	830242	34751	33400	34752	34753	32	0.300+		1.000	0.000	0.000
83	830243	34752	23112	34639	34753	32	0.300+		1.000	0.000	0.000
83	830244	34639	3112	34746	34753	32	0.300+		1.000	0.000	0.000
83	830245	3114	34754	34757	34594	32	0.300+		1.000	0.000	0.000
83	830246	34754	33625	34755	34757	32	0.300+		1.000	0.000	0.000
83	830247	34755	33634	34756	34757	32	0.300+		1.000	0.000	0.000
83	830248	34756	33477	34594	34757	32	0.300+		1.000	0.000	0.000
83	830249	33371	34758	34761	34713	32	0.300+		1.000	0.000	0.000
83	830250	34758	33642	34759	34761	32	0.300+		1.000	0.000	0.000
83	830251	34759	33644	34760	34761	32	0.300+		1.000	0.000	0.000
83	830252	34760	33370	34713	34761	32	0.300+		1.000	0.000	0.000
83	830253	33632	34762	34765	34728	32	0.300+		1.000	0.000	0.000
83	830254	34762	33633	34763	34765	32	0.300+		1.000	0.000	0.000
83	830255	34763	33626	34764	34765	32	0.300+		1.000	0.000	0.000
83	830256	34764	33627	34728	34765	32	0.300+		1.000	0.000	0.000
83	830257	3814	34733	34768	34767	32	0.300+		1.000	0.000	0.000
83	830258	34733	33628	34730	34768	32	0.300+		1.000	0.000	0.000
83	830259	34730	33451	34766	34768	32	0.300+		1.000	0.000	0.000
83	830260	34766	4810	34767	34768	32	0.300+		1.000	0.000	0.000
83	830261	33398	34769	34773	34772	32	0.300+		1.000	0.000	0.000
83	830262	34769	33397	34770	34773	32	0.300+		1.000	0.000	0.000
83	830263	34770	33641	34771	34773	32	0.300+		1.000	0.000	0.000
83	830264	34771	33642	34772	34773	32	0.300+		1.000	0.000	0.000
83	830265	33644	34774	34778	34777	32	0.300+		1.000	0.000	0.000
83	830266	34774	33640	34775	34778	32	0.300+		1.000	0.000	0.000
83	830267	34775	33639	34776	34778	32	0.300+		1.000	0.000	0.000
83	830268	34776	33645	34777	34778	32	0.300+		1.000	0.000	0.000
83	830269	3811	34779	34782	34781	32	0.300+		1.000	0.000	0.000
83	830270	34779	3810	34387	34782	32	0.300+		1.000	0.000	0.000
83	830271	34387	33394	34780	34782	32	0.300+		1.000	0.000	0.000
83	830272	34780	33635	34781	34782	32	0.300+		1.000	0.000	0.000
83	830273	3116	34599	34785	34784	32	0.300+		1.000	0.000	0.000
83	830274	34599	33233	34742	34785	32	0.300+		1.000	0.000	0.000
83	830275	34742	33403	34783	34785	32	0.300+		1.000	0.000	0.000
83	830276	34783	33402	34784	34785	32	0.300+		1.000	0.000	0.000
83	830277	33402	34786	34787	34784	32	0.300+		1.000	0.000	0.000
83	830278	34786	33401	34744	34787	32	0.300+		1.000	0.000	0.000
83	830279	34744	33232	34608	34787	32	0.300+		1.000	0.000	0.000
83	830280	34608	3116	34784	34787	32	0.300+		1.000	0.000	0.000
83	830281	3111	34711	34791	34790	32	0.300+		1.000	0.000	0.000
83	830282	34711	33368	34788	34791	32	0.300+		1.000	0.000	0.000
83	830283	34788	33639	34789	34791	32	0.300+		1.000	0.000	0.000
83	830284	34789	33638	34790	34791	32	0.300+		1.000	0.000	0.000
83	830285	33368	34578	34793	34788	32	0.300+		1.000	0.000	0.000
83	830286	34578	33369	34792	34793	32	0.300+		1.000	0.000	0.000
83	830287	34792	33645	34776	34793	32	0.300+		1.000	0.000	0.000
83	830288	34776	33639	34788	34793	32	0.300+		1.000	0.000	0.000
83	830289	33234	34794	34796	34611	32	0.300+		1.000	0.000	0.000
83	830290	34794	33630	34725	34796	32	0.300+		1.000	0.000	0.000
83	830291	34725	33625	34795	34796	32	0.300+		1.000	0.000	0.000
83	830292	34795	3117	34611	34796	32	0.300+		1.000	0.000	0.000
83	830293	33400	34797	34799	34752	32	0.300+		1.000	0.000	0.000
83	830294	34797	33399	34798	34799	32	0.300+		1.000	0.000	0.000
83	830295	34798	33372	34606	34799	32	0.300+		1.000	0.000	0.000
83	830296	34606	23112	34752	34799	32	0.300+		1.000	0.000	0.000
83	830297	33474	34800	34802	34684	32	0.300+		1.000	0.000	0.000
83	830298	34800	33631	34801	34802	32	0.300+		1.000	0.000	0.000
83	830299	34801	33404	34737	34802	32	0.300+		1.000	0.000	0.000
83	830300	34737	23113	34684	34802	32	0.300+		1.000	0.000	0.000
83	830301	33474	34670	34805	34800	32	0.300+		1.000	0.000	0.000

SOFiSTiK AG - www.sofistik.de

Composite bridge 38+50+38, b=14.25m, 2x2HL1100R HISTAR460 , slab 0.30m C30/37

Flat Elements

Grp	Number	Node	Node	Node	Node	Mat	t[m]	C[kN/m3]	direction	local x	
83	830302	34670	33475	34803	34805	32	0.300+		1.000	0.000	0.000
83	830303	34803	33633	34804	34805	32	0.300+		1.000	0.000	0.000
83	830304	34804	33631	34800	34805	32	0.300+		1.000	0.000	0.000
83	830305	33636	34806	34809	34808	32	0.300+		1.000	0.000	0.000
83	830306	34806	33637	34807	34809	32	0.300+		1.000	0.000	0.000
83	830307	34807	33639	34775	34809	32	0.300+		1.000	0.000	0.000
83	830308	34775	33640	34808	34809	32	0.300+		1.000	0.000	0.000
83	830309	33642	34758	34812	34811	32	0.300+		1.000	0.000	0.000
83	830310	34758	33371	34618	34812	32	0.300+		1.000	0.000	0.000
83	830311	34618	33372	34810	34812	32	0.300+		1.000	0.000	0.000
83	830312	34810	33643	34811	34812	32	0.300+		1.000	0.000	0.000
83	830313	33234	34635	34814	34794	32	0.300+		1.000	0.000	0.000
83	830314	34635	4110	34813	34814	32	0.300+		1.000	0.000	0.000
83	830315	34813	33452	34726	34814	32	0.300+		1.000	0.000	0.000
83	830316	34726	33630	34794	34814	32	0.300+		1.000	0.000	0.000
83	830317	33397	34815	34818	34770	32	0.300+		1.000	0.000	0.000
83	830318	34815	33396	34816	34818	32	0.300+		1.000	0.000	0.000
83	830319	34816	33635	34817	34818	32	0.300+		1.000	0.000	0.000
83	830320	34817	33641	34770	34818	32	0.300+		1.000	0.000	0.000
83	830321	33640	34819	34821	34808	32	0.300+		1.000	0.000	0.000
83	830322	34819	33641	34817	34821	32	0.300+		1.000	0.000	0.000
83	830323	34817	33635	34820	34821	32	0.300+		1.000	0.000	0.000
83	830324	34820	33636	34808	34821	32	0.300+		1.000	0.000	0.000
83	830325	33406	34822	34825	34735	32	0.300+		1.000	0.000	0.000
83	830326	34822	33405	34823	34825	32	0.300+		1.000	0.000	0.000
83	830327	34823	33631	34824	34825	32	0.300+		1.000	0.000	0.000
83	830328	34824	33632	34735	34825	32	0.300+		1.000	0.000	0.000
83	830329	33475	34709	34828	34803	32	0.300+		1.000	0.000	0.000
83	830330	34709	33476	34826	34828	32	0.300+		1.000	0.000	0.000
83	830331	34826	33634	34827	34828	32	0.300+		1.000	0.000	0.000
83	830332	34827	33633	34803	34828	32	0.300+		1.000	0.000	0.000
83	830333	3115	34829	34831	34717	32	0.300+		1.000	0.000	0.000
83	830334	34829	33638	34830	34831	32	0.300+		1.000	0.000	0.000
83	830335	34830	33637	34748	34831	32	0.300+		1.000	0.000	0.000
83	830336	34748	33231	34717	34831	32	0.300+		1.000	0.000	0.000
83	830337	33625	34724	34832	34755	32	0.300+		1.000	0.000	0.000
83	830338	34724	33626	34763	34832	32	0.300+		1.000	0.000	0.000
83	830339	34763	33633	34827	34832	32	0.300+		1.000	0.000	0.000
83	830340	34827	33634	34755	34832	32	0.300+		1.000	0.000	0.000
83	830341	33640	34774	34833	34819	32	0.300+		1.000	0.000	0.000
83	830342	34774	33644	34759	34833	32	0.300+		1.000	0.000	0.000
83	830343	34759	33642	34771	34833	32	0.300+		1.000	0.000	0.000
83	830344	34771	33641	34819	34833	32	0.300+		1.000	0.000	0.000
83	830345	33451	34729	34835	34834	32	0.300+		1.000	0.000	0.000
83	830346	34729	33627	34764	34835	32	0.300+		1.000	0.000	0.000
83	830347	34764	33626	34727	34835	32	0.300+		1.000	0.000	0.000
83	830348	34727	33452	34834	34835	32	0.300+		1.000	0.000	0.000
83	830349	33394	34447	34837	34836	32	0.300+		1.000	0.000	0.000
83	830350	34447	33395	34749	34837	32	0.300+		1.000	0.000	0.000
83	830351	34749	33637	34806	34837	32	0.300+		1.000	0.000	0.000
83	830352	34806	33636	34836	34837	32	0.300+		1.000	0.000	0.000
83	830353	33399	34838	34840	34839	32	0.300+		1.000	0.000	0.000
83	830354	34838	33398	34772	34840	32	0.300+		1.000	0.000	0.000
83	830355	34772	33642	34811	34840	32	0.300+		1.000	0.000	0.000
83	830356	34811	33643	34839	34840	32	0.300+		1.000	0.000	0.000
83	830357	3114	34707	34841	34754	32	0.300+		1.000	0.000	0.000
83	830358	3117	34795	34841	34707	32	0.300+		1.000	0.000	0.000
83	830359	33625	34754	34841	34795	32	0.300+		1.000	0.000	0.000
83	830360	33405	34842	34843	34823	32	0.300+		1.000	0.000	0.000
83	830361	33404	34801	34843	34842	32	0.300+		1.000	0.000	0.000
83	830362	33631	34823	34843	34801	32	0.300+		1.000	0.000	0.000
83	830363	33632	34824	34844	34762	32	0.300+		1.000	0.000	0.000
83	830364	33631	34804	34844	34824	32	0.300+		1.000	0.000	0.000
83	830365	33633	34762	34844	34804	32	0.300+		1.000	0.000	0.000
83	830366	33477	34756	34845	34689	32	0.300+		1.000	0.000	0.000

SOFiSTiK AG - www.sofistik.de

Composite bridge 38+50+38, b=14.25m, 2x2HL1100R HISTAR460 , slab 0.30m C30/37

Flat Elements

Grp	Number	Node	Node	Node	Node	Mat	t[m]	C[kN/m3]	direction	local x	
83	830367	33634	34826	34845	34756	32	0.300+		1.000	0.000	0.000
83	830368	33476	34689	34845	34826	32	0.300+		1.000	0.000	0.000
83	830369	33635	34780	34846	34820	32	0.300+		1.000	0.000	0.000
83	830370	33394	34836	34846	34780	32	0.300+		1.000	0.000	0.000
83	830371	33636	34820	34846	34836	32	0.300+		1.000	0.000	0.000
83	830372	3111	34790	34847	34680	32	0.300+		1.000	0.000	0.000
83	830373	33638	34829	34847	34790	32	0.300+		1.000	0.000	0.000
83	830374	3115	34680	34847	34829	32	0.300+		1.000	0.000	0.000
83	830375	33643	34810	33372	34798	32	0.300+		1.000	0.000	0.000
83	830376	34798	33399	34839	33643	32	0.300+		1.000	0.000	0.000
83	830377	33369	34715	34849	34792	32	0.300+		1.000	0.000	0.000
83	830378	33370	34848	34849	34715	32	0.300+		1.000	0.000	0.000
83	830379	33645	34792	34849	34848	32	0.300+		1.000	0.000	0.000
83	830380	33645	34848	34850	34777	32	0.300+		1.000	0.000	0.000
83	830381	33370	34760	34850	34848	32	0.300+		1.000	0.000	0.000
83	830382	33644	34777	34850	34760	32	0.300+		1.000	0.000	0.000
83	830383	3811	34781	34852	34851	32	0.300+		1.000	0.000	0.000
83	830384	33635	34816	34852	34781	32	0.300+		1.000	0.000	0.000
83	830385	33396	34851	34852	34816	32	0.300+		1.000	0.000	0.000
83	830386	33638	34789	34853	34830	32	0.300+		1.000	0.000	0.000
83	830387	33639	34807	34853	34789	32	0.300+		1.000	0.000	0.000
83	830388	33637	34830	34853	34807	32	0.300+		1.000	0.000	0.000
83	830389	33647	34854	34857	34856	32	0.300+		1.000	0.000	0.000
83	830390	34854	33648	34855	34857	32	0.300+		1.000	0.000	0.000
83	830391	34855	23212	34720	34857	32	0.300+		1.000	0.000	0.000
83	830392	34720	33382	34856	34857	32	0.300+		1.000	0.000	0.000
83	830393	33648	34854	34861	34860	32	0.300+		1.000	0.000	0.000
83	830394	34854	33647	34858	34861	32	0.300+		1.000	0.000	0.000
83	830395	34858	33410	34859	34861	32	0.300+		1.000	0.000	0.000
83	830396	34859	33411	34860	34861	32	0.300+		1.000	0.000	0.000
83	830397	33385	34862	34865	34682	32	0.300+		1.000	0.000	0.000
83	830398	34862	33416	34863	34865	32	0.300+		1.000	0.000	0.000
83	830399	34863	3913	34864	34865	32	0.300+		1.000	0.000	0.000
83	830400	34864	3213	34682	34865	32	0.300+		1.000	0.000	0.000
83	830401	33416	34862	34868	34867	32	0.300+		1.000	0.000	0.000
83	830402	34862	33385	34571	34868	32	0.300+		1.000	0.000	0.000
83	830403	34571	33384	34866	34868	32	0.300+		1.000	0.000	0.000
83	830404	34866	33415	34867	34868	32	0.300+		1.000	0.000	0.000
83	830405	33415	34866	34871	34870	32	0.300+		1.000	0.000	0.000
83	830406	34866	33384	34569	34871	32	0.300+		1.000	0.000	0.000
83	830407	34569	33383	34869	34871	32	0.300+		1.000	0.000	0.000
83	830408	34869	33414	34870	34871	32	0.300+		1.000	0.000	0.000
83	830409	33414	34869	34874	34873	32	0.300+		1.000	0.000	0.000
83	830410	34869	33383	34625	34874	32	0.300+		1.000	0.000	0.000
83	830411	34625	3212	34872	34874	32	0.300+		1.000	0.000	0.000
83	830412	34872	3912	34873	34874	32	0.300+		1.000	0.000	0.000
83	830413	3213	34864	34877	34556	32	0.300+		1.000	0.000	0.000
83	830414	34864	3913	34875	34877	32	0.300+		1.000	0.000	0.000
83	830415	34875	33417	34876	34877	32	0.300+		1.000	0.000	0.000
83	830416	34876	23213	34556	34877	32	0.300+		1.000	0.000	0.000
83	830417	33417	34878	34880	34876	32	0.300+		1.000	0.000	0.000
83	830418	34878	33418	34879	34880	32	0.300+		1.000	0.000	0.000
83	830419	34879	33478	34550	34880	32	0.300+		1.000	0.000	0.000
83	830420	34550	23213	34876	34880	32	0.300+		1.000	0.000	0.000
83	830421	4210	34583	34884	34883	32	0.300+		1.000	0.000	0.000
83	830422	34583	3214	34881	34884	32	0.300+		1.000	0.000	0.000
83	830423	34881	33650	34882	34884	32	0.300+		1.000	0.000	0.000
83	830424	34882	33456	34883	34884	32	0.300+		1.000	0.000	0.000
83	830425	33646	34885	34888	34887	32	0.300+		1.000	0.000	0.000
83	830426	34885	33409	34886	34888	32	0.300+		1.000	0.000	0.000
83	830427	34886	33410	34858	34888	32	0.300+		1.000	0.000	0.000
83	830428	34858	33647	34887	34888	32	0.300+		1.000	0.000	0.000
83	830429	3912	34872	34891	34890	32	0.300+		1.000	0.000	0.000
83	830430	34872	3212	34664	34891	32	0.300+		1.000	0.000	0.000
83	830431	34664	23212	34889	34891	32	0.300+		1.000	0.000	0.000

SOFiSTiK AG - www.sofistik.de

Composite bridge 38+50+38, b=14.25m, 2x2HL1100R HISTAR460 , slab 0.30m C30/37

Flat Elements

Grp	Number	Node	Node	Node	Node	Mat	t[m]	C[kN/m3]	direction	local x	
83	830432	34889	33413	34890	34891	32	0.300+		1.000	0.000	0.000
83	830433	33408	34892	34895	34894	32	0.300+		1.000	0.000	0.000
83	830434	34892	3911	34893	34895	32	0.300+		1.000	0.000	0.000
83	830435	34893	33409	34885	34895	32	0.300+		1.000	0.000	0.000
83	830436	34885	33646	34894	34895	32	0.300+		1.000	0.000	0.000
83	830437	33646	34887	34897	34896	32	0.300+		1.000	0.000	0.000
83	830438	34887	33647	34856	34897	32	0.300+		1.000	0.000	0.000
83	830439	34856	33382	34722	34897	32	0.300+		1.000	0.000	0.000
83	830440	34722	3211	34896	34897	32	0.300+		1.000	0.000	0.000
83	830441	3210	34489	34899	34585	32	0.300+		1.000	0.000	0.000
83	830442	34489	33407	34898	34899	32	0.300+		1.000	0.000	0.000
83	830443	34898	33646	34896	34899	32	0.300+		1.000	0.000	0.000
83	830444	34896	3211	34585	34899	32	0.300+		1.000	0.000	0.000
83	830445	3914	34900	34904	34903	32	0.300+		1.000	0.000	0.000
83	830446	34900	4910	34901	34904	32	0.300+		1.000	0.000	0.000
83	830447	34901	33456	34902	34904	32	0.300+		1.000	0.000	0.000
83	830448	34902	33649	34903	34904	32	0.300+		1.000	0.000	0.000
83	830449	33413	34889	34907	34906	32	0.300+		1.000	0.000	0.000
83	830450	34889	23212	34855	34907	32	0.300+		1.000	0.000	0.000
83	830451	34855	33648	34905	34907	32	0.300+		1.000	0.000	0.000
83	830452	34905	33412	34906	34907	32	0.300+		1.000	0.000	0.000
83	830453	33419	34908	34911	34910	32	0.300+		1.000	0.000	0.000
83	830454	34908	33650	34909	34911	32	0.300+		1.000	0.000	0.000
83	830455	34909	33478	34879	34911	32	0.300+		1.000	0.000	0.000
83	830456	34879	33418	34910	34911	32	0.300+		1.000	0.000	0.000
83	830457	33407	34523	34912	34898	32	0.300+		1.000	0.000	0.000
83	830458	33408	34894	34912	34523	32	0.300+		1.000	0.000	0.000
83	830459	33646	34898	34912	34894	32	0.300+		1.000	0.000	0.000
83	830460	3910	34913	34914	34496	32	0.300+		1.000	0.000	0.000
83	830461	3911	34892	34914	34913	32	0.300+		1.000	0.000	0.000
83	830462	33408	34496	34914	34892	32	0.300+		1.000	0.000	0.000
83	830463	33412	34905	34916	34915	32	0.300+		1.000	0.000	0.000
83	830464	33648	34860	34916	34905	32	0.300+		1.000	0.000	0.000
83	830465	33411	34915	34916	34860	32	0.300+		1.000	0.000	0.000
83	830466	33478	34909	34917	34687	32	0.300+		1.000	0.000	0.000
83	830467	33650	34881	34917	34909	32	0.300+		1.000	0.000	0.000
83	830468	3214	34687	34917	34881	32	0.300+		1.000	0.000	0.000
83	830469	33649	34902	34919	34918	32	0.300+		1.000	0.000	0.000
83	830470	33456	34882	34919	34902	32	0.300+		1.000	0.000	0.000
83	830471	33650	34918	34919	34882	32	0.300+		1.000	0.000	0.000
83	830472	3914	34903	34922	34921	32	0.300+		1.000	0.000	0.000
83	830473	33649	34920	34922	34903	32	0.300+		1.000	0.000	0.000
83	830474	33419	34921	34922	34920	32	0.300+		1.000	0.000	0.000
83	830475	33649	34918	34923	34920	32	0.300+		1.000	0.000	0.000
83	830476	33650	34908	34923	34918	32	0.300+		1.000	0.000	0.000
83	830477	33419	34920	34923	34908	32	0.300+		1.000	0.000	0.000

+ after t :Elements are below the plane of the nodes

Beam Elements

Grp	Number	Node	x[m]	NoS	NoP	reference	Hinges	direction	local y-axis	
11	110001	1127	0.000	11	1	0.000		0.000	1.000	0.000
		35112	2.000	11		2.000				
11	110002	35112	0.000	11	1	2.000		0.000	1.000	0.000
		35113	2.000	11		4.000				
11	110003	35113	0.000	11	1	4.000		0.000	1.000	0.000
		35114	2.000	11		6.000				
11	110004	35114	0.000	11	1	6.000		0.000	1.000	0.000
		35115	2.000	11		8.000				
11	110005	35115	0.000	11	1	8.000		0.000	1.000	0.000
		35116	2.000	11		10.000				
11	110006	35116	0.000	11	1	10.000		0.000	1.000	0.000
		35117	2.000	11		12.000				
11	110007	35117	0.000	11	1	12.000		0.000	1.000	0.000
		35118	2.000	11		14.000				
11	110008	35118	0.000	11	1	14.000		0.000	1.000	0.000

SOFiSTiK AG - www.sofistik.de

Composite bridge 38+50+38, b=14.25m, 2x2HL1100R HISTAR460 , slab 0.30m C30/37

Beam Elements

Grp	Number	Node	x[m]	NoS	NoP	reference	Hinges	direction	local	y-axis
11	110008	35119	2.000	11		16.000				
11	110009	35119	0.000	11	1	16.000		0.000	1.000	0.000
		35120	2.000	11		18.000				
11	110010	35120	0.000	11	1	18.000		0.000	1.000	0.000
		1126	2.000	11		20.000				
11	110011	1137	0.000	11	1	0.000		0.000	1.000	0.000
		35121	2.000	11		2.000				
11	110012	35121	0.000	11	1	2.000		0.000	1.000	0.000
		35122	2.000	11		4.000				
11	110013	35122	0.000	11	1	4.000		0.000	1.000	0.000
		35123	2.000	11		6.000				
11	110014	35123	0.000	11	1	6.000		0.000	1.000	0.000
		35124	2.000	11		8.000				
11	110015	35124	0.000	11	1	8.000		0.000	1.000	0.000
		35125	2.000	11		10.000				
11	110016	35125	0.000	11	1	10.000		0.000	1.000	0.000
		35126	2.000	11		12.000				
11	110017	35126	0.000	11	1	12.000		0.000	1.000	0.000
		35127	2.000	11		14.000				
11	110018	35127	0.000	11	1	14.000		0.000	1.000	0.000
		35128	2.000	11		16.000				
11	110019	35128	0.000	11	1	16.000		0.000	1.000	0.000
		35129	2.000	11		18.000				
11	110020	35129	0.000	11	1	18.000		0.000	1.000	0.000
		1136	2.000	11		20.000				
11	110021	1227	0.000	11	1	0.000		0.000	1.000	0.000
		35130	2.000	11		2.000				
11	110022	35130	0.000	11	1	2.000		0.000	1.000	0.000
		35131	2.000	11		4.000				
11	110023	35131	0.000	11	1	4.000		0.000	1.000	0.000
		35132	2.000	11		6.000				
11	110024	35132	0.000	11	1	6.000		0.000	1.000	0.000
		35133	2.000	11		8.000				
11	110025	35133	0.000	11	1	8.000		0.000	1.000	0.000
		35134	2.000	11		10.000				
11	110026	35134	0.000	11	1	10.000		0.000	1.000	0.000
		35135	2.000	11		12.000				
11	110027	35135	0.000	11	1	12.000		0.000	1.000	0.000
		35136	2.000	11		14.000				
11	110028	35136	0.000	11	1	14.000		0.000	1.000	0.000
		35137	2.000	11		16.000				
11	110029	35137	0.000	11	1	16.000		0.000	1.000	0.000
		35138	2.000	11		18.000				
11	110030	35138	0.000	11	1	18.000		0.000	1.000	0.000
		1226	2.000	11		20.000				
11	110031	1237	0.000	11	1	0.000		0.000	1.000	0.000
		35139	2.000	11		2.000				
11	110032	35139	0.000	11	1	2.000		0.000	1.000	0.000
		35140	2.000	11		4.000				
11	110033	35140	0.000	11	1	4.000		0.000	1.000	0.000
		35141	2.000	11		6.000				
11	110034	35141	0.000	11	1	6.000		0.000	1.000	0.000
		35142	2.000	11		8.000				
11	110035	35142	0.000	11	1	8.000		0.000	1.000	0.000
		35143	2.000	11		10.000				
11	110036	35143	0.000	11	1	10.000		0.000	1.000	0.000
		35144	2.000	11		12.000				
11	110037	35144	0.000	11	1	12.000		0.000	1.000	0.000
		35145	2.000	11		14.000				
11	110038	35145	0.000	11	1	14.000		0.000	1.000	0.000
		35146	2.000	11		16.000				
11	110039	35146	0.000	11	1	16.000		0.000	1.000	0.000
		35147	2.000	11		18.000				
11	110040	35147	0.000	11	1	18.000		0.000	1.000	0.000
		1236	2.000	11		20.000				

SOFiSTiK AG - www.sofistik.de

Composite bridge 38+50+38, b=14.25m, 2x2HL1100R HISTAR460 , slab 0.30m C30/37

Beam Elements

Grp	Number	Node	x[m]	NoS	NoP	reference	Hinges	direction	local	y-axis
12	120001	2127	0.000	12	2	0.000		0.000	1.000	0.000
		35158	2.000	12		2.000				
12	120002	35158	0.000	12	2	2.000		0.000	1.000	0.000
		35159	2.000	12		4.000				
12	120003	35159	0.000	12	2	4.000		0.000	1.000	0.000
		35160	2.000	12		6.000				
12	120004	35160	0.000	12	2	6.000		0.000	1.000	0.000
		35161	2.000	12		8.000				
12	120005	35161	0.000	12	2	8.000		0.000	1.000	0.000
		35162	2.000	12		10.000				
12	120006	35162	0.000	12	2	10.000		0.000	1.000	0.000
		35163	2.000	12		12.000				
12	120007	35163	0.000	12	2	12.000		0.000	1.000	0.000
		35164	2.000	12		14.000				
12	120008	35164	0.000	12	2	14.000		0.000	1.000	0.000
		35165	2.000	12		16.000				
12	120009	35165	0.000	12	2	16.000		0.000	1.000	0.000
		35166	2.000	12		18.000				
12	120010	35166	0.000	12	2	18.000		0.000	1.000	0.000
		2126	2.000	12		20.000				
12	120011	2137	0.000	12	2	0.000		0.000	1.000	0.000
		35167	2.000	12		2.000				
12	120012	35167	0.000	12	2	2.000		0.000	1.000	0.000
		35168	2.000	12		4.000				
12	120013	35168	0.000	12	2	4.000		0.000	1.000	0.000
		35169	2.000	12		6.000				
12	120014	35169	0.000	12	2	6.000		0.000	1.000	0.000
		35170	2.000	12		8.000				
12	120015	35170	0.000	12	2	8.000		0.000	1.000	0.000
		35171	2.000	12		10.000				
12	120016	35171	0.000	12	2	10.000		0.000	1.000	0.000
		35172	2.000	12		12.000				
12	120017	35172	0.000	12	2	12.000		0.000	1.000	0.000
		35173	2.000	12		14.000				
12	120018	35173	0.000	12	2	14.000		0.000	1.000	0.000
		35174	2.000	12		16.000				
12	120019	35174	0.000	12	2	16.000		0.000	1.000	0.000
		35175	2.000	12		18.000				
12	120020	35175	0.000	12	2	18.000		0.000	1.000	0.000
		2136	2.000	12		20.000				
12	120021	2227	0.000	12	2	0.000		0.000	1.000	0.000
		35180	2.000	12		2.000				
12	120022	35180	0.000	12	2	2.000		0.000	1.000	0.000
		35181	2.000	12		4.000				
12	120023	35181	0.000	12	2	4.000		0.000	1.000	0.000
		35182	2.000	12		6.000				
12	120024	35182	0.000	12	2	6.000		0.000	1.000	0.000
		35183	2.000	12		8.000				
12	120025	35183	0.000	12	2	8.000		0.000	1.000	0.000
		35184	2.000	12		10.000				
12	120026	35184	0.000	12	2	10.000		0.000	1.000	0.000
		35185	2.000	12		12.000				
12	120027	35185	0.000	12	2	12.000		0.000	1.000	0.000
		35186	2.000	12		14.000				
12	120028	35186	0.000	12	2	14.000		0.000	1.000	0.000
		35187	2.000	12		16.000				
12	120029	35187	0.000	12	2	16.000		0.000	1.000	0.000
		35188	2.000	12		18.000				
12	120030	35188	0.000	12	2	18.000		0.000	1.000	0.000
		2226	2.000	12		20.000				
12	120031	2237	0.000	12	2	0.000		0.000	1.000	0.000
		35189	2.000	12		2.000				
12	120032	35189	0.000	12	2	2.000		0.000	1.000	0.000
		35190	2.000	12		4.000				
12	120033	35190	0.000	12	2	4.000		0.000	1.000	0.000

SOFiSTiK AG - www.sofistik.de

Composite bridge 38+50+38, b=14.25m, 2x2HL1100R HISTAR460 , slab 0.30m C30/37

Beam Elements

Grp	Number	Node	x[m]	NoS	NoP	reference	Hinges	direction	local	y-axis
12	120033	35191	2.000	12		6.000				
12	120034	35191	0.000	12	2	6.000		0.000	1.000	0.000
		35192	2.000	12		8.000				
12	120035	35192	0.000	12	2	8.000		0.000	1.000	0.000
		35193	2.000	12		10.000				
12	120036	35193	0.000	12	2	10.000		0.000	1.000	0.000
		35194	2.000	12		12.000				
12	120037	35194	0.000	12	2	12.000		0.000	1.000	0.000
		35195	2.000	12		14.000				
12	120038	35195	0.000	12	2	14.000		0.000	1.000	0.000
		35196	2.000	12		16.000				
12	120039	35196	0.000	12	2	16.000		0.000	1.000	0.000
		35197	2.000	12		18.000				
12	120040	35197	0.000	12	2	18.000		0.000	1.000	0.000
		2236	2.000	12		20.000				
13	130001	3127	0.000	13	3	0.000		0.000	1.000	0.000
		35212	2.000	13		2.000				
13	130002	35212	0.000	13	3	2.000		0.000	1.000	0.000
		35213	2.000	13		4.000				
13	130003	35213	0.000	13	3	4.000		0.000	1.000	0.000
		35214	2.000	13		6.000				
13	130004	35214	0.000	13	3	6.000		0.000	1.000	0.000
		35215	2.000	13		8.000				
13	130005	35215	0.000	13	3	8.000		0.000	1.000	0.000
		35216	2.000	13		10.000				
13	130006	35216	0.000	13	3	10.000		0.000	1.000	0.000
		35217	2.000	13		12.000				
13	130007	35217	0.000	13	3	12.000		0.000	1.000	0.000
		35218	2.000	13		14.000				
13	130008	35218	0.000	13	3	14.000		0.000	1.000	0.000
		35219	2.000	13		16.000				
13	130009	35219	0.000	13	3	16.000		0.000	1.000	0.000
		35220	2.000	13		18.000				
13	130010	35220	0.000	13	3	18.000		0.000	1.000	0.000
		3126	2.000	13		20.000				
13	130011	3137	0.000	13	3	0.000		0.000	1.000	0.000
		35221	2.000	13		2.000				
13	130012	35221	0.000	13	3	2.000		0.000	1.000	0.000
		35222	2.000	13		4.000				
13	130013	35222	0.000	13	3	4.000		0.000	1.000	0.000
		35223	2.000	13		6.000				
13	130014	35223	0.000	13	3	6.000		0.000	1.000	0.000
		35224	2.000	13		8.000				
13	130015	35224	0.000	13	3	8.000		0.000	1.000	0.000
		35225	2.000	13		10.000				
13	130016	35225	0.000	13	3	10.000		0.000	1.000	0.000
		35226	2.000	13		12.000				
13	130017	35226	0.000	13	3	12.000		0.000	1.000	0.000
		35227	2.000	13		14.000				
13	130018	35227	0.000	13	3	14.000		0.000	1.000	0.000
		35228	2.000	13		16.000				
13	130019	35228	0.000	13	3	16.000		0.000	1.000	0.000
		35229	2.000	13		18.000				
13	130020	35229	0.000	13	3	18.000		0.000	1.000	0.000
		3136	2.000	13		20.000				
13	130021	3227	0.000	13	3	0.000		0.000	1.000	0.000
		35234	2.000	13		2.000				
13	130022	35234	0.000	13	3	2.000		0.000	1.000	0.000
		35235	2.000	13		4.000				
13	130023	35235	0.000	13	3	4.000		0.000	1.000	0.000
		35236	2.000	13		6.000				
13	130024	35236	0.000	13	3	6.000		0.000	1.000	0.000
		35237	2.000	13		8.000				
13	130025	35237	0.000	13	3	8.000		0.000	1.000	0.000
		35238	2.000	13		10.000				

SOFiSTiK AG - www.sofistik.de

Composite bridge 38+50+38, b=14.25m, 2x2HL1100R HISTAR460 , slab 0.30m C30/37

Beam Elements

Grp	Number	Node	x[m]	NoS	NoP	reference	Hinges	direction	local	y-axis
13	130026	35238	0.000	13	3	10.000		0.000	1.000	0.000
		35239	2.000	13		12.000				
13	130027	35239	0.000	13	3	12.000		0.000	1.000	0.000
		35240	2.000	13		14.000				
13	130028	35240	0.000	13	3	14.000		0.000	1.000	0.000
		35241	2.000	13		16.000				
13	130029	35241	0.000	13	3	16.000		0.000	1.000	0.000
		35242	2.000	13		18.000				
13	130030	35242	0.000	13	3	18.000		0.000	1.000	0.000
		3226	2.000	13		20.000				
13	130031	3237	0.000	13	3	0.000		0.000	1.000	0.000
		35243	2.000	13		2.000				
13	130032	35243	0.000	13	3	2.000		0.000	1.000	0.000
		35244	2.000	13		4.000				
13	130033	35244	0.000	13	3	4.000		0.000	1.000	0.000
		35245	2.000	13		6.000				
13	130034	35245	0.000	13	3	6.000		0.000	1.000	0.000
		35246	2.000	13		8.000				
13	130035	35246	0.000	13	3	8.000		0.000	1.000	0.000
		35247	2.000	13		10.000				
13	130036	35247	0.000	13	3	10.000		0.000	1.000	0.000
		35248	2.000	13		12.000				
13	130037	35248	0.000	13	3	12.000		0.000	1.000	0.000
		35249	2.000	13		14.000				
13	130038	35249	0.000	13	3	14.000		0.000	1.000	0.000
		35250	2.000	13		16.000				
13	130039	35250	0.000	13	3	16.000		0.000	1.000	0.000
		35251	2.000	13		18.000				
13	130040	35251	0.000	13	3	18.000		0.000	1.000	0.000
		3236	2.000	13		20.000				
14	140001	4127	0.000	14	4	0.000		0.000	1.000	0.000
		35256	2.000	14		2.000				
14	140002	35256	0.000	14	4	2.000		0.000	1.000	0.000
		35257	2.000	14		4.000				
14	140003	35257	0.000	14	4	4.000		0.000	1.000	0.000
		35258	2.000	14		6.000				
14	140004	35258	0.000	14	4	6.000		0.000	1.000	0.000
		35259	2.000	14		8.000				
14	140005	35259	0.000	14	4	8.000		0.000	1.000	0.000
		35260	2.000	14		10.000				
14	140006	35260	0.000	14	4	10.000		0.000	1.000	0.000
		35261	2.000	14		12.000				
14	140007	35261	0.000	14	4	12.000		0.000	1.000	0.000
		35262	2.000	14		14.000				
14	140008	35262	0.000	14	4	14.000		0.000	1.000	0.000
		35263	2.000	14		16.000				
14	140009	35263	0.000	14	4	16.000		0.000	1.000	0.000
		35264	2.000	14		18.000				
14	140010	35264	0.000	14	4	18.000		0.000	1.000	0.000
		4126	2.000	14		20.000				
14	140011	4137	0.000	14	4	0.000		0.000	1.000	0.000
		35265	2.000	14		2.000				
14	140012	35265	0.000	14	4	2.000		0.000	1.000	0.000
		35266	2.000	14		4.000				
14	140013	35266	0.000	14	4	4.000		0.000	1.000	0.000
		35267	2.000	14		6.000				
14	140014	35267	0.000	14	4	6.000		0.000	1.000	0.000
		35268	2.000	14		8.000				
14	140015	35268	0.000	14	4	8.000		0.000	1.000	0.000
		35269	2.000	14		10.000				
14	140016	35269	0.000	14	4	10.000		0.000	1.000	0.000
		35270	2.000	14		12.000				
14	140017	35270	0.000	14	4	12.000		0.000	1.000	0.000
		35271	2.000	14		14.000				
14	140018	35271	0.000	14	4	14.000		0.000	1.000	0.000

SOFiSTiK AG - www.sofistik.de

Composite bridge 38+50+38, b=14.25m, 2x2HL1100R HISTAR460 , slab 0.30m C30/37

Beam Elements

Grp	Number	Node	x[m]	NoS	NoP	reference	Hinges	direction	local	y-axis
14	140018	35272	2.000	14		16.000				
14	140019	35272	0.000	14	4	16.000		0.000	1.000	0.000
		35273	2.000	14		18.000				
14	140020	35273	0.000	14	4	18.000		0.000	1.000	0.000
		4136	2.000	14		20.000				
14	140021	4227	0.000	14	4	0.000		0.000	1.000	0.000
		35274	2.000	14		2.000				
14	140022	35274	0.000	14	4	2.000		0.000	1.000	0.000
		35275	2.000	14		4.000				
14	140023	35275	0.000	14	4	4.000		0.000	1.000	0.000
		35276	2.000	14		6.000				
14	140024	35276	0.000	14	4	6.000		0.000	1.000	0.000
		35277	2.000	14		8.000				
14	140025	35277	0.000	14	4	8.000		0.000	1.000	0.000
		35278	2.000	14		10.000				
14	140026	35278	0.000	14	4	10.000		0.000	1.000	0.000
		35279	2.000	14		12.000				
14	140027	35279	0.000	14	4	12.000		0.000	1.000	0.000
		35280	2.000	14		14.000				
14	140028	35280	0.000	14	4	14.000		0.000	1.000	0.000
		35281	2.000	14		16.000				
14	140029	35281	0.000	14	4	16.000		0.000	1.000	0.000
		35282	2.000	14		18.000				
14	140030	35282	0.000	14	4	18.000		0.000	1.000	0.000
		4226	2.000	14		20.000				
14	140031	4237	0.000	14	4	0.000		0.000	1.000	0.000
		35283	2.000	14		2.000				
14	140032	35283	0.000	14	4	2.000		0.000	1.000	0.000
		35284	2.000	14		4.000				
14	140033	35284	0.000	14	4	4.000		0.000	1.000	0.000
		35285	2.000	14		6.000				
14	140034	35285	0.000	14	4	6.000		0.000	1.000	0.000
		35286	2.000	14		8.000				
14	140035	35286	0.000	14	4	8.000		0.000	1.000	0.000
		35287	2.000	14		10.000				
14	140036	35287	0.000	14	4	10.000		0.000	1.000	0.000
		35288	2.000	14		12.000				
14	140037	35288	0.000	14	4	12.000		0.000	1.000	0.000
		35289	2.000	14		14.000				
14	140038	35289	0.000	14	4	14.000		0.000	1.000	0.000
		35290	2.000	14		16.000				
14	140039	35290	0.000	14	4	16.000		0.000	1.000	0.000
		35291	2.000	14		18.000				
14	140040	35291	0.000	14	4	18.000		0.000	1.000	0.000
		4236	2.000	14		20.000				
21	210001	1107	0.000	21	0-0	0.000		-1.000	0.000	0.000
		33691	1.626	21		1.626				
21	210002	33691	0.000	21	0-0	1.626		-1.000	0.000	0.000
		33240	2.374	21		4.000				
21	210003	33240	0.000	21	0-0	4.000		-1.000	0.000	0.000
		33689	2.016	21		6.016				
21	210004	33689	0.000	21	0-0	6.016		-1.000	0.000	0.000
		1207	1.984	21		8.000				
21	210005	1807	0.000	21	0-0	0.000		-1.000	0.000	0.000
		33665	1.562	21		1.562				
21	210006	33665	0.000	21	0-0	1.562		-1.000	0.000	0.000
		1107	1.562	21		3.125				
21	210007	1207	0.000	21	0-0	0.000		-1.000	0.000	0.000
		33685	1.562	21		1.562				
21	210008	33685	0.000	21	0-0	1.562		-1.000	0.000	0.000
		1907	1.562	21		3.125				
22	220001	2107	0.000	22	0-0	0.000		-1.000	0.000	0.000
		35152	2.000	22		2.000				
22	220002	35152	0.000	22	0-0	2.000		-1.000	0.000	0.000
		35153	2.000	22		4.000				

SOFiSTiK AG - www.sofistik.de

Composite bridge 38+50+38, b=14.25m, 2x2HL1100R HISTAR460 , slab 0.30m C30/37

Beam Elements

Grp	Number	Node	x[m]	NoS	NoP	reference	Hinges	direction	local	y-axis
22	220003	35153	0.000	22	0-0	4.000		-1.000	0.000	0.000
		35154	2.000	22		6.000				
22	220004	35154	0.000	22	0-0	6.000		-1.000	0.000	0.000
		2207	2.000	22		8.000				
22	220005	2807	0.000	22	0-0	0.000		-1.000	0.000	0.000
		35198	1.562	22		1.562				
22	220006	35198	0.000	22	0-0	1.562		-1.000	0.000	0.000
		2107	1.562	22		3.125				
22	220007	2207	0.000	22	0-0	0.000		-1.000	0.000	0.000
		35200	1.562	22		1.562				
22	220008	35200	0.000	22	0-0	1.562		-1.000	0.000	0.000
		2907	1.562	22		3.125				
23	230001	3107	0.000	23	0-0	0.000		-1.000	0.000	0.000
		35206	2.000	23		2.000				
23	230002	35206	0.000	23	0-0	2.000		-1.000	0.000	0.000
		35207	2.000	23		4.000				
23	230003	35207	0.000	23	0-0	4.000		-1.000	0.000	0.000
		35208	2.000	23		6.000				
23	230004	35208	0.000	23	0-0	6.000		-1.000	0.000	0.000
		3207	2.000	23		8.000				
23	230005	3807	0.000	23	0-0	0.000		-1.000	0.000	0.000
		35252	1.562	23		1.562				
23	230006	35252	0.000	23	0-0	1.562		-1.000	0.000	0.000
		3107	1.562	23		3.125				
23	230007	3207	0.000	23	0-0	0.000		-1.000	0.000	0.000
		35254	1.562	23		1.562				
23	230008	35254	0.000	23	0-0	1.562		-1.000	0.000	0.000
		3907	1.562	23		3.125				
24	240001	4107	0.000	24	0-0	0.000		-1.000	0.000	0.000
		34959	1.626	24		1.626				
24	240002	34959	0.000	24	0-0	1.626		-1.000	0.000	0.000
		33433	2.374	24		4.000				
24	240003	33433	0.000	24	0-0	4.000		-1.000	0.000	0.000
		34957	2.016	24		6.016				
24	240004	34957	0.000	24	0-0	6.016		-1.000	0.000	0.000
		4207	1.984	24		8.000				
24	240005	4807	0.000	24	0-0	0.000		-1.000	0.000	0.000
		34933	1.562	24		1.562				
24	240006	34933	0.000	24	0-0	1.562		-1.000	0.000	0.000
		4107	1.562	24		3.125				
24	240007	4207	0.000	24	0-0	0.000		-1.000	0.000	0.000
		34953	1.562	24		1.562				
24	240008	34953	0.000	24	0-0	1.562		-1.000	0.000	0.000
		4907	1.562	24		3.125				
32	320001	2107	0.000	30		0.000		0.000	-1.000	0.000
		35148	1.690	30		1.690				
32	320002	35148	0.000	30		1.690		0.000	-1.000	0.000
		35149	1.690	30		3.380				
32	320003	35149	0.000	30		3.380		0.000	-1.000	0.000
		35150	1.690	30		5.070				
32	320004	35150	0.000	30		5.070		0.000	-1.000	0.000
		35151	1.690	30		6.760				
32	320005	35151	0.000	30		6.760		0.000	-1.000	0.000
		2108	1.690	30		8.450				
32	320006	2108	0.000	32	0-0	0.000		-1.000	0.000	0.000
		35155	2.000	32		2.000				
32	320007	35155	0.000	32	0-0	2.000		-1.000	0.000	0.000
		35156	2.000	32		4.000				
32	320008	35156	0.000	32	0-0	4.000		-1.000	0.000	0.000
		35157	2.000	32		6.000				
32	320009	35157	0.000	32	0-0	6.000		-1.000	0.000	0.000
		2208	2.000	32		8.000				
32	320010	2207	0.000	30		0.000		0.000	-1.000	0.000
		35176	1.690	30		1.690				
32	320011	35176	0.000	30		1.690		0.000	-1.000	0.000

SOFiSTiK AG - www.sofistik.de

Composite bridge 38+50+38, b=14.25m, 2x2HL1100R HISTAR460 , slab 0.30m C30/37

Beam Elements

Grp	Number	Node	x[m]	NoS	NoP	reference	Hinges	direction local		y-axis
32	320011	35177	1.690	30		3.380				
32	320012	35177	0.000	30		3.380		0.000	-1.000	0.000
		35178	1.690	30		5.070				
32	320013	35178	0.000	30		5.070		0.000	-1.000	0.000
		35179	1.690	30		6.760				
32	320014	35179	0.000	30		6.760		0.000	-1.000	0.000
		2208	1.690	30		8.450				
32	320015	2808	0.000	32	0-0	0.000		-1.000	0.000	0.000
		35199	1.562	32		1.562				
32	320016	35199	0.000	32	0-0	1.562		-1.000	0.000	0.000
		2108	1.562	32		3.125				
32	320017	2208	0.000	32	0-0	0.000		-1.000	0.000	0.000
		35201	1.562	32		1.562				
32	320018	35201	0.000	32	0-0	1.562		-1.000	0.000	0.000
		2908	1.562	32		3.125				
33	330001	3107	0.000	30		0.000		0.000	-1.000	0.000
		35202	1.690	30		1.690				
33	330002	35202	0.000	30		1.690		0.000	-1.000	0.000
		35203	1.690	30		3.380				
33	330003	35203	0.000	30		3.380		0.000	-1.000	0.000
		35204	1.690	30		5.070				
33	330004	35204	0.000	30		5.070		0.000	-1.000	0.000
		35205	1.690	30		6.760				
33	330005	35205	0.000	30		6.760		0.000	-1.000	0.000
		3108	1.690	30		8.450				
33	330006	3108	0.000	33	0-0	0.000		-1.000	0.000	0.000
		35209	2.000	33		2.000				
33	330007	35209	0.000	33	0-0	2.000		-1.000	0.000	0.000
		35210	2.000	33		4.000				
33	330008	35210	0.000	33	0-0	4.000		-1.000	0.000	0.000
		35211	2.000	33		6.000				
33	330009	35211	0.000	33	0-0	6.000		-1.000	0.000	0.000
		3208	2.000	33		8.000				
33	330010	3207	0.000	30		0.000		0.000	-1.000	0.000
		35230	1.690	30		1.690				
33	330011	35230	0.000	30		1.690		0.000	-1.000	0.000
		35231	1.690	30		3.380				
33	330012	35231	0.000	30		3.380		0.000	-1.000	0.000
		35232	1.690	30		5.070				
33	330013	35232	0.000	30		5.070		0.000	-1.000	0.000
		35233	1.690	30		6.760				
33	330014	35233	0.000	30		6.760		0.000	-1.000	0.000
		3208	1.690	30		8.450				
33	330015	3808	0.000	33	0-0	0.000		-1.000	0.000	0.000
		35253	1.562	33		1.562				
33	330016	35253	0.000	33	0-0	1.562		-1.000	0.000	0.000
		3108	1.562	33		3.125				
33	330017	3208	0.000	33	0-0	0.000		-1.000	0.000	0.000
		35255	1.562	33		1.562				
33	330018	35255	0.000	33	0-0	1.562		-1.000	0.000	0.000
		3908	1.562	33		3.125				
41	410001	1110	0.000	41	0-0	0.000		-1.000	0.000	0.000
		33848	0.333	41		0.333				
41	410002	33848	0.000	41	0-0	0.333		-1.000	0.000	0.000
		33235	0.333	41		0.667				
41	410003	33235	0.000	41	0-0	0.667		-1.000	0.000	0.000
		33743	0.420	41		1.087				
41	410004	33743	0.000	41	0-0	1.087		-1.000	0.000	0.000
		33236	0.420	41		1.507				
41	410005	33236	0.000	41	0-0	1.507		-1.000	0.000	0.000
		33800	0.614	41		2.121				
41	410006	33800	0.000	41	0-0	2.121		-1.000	0.000	0.000
		33237	0.614	41		2.735				
41	410007	33237	0.000	41	0-0	2.735		-1.000	0.000	0.000
		33751	0.925	41		3.660				

SOFiSTiK AG - www.sofistik.de

Composite bridge 38+50+38, b=14.25m, 2x2HL1100R HISTAR460 , slab 0.30m C30/37

Beam Elements

Grp	Number	Node	x[m]	NoS	NoP	reference	Hinges	direction	local	y-axis
41	410008	33751	0.000	41	0-0	3.660		-1.000	0.000	0.000
		33238	0.925	41		4.586				
41	410009	33238	0.000	41	0-0	4.586		-1.000	0.000	0.000
		33754	1.011	41		5.596				
41	410010	33754	0.000	41	0-0	5.596		-1.000	0.000	0.000
		33239	1.011	41		6.607				
41	410011	33239	0.000	41	0-0	6.607		-1.000	0.000	0.000
		33765	0.697	41		7.303				
41	410012	33765	0.000	41	0-0	7.303		-1.000	0.000	0.000
		1210	0.697	41		8.000				
42	420001	2110	0.000	42	0-0	0.000		-1.000	0.000	0.000
		33758	0.334	42		0.334				
42	420002	33758	0.000	42	0-0	0.334		-1.000	0.000	0.000
		33295	0.334	42		0.667				
42	420003	33295	0.000	42	0-0	0.667		-1.000	0.000	0.000
		33900	0.292	42		0.959				
42	420004	33900	0.000	42	0-0	0.959		-1.000	0.000	0.000
		33296	0.549	42		1.508				
42	420005	33296	0.000	42	0-0	1.508		-1.000	0.000	0.000
		33905	0.687	42		2.195				
42	420006	33905	0.000	42	0-0	2.195		-1.000	0.000	0.000
		33297	0.546	42		2.740				
42	420007	33297	0.000	42	0-0	2.740		-1.000	0.000	0.000
		33913	0.590	42		3.330				
42	420008	33913	0.000	42	0-0	3.330		-1.000	0.000	0.000
		33298	1.269	42		4.599				
42	420009	33298	0.000	42	0-0	4.599		-1.000	0.000	0.000
		33908	1.082	42		5.681				
42	420010	33908	0.000	42	0-0	5.681		-1.000	0.000	0.000
		33299	0.932	42		6.614				
42	420011	33299	0.000	42	0-0	6.614		-1.000	0.000	0.000
		33910	0.897	42		7.511				
42	420012	33910	0.000	42	0-0	7.511		-1.000	0.000	0.000
		2210	0.489	42		8.000				
43	430001	3110	0.000	43	0-0	0.000		-1.000	0.000	0.000
		34254	0.410	43		0.410				
43	430002	34254	0.000	43	0-0	0.410		-1.000	0.000	0.000
		33361	0.410	43		0.821				
43	430003	33361	0.000	43	0-0	0.821		-1.000	0.000	0.000
		34273	0.552	43		1.373				
43	430004	34273	0.000	43	0-0	1.373		-1.000	0.000	0.000
		33362	0.552	43		1.926				
43	430005	33362	0.000	43	0-0	1.926		-1.000	0.000	0.000
		34286	0.905	43		2.830				
43	430006	34286	0.000	43	0-0	2.830		-1.000	0.000	0.000
		33363	0.905	43		3.735				
43	430007	33363	0.000	43	0-0	3.735		-1.000	0.000	0.000
		34159	1.228	43		4.963				
43	430008	34159	0.000	43	0-0	4.963		-1.000	0.000	0.000
		33364	1.228	43		6.191				
43	430009	33364	0.000	43	0-0	6.191		-1.000	0.000	0.000
		34203	0.904	43		7.096				
43	430010	34203	0.000	43	0-0	7.096		-1.000	0.000	0.000
		3210	0.904	43		8.000				
44	440001	4110	0.000	44	0-0	0.000		-1.000	0.000	0.000
		34634	0.328	44		0.328				
44	440002	34634	0.000	44	0-0	0.328		-1.000	0.000	0.000
		33428	0.328	44		0.656				
44	440003	33428	0.000	44	0-0	0.656		-1.000	0.000	0.000
		34702	0.306	44		0.962				
44	440004	34702	0.000	44	0-0	0.962		-1.000	0.000	0.000
		33429	0.512	44		1.474				
44	440005	33429	0.000	44	0-0	1.474		-1.000	0.000	0.000
		34646	0.596	44		2.071				
44	440006	34646	0.000	44	0-0	2.071		-1.000	0.000	0.000

SOFiSTiK AG - www.sofistik.de

Composite bridge 38+50+38, b=14.25m, 2x2HL1100R HISTAR460 , slab 0.30m C30/37

Beam Elements

Grp	Number	Node	x[m]	NoS	NoP	reference	Hinges	direction	local	y-axis
44	440006	33430	0.596	44		2.667				
44	440007	33430	0.000	44	0-0	2.667		-1.000	0.000	0.000
		34559	0.897	44		3.564				
44	440008	34559	0.000	44	0-0	3.564		-1.000	0.000	0.000
		33431	0.897	44		4.461				
44	440009	33431	0.000	44	0-0	4.461		-1.000	0.000	0.000
		34705	1.271	44		5.732				
44	440010	34705	0.000	44	0-0	5.732		-1.000	0.000	0.000
		33432	0.822	44		6.554				
44	440011	33432	0.000	44	0-0	6.554		-1.000	0.000	0.000
		34580	0.723	44		7.277				
44	440012	34580	0.000	44	0-0	7.277		-1.000	0.000	0.000
		4210	0.723	44		8.000				
51	510001	1112	0.000	151	0-0	9.500		0.000	1.000	0.000
		33852	2.375	151		11.875				
51	510002	33852	0.000	151	0-0	11.875		0.000	1.000	0.000
		33216	2.375	151		14.250				
51	510003	33216	0.000	151	0-0	14.250		0.000	1.000	0.000
		33826	2.375	151		16.625				
51	510004	33826	0.000	151	0-0	16.625		0.000	1.000	0.000
		1116	2.375	151		19.000				
51	510005	1116	0.000	151	0-0	19.000		0.000	1.000	0.000
		33823	1.625	151		20.625				
51	510006	33823	0.000	151	0-0	20.625		0.000	1.000	0.000
		33217	1.625	151		22.250				
51	510007	33217	0.000	151	0-0	22.250		0.000	1.000	0.000
		33916	1.642	151		23.892				
51	510008	33916	0.000	151	0-0	23.892		0.000	1.000	0.000
		1113	1.608	151		25.500				
51	510009	1113	0.000	151	0-0	25.500		0.000	1.000	0.000
		33876	2.500	151		28.000				
51	510010	33876	0.000	151	0-0	28.000		0.000	1.000	0.000
		21113	2.500	151		30.500				
51	510011	1212	0.000	151	0-0	9.500		0.000	1.000	0.000
		33872	2.000	151		11.500				
51	510012	33872	0.000	151	0-0	11.500		0.000	1.000	0.000
		33255	2.000	151		13.500				
51	510013	33255	0.000	151	0-0	13.500		0.000	1.000	0.000
		33864	2.000	151		15.500				
51	510014	33864	0.000	151	0-0	15.500		0.000	1.000	0.000
		33256	2.000	151		17.500				
51	510015	33256	0.000	151	0-0	17.500		0.000	1.000	0.000
		33818	2.000	151		19.500				
51	510016	33818	0.000	151	0-0	19.500		0.000	1.000	0.000
		33257	2.000	151		21.500				
51	510017	33257	0.000	151	0-0	21.500		0.000	1.000	0.000
		33922	2.172	151		23.672				
51	510018	33922	0.000	151	0-0	23.672		0.000	1.000	0.000
		1213	1.828	151		25.500				
51	510019	1213	0.000	151	0-0	25.500		0.000	1.000	0.000
		33918	2.843	151		28.343				
51	510020	33918	0.000	151	0-0	28.343		0.000	1.000	0.000
		21213	2.157	151		30.500				
51	510021	21112	0.000	151	0-0	5.700		0.000	1.000	0.000
		33828	1.900	151		7.600				
51	510022	33828	0.000	151	0-0	7.600		0.000	1.000	0.000
		1112	1.900	151		9.500				
51	510023	21212	0.000	151	0-0	5.700		0.000	1.000	0.000
		33778	1.900	151		7.600				
51	510024	33778	0.000	151	0-0	7.600		0.000	1.000	0.000
		1212	1.900	151		9.500				
52	520001	2112	0.000	251	0-0	50.500		0.000	1.000	0.000
		34317	1.783	251		52.283				
52	520002	34317	0.000	251	0-0	52.283		0.000	1.000	0.000
		33226	2.383	251		54.667				

SOFiSTiK AG - www.sofistik.de

Composite bridge 38+50+38, b=14.25m, 2x2HL1100R HISTAR460 , slab 0.30m C30/37

Beam Elements

Grp	Number	Node	x[m]	NoS	NoP	reference	Hinges	direction	local	y-axis
52	520003	33226	0.000	251	0-0	54.667		0.000	1.000	0.000
		34322	2.571	251		57.238				
52	520004	34322	0.000	251	0-0	57.238		0.000	1.000	0.000
		33227	1.596	251		58.833				
52	520005	33227	0.000	251	0-0	58.833		0.000	1.000	0.000
		34312	1.883	251		60.716				
52	520006	34312	0.000	251	0-0	60.716		0.000	1.000	0.000
		2116	2.284	251		63.000				
52	520007	2116	0.000	251	0-0	63.000		0.000	1.000	0.000
		34124	2.083	251		65.083				
52	520008	34124	0.000	251	0-0	65.083		0.000	1.000	0.000
		33228	2.083	251		67.167				
52	520009	33228	0.000	251	0-0	67.167		0.000	1.000	0.000
		34184	2.083	251		69.250				
52	520010	34184	0.000	251	0-0	69.250		0.000	1.000	0.000
		33229	2.083	251		71.333				
52	520011	33229	0.000	251	0-0	71.333		0.000	1.000	0.000
		34222	2.083	251		73.417				
52	520012	34222	0.000	251	0-0	73.417		0.000	1.000	0.000
		2113	2.083	251		75.500				
52	520013	2113	0.000	251	0-0	75.500		0.000	1.000	0.000
		34217	2.500	251		78.000				
52	520014	34217	0.000	251	0-0	78.000		0.000	1.000	0.000
		22113	2.500	251		80.500				
52	520015	2212	0.000	251	0-0	50.500		0.000	1.000	0.000
		34315	1.658	251		52.158				
52	520016	34315	0.000	251	0-0	52.158		0.000	1.000	0.000
		33318	2.509	251		54.667				
52	520017	33318	0.000	251	0-0	54.667		0.000	1.000	0.000
		34320	2.554	251		57.220				
52	520018	34320	0.000	251	0-0	57.220		0.000	1.000	0.000
		33319	1.613	251		58.833				
52	520019	33319	0.000	251	0-0	58.833		0.000	1.000	0.000
		34324	1.892	251		60.725				
52	520020	34324	0.000	251	0-0	60.725		0.000	1.000	0.000
		33320	2.275	251		63.000				
52	520021	33320	0.000	251	0-0	63.000		0.000	1.000	0.000
		34128	2.083	251		65.083				
52	520022	34128	0.000	251	0-0	65.083		0.000	1.000	0.000
		33321	2.083	251		67.167				
52	520023	33321	0.000	251	0-0	67.167		0.000	1.000	0.000
		34176	2.083	251		69.250				
52	520024	34176	0.000	251	0-0	69.250		0.000	1.000	0.000
		33322	2.083	251		71.333				
52	520025	33322	0.000	251	0-0	71.333		0.000	1.000	0.000
		34250	2.083	251		73.417				
52	520026	34250	0.000	251	0-0	73.417		0.000	1.000	0.000
		2213	2.083	251		75.500				
52	520027	2213	0.000	251	0-0	75.500		0.000	1.000	0.000
		34300	2.491	251		77.991				
52	520028	34300	0.000	251	0-0	77.991		0.000	1.000	0.000
		22213	2.509	251		80.500				
52	520029	22112	0.000	251	0-0	45.500		0.000	1.000	0.000
		34226	2.500	251		48.000				
52	520030	34226	0.000	251	0-0	48.000		0.000	1.000	0.000
		2112	2.500	251		50.500				
52	520031	22212	0.000	251	0-0	45.500		0.000	1.000	0.000
		34164	2.500	251		48.000				
52	520032	34164	0.000	251	0-0	48.000		0.000	1.000	0.000
		2212	2.500	251		50.500				
53	530001	3112	0.000	351	0-0	100.500		0.000	1.000	0.000
		34657	1.625	351		102.125				
53	530002	34657	0.000	351	0-0	102.125		0.000	1.000	0.000
		33232	1.625	351		103.750				
53	530003	33232	0.000	351	0-0	103.750		0.000	1.000	0.000

SOFiSTiK AG - www.sofistik.de

Composite bridge 38+50+38, b=14.25m, 2x2HL1100R HISTAR460 , slab 0.30m C30/37

Beam Elements

Grp	Number	Node	x[m]	NoS	NoP	reference	Hinges	direction	local	y-axis
53	530003	34608	1.625	351		105.375				
53	530004	34608	0.000	351	0-0	105.375		0.000	1.000	0.000
		3116	1.625	351		107.000				
53	530005	3116	0.000	351	0-0	107.000		0.000	1.000	0.000
		34599	2.375	351		109.375				
53	530006	34599	0.000	351	0-0	109.375		0.000	1.000	0.000
		33233	2.375	351		111.750				
53	530007	33233	0.000	351	0-0	111.750		0.000	1.000	0.000
		34655	2.375	351		114.125				
53	530008	34655	0.000	351	0-0	114.125		0.000	1.000	0.000
		3113	2.375	351		116.500				
53	530009	3113	0.000	351	0-0	116.500		0.000	1.000	0.000
		34672	1.900	351		118.400				
53	530010	34672	0.000	351	0-0	118.400		0.000	1.000	0.000
		23113	1.900	351		120.300				
53	530011	3212	0.000	351	0-0	100.500		0.000	1.000	0.000
		34625	2.000	351		102.500				
53	530012	34625	0.000	351	0-0	102.500		0.000	1.000	0.000
		33383	2.000	351		104.500				
53	530013	33383	0.000	351	0-0	104.500		0.000	1.000	0.000
		34569	2.000	351		106.500				
53	530014	34569	0.000	351	0-0	106.500		0.000	1.000	0.000
		33384	2.000	351		108.500				
53	530015	33384	0.000	351	0-0	108.500		0.000	1.000	0.000
		34571	2.000	351		110.500				
53	530016	34571	0.000	351	0-0	110.500		0.000	1.000	0.000
		33385	2.000	351		112.500				
53	530017	33385	0.000	351	0-0	112.500		0.000	1.000	0.000
		34682	2.000	351		114.500				
53	530018	34682	0.000	351	0-0	114.500		0.000	1.000	0.000
		3213	2.000	351		116.500				
53	530019	3213	0.000	351	0-0	116.500		0.000	1.000	0.000
		34556	1.900	351		118.400				
53	530020	34556	0.000	351	0-0	118.400		0.000	1.000	0.000
		23213	1.900	351		120.300				
53	530021	23112	0.000	351	0-0	95.500		0.000	1.000	0.000
		34639	2.500	351		98.000				
53	530022	34639	0.000	351	0-0	98.000		0.000	1.000	0.000
		3112	2.500	351		100.500				
53	530023	23212	0.000	351	0-0	95.500		0.000	1.000	0.000
		34664	2.500	351		98.000				
53	530024	34664	0.000	351	0-0	98.000		0.000	1.000	0.000
		3212	2.500	351		100.500				
61	610001	1110	0.000	153	0-0	0.000		0.000	1.000	0.000
		33850	0.210	153		0.210				
61	610002	33850	0.000	153	0-0	0.210		0.000	1.000	0.000
		33215	0.210	153		0.420				
61	610003	33215	0.000	153	0-0	0.420		0.000	1.000	0.000
		33934	0.176	153		0.596				
61	610004	33934	0.000	153	0-0	0.596		0.000	1.000	0.000
		1115	0.104	153		0.700				
61	610005	1115	0.000	153	0-0	0.700		0.000	1.000	0.000
		33930	0.087	153		0.787				
61	610006	33930	0.000	153	0-0	0.787		0.000	1.000	0.000
		1111	0.113	153		0.900				
61	610007	1210	0.000	153	0-0	0.000		0.000	1.000	0.000
		33763	0.450	153		0.450				
61	610008	33763	0.000	153	0-0	0.450		0.000	1.000	0.000
		1211	0.450	153		0.900				
62	620001	1114	0.000	153	0-0	37.100		0.000	1.000	0.000
		33888	0.100	153		37.200				
62	620002	33888	0.000	153	0-0	37.200		0.000	1.000	0.000
		1117	0.100	153		37.300				
62	620003	1117	0.000	153	0-0	37.300		0.000	1.000	0.000
		33759	0.350	153		37.650				

SOFiSTiK AG - www.sofistik.de

Composite bridge 38+50+38, b=14.25m, 2x2HL1100R HISTAR460 , slab 0.30m C30/37

Beam Elements

Grp	Number	Node	x[m]	NoS	NoP	reference	Hinges	direction	local	y-axis
62	620004	33759	0.000	153	0-0	37.650		0.000	1.000	0.000
		2110	0.350	153		38.000				
62	620005	2110	0.000	153	0-0	38.000		0.000	1.000	0.000
		34306	0.350	253i		38.350				
62	620006	34306	0.000	153i	0-0	38.350		0.000	1.000	0.000
		2115	0.350	253i		38.700				
62	620007	2115	0.000	153i	0-0	38.700		0.000	1.000	0.000
		34309	0.077	253i		38.777				
62	620008	34309	0.000	153i	0-0	38.777		0.000	1.000	0.000
		2111	0.123	253		38.900				
62	620009	1214	0.000	153	0-0	37.100		0.000	1.000	0.000
		33911	0.489	153		37.589				
62	620010	33911	0.000	153	0-0	37.589		0.000	1.000	0.000
		2210	0.411	153		38.000				
62	620011	2210	0.000	153	0-0	38.000		0.000	1.000	0.000
		34170	0.450	253i		38.450				
62	620012	34170	0.000	153i	0-0	38.450		0.000	1.000	0.000
		2211	0.450	253		38.900				
63	630001	2114	0.000	253	0-0	87.100		0.000	1.000	0.000
		34304	0.096	253		87.196				
63	630002	34304	0.000	253	0-0	87.196		0.000	1.000	0.000
		2117	0.104	253		87.300				
63	630003	2117	0.000	253	0-0	87.300		0.000	1.000	0.000
		34211	0.135	253		87.435				
63	630004	34211	0.000	253	0-0	87.435		0.000	1.000	0.000
		33230	0.135	253		87.569				
63	630005	33230	0.000	253	0-0	87.569		0.000	1.000	0.000
		34255	0.215	253		87.785				
63	630006	34255	0.000	253	0-0	87.785		0.000	1.000	0.000
		3110	0.215	253		88.000				
63	630007	3110	0.000	253	0-0	88.000		0.000	1.000	0.000
		34622	0.215	353i		88.215				
63	630008	34622	0.000	253i	0-0	88.215		0.000	1.000	0.000
		33231	0.215	353i		88.431				
63	630009	33231	0.000	253i	0-0	88.431		0.000	1.000	0.000
		34717	0.148	353i		88.579				
63	630010	34717	0.000	253i	0-0	88.579		0.000	1.000	0.000
		3115	0.121	353i		88.700				
63	630011	3115	0.000	253i	0-0	88.700		0.000	1.000	0.000
		34680	0.100	353i		88.800				
63	630012	34680	0.000	253i	0-0	88.800		0.000	1.000	0.000
		3111	0.100	353		88.900				
63	630013	2214	0.000	253	0-0	87.100		0.000	1.000	0.000
		34205	0.450	253		87.550				
63	630014	34205	0.000	253	0-0	87.550		0.000	1.000	0.000
		3210	0.450	253		88.000				
63	630015	3210	0.000	253	0-0	88.000		0.000	1.000	0.000
		34585	0.450	353i		88.450				
63	630016	34585	0.000	253i	0-0	88.450		0.000	1.000	0.000
		3211	0.450	353		88.900				
64	640001	3114	0.000	353	0-0	125.100		0.000	1.000	0.000
		34707	0.095	353		125.195				
64	640002	34707	0.000	353	0-0	125.195		0.000	1.000	0.000
		3117	0.105	353		125.300				
64	640003	3117	0.000	353	0-0	125.300		0.000	1.000	0.000
		34611	0.140	353		125.440				
64	640004	34611	0.000	353	0-0	125.440		0.000	1.000	0.000
		33234	0.140	353		125.580				
64	640005	33234	0.000	353	0-0	125.580		0.000	1.000	0.000
		34635	0.210	353		125.790				
64	640006	34635	0.000	353	0-0	125.790		0.000	1.000	0.000
		4110	0.210	353		126.000				
64	640007	3214	0.000	353	0-0	125.100		0.000	1.000	0.000
		34583	0.450	353		125.550				
64	640008	34583	0.000	353	0-0	125.550		0.000	1.000	0.000

SOFiSTiK AG - www.sofistik.de

Composite bridge 38+50+38, b=14.25m, 2x2HL1100R HISTAR460 , slab 0.30m C30/37

Beam Elements

Grp	Number	Node	x[m]	NoS	NoP	reference	Hinges	direction	local	y-axis
64	640008	4210	0.450	353		126.000				
151:	1	1111	0.000	151	0-0	0.900		0.000	1.000	0.000
		33892	0.162	151		1.062				
151:	2	33892	0.000	151	0-0	1.062		0.000	1.000	0.000
		33242	0.162	151		1.224				
151:	3	33242	0.000	151	0-0	1.224		0.000	1.000	0.000
		33784	0.255	151		1.479				
151:	4	33784	0.000	151	0-0	1.479		0.000	1.000	0.000
		33243	0.255	151		1.734				
151:	5	33243	0.000	151	0-0	1.734		0.000	1.000	0.000
		33804	0.401	151		2.135				
151:	6	33804	0.000	151	0-0	2.135		0.000	1.000	0.000
		33244	0.401	151		2.536				
151:	7	33244	0.000	151	0-0	2.536		0.000	1.000	0.000
		33932	0.585	151		3.121				
151:	8	33932	0.000	151	0-0	3.121		0.000	1.000	0.000
		33245	0.733	151		3.854				
151:	9	33245	0.000	151	0-0	3.854		0.000	1.000	0.000
		33866	0.923	151		4.777				
151:	10	33866	0.000	151	0-0	4.777		0.000	1.000	0.000
		21112	0.923	151		5.700				
151:	11	1211	0.000	151	0-0	0.900		0.000	1.000	0.000
		33856	0.922	151		1.822				
151:	12	33856	0.000	151	0-0	1.822		0.000	1.000	0.000
		33254	0.922	151		2.743				
151:	13	33254	0.000	151	0-0	2.743		0.000	1.000	0.000
		33924	1.142	151		3.885				
151:	14	33924	0.000	151	0-0	3.885		0.000	1.000	0.000
		21212	1.815	151		5.700				
151:	15	21113	0.000	153	0-0	30.500		0.000	1.000	0.000
		33920	1.155	153		31.655				
151:	16	33920	0.000	153	0-0	31.655		0.000	1.000	0.000
		33460	1.294	153		32.949				
151:	17	33460	0.000	153	0-0	32.949		0.000	1.000	0.000
		33843	0.779	153		33.729				
151:	18	33843	0.000	153	0-0	33.729		0.000	1.000	0.000
		33461	0.779	153		34.508				
151:	19	33461	0.000	153	0-0	34.508		0.000	1.000	0.000
		33869	0.566	153		35.074				
151:	20	33869	0.000	153	0-0	35.074		0.000	1.000	0.000
		33462	0.566	153		35.640				
151:	21	33462	0.000	153	0-0	35.640		0.000	1.000	0.000
		33838	0.348	153		35.988				
151:	22	33838	0.000	153	0-0	35.988		0.000	1.000	0.000
		33463	0.348	153		36.336				
151:	23	33463	0.000	153	0-0	36.336		0.000	1.000	0.000
		33882	0.230	153		36.566				
151:	24	33882	0.000	153	0-0	36.566		0.000	1.000	0.000
		33464	0.230	153		36.796				
151:	25	33464	0.000	153	0-0	36.796		0.000	1.000	0.000
		33833	0.152	153		36.948				
151:	26	33833	0.000	153	0-0	36.948		0.000	1.000	0.000
		1114	0.152	153		37.100				
151:	27	21213	0.000	153	0-0	30.500		0.000	1.000	0.000
		33880	1.515	153		32.015				
151:	28	33880	0.000	153	0-0	32.015		0.000	1.000	0.000
		33465	1.515	153		33.531				
151:	29	33465	0.000	153	0-0	33.531		0.000	1.000	0.000
		33813	1.083	153		34.614				
151:	30	33813	0.000	153	0-0	34.614		0.000	1.000	0.000
		33466	1.084	153		35.698				
151:	31	33466	0.000	153	0-0	35.698		0.000	1.000	0.000
		33806	0.701	153		36.399				
151:	32	33806	0.000	153	0-0	36.399		0.000	1.000	0.000
		1214	0.701	153		37.100				

SOFiSTiK AG - www.sofistik.de

Composite bridge 38+50+38, b=14.25m, 2x2HL1100R HISTAR460 , slab 0.30m C30/37

Beam Elements

Grp	Number	Node	x[m]	NoS	NoP	reference	Hinges	direction	local	y-axis
152:	1	2111	0.000	253	0-0	38.900		0.000	1.000	0.000
		34132	0.152	253		39.052				
152:	2	34132	0.000	253	0-0	39.052		0.000	1.000	0.000
		33303	0.152	253		39.204				
152:	3	33303	0.000	253	0-0	39.204		0.000	1.000	0.000
		34138	0.230	253		39.434				
152:	4	34138	0.000	253	0-0	39.434		0.000	1.000	0.000
		33304	0.230	253		39.664				
152:	5	33304	0.000	253	0-0	39.664		0.000	1.000	0.000
		34168	0.348	253		40.012				
152:	6	34168	0.000	253	0-0	40.012		0.000	1.000	0.000
		33305	0.348	253		40.360				
152:	7	33305	0.000	253	0-0	40.360		0.000	1.000	0.000
		34291	0.566	253		40.926				
152:	8	34291	0.000	253	0-0	40.926		0.000	1.000	0.000
		33306	0.566	253		41.492				
152:	9	33306	0.000	253	0-0	41.492		0.000	1.000	0.000
		34190	0.779	253		42.271				
152:	10	34190	0.000	253	0-0	42.271		0.000	1.000	0.000
		33307	0.779	253		43.051				
152:	11	33307	0.000	253	0-0	43.051		0.000	1.000	0.000
		34237	1.225	253		44.275				
152:	12	34237	0.000	253	0-0	44.275		0.000	1.000	0.000
		22112	1.225	253		45.500	My			
152:	13	2211	0.000	253	0-0	38.900		0.000	1.000	0.000
		34239	1.188	253		40.088				
152:	14	34239	0.000	253	0-0	40.088		0.000	1.000	0.000
		33317	1.188	253		41.276				
152:	15	33317	0.000	253	0-0	41.276		0.000	1.000	0.000
		34283	2.112	253		43.388				
152:	16	34283	0.000	253	0-0	43.388		0.000	1.000	0.000
		22212	2.112	253		45.500	My			
152:	17	22113	0.000	253	0-0	80.500		0.000	1.000	0.000
		34302	1.191	253		81.691				
152:	18	34302	0.000	253	0-0	81.691		0.000	1.000	0.000
		33467	1.259	253		82.949				
152:	19	33467	0.000	253	0-0	82.949		0.000	1.000	0.000
		34207	0.779	253		83.729				
152:	20	34207	0.000	253	0-0	83.729		0.000	1.000	0.000
		33468	0.779	253		84.508				
152:	21	33468	0.000	253	0-0	84.508		0.000	1.000	0.000
		34248	0.566	253		85.074				
152:	22	34248	0.000	253	0-0	85.074		0.000	1.000	0.000
		33469	0.566	253		85.640				
152:	23	33469	0.000	253	0-0	85.640		0.000	1.000	0.000
		34243	0.348	253		85.988				
152:	24	34243	0.000	253	0-0	85.988		0.000	1.000	0.000
		33470	0.348	253		86.336				
152:	25	33470	0.000	253	0-0	86.336		0.000	1.000	0.000
		34262	0.230	253		86.566				
152:	26	34262	0.000	253	0-0	86.566		0.000	1.000	0.000
		33471	0.230	253		86.796				
152:	27	33471	0.000	253	0-0	86.796		0.000	1.000	0.000
		34257	0.152	253		86.948				
152:	28	34257	0.000	253	0-0	86.948		0.000	1.000	0.000
		2114	0.152	253		87.100				
152:	29	22213	0.000	253	0-0	80.500		0.000	1.000	0.000
		34295	1.588	253		82.088				
152:	30	34295	0.000	253	0-0	82.088		0.000	1.000	0.000
		33472	1.443	253		83.531				
152:	31	33472	0.000	253	0-0	83.531		0.000	1.000	0.000
		34230	1.084	253		84.614				
152:	32	34230	0.000	253	0-0	84.614		0.000	1.000	0.000
		33473	1.083	253		85.698				
152:	33	33473	0.000	253	0-0	85.698		0.000	1.000	0.000

SOFiSTiK AG - www.sofistik.de

Composite bridge 38+50+38, b=14.25m, 2x2HL1100R HISTAR460 , slab 0.30m C30/37

Beam Elements

Grp	Number	Node	x[m]	NoS	NoP	reference	Hinges	direction	local	y-axis
152:	33	34297	0.659	253		86.357				
152:	34	34297	0.000	253	0-0	86.357		0.000	1.000	0.000
		2214	0.743	253		87.100				
153:	1	3111	0.000	353	0-0	88.900		0.000	1.000	0.000
		34711	0.164	353		89.064				
153:	2	34711	0.000	353	0-0	89.064		0.000	1.000	0.000
		33368	0.141	353		89.204				
153:	3	33368	0.000	353	0-0	89.204		0.000	1.000	0.000
		34578	0.230	353		89.434				
153:	4	34578	0.000	353	0-0	89.434		0.000	1.000	0.000
		33369	0.230	353		89.664				
153:	5	33369	0.000	353	0-0	89.664		0.000	1.000	0.000
		34715	0.223	353		89.886				
153:	6	34715	0.000	353	0-0	89.886		0.000	1.000	0.000
		33370	0.473	353		90.360				
153:	7	33370	0.000	353	0-0	90.360		0.000	1.000	0.000
		34713	0.615	353		90.975				
153:	8	34713	0.000	353	0-0	90.975		0.000	1.000	0.000
		33371	0.517	353		91.492				
153:	9	33371	0.000	353	0-0	91.492		0.000	1.000	0.000
		34618	0.779	353		92.271				
153:	10	34618	0.000	353	0-0	92.271		0.000	1.000	0.000
		33372	0.779	353		93.051				
153:	11	33372	0.000	353	0-0	93.051		0.000	1.000	0.000
		34606	1.225	353		94.275				
153:	12	34606	0.000	353	0-0	94.275		0.000	1.000	0.000
		23112	1.225	353		95.500	My			
153:	13	3211	0.000	353	0-0	88.900		0.000	1.000	0.000
		34722	0.988	353		89.888				
153:	14	34722	0.000	353	0-0	89.888		0.000	1.000	0.000
		33382	1.388	353		91.276				
153:	15	33382	0.000	353	0-0	91.276		0.000	1.000	0.000
		34720	1.747	353		93.023				
153:	16	34720	0.000	353	0-0	93.023		0.000	1.000	0.000
		23212	2.477	353		95.500	My			
153:	17	23113	0.000	351	0-0	120.300		0.000	1.000	0.000
		34684	0.923	351		121.223				
153:	18	34684	0.000	351	0-0	121.223		0.000	1.000	0.000
		33474	0.923	351		122.146				
153:	19	33474	0.000	351	0-0	122.146		0.000	1.000	0.000
		34670	0.659	351		122.805				
153:	20	34670	0.000	351	0-0	122.805		0.000	1.000	0.000
		33475	0.659	351		123.464				
153:	21	33475	0.000	351	0-0	123.464		0.000	1.000	0.000
		34709	0.468	351		123.932				
153:	22	34709	0.000	351	0-0	123.932		0.000	1.000	0.000
		33476	0.334	351		124.266				
153:	23	33476	0.000	351	0-0	124.266		0.000	1.000	0.000
		34689	0.255	351		124.521				
153:	24	34689	0.000	351	0-0	124.521		0.000	1.000	0.000
		33477	0.255	351		124.776				
153:	25	33477	0.000	351	0-0	124.776		0.000	1.000	0.000
		34594	0.162	351		124.938				
153:	26	34594	0.000	351	0-0	124.938		0.000	1.000	0.000
		3114	0.162	351		125.100				
153:	27	23213	0.000	351	0-0	120.300		0.000	1.000	0.000
		34550	1.478	351		121.778				
153:	28	34550	0.000	351	0-0	121.778		0.000	1.000	0.000
		33478	1.478	351		123.257				
153:	29	33478	0.000	351	0-0	123.257		0.000	1.000	0.000
		34687	0.922	351		124.178				
153:	30	34687	0.000	351	0-0	124.178		0.000	1.000	0.000
		3214	0.922	351		125.100				

SOFiSTiK AG - www.sofistik.de

Composite bridge 38+50+38, b=14.25m, 2x2HL1100R HISTAR460 , slab 0.30m C30/37

Spring Elements

Grp	Number	Node	Node DAMP:	dX[-] e-P[-]	dY[-] e-T[-]	dZ[-] e-M[-]	CP[kN/m] DP[kNsec/m]	CT[kN/m] DT[kNsec/m]	CM[kNm] DM[kNmsec]
71	710001	1109	1108	0.000	0.000	1.000	1.000E+06		
71	710002	1109	1108	0.000	1.000	0.000	1.000E+06		
71	710003	1209	1208	0.000	0.000	1.000	1.000E+06		
72	720001	2109	2108	0.000	0.000	1.000	1.000E+06		
72	720002	2109	2108	0.000	1.000	0.000	1.000E+06		
72	720003	2109	2108	1.000	0.000	0.000	1.000E+06		
72	720004	2209	2208	0.000	0.000	1.000	1.000E+06		
72	720005	2209	2208	1.000	0.000	0.000	1.000E+06		
73	730001	3109	3108	0.000	0.000	1.000	1.000E+06		
73	730002	3109	3108	0.000	1.000	0.000	1.000E+06		
73	730003	3209	3208	0.000	0.000	1.000	1.000E+06		
74	740001	4109	4108	0.000	0.000	1.000	1.000E+06		
74	740002	4109	4108	0.000	1.000	0.000	1.000E+06		
74	740003	4209	4208	0.000	0.000	1.000	1.000E+06		
91	910001	1111		0.000	1.000	0.000	1.000E+06		
91	910002	1114		0.000	1.000	0.000	1.000E+06		
91	910003	1211		0.000	1.000	0.000	1.000E+06		
91	910004	1214		0.000	1.000	0.000	1.000E+06		
91	910005	11111		0.000	0.000	1.000	1.000E+06		
91	910006	11111		0.000	1.000	0.000	1.000E+06		
91	910007	11111		1.000	0.000	0.000	1.000E+01		
91	910008	11114		0.000	0.000	1.000	1.000E+06		
91	910009	11114		0.000	1.000	0.000	1.000E+06		
91	910010	11114		1.000	0.000	0.000	1.000E+01		
91	910011	11211		0.000	0.000	1.000	1.000E+06		
91	910012	11211		0.000	1.000	0.000	1.000E+06		
91	910013	11211		1.000	0.000	0.000	1.000E+01		
91	910014	11214		0.000	0.000	1.000	1.000E+06		
91	910015	11214		0.000	1.000	0.000	1.000E+06		
91	910016	11214		1.000	0.000	0.000	1.000E+01		
92	920001	2111		0.000	1.000	0.000	1.000E+06		
92	920002	2114		0.000	1.000	0.000	1.000E+06		
92	920003	2211		0.000	1.000	0.000	1.000E+06		
92	920004	2214		0.000	1.000	0.000	1.000E+06		
92	920005	22111		0.000	0.000	1.000	1.000E+06		
92	920006	22111		0.000	1.000	0.000	1.000E+06		
92	920007	22111		1.000	0.000	0.000	1.000E+01		
92	920008	22114		0.000	0.000	1.000	1.000E+06		
92	920009	22114		0.000	1.000	0.000	1.000E+06		
92	920010	22114		1.000	0.000	0.000	1.000E+01		
92	920011	22211		0.000	0.000	1.000	1.000E+06		
92	920012	22211		0.000	1.000	0.000	1.000E+06		
92	920013	22211		1.000	0.000	0.000	1.000E+01		
92	920014	22214		0.000	0.000	1.000	1.000E+06		
92	920015	22214		0.000	1.000	0.000	1.000E+06		
92	920016	22214		1.000	0.000	0.000	1.000E+01		
93	930001	3111		0.000	1.000	0.000	1.000E+06		
93	930002	3114		0.000	1.000	0.000	1.000E+06		
93	930003	3211		0.000	1.000	0.000	1.000E+06		
93	930004	3214		0.000	1.000	0.000	1.000E+06		
93	930005	33111		0.000	0.000	1.000	1.000E+06		
93	930006	33111		0.000	1.000	0.000	1.000E+06		
93	930007	33111		1.000	0.000	0.000	1.000E+01		
93	930008	33114		0.000	0.000	1.000	1.000E+06		
93	930009	33114		0.000	1.000	0.000	1.000E+06		
93	930010	33114		1.000	0.000	0.000	1.000E+01		
93	930011	33211		0.000	0.000	1.000	1.000E+06		
93	930012	33211		0.000	1.000	0.000	1.000E+06		
93	930013	33211		1.000	0.000	0.000	1.000E+01		
93	930014	33214		0.000	0.000	1.000	1.000E+06		
93	930015	33214		0.000	1.000	0.000	1.000E+06		
93	930016	33214		1.000	0.000	0.000	1.000E+01		
111:	1	1126		0.000	0.000	1.000	1.200E+06		
111:	2	1136		0.000	0.000	1.000	1.200E+06		

SOFiSTiK AG - www.sofistik.de

Composite bridge 38+50+38, b=14.25m, 2x2HL1100R HISTAR460 , slab 0.30m C30/37

Spring Elements

Grp	Number	Node	Node DAMP:	dX[-] e-P[-]	dY[-] e-T[-]	dZ[-] e-M[-]	CP[kN/m] DP[kNsec/m]	CT[kN/m] DT[kNsec/m]	CM[kNm] DM[kNmsec]
111:	3	1226		0.000	0.000	1.000	1.200E+06		
111:	4	1236		0.000	0.000	1.000	1.200E+06		
112:	1	2126		0.000	0.000	1.000	1.200E+06		
112:	2	2136		0.000	0.000	1.000	1.200E+06		
112:	3	2226		0.000	0.000	1.000	1.200E+06		
112:	4	2236		0.000	0.000	1.000	1.200E+06		
113:	1	3126		0.000	0.000	1.000	1.200E+06		
113:	2	3136		0.000	0.000	1.000	1.200E+06		
113:	3	3226		0.000	0.000	1.000	1.200E+06		
113:	4	3236		0.000	0.000	1.000	1.200E+06		
114:	1	4126		0.000	0.000	1.000	1.200E+06		
114:	2	4136		0.000	0.000	1.000	1.200E+06		
114:	3	4226		0.000	0.000	1.000	1.200E+06		
114:	4	4236		0.000	0.000	1.000	1.200E+06		

All springs are defined with linear effects

Supporting Lines

from	to	inc	type	ref	CA/CB	Title/Direction
310001	---------					
						Total Length 8.000 [m]
						0.00 percent active
1107	33691	32584	--	S	0.00E+00	
33691	33240	-451	--	S	0.00E+00	
33240	33689	449	--	S	0.00E+00	
33689	1207	-32482	--	S	0.00E+00	
310002	---------					
						Total Length 3.125 [m]
						0.00 percent active
1807	33665	31858	--	S	0.00E+00	
33665	1107	-32558	--	S	0.00E+00	
310003	---------					
						Total Length 3.125 [m]
						0.00 percent active
1207	33685	32478	--	S	0.00E+00	
33685	1907	-31778	--	S	0.00E+00	
320001	---------					
						Total Length 8.000 [m]
						0.00 percent active
2107	35152	33045	--	S	0.00E+00	
35152	35153	1	--	S	0.00E+00	
35153	35154	1	--	S	0.00E+00	
35154	2207	-32947	--	S	0.00E+00	
320002	---------					
						Total Length 3.125 [m]
						0.00 percent active
2807	35198	32391	--	S	0.00E+00	
35198	2107	-33091	--	S	0.00E+00	
320003	---------					
						Total Length 3.125 [m]
						0.00 percent active
2207	35200	32993	--	S	0.00E+00	
35200	2907	-32293	--	S	0.00E+00	
330001	---------					
						Total Length 8.000 [m]
						0.00 percent active
3107	35206	32099	--	S	0.00E+00	
35206	35207	1	--	S	0.00E+00	
35207	35208	1	--	S	0.00E+00	
35208	3207	-32001	--	S	0.00E+00	
330002	---------					
						Total Length 3.125 [m]
						0.00 percent active
3807	35252	31445	--	S	0.00E+00	
35252	3107	-32145	--	S	0.00E+00	

SOFiSTiK AG - www.sofistik.de

Composite bridge 38+50+38, b=14.25m, 2x2HL1100R HISTAR460 , slab 0.30m C30/37

Supporting Lines

from	to	inc	type	ref	CA/CB	Title/Direction
330003	---------					
						Total Length 3.125 [m]
						0.00 percent active
3207	35254	32047	--	S	0.00E+00	
35254	3907	-31347	--	S	0.00E+00	
340001	---------					
						Total Length 8.000 [m]
						0.00 percent active
4107	34959	30852	--	S	0.00E+00	
34959	33433	-1526	--	S	0.00E+00	
33433	34957	1524	--	S	0.00E+00	
34957	4207	-30750	--	S	0.00E+00	
340002	---------					
						Total Length 3.125 [m]
						0.00 percent active
4807	34933	30126	--	S	0.00E+00	
34933	4107	-30826	--	S	0.00E+00	
340003	---------					
						Total Length 3.125 [m]
						0.00 percent active
4207	34953	30746	--	S	0.00E+00	
34953	4907	-30046	--	S	0.00E+00	

Summary of all beam elements

Groups

Grp	TotLength [m]	Max.Length [m]	TotWeight [t]	Surface [m2]
11	80.000	2.000	1035.958	
12	80.000	2.000	1035.958	
13	80.000	2.000	1035.958	
14	80.000	2.000	1035.958	
21	14.250	2.374	267.188	
22	14.250	2.000	267.188	
23	14.250	2.000	267.188	
24	14.250	2.374	267.188	
32	31.150	2.000	270.756	
33	31.150	2.000	270.756	
41	8.000	1.011	3.989	30.171
42	8.000	1.269	3.989	30.171
43	8.000	1.228	3.989	30.171
44	8.000	1.271	3.989	30.171
51	49.600	2.843	313.764	198.400
52	70.000	2.571	442.812	280.000
53	49.600	2.500	313.764	198.400
61	1.800	0.450	11.439	7.200
62	3.600	0.489	22.879	14.400
63	3.600	0.450	22.879	14.400
64	1.800	0.450	11.439	7.200
151	22.800	1.815	144.618	91.200
152	26.400	2.112	167.778	105.600
153	22.800	2.477	144.618	91.200
Sum	723.300		7366.040	1128.682

Summary of all planar elements

Groups

Grp	TotArea [m2]	TotVolume [m3]	TotWeight [t]	Material No.
31	190.238	237.690	594.225	50
34	190.238	237.690	594.225	50
81	541.500	162.450	0.000	32
82	712.500	213.750	0.000	32
83	541.500	162.450	0.000	32

SOFiSTiK AG - www.sofistik.de

Composite bridge 38+50+38, b=14.25m, 2x2HL1100R HISTAR460 , slab 0.30m C30/37

Groups

Grp	TotArea [m2]	TotVolume [m3]	TotWeight [t]	Material No.
Sum	2175.975	1014.030	1188.450	

SOFiSTiK AG - www.sofistik.de

Composite bridge 38+50+38, b=14.25m, 2x2HL1100R HISTAR460 , slab 0.30m C30/37
Dead and moving loads

Actions

type	part	sup	Title	γ-u	γ-f	γ-a	ψ-0	ψ-1	ψ-2
X		excl	singl load cases	1.00	0.00	1.00	1.00	1.00	1.00
G	G	perm	dead load	1.35	1.00	1.00	1.00	1.00	1.00
G_1	G	perm	gk	1.35	1.00	1.00	1.00	1.00	1.00
G_2	G	perm	gn	1.35	1.00	1.00	1.00	1.00	1.00
G_3	G	perm	soil horisontal	1.50	1.00	1.00	1.00	1.00	1.00
C	P	perm	C+S	1.35	1.00	1.00	1.00	1.00	1.00
C_1	P	perm	C+S	1.35	1.00	1.00	1.00	1.00	1.00
C_2	P	perm	C+S	1.35	0.00	1.00	1.00	1.00	1.00
F	Q	cond	settlements	1.20	0.00	1.00	1.00	1.00	1.00
F_1	Q	cond	settlements	1.20	0.00	1.00	1.00	1.00	1.00
L	Q	excl	live loading	1.50	0.00	1.00	0.75	0.75	0.20
L_1	Q	excl	TS from LM1 EN	1.50	0.00	1.00	0.75	0.75	0.20
Q	Q	cond	gr1a EN	1.50	0.00	1.00	0.75	0.75	0.20
Q_1	Q	cond	gr1a vertical EN	1.50	0.00	1.00	0.75	0.75	0.20
Q_2	Q	cond	B+A EN	1.50	0.00	1.00	0.75	0.75	0.20
Q_3	Q	cond	horis perp EN	1.50	0.00	1.00	0.75	0.75	0.20
T	Q	excl	temp	1.50	0.00	1.00	0.60	0.60	0.50
T_1	Q	excl	temp	1.50	0.00	1.00	0.60	0.60	0.50
			Reduction coefficient xsi		0.850				

Load Case 2 (G_1) deskowania

Factor forces and moments		1.000
Factor dead weight	DL-XX	0.000
Factor dead weight	DL-YY	0.000
Factor dead weight	DL-ZZ	0.000
unfavourable safety factor		1.350
favourable safety factor		1.000
Combination coefficient ψ-0		1.000 (rare)
Combination coefficient ψ-1'		1.000 (non frequent)
Combination coefficient ψ-1		1.000 (frequent)
Combination coefficient ψ-2		1.000 (permanent)

Loads acting on Beam-elements

Number	Type	a[m]	l[m]	Loadval	Loadval Dimens.	ya[m]	za[m]	ye[m]	ze[m]
510001	PG	0.000	2.375	3.58	[kN/m]				
510002	PG	0.000	2.375	3.58	[kN/m]				
510003	PG	0.000	2.375	3.58	[kN/m]				
510004	PG	0.000	2.375	3.58	[kN/m]				
510005	PG	0.000	1.625	3.58	[kN/m]				
510006	PG	0.000	1.625	3.58	[kN/m]				
510007	PG	0.000	1.642	3.58	[kN/m]				
510008	PG	0.000	1.608	3.58	[kN/m]				
510009	PG	0.000	2.500	3.58	[kN/m]				
510010	PG	0.000	2.500	3.58	[kN/m]				
510011	PG	0.000	2.000	3.58	[kN/m]				
510012	PG	0.000	2.000	3.58	[kN/m]				
510013	PG	0.000	2.000	3.58	[kN/m]				
510014	PG	0.000	2.000	3.58	[kN/m]				
510015	PG	0.000	2.000	3.58	[kN/m]				
510016	PG	0.000	2.000	3.58	[kN/m]				
510017	PG	0.000	2.172	3.58	[kN/m]				
510018	PG	0.000	1.828	3.58	[kN/m]				
510019	PG	0.000	2.843	3.58	[kN/m]				
510020	PG	0.000	2.157	3.58	[kN/m]				
510021	PG	0.000	1.900	3.58	[kN/m]				
510022	PG	0.000	1.900	3.58	[kN/m]				
510023	PG	0.000	1.900	3.58	[kN/m]				
510024	PG	0.000	1.900	3.58	[kN/m]				
520001	PG	0.000	1.783	3.58	[kN/m]				
520002	PG	0.000	2.383	3.58	[kN/m]				
520003	PG	0.000	2.571	3.58	[kN/m]				
520004	PG	0.000	1.596	3.58	[kN/m]				
520005	PG	0.000	1.883	3.58	[kN/m]				
520006	PG	0.000	2.284	3.58	[kN/m]				

SOFiSTiK AG - www.sofistik.de

Composite bridge 38+50+38, b=14.25m, 2x2HL1100R HISTAR460 , slab 0.30m C30/37
Dead and moving loads

Loads acting on Beam-elements

Number	Type	a[m]	l[m]	Loadval	Loadval	Dimens.	ya[m]	za[m]	ye[m]	ze[m]
520007	PG	0.000	2.083	3.58		[kN/m]				
520008	PG	0.000	2.083	3.58		[kN/m]				
520009	PG	0.000	2.083	3.58		[kN/m]				
520010	PG	0.000	2.083	3.58		[kN/m]				
520011	PG	0.000	2.083	3.58		[kN/m]				
520012	PG	0.000	2.083	3.58		[kN/m]				
520013	PG	0.000	2.500	3.58		[kN/m]				
520014	PG	0.000	2.500	3.58		[kN/m]				
520015	PG	0.000	1.658	3.58		[kN/m]				
520016	PG	0.000	2.509	3.58		[kN/m]				
520017	PG	0.000	2.554	3.58		[kN/m]				
520018	PG	0.000	1.613	3.58		[kN/m]				
520019	PG	0.000	1.892	3.58		[kN/m]				
520020	PG	0.000	2.275	3.58		[kN/m]				
520021	PG	0.000	2.083	3.58		[kN/m]				
520022	PG	0.000	2.083	3.58		[kN/m]				
520023	PG	0.000	2.083	3.58		[kN/m]				
520024	PG	0.000	2.083	3.58		[kN/m]				
520025	PG	0.000	2.083	3.58		[kN/m]				
520026	PG	0.000	2.083	3.58		[kN/m]				
520027	PG	0.000	2.491	3.58		[kN/m]				
520028	PG	0.000	2.509	3.58		[kN/m]				
520029	PG	0.000	2.500	3.58		[kN/m]				
520030	PG	0.000	2.500	3.58		[kN/m]				
520031	PG	0.000	2.500	3.58		[kN/m]				
520032	PG	0.000	2.500	3.58		[kN/m]				
530001	PG	0.000	1.625	3.58		[kN/m]				
530002	PG	0.000	1.625	3.58		[kN/m]				
530003	PG	0.000	1.625	3.58		[kN/m]				
530004	PG	0.000	1.625	3.58		[kN/m]				
530005	PG	0.000	2.375	3.58		[kN/m]				
530006	PG	0.000	2.375	3.58		[kN/m]				
530007	PG	0.000	2.375	3.58		[kN/m]				
530008	PG	0.000	2.375	3.58		[kN/m]				
530009	PG	0.000	1.900	3.58		[kN/m]				
530010	PG	0.000	1.900	3.58		[kN/m]				
530011	PG	0.000	2.000	3.58		[kN/m]				
530012	PG	0.000	2.000	3.58		[kN/m]				
530013	PG	0.000	2.000	3.58		[kN/m]				
530014	PG	0.000	2.000	3.58		[kN/m]				
530015	PG	0.000	2.000	3.58		[kN/m]				
530016	PG	0.000	2.000	3.58		[kN/m]				
530017	PG	0.000	2.000	3.58		[kN/m]				
530018	PG	0.000	2.000	3.58		[kN/m]				
530019	PG	0.000	1.900	3.58		[kN/m]				
530020	PG	0.000	1.900	3.58		[kN/m]				
530021	PG	0.000	2.500	3.58		[kN/m]				
530022	PG	0.000	2.500	3.58		[kN/m]				
530023	PG	0.000	2.500	3.58		[kN/m]				
530024	PG	0.000	2.500	3.58		[kN/m]				
1510001	PG	0.000	0.162	0.80		[kN/m]				
1510001	PG	0.000	0.162	3.58		[kN/m]				
1510002	PG	0.000	0.162	3.58		[kN/m]				
1510002	PG	0.000	0.162	0.80		[kN/m]				
1510003	PG	0.000	0.255	0.80		[kN/m]				
1510003	PG	0.000	0.255	3.58		[kN/m]				
1510004	PG	0.000	0.255	3.58		[kN/m]				
1510004	PG	0.000	0.255	0.80		[kN/m]				
1510005	PG	0.000	0.401	0.80		[kN/m]				
1510005	PG	0.000	0.401	3.58		[kN/m]				
1510006	PG	0.000	0.401	3.58		[kN/m]				
1510006	PG	0.000	0.401	0.80		[kN/m]				
1510007	PG	0.000	0.585	0.80		[kN/m]				
1510007	PG	0.000	0.585	3.58		[kN/m]				

SOFiSTiK AG - www.sofistik.de

Composite bridge 38+50+38, b=14.25m, 2x2HL1100R HISTAR460 , slab 0.30m C30/37
Dead and moving loads

Loads acting on Beam-elements

Number	Type	a[m]	l[m]	Loadval	Loadval	Dimens.	ya[m]	za[m]	ye[m]	ze[m]
1510008	PG	0.000	0.733	3.58		[kN/m]				
1510008	PG	0.000	0.733	0.80		[kN/m]				
1510009	PG	0.000	0.923	0.80		[kN/m]				
1510009	PG	0.000	0.923	3.58		[kN/m]				
1510010	PG	0.000	0.923	3.58		[kN/m]				
1510010	PG	0.000	0.923	0.80		[kN/m]				
1510011	PG	0.000	0.922	0.80		[kN/m]				
1510011	PG	0.000	0.922	3.58		[kN/m]				
1510012	PG	0.000	0.922	0.80		[kN/m]				
1510012	PG	0.000	0.922	3.58		[kN/m]				
1510013	PG	0.000	1.142	0.80		[kN/m]				
1510013	PG	0.000	1.142	3.58		[kN/m]				
1510014	PG	0.000	1.815	3.58		[kN/m]				
1510014	PG	0.000	1.815	0.80		[kN/m]				
1510015	PG	0.000	1.155	3.58		[kN/m]				
1510015	PG	0.000	1.155	0.80		[kN/m]				
1510016	PG	0.000	1.294	0.80		[kN/m]				
1510016	PG	0.000	1.294	3.58		[kN/m]				
1510017	PG	0.000	0.779	0.80		[kN/m]				
1510017	PG	0.000	0.779	3.58		[kN/m]				
1510018	PG	0.000	0.779	0.80		[kN/m]				
1510018	PG	0.000	0.779	3.58		[kN/m]				
1510019	PG	0.000	0.566	3.58		[kN/m]				
1510019	PG	0.000	0.566	0.80		[kN/m]				
1510020	PG	0.000	0.566	0.80		[kN/m]				
1510020	PG	0.000	0.566	3.58		[kN/m]				
1510021	PG	0.000	0.348	3.58		[kN/m]				
1510021	PG	0.000	0.348	0.80		[kN/m]				
1510022	PG	0.000	0.348	0.80		[kN/m]				
1510022	PG	0.000	0.348	3.58		[kN/m]				
1510023	PG	0.000	0.230	3.58		[kN/m]				
1510023	PG	0.000	0.230	0.80		[kN/m]				
1510024	PG	0.000	0.230	0.80		[kN/m]				
1510024	PG	0.000	0.230	3.58		[kN/m]				
1510025	PG	0.000	0.152	3.58		[kN/m]				
1510025	PG	0.000	0.152	0.80		[kN/m]				
1510026	PG	0.000	0.152	0.80		[kN/m]				
1510026	PG	0.000	0.152	3.58		[kN/m]				
1510027	PG	0.000	1.515	3.58		[kN/m]				
1510027	PG	0.000	1.515	0.80		[kN/m]				
1510028	PG	0.000	1.515	0.80		[kN/m]				
1510028	PG	0.000	1.515	3.58		[kN/m]				
1510029	PG	0.000	1.083	0.80		[kN/m]				
1510029	PG	0.000	1.083	3.58		[kN/m]				
1510030	PG	0.000	1.084	0.80		[kN/m]				
1510030	PG	0.000	1.084	3.58		[kN/m]				
1510031	PG	0.000	0.701	3.58		[kN/m]				
1510031	PG	0.000	0.701	0.80		[kN/m]				
1510032	PG	0.000	0.701	3.58		[kN/m]				
1510032	PG	0.000	0.701	0.80		[kN/m]				
1520001	PG	0.000	0.152	0.80		[kN/m]				
1520001	PG	0.000	0.152	3.58		[kN/m]				
1520002	PG	0.000	0.152	0.80		[kN/m]				
1520002	PG	0.000	0.152	3.58		[kN/m]				
1520003	PG	0.000	0.230	0.80		[kN/m]				
1520003	PG	0.000	0.230	3.58		[kN/m]				
1520004	PG	0.000	0.230	3.58		[kN/m]				
1520004	PG	0.000	0.230	0.80		[kN/m]				
1520005	PG	0.000	0.348	0.80		[kN/m]				
1520005	PG	0.000	0.348	3.58		[kN/m]				
1520006	PG	0.000	0.348	3.58		[kN/m]				
1520006	PG	0.000	0.348	0.80		[kN/m]				
1520007	PG	0.000	0.566	0.80		[kN/m]				
1520007	PG	0.000	0.566	3.58		[kN/m]				

SOFiSTiK AG - www.sofistik.de

Composite bridge 38+50+38, b=14.25m, 2x2HL1100R HISTAR460 , slab 0.30m C30/37
Dead and moving loads

Loads acting on Beam-elements

Number	Type	a[m]	l[m]	Loadval	Loadval	Dimens.	ya[m]	za[m]	ye[m]	ze[m]
1520008	PG	0.000	0.566	3.58		[kN/m]				
1520008	PG	0.000	0.566	0.80		[kN/m]				
1520009	PG	0.000	0.779	0.80		[kN/m]				
1520009	PG	0.000	0.779	3.58		[kN/m]				
1520010	PG	0.000	0.779	3.58		[kN/m]				
1520010	PG	0.000	0.779	0.80		[kN/m]				
1520011	PG	0.000	1.225	0.80		[kN/m]				
1520011	PG	0.000	1.225	3.58		[kN/m]				
1520012	PG	0.000	1.225	3.58		[kN/m]				
1520012	PG	0.000	1.225	0.80		[kN/m]				
1520013	PG	0.000	1.188	0.80		[kN/m]				
1520013	PG	0.000	1.188	3.58		[kN/m]				
1520014	PG	0.000	1.188	0.80		[kN/m]				
1520014	PG	0.000	1.188	3.58		[kN/m]				
1520015	PG	0.000	2.112	0.80		[kN/m]				
1520015	PG	0.000	2.112	3.58		[kN/m]				
1520016	PG	0.000	2.112	3.58		[kN/m]				
1520016	PG	0.000	2.112	0.80		[kN/m]				
1520017	PG	0.000	1.191	3.58		[kN/m]				
1520017	PG	0.000	1.191	0.80		[kN/m]				
1520018	PG	0.000	1.259	0.80		[kN/m]				
1520018	PG	0.000	1.259	3.58		[kN/m]				
1520019	PG	0.000	0.779	0.80		[kN/m]				
1520019	PG	0.000	0.779	3.58		[kN/m]				
1520020	PG	0.000	0.779	0.80		[kN/m]				
1520020	PG	0.000	0.779	3.58		[kN/m]				
1520021	PG	0.000	0.566	3.58		[kN/m]				
1520021	PG	0.000	0.566	0.80		[kN/m]				
1520022	PG	0.000	0.566	0.80		[kN/m]				
1520022	PG	0.000	0.566	3.58		[kN/m]				
1520023	PG	0.000	0.348	3.58		[kN/m]				
1520023	PG	0.000	0.348	0.80		[kN/m]				
1520024	PG	0.000	0.348	0.80		[kN/m]				
1520024	PG	0.000	0.348	3.58		[kN/m]				
1520025	PG	0.000	0.230	3.58		[kN/m]				
1520025	PG	0.000	0.230	0.80		[kN/m]				
1520026	PG	0.000	0.230	0.80		[kN/m]				
1520026	PG	0.000	0.230	3.58		[kN/m]				
1520027	PG	0.000	0.152	3.58		[kN/m]				
1520027	PG	0.000	0.152	0.80		[kN/m]				
1520028	PG	0.000	0.152	0.80		[kN/m]				
1520028	PG	0.000	0.152	3.58		[kN/m]				
1520029	PG	0.000	1.588	3.58		[kN/m]				
1520029	PG	0.000	1.588	0.80		[kN/m]				
1520030	PG	0.000	1.443	0.80		[kN/m]				
1520030	PG	0.000	1.443	3.58		[kN/m]				
1520031	PG	0.000	1.084	0.80		[kN/m]				
1520031	PG	0.000	1.084	3.58		[kN/m]				
1520032	PG	0.000	1.083	0.80		[kN/m]				
1520032	PG	0.000	1.083	3.58		[kN/m]				
1520033	PG	0.000	0.659	3.58		[kN/m]				
1520033	PG	0.000	0.659	0.80		[kN/m]				
1520034	PG	0.000	0.743	3.58		[kN/m]				
1520034	PG	0.000	0.743	0.80		[kN/m]				
1530001	PG	0.000	0.164	0.80		[kN/m]				
1530001	PG	0.000	0.164	3.58		[kN/m]				
1530002	PG	0.000	0.141	0.80		[kN/m]				
1530002	PG	0.000	0.141	3.58		[kN/m]				
1530003	PG	0.000	0.230	0.80		[kN/m]				
1530003	PG	0.000	0.230	3.58		[kN/m]				
1530004	PG	0.000	0.230	3.58		[kN/m]				
1530004	PG	0.000	0.230	0.80		[kN/m]				
1530005	PG	0.000	0.223	0.80		[kN/m]				
1530005	PG	0.000	0.223	3.58		[kN/m]				

SOFiSTiK AG - www.sofistik.de

Composite bridge 38+50+38, b=14.25m, 2x2HL1100R HISTAR460 , slab 0.30m C30/37
Dead and moving loads

Loads acting on Beam-elements

Number	Type	a[m]	l[m]	Loadval	Loadval Dimens.	ya[m]	za[m]	ye[m]	ze[m]
1530006	PG	0.000	0.473	3.58	[kN/m]				
1530006	PG	0.000	0.473	0.80	[kN/m]				
1530007	PG	0.000	0.615	0.80	[kN/m]				
1530007	PG	0.000	0.615	3.58	[kN/m]				
1530008	PG	0.000	0.517	3.58	[kN/m]				
1530008	PG	0.000	0.517	0.80	[kN/m]				
1530009	PG	0.000	0.779	0.80	[kN/m]				
1530009	PG	0.000	0.779	3.58	[kN/m]				
1530010	PG	0.000	0.779	3.58	[kN/m]				
1530010	PG	0.000	0.779	0.80	[kN/m]				
1530011	PG	0.000	1.225	0.80	[kN/m]				
1530011	PG	0.000	1.225	3.58	[kN/m]				
1530012	PG	0.000	1.225	3.58	[kN/m]				
1530012	PG	0.000	1.225	0.80	[kN/m]				
1530013	PG	0.000	0.988	0.80	[kN/m]				
1530013	PG	0.000	0.988	3.58	[kN/m]				
1530014	PG	0.000	1.388	0.80	[kN/m]				
1530014	PG	0.000	1.388	3.58	[kN/m]				
1530015	PG	0.000	1.747	0.80	[kN/m]				
1530015	PG	0.000	1.747	3.58	[kN/m]				
1530016	PG	0.000	2.477	3.58	[kN/m]				
1530016	PG	0.000	2.477	0.80	[kN/m]				
1530017	PG	0.000	0.923	3.58	[kN/m]				
1530017	PG	0.000	0.923	0.80	[kN/m]				
1530018	PG	0.000	0.923	0.80	[kN/m]				
1530018	PG	0.000	0.923	3.58	[kN/m]				
1530019	PG	0.000	0.659	0.80	[kN/m]				
1530019	PG	0.000	0.659	3.58	[kN/m]				
1530020	PG	0.000	0.659	0.80	[kN/m]				
1530020	PG	0.000	0.659	3.58	[kN/m]				
1530021	PG	0.000	0.468	3.58	[kN/m]				
1530021	PG	0.000	0.468	0.80	[kN/m]				
1530022	PG	0.000	0.334	0.80	[kN/m]				
1530022	PG	0.000	0.334	3.58	[kN/m]				
1530023	PG	0.000	0.255	3.58	[kN/m]				
1530023	PG	0.000	0.255	0.80	[kN/m]				
1530024	PG	0.000	0.255	0.80	[kN/m]				
1530024	PG	0.000	0.255	3.58	[kN/m]				
1530025	PG	0.000	0.162	3.58	[kN/m]				
1530025	PG	0.000	0.162	0.80	[kN/m]				
1530026	PG	0.000	0.162	0.80	[kN/m]				
1530026	PG	0.000	0.162	3.58	[kN/m]				
1530027	PG	0.000	1.478	3.58	[kN/m]				
1530027	PG	0.000	1.478	0.80	[kN/m]				
1530028	PG	0.000	1.478	0.80	[kN/m]				
1530028	PG	0.000	1.478	3.58	[kN/m]				
1530029	PG	0.000	0.922	3.58	[kN/m]				
1530029	PG	0.000	0.922	0.80	[kN/m]				
1530030	PG	0.000	0.922	0.80	[kN/m]				
1530030	PG	0.000	0.922	3.58	[kN/m]				

Load Case 3 (G_1) mokrbet

Factor forces and moments		1.000	
Factor dead weight	DL-XX	0.000	
Factor dead weight	DL-YY	0.000	
Factor dead weight	DL-ZZ	0.000	
unfavourable safety factor		1.350	
favourable safety factor		1.000	
Combination coefficient ψ-0		1.000	(rare)
Combination coefficient ψ-1'		1.000	(non frequent)
Combination coefficient ψ-1		1.000	(frequent)
Combination coefficient ψ-2		1.000	(permanent)

SOFiSTiK AG - www.sofistik.de

Composite bridge 38+50+38, b=14.25m, 2x2HL1100R HISTAR460 , slab 0.30m C30/37
Dead and moving loads

Loads acting on Beam-elements

Number	Type	a[m]	l[m]	Loadval	Loadval Dimens.	ya[m]	za[m]	ye[m]	ze[m]
510001	PG	0.000	2.375	2.19	[kN/m]				
510002	PG	0.000	2.375	2.19	[kN/m]				
510003	PG	0.000	2.375	2.19	[kN/m]				
510004	PG	0.000	2.375	2.19	[kN/m]				
510005	PG	0.000	1.625	2.19	[kN/m]				
510006	PG	0.000	1.625	2.19	[kN/m]				
510007	PG	0.000	1.642	2.19	[kN/m]				
510008	PG	0.000	1.608	2.19	[kN/m]				
510009	PG	0.000	2.500	2.19	[kN/m]				
510010	PG	0.000	2.500	2.19	[kN/m]				
510011	PG	0.000	2.000	2.19	[kN/m]				
510012	PG	0.000	2.000	2.19	[kN/m]				
510013	PG	0.000	2.000	2.19	[kN/m]				
510014	PG	0.000	2.000	2.19	[kN/m]				
510015	PG	0.000	2.000	2.19	[kN/m]				
510016	PG	0.000	2.000	2.19	[kN/m]				
510017	PG	0.000	2.172	2.19	[kN/m]				
510018	PG	0.000	1.828	2.19	[kN/m]				
510019	PG	0.000	2.843	2.19	[kN/m]				
510020	PG	0.000	2.157	2.19	[kN/m]				
510021	PG	0.000	1.900	2.19	[kN/m]				
510022	PG	0.000	1.900	2.19	[kN/m]				
510023	PG	0.000	1.900	2.19	[kN/m]				
510024	PG	0.000	1.900	2.19	[kN/m]				
520001	PG	0.000	1.783	2.19	[kN/m]				
520002	PG	0.000	2.383	2.19	[kN/m]				
520003	PG	0.000	2.571	2.19	[kN/m]				
520004	PG	0.000	1.596	2.19	[kN/m]				
520005	PG	0.000	1.883	2.19	[kN/m]				
520006	PG	0.000	2.284	2.19	[kN/m]				
520007	PG	0.000	2.083	2.19	[kN/m]				
520008	PG	0.000	2.083	2.19	[kN/m]				
520009	PG	0.000	2.083	2.19	[kN/m]				
520010	PG	0.000	2.083	2.19	[kN/m]				
520011	PG	0.000	2.083	2.19	[kN/m]				
520012	PG	0.000	2.083	2.19	[kN/m]				
520013	PG	0.000	2.500	2.19	[kN/m]				
520014	PG	0.000	2.500	2.19	[kN/m]				
520015	PG	0.000	1.658	2.19	[kN/m]				
520016	PG	0.000	2.509	2.19	[kN/m]				
520017	PG	0.000	2.554	2.19	[kN/m]				
520018	PG	0.000	1.613	2.19	[kN/m]				
520019	PG	0.000	1.892	2.19	[kN/m]				
520020	PG	0.000	2.275	2.19	[kN/m]				
520021	PG	0.000	2.083	2.19	[kN/m]				
520022	PG	0.000	2.083	2.19	[kN/m]				
520023	PG	0.000	2.083	2.19	[kN/m]				
520024	PG	0.000	2.083	2.19	[kN/m]				
520025	PG	0.000	2.083	2.19	[kN/m]				
520026	PG	0.000	2.083	2.19	[kN/m]				
520027	PG	0.000	2.491	2.19	[kN/m]				
520028	PG	0.000	2.509	2.19	[kN/m]				
520029	PG	0.000	2.500	2.19	[kN/m]				
520030	PG	0.000	2.500	2.19	[kN/m]				
520031	PG	0.000	2.500	2.19	[kN/m]				
520032	PG	0.000	2.500	2.19	[kN/m]				
530001	PG	0.000	1.625	2.19	[kN/m]				
530002	PG	0.000	1.625	2.19	[kN/m]				
530003	PG	0.000	1.625	2.19	[kN/m]				
530004	PG	0.000	1.625	2.19	[kN/m]				
530005	PG	0.000	2.375	2.19	[kN/m]				
530006	PG	0.000	2.375	2.19	[kN/m]				
530007	PG	0.000	2.375	2.19	[kN/m]				
530008	PG	0.000	2.375	2.19	[kN/m]				

SOFiSTiK AG - www.sofistik.de

Composite bridge 38+50+38, b=14.25m, 2x2HL1100R HISTAR460 , slab 0.30m C30/37
Dead and moving loads

Loads acting on Beam-elements

Number	Type	a[m]	l[m]	Loadval	Loadval Dimens.	ya[m]	za[m]	ye[m]	ze[m]
530009	PG	0.000	1.900	2.19	[kN/m]				
530010	PG	0.000	1.900	2.19	[kN/m]				
530011	PG	0.000	2.000	2.19	[kN/m]				
530012	PG	0.000	2.000	2.19	[kN/m]				
530013	PG	0.000	2.000	2.19	[kN/m]				
530014	PG	0.000	2.000	2.19	[kN/m]				
530015	PG	0.000	2.000	2.19	[kN/m]				
530016	PG	0.000	2.000	2.19	[kN/m]				
530017	PG	0.000	2.000	2.19	[kN/m]				
530018	PG	0.000	2.000	2.19	[kN/m]				
530019	PG	0.000	1.900	2.19	[kN/m]				
530020	PG	0.000	1.900	2.19	[kN/m]				
530021	PG	0.000	2.500	2.19	[kN/m]				
530022	PG	0.000	2.500	2.19	[kN/m]				
530023	PG	0.000	2.500	2.19	[kN/m]				
530024	PG	0.000	2.500	2.19	[kN/m]				
1510001	PG	0.000	0.162	2.19	[kN/m]				
1510002	PG	0.000	0.162	2.19	[kN/m]				
1510003	PG	0.000	0.255	2.19	[kN/m]				
1510004	PG	0.000	0.255	2.19	[kN/m]				
1510005	PG	0.000	0.401	2.19	[kN/m]				
1510006	PG	0.000	0.401	2.19	[kN/m]				
1510007	PG	0.000	0.585	2.19	[kN/m]				
1510008	PG	0.000	0.733	2.19	[kN/m]				
1510009	PG	0.000	0.923	2.19	[kN/m]				
1510010	PG	0.000	0.923	2.19	[kN/m]				
1510011	PG	0.000	0.922	2.19	[kN/m]				
1510012	PG	0.000	0.922	2.19	[kN/m]				
1510013	PG	0.000	1.142	2.19	[kN/m]				
1510014	PG	0.000	1.815	2.19	[kN/m]				
1510015	PG	0.000	1.155	2.19	[kN/m]				
1510016	PG	0.000	1.294	2.19	[kN/m]				
1510017	PG	0.000	0.779	2.19	[kN/m]				
1510018	PG	0.000	0.779	2.19	[kN/m]				
1510019	PG	0.000	0.566	2.19	[kN/m]				
1510020	PG	0.000	0.566	2.19	[kN/m]				
1510021	PG	0.000	0.348	2.19	[kN/m]				
1510022	PG	0.000	0.348	2.19	[kN/m]				
1510023	PG	0.000	0.230	2.19	[kN/m]				
1510024	PG	0.000	0.230	2.19	[kN/m]				
1510025	PG	0.000	0.152	2.19	[kN/m]				
1510026	PG	0.000	0.152	2.19	[kN/m]				
1510027	PG	0.000	1.515	2.19	[kN/m]				
1510028	PG	0.000	1.515	2.19	[kN/m]				
1510029	PG	0.000	1.083	2.19	[kN/m]				
1510030	PG	0.000	1.084	2.19	[kN/m]				
1510031	PG	0.000	0.701	2.19	[kN/m]				
1510032	PG	0.000	0.701	2.19	[kN/m]				
1520001	PG	0.000	0.152	2.19	[kN/m]				
1520002	PG	0.000	0.152	2.19	[kN/m]				
1520003	PG	0.000	0.230	2.19	[kN/m]				
1520004	PG	0.000	0.230	2.19	[kN/m]				
1520005	PG	0.000	0.348	2.19	[kN/m]				
1520006	PG	0.000	0.348	2.19	[kN/m]				
1520007	PG	0.000	0.566	2.19	[kN/m]				
1520008	PG	0.000	0.566	2.19	[kN/m]				
1520009	PG	0.000	0.779	2.19	[kN/m]				
1520010	PG	0.000	0.779	2.19	[kN/m]				
1520011	PG	0.000	1.225	2.19	[kN/m]				
1520012	PG	0.000	1.225	2.19	[kN/m]				
1520013	PG	0.000	1.188	2.19	[kN/m]				
1520014	PG	0.000	1.188	2.19	[kN/m]				
1520015	PG	0.000	2.112	2.19	[kN/m]				
1520016	PG	0.000	2.112	2.19	[kN/m]				

SOFiSTiK AG - www.sofistik.de

Composite bridge 38+50+38, b=14.25m, 2x2HL1100R HISTAR460 , slab 0.30m C30/37
Dead and moving loads

Loads acting on Beam-elements

Number	Type	a[m]	l[m]	Loadval	Loadval Dimens.	ya[m]	za[m]	ye[m]	ze[m]
1520017	PG	0.000	1.191	2.19	[kN/m]				
1520018	PG	0.000	1.259	2.19	[kN/m]				
1520019	PG	0.000	0.779	2.19	[kN/m]				
1520020	PG	0.000	0.779	2.19	[kN/m]				
1520021	PG	0.000	0.566	2.19	[kN/m]				
1520022	PG	0.000	0.566	2.19	[kN/m]				
1520023	PG	0.000	0.348	2.19	[kN/m]				
1520024	PG	0.000	0.348	2.19	[kN/m]				
1520025	PG	0.000	0.230	2.19	[kN/m]				
1520026	PG	0.000	0.230	2.19	[kN/m]				
1520027	PG	0.000	0.152	2.19	[kN/m]				
1520028	PG	0.000	0.152	2.19	[kN/m]				
1520029	PG	0.000	1.588	2.19	[kN/m]				
1520030	PG	0.000	1.443	2.19	[kN/m]				
1520031	PG	0.000	1.084	2.19	[kN/m]				
1520032	PG	0.000	1.083	2.19	[kN/m]				
1520033	PG	0.000	0.659	2.19	[kN/m]				
1520034	PG	0.000	0.743	2.19	[kN/m]				
1530001	PG	0.000	0.164	2.19	[kN/m]				
1530002	PG	0.000	0.141	2.19	[kN/m]				
1530003	PG	0.000	0.230	2.19	[kN/m]				
1530004	PG	0.000	0.230	2.19	[kN/m]				
1530005	PG	0.000	0.223	2.19	[kN/m]				
1530006	PG	0.000	0.473	2.19	[kN/m]				
1530007	PG	0.000	0.615	2.19	[kN/m]				
1530008	PG	0.000	0.517	2.19	[kN/m]				
1530009	PG	0.000	0.779	2.19	[kN/m]				
1530010	PG	0.000	0.779	2.19	[kN/m]				
1530011	PG	0.000	1.225	2.19	[kN/m]				
1530012	PG	0.000	1.225	2.19	[kN/m]				
1530013	PG	0.000	0.988	2.19	[kN/m]				
1530014	PG	0.000	1.388	2.19	[kN/m]				
1530015	PG	0.000	1.747	2.19	[kN/m]				
1530016	PG	0.000	2.477	2.19	[kN/m]				
1530017	PG	0.000	0.923	2.19	[kN/m]				
1530018	PG	0.000	0.923	2.19	[kN/m]				
1530019	PG	0.000	0.659	2.19	[kN/m]				
1530020	PG	0.000	0.659	2.19	[kN/m]				
1530021	PG	0.000	0.468	2.19	[kN/m]				
1530022	PG	0.000	0.334	2.19	[kN/m]				
1530023	PG	0.000	0.255	2.19	[kN/m]				
1530024	PG	0.000	0.255	2.19	[kN/m]				
1530025	PG	0.000	0.162	2.19	[kN/m]				
1530026	PG	0.000	0.162	2.19	[kN/m]				
1530027	PG	0.000	1.478	2.19	[kN/m]				
1530028	PG	0.000	1.478	2.19	[kN/m]				
1530029	PG	0.000	0.922	2.19	[kN/m]				
1530030	PG	0.000	0.922	2.19	[kN/m]				

Load Case 4 (G_1) prefabrykaty

Factor forces and moments		1.000	
Factor dead weight	DL-XX	0.000	
Factor dead weight	DL-YY	0.000	
Factor dead weight	DL-ZZ	0.000	
unfavourable safety factor		1.350	
favourable safety factor		1.000	
Combination coefficient ψ-0		1.000	(rare)
Combination coefficient ψ-1'		1.000	(non frequent)
Combination coefficient ψ-1		1.000	(frequent)
Combination coefficient ψ-2		1.000	(permanent)

SOFiSTiK AG - www.sofistik.de

Composite bridge 38+50+38, b=14.25m, 2x2HL1100R HISTAR460 , slab 0.30m C30/37
Dead and moving loads

Loads acting on Beam-elements

Number	Type	a[m]	l[m]	Loadval	Loadval	Dimens.	ya[m]	za[m]	ye[m]	ze[m]
510001	PG	0.000	2.375	0.01		[kN/m]				
510002	PG	0.000	2.375	0.01		[kN/m]				
510003	PG	0.000	2.375	0.01		[kN/m]				
510004	PG	0.000	2.375	0.01		[kN/m]				
510005	PG	0.000	1.625	0.01		[kN/m]				
510006	PG	0.000	1.625	0.01		[kN/m]				
510007	PG	0.000	1.642	0.01		[kN/m]				
510008	PG	0.000	1.608	0.01		[kN/m]				
510009	PG	0.000	2.500	0.01		[kN/m]				
510010	PG	0.000	2.500	0.01		[kN/m]				
510011	PG	0.000	2.000	0.01		[kN/m]				
510012	PG	0.000	2.000	0.01		[kN/m]				
510013	PG	0.000	2.000	0.01		[kN/m]				
510014	PG	0.000	2.000	0.01		[kN/m]				
510015	PG	0.000	2.000	0.01		[kN/m]				
510016	PG	0.000	2.000	0.01		[kN/m]				
510017	PG	0.000	2.172	0.01		[kN/m]				
510018	PG	0.000	1.828	0.01		[kN/m]				
510019	PG	0.000	2.843	0.01		[kN/m]				
510020	PG	0.000	2.157	0.01		[kN/m]				
510021	PG	0.000	1.900	0.01		[kN/m]				
510022	PG	0.000	1.900	0.01		[kN/m]				
510023	PG	0.000	1.900	0.01		[kN/m]				
510024	PG	0.000	1.900	0.01		[kN/m]				
520001	PG	0.000	1.783	0.01		[kN/m]				
520002	PG	0.000	2.383	0.01		[kN/m]				
520003	PG	0.000	2.571	0.01		[kN/m]				
520004	PG	0.000	1.596	0.01		[kN/m]				
520005	PG	0.000	1.883	0.01		[kN/m]				
520006	PG	0.000	2.284	0.01		[kN/m]				
520007	PG	0.000	2.083	0.01		[kN/m]				
520008	PG	0.000	2.083	0.01		[kN/m]				
520009	PG	0.000	2.083	0.01		[kN/m]				
520010	PG	0.000	2.083	0.01		[kN/m]				
520011	PG	0.000	2.083	0.01		[kN/m]				
520012	PG	0.000	2.083	0.01		[kN/m]				
520013	PG	0.000	2.500	0.01		[kN/m]				
520014	PG	0.000	2.500	0.01		[kN/m]				
520015	PG	0.000	1.658	0.01		[kN/m]				
520016	PG	0.000	2.509	0.01		[kN/m]				
520017	PG	0.000	2.554	0.01		[kN/m]				
520018	PG	0.000	1.613	0.01		[kN/m]				
520019	PG	0.000	1.892	0.01		[kN/m]				
520020	PG	0.000	2.275	0.01		[kN/m]				
520021	PG	0.000	2.083	0.01		[kN/m]				
520022	PG	0.000	2.083	0.01		[kN/m]				
520023	PG	0.000	2.083	0.01		[kN/m]				
520024	PG	0.000	2.083	0.01		[kN/m]				
520025	PG	0.000	2.083	0.01		[kN/m]				
520026	PG	0.000	2.083	0.01		[kN/m]				
520027	PG	0.000	2.491	0.01		[kN/m]				
520028	PG	0.000	2.509	0.01		[kN/m]				
520029	PG	0.000	2.500	0.01		[kN/m]				
520030	PG	0.000	2.500	0.01		[kN/m]				
520031	PG	0.000	2.500	0.01		[kN/m]				
520032	PG	0.000	2.500	0.01		[kN/m]				
530001	PG	0.000	1.625	0.01		[kN/m]				
530002	PG	0.000	1.625	0.01		[kN/m]				
530003	PG	0.000	1.625	0.01		[kN/m]				
530004	PG	0.000	1.625	0.01		[kN/m]				
530005	PG	0.000	2.375	0.01		[kN/m]				
530006	PG	0.000	2.375	0.01		[kN/m]				
530007	PG	0.000	2.375	0.01		[kN/m]				
530008	PG	0.000	2.375	0.01		[kN/m]				

SOFiSTiK AG - www.sofistik.de

Composite bridge 38+50+38, b=14.25m, 2x2HL1100R HISTAR460 , slab 0.30m C30/37
Dead and moving loads

Loads acting on Beam-elements

Number	Type	a[m]	l[m]	Loadval	Loadval	Dimens.	ya[m]	za[m]	ye[m]	ze[m]
530009	PG	0.000	1.900	0.01		[kN/m]				
530010	PG	0.000	1.900	0.01		[kN/m]				
530011	PG	0.000	2.000	0.01		[kN/m]				
530012	PG	0.000	2.000	0.01		[kN/m]				
530013	PG	0.000	2.000	0.01		[kN/m]				
530014	PG	0.000	2.000	0.01		[kN/m]				
530015	PG	0.000	2.000	0.01		[kN/m]				
530016	PG	0.000	2.000	0.01		[kN/m]				
530017	PG	0.000	2.000	0.01		[kN/m]				
530018	PG	0.000	2.000	0.01		[kN/m]				
530019	PG	0.000	1.900	0.01		[kN/m]				
530020	PG	0.000	1.900	0.01		[kN/m]				
530021	PG	0.000	2.500	0.01		[kN/m]				
530022	PG	0.000	2.500	0.01		[kN/m]				
530023	PG	0.000	2.500	0.01		[kN/m]				
530024	PG	0.000	2.500	0.01		[kN/m]				
1510001	PG	0.000	0.162	0.01		[kN/m]				
1510002	PG	0.000	0.162	0.01		[kN/m]				
1510003	PG	0.000	0.255	0.01		[kN/m]				
1510004	PG	0.000	0.255	0.01		[kN/m]				
1510005	PG	0.000	0.401	0.01		[kN/m]				
1510006	PG	0.000	0.401	0.01		[kN/m]				
1510007	PG	0.000	0.585	0.01		[kN/m]				
1510008	PG	0.000	0.733	0.01		[kN/m]				
1510009	PG	0.000	0.923	0.01		[kN/m]				
1510010	PG	0.000	0.923	0.01		[kN/m]				
1510011	PG	0.000	0.922	0.01		[kN/m]				
1510012	PG	0.000	0.922	0.01		[kN/m]				
1510013	PG	0.000	1.142	0.01		[kN/m]				
1510014	PG	0.000	1.815	0.01		[kN/m]				
1510015	PG	0.000	1.155	0.01		[kN/m]				
1510016	PG	0.000	1.294	0.01		[kN/m]				
1510017	PG	0.000	0.779	0.01		[kN/m]				
1510018	PG	0.000	0.779	0.01		[kN/m]				
1510019	PG	0.000	0.566	0.01		[kN/m]				
1510020	PG	0.000	0.566	0.01		[kN/m]				
1510021	PG	0.000	0.348	0.01		[kN/m]				
1510022	PG	0.000	0.348	0.01		[kN/m]				
1510023	PG	0.000	0.230	0.01		[kN/m]				
1510024	PG	0.000	0.230	0.01		[kN/m]				
1510025	PG	0.000	0.152	0.01		[kN/m]				
1510026	PG	0.000	0.152	0.01		[kN/m]				
1510027	PG	0.000	1.515	0.01		[kN/m]				
1510028	PG	0.000	1.515	0.01		[kN/m]				
1510029	PG	0.000	1.083	0.01		[kN/m]				
1510030	PG	0.000	1.084	0.01		[kN/m]				
1510031	PG	0.000	0.701	0.01		[kN/m]				
1510032	PG	0.000	0.701	0.01		[kN/m]				
1520001	PG	0.000	0.152	0.01		[kN/m]				
1520002	PG	0.000	0.152	0.01		[kN/m]				
1520003	PG	0.000	0.230	0.01		[kN/m]				
1520004	PG	0.000	0.230	0.01		[kN/m]				
1520005	PG	0.000	0.348	0.01		[kN/m]				
1520006	PG	0.000	0.348	0.01		[kN/m]				
1520007	PG	0.000	0.566	0.01		[kN/m]				
1520008	PG	0.000	0.566	0.01		[kN/m]				
1520009	PG	0.000	0.779	0.01		[kN/m]				
1520010	PG	0.000	0.779	0.01		[kN/m]				
1520011	PG	0.000	1.225	0.01		[kN/m]				
1520012	PG	0.000	1.225	0.01		[kN/m]				
1520013	PG	0.000	1.188	0.01		[kN/m]				
1520014	PG	0.000	1.188	0.01		[kN/m]				
1520015	PG	0.000	2.112	0.01		[kN/m]				
1520016	PG	0.000	2.112	0.01		[kN/m]				

SOFiSTiK AG - www.sofistik.de

Composite bridge 38+50+38, b=14.25m, 2x2HL1100R HISTAR460 , slab 0.30m C30/37
Dead and moving loads

Loads acting on Beam-elements

Number	Type	a[m]	l[m]	Loadval	Loadval Dimens.	ya[m]	za[m]	ye[m]	ze[m]
1520017	PG	0.000	1.191	0.01	[kN/m]				
1520018	PG	0.000	1.259	0.01	[kN/m]				
1520019	PG	0.000	0.779	0.01	[kN/m]				
1520020	PG	0.000	0.779	0.01	[kN/m]				
1520021	PG	0.000	0.566	0.01	[kN/m]				
1520022	PG	0.000	0.566	0.01	[kN/m]				
1520023	PG	0.000	0.348	0.01	[kN/m]				
1520024	PG	0.000	0.348	0.01	[kN/m]				
1520025	PG	0.000	0.230	0.01	[kN/m]				
1520026	PG	0.000	0.230	0.01	[kN/m]				
1520027	PG	0.000	0.152	0.01	[kN/m]				
1520028	PG	0.000	0.152	0.01	[kN/m]				
1520029	PG	0.000	1.588	0.01	[kN/m]				
1520030	PG	0.000	1.443	0.01	[kN/m]				
1520031	PG	0.000	1.084	0.01	[kN/m]				
1520032	PG	0.000	1.083	0.01	[kN/m]				
1520033	PG	0.000	0.659	0.01	[kN/m]				
1520034	PG	0.000	0.743	0.01	[kN/m]				
1530001	PG	0.000	0.164	0.01	[kN/m]				
1530002	PG	0.000	0.141	0.01	[kN/m]				
1530003	PG	0.000	0.230	0.01	[kN/m]				
1530004	PG	0.000	0.230	0.01	[kN/m]				
1530005	PG	0.000	0.223	0.01	[kN/m]				
1530006	PG	0.000	0.473	0.01	[kN/m]				
1530007	PG	0.000	0.615	0.01	[kN/m]				
1530008	PG	0.000	0.517	0.01	[kN/m]				
1530009	PG	0.000	0.779	0.01	[kN/m]				
1530010	PG	0.000	0.779	0.01	[kN/m]				
1530011	PG	0.000	1.225	0.01	[kN/m]				
1530012	PG	0.000	1.225	0.01	[kN/m]				
1530013	PG	0.000	0.988	0.01	[kN/m]				
1530014	PG	0.000	1.388	0.01	[kN/m]				
1530015	PG	0.000	1.747	0.01	[kN/m]				
1530016	PG	0.000	2.477	0.01	[kN/m]				
1530017	PG	0.000	0.923	0.01	[kN/m]				
1530018	PG	0.000	0.923	0.01	[kN/m]				
1530019	PG	0.000	0.659	0.01	[kN/m]				
1530020	PG	0.000	0.659	0.01	[kN/m]				
1530021	PG	0.000	0.468	0.01	[kN/m]				
1530022	PG	0.000	0.334	0.01	[kN/m]				
1530023	PG	0.000	0.255	0.01	[kN/m]				
1530024	PG	0.000	0.255	0.01	[kN/m]				
1530025	PG	0.000	0.162	0.01	[kN/m]				
1530026	PG	0.000	0.162	0.01	[kN/m]				
1530027	PG	0.000	1.478	0.01	[kN/m]				
1530028	PG	0.000	1.478	0.01	[kN/m]				
1530029	PG	0.000	0.922	0.01	[kN/m]				
1530030	PG	0.000	0.922	0.01	[kN/m]				

Load Case 5 (G_2) gn

Factor forces and moments		1.000	
Factor dead weight	DL-XX	0.000	
Factor dead weight	DL-YY	0.000	
Factor dead weight	DL-ZZ	0.000	
unfavourable safety factor		1.350	
favourable safety factor		1.000	
Combination coefficient ψ-0		1.000	(rare)
Combination coefficient ψ-1'		1.000	(non frequent)
Combination coefficient ψ-1		1.000	(frequent)
Combination coefficient ψ-2		1.000	(permanent)

SOFiSTiK AG - www.sofistik.de

Composite bridge 38+50+38, b=14.25m, 2x2HL1100R HISTAR460 , slab 0.30m C30/37
Dead and moving loads

Loads

Kind	Referenceto	Projection W[m]	Coordinates X[m]	Y[m]	Z[m]	Type	Loadvalue	
Area			0.000	-3.125	0.000	PG	6.03	[kN/m2]
			126.000	-3.125	0.000		6.03	[kN/m2]
			126.000	1.575	0.000		6.03	[kN/m2]
			0.000	1.575	0.000		6.03	[kN/m2]
	gar -mult-				activated		100.00	percent
Line			0.000	-3.125	0.000	PG	0.86	[kN/m]
			126.000	-3.125	0.000		0.86	[kN/m]
	gar -mult-				activated		100.00	percent
Line			0.000	1.575	0.000	PG	0.86	[kN/m]
			126.000	1.575	0.000		0.86	[kN/m]
	gar -mult-				activated		100.00	percent
Area			0.000	1.575	0.000	PG	2.62	[kN/m2]
			126.000	1.575	0.000		2.62	[kN/m2]
			126.000	10.175	0.000		2.62	[kN/m2]
			0.000	10.175	0.000		2.62	[kN/m2]
	gar -mult-				activated		100.00	percent
Area			0.000	10.175	0.000	PG	6.03	[kN/m2]
			126.000	10.175	0.000		6.03	[kN/m2]
			126.000	11.125	0.000		6.03	[kN/m2]
			0.000	11.125	0.000		6.03	[kN/m2]
	gar -mult-				activated		100.00	percent
Line			0.000	10.175	0.000	PG	0.86	[kN/m]
			126.000	10.175	0.000		0.86	[kN/m]
	gar -mult-				activated		100.00	percent
Line			0.000	11.125	0.000	PG	0.86	[kN/m]
			126.000	11.125	0.000		0.86	[kN/m]
	gar -mult-				activated		100.00	percent

Load Case 6 (G) soil Ka:g

Factor forces and moments		1.000
Factor dead weight	DL-XX	0.000
Factor dead weight	DL-YY	0.000
Factor dead weight	DL-ZZ	0.000
unfavourable safety factor		1.350
favourable safety factor		1.000
Combination coefficient ψ-0		1.000 (rare)
Combination coefficient ψ-1'		1.000 (non frequent)
Combination coefficient ψ-1		1.000 (frequent)
Combination coefficient ψ-2		1.000 (permanent)

Loads

Kind	Referenceto	Projection W[m]	Coordinates X[m]	Y[m]	Z[m]	Type	Loadvalue	
Area			0.000	-3.125	0.000	Pz	0.00	[kN/m2]
			0.000	11.125	0.000		0.00	[kN/m2]
			0.000	11.125	12.000		72.00	[kN/m2]
			0.000	-3.125	12.000		72.00	[kN/m2]
	Gar 1010		(--)		activated		70.42	percent
Area			126.000	-3.125	0.000	Pz	0.00	[kN/m2]
			126.000	11.125	0.000		0.00	[kN/m2]
			126.000	11.125	12.000		-72.00	[kN/m2]
			126.000	-3.125	12.000		-72.00	[kN/m2]
	Gar 4010		(--)		activated		70.42	percent

SOFiSTiK AG - www.sofistik.de

Composite bridge 38+50+38, b=14.25m, 2x2HL1100R HISTAR460 , slab 0.30m C30/37
Dead and moving loads

Load Case 11 (Q_1) q2.5-lane1-L

Factor forces and moments		1.000	
Factor dead weight	DL-XX	0.000	
Factor dead weight	DL-YY	0.000	
Factor dead weight	DL-ZZ	0.000	
unfavourable safety factor		1.500	
favourable safety factor		0.000	
Combination coefficient ψ-0		0.750	(rare)
Combination coefficient ψ-1'		0.800	(non frequent)
Combination coefficient ψ-1		0.750	(frequent)
Combination coefficient ψ-2		0.200	(permanent)

Loads

Kind	Referenceto	Projection W[m]	Coordinates X[m]	Y[m]	Z[m]	Type	Loadvalue
Area			0.000	1.575	0.000	Pz	2.50 [kN/m2]
			38.000	1.575	0.000		2.50 [kN/m2]
			38.000	4.575	0.000		2.50 [kN/m2]
			0.000	4.575	0.000		2.50 [kN/m2]
	gar	1100			activated		100.00 percent

Load Case 12 (Q_1) q2.5-lane2-L

Factor forces and moments		1.000	
Factor dead weight	DL-XX	0.000	
Factor dead weight	DL-YY	0.000	
Factor dead weight	DL-ZZ	0.000	
unfavourable safety factor		1.500	
favourable safety factor		0.000	
Combination coefficient ψ-0		0.750	(rare)
Combination coefficient ψ-1'		0.800	(non frequent)
Combination coefficient ψ-1		0.750	(frequent)
Combination coefficient ψ-2		0.200	(permanent)

Loads

Kind	Referenceto	Projection W[m]	Coordinates X[m]	Y[m]	Z[m]	Type	Loadvalue
Area			0.000	4.575	0.000	Pz	2.50 [kN/m2]
			38.000	4.575	0.000		2.50 [kN/m2]
			38.000	7.575	0.000		2.50 [kN/m2]
			0.000	7.575	0.000		2.50 [kN/m2]
	gar	1100			activated		100.00 percent

Load Case 14 (Q_1) q2.5-remain-L

Factor forces and moments		1.000	
Factor dead weight	DL-XX	0.000	
Factor dead weight	DL-YY	0.000	
Factor dead weight	DL-ZZ	0.000	
unfavourable safety factor		1.500	
favourable safety factor		0.000	
Combination coefficient ψ-0		0.750	(rare)
Combination coefficient ψ-1'		0.800	(non frequent)
Combination coefficient ψ-1		0.750	(frequent)
Combination coefficient ψ-2		0.200	(permanent)

Loads

Kind	Referenceto	Projection W[m]	Coordinates X[m]	Y[m]	Z[m]	Type	Loadvalue
Area			0.000	7.575	0.000	Pz	2.50 [kN/m2]
			38.000	7.575	0.000		2.50 [kN/m2]
			38.000	10.175	0.000		2.50 [kN/m2]
			0.000	10.175	0.000		2.50 [kN/m2]
	gar	-mult-			activated		100.00 percent

SOFiSTiK AG - www.sofistik.de

Composite bridge 38+50+38, b=14.25m, 2x2HL1100R HISTAR460 , slab 0.30m C30/37
Dead and moving loads

Load Case 15 (Q_1) deltaq6.5-lane1-L

Factor forces and moments		1.000	
Factor dead weight	DL-XX	0.000	
Factor dead weight	DL-YY	0.000	
Factor dead weight	DL-ZZ	0.000	
unfavourable safety factor		1.500	
favourable safety factor		0.000	
Combination coefficient ψ-0		0.750	(rare)
Combination coefficient ψ-1'		0.800	(non frequent)
Combination coefficient ψ-1		0.750	(frequent)
Combination coefficient ψ-2		0.200	(permanent)

Loads

Kind	Referenceto	Projection W[m]	Coordinates X[m]	Y[m]	Z[m]	Type	Loadvalue
Area			0.000	1.575	0.000	Pz	6.50 [kN/m2]
			38.000	1.575	0.000		6.50 [kN/m2]
			38.000	4.575	0.000		6.50 [kN/m2]
			0.000	4.575	0.000		6.50 [kN/m2]
	gar	1100			activated		100.00 percent

Load Case 16 (Q_1) deltaq6.5-lane2-L

Factor forces and moments		1.000	
Factor dead weight	DL-XX	0.000	
Factor dead weight	DL-YY	0.000	
Factor dead weight	DL-ZZ	0.000	
unfavourable safety factor		1.500	
favourable safety factor		0.000	
Combination coefficient ψ-0		0.750	(rare)
Combination coefficient ψ-1'		0.800	(non frequent)
Combination coefficient ψ-1		0.750	(frequent)
Combination coefficient ψ-2		0.200	(permanent)

Loads

Kind	Referenceto	Projection W[m]	Coordinates X[m]	Y[m]	Z[m]	Type	Loadvalue
Area			0.000	4.575	0.000	Pz	6.50 [kN/m2]
			38.000	4.575	0.000		6.50 [kN/m2]
			38.000	7.575	0.000		6.50 [kN/m2]
			0.000	7.575	0.000		6.50 [kN/m2]
	gar	1100			activated		100.00 percent

Load Case 18 (Q_1) pedstrian-L

Factor forces and moments		1.000	
Factor dead weight	DL-XX	0.000	
Factor dead weight	DL-YY	0.000	
Factor dead weight	DL-ZZ	0.000	
unfavourable safety factor		1.500	
favourable safety factor		0.000	
Combination coefficient ψ-0		0.750	(rare)
Combination coefficient ψ-1'		0.800	(non frequent)
Combination coefficient ψ-1		0.750	(frequent)
Combination coefficient ψ-2		0.200	(permanent)

Loads

Kind	Referenceto	Projection W[m]	Coordinates X[m]	Y[m]	Z[m]	Type	Loadvalue
Area			0.000	-3.125	0.000	Pz	3.00 [kN/m2]
			38.000	-3.125	0.000		3.00 [kN/m2]
			38.000	1.575	0.000		3.00 [kN/m2]
			0.000	1.575	0.000		3.00 [kN/m2]
	gar	-mult-			activated		100.00 percent

SOFiSTiK AG - www.sofistik.de

Composite bridge 38+50+38, b=14.25m, 2x2HL1100R HISTAR460 , slab 0.30m C30/37
Dead and moving loads

Load Case 19 (Q_1) pedstrian-R

Factor forces and moments		1.000	
Factor dead weight	DL-XX	0.000	
Factor dead weight	DL-YY	0.000	
Factor dead weight	DL-ZZ	0.000	
unfavourable safety factor		1.500	
favourable safety factor		0.000	
Combination coefficient ψ-0		0.750	(rare)
Combination coefficient ψ-1'		0.800	(non frequent)
Combination coefficient ψ-1		0.750	(frequent)
Combination coefficient ψ-2		0.200	(permanent)

Loads

Kind	Referenceto	Projection W[m]	Coordinates X[m]	Y[m]	Z[m]	Type	Loadvalue
Area			0.000	10.175	0.000	Pz	3.00 [kN/m2]
			38.000	10.175	0.000		3.00 [kN/m2]
			38.000	11.125	0.000		3.00 [kN/m2]
			0.000	11.125	0.000		3.00 [kN/m2]
	gar	1900			activated		100.00 percent

Load Case 21 (Q_1) q2.5-lane1-L

Factor forces and moments		1.000	
Factor dead weight	DL-XX	0.000	
Factor dead weight	DL-YY	0.000	
Factor dead weight	DL-ZZ	0.000	
unfavourable safety factor		1.500	
favourable safety factor		0.000	
Combination coefficient ψ-0		0.750	(rare)
Combination coefficient ψ-1'		0.800	(non frequent)
Combination coefficient ψ-1		0.750	(frequent)
Combination coefficient ψ-2		0.200	(permanent)

Loads

Kind	Referenceto	Projection W[m]	Coordinates X[m]	Y[m]	Z[m]	Type	Loadvalue
Area			38.000	1.575	0.000	Pz	2.50 [kN/m2]
			88.000	1.575	0.000		2.50 [kN/m2]
			88.000	4.575	0.000		2.50 [kN/m2]
			38.000	4.575	0.000		2.50 [kN/m2]
	gar	2100			activated		100.00 percent

Load Case 22 (Q_1) q2.5-lane2-L

Factor forces and moments		1.000	
Factor dead weight	DL-XX	0.000	
Factor dead weight	DL-YY	0.000	
Factor dead weight	DL-ZZ	0.000	
unfavourable safety factor		1.500	
favourable safety factor		0.000	
Combination coefficient ψ-0		0.750	(rare)
Combination coefficient ψ-1'		0.800	(non frequent)
Combination coefficient ψ-1		0.750	(frequent)
Combination coefficient ψ-2		0.200	(permanent)

Loads

Kind	Referenceto	Projection W[m]	Coordinates X[m]	Y[m]	Z[m]	Type	Loadvalue
Area			38.000	4.575	0.000	Pz	2.50 [kN/m2]
			88.000	4.575	0.000		2.50 [kN/m2]
			88.000	7.575	0.000		2.50 [kN/m2]
			38.000	7.575	0.000		2.50 [kN/m2]
	gar	2100			activated		100.00 percent

SOFiSTiK AG - www.sofistik.de

Composite bridge 38+50+38, b=14.25m, 2x2HL1100R HISTAR460 , slab 0.30m C30/37
Dead and moving loads

Load Case 24 (Q_1) q2.5-remain-L

Factor forces and moments		1.000	
Factor dead weight	DL-XX	0.000	
Factor dead weight	DL-YY	0.000	
Factor dead weight	DL-ZZ	0.000	
unfavourable safety factor		1.500	
favourable safety factor		0.000	
Combination coefficient ψ-0		0.750	(rare)
Combination coefficient ψ-1'		0.800	(non frequent)
Combination coefficient ψ-1		0.750	(frequent)
Combination coefficient ψ-2		0.200	(permanent)

Loads

Kind	Referenceto	Projection W[m]	Coordinates X[m]	Y[m]	Z[m]	Type	Loadvalue
Area			38.000	7.575	0.000	Pz	2.50 [kN/m2]
			88.000	7.575	0.000		2.50 [kN/m2]
			88.000	10.175	0.000		2.50 [kN/m2]
			38.000	10.175	0.000		2.50 [kN/m2]
	gar -mult-				activated		100.00 percent

Load Case 25 (Q_1) deltaq6.5-lane1-L

Factor forces and moments		1.000	
Factor dead weight	DL-XX	0.000	
Factor dead weight	DL-YY	0.000	
Factor dead weight	DL-ZZ	0.000	
unfavourable safety factor		1.500	
favourable safety factor		0.000	
Combination coefficient ψ-0		0.750	(rare)
Combination coefficient ψ-1'		0.800	(non frequent)
Combination coefficient ψ-1		0.750	(frequent)
Combination coefficient ψ-2		0.200	(permanent)

Loads

Kind	Referenceto	Projection W[m]	Coordinates X[m]	Y[m]	Z[m]	Type	Loadvalue
Area			38.000	1.575	0.000	Pz	6.50 [kN/m2]
			88.000	1.575	0.000		6.50 [kN/m2]
			88.000	4.575	0.000		6.50 [kN/m2]
			38.000	4.575	0.000		6.50 [kN/m2]
	gar 2100				activated		100.00 percent

Load Case 26 (Q_1) deltaq6.5-lane2-L

Factor forces and moments		1.000	
Factor dead weight	DL-XX	0.000	
Factor dead weight	DL-YY	0.000	
Factor dead weight	DL-ZZ	0.000	
unfavourable safety factor		1.500	
favourable safety factor		0.000	
Combination coefficient ψ-0		0.750	(rare)
Combination coefficient ψ-1'		0.800	(non frequent)
Combination coefficient ψ-1		0.750	(frequent)
Combination coefficient ψ-2		0.200	(permanent)

Loads

Kind	Referenceto	Projection W[m]	Coordinates X[m]	Y[m]	Z[m]	Type	Loadvalue
Area			38.000	4.575	0.000	Pz	6.50 [kN/m2]
			88.000	4.575	0.000		6.50 [kN/m2]
			88.000	7.575	0.000		6.50 [kN/m2]
			38.000	7.575	0.000		6.50 [kN/m2]
	gar 2100				activated		100.00 percent

SOFiSTiK AG - www.sofistik.de

Composite bridge 38+50+38, b=14.25m, 2x2HL1100R HISTAR460 , slab 0.30m C30/37
Dead and moving loads

Load Case 28 (Q_1) pedstrian-L

Factor forces and moments		1.000	
Factor dead weight	DL-XX	0.000	
Factor dead weight	DL-YY	0.000	
Factor dead weight	DL-ZZ	0.000	
unfavourable safety factor		1.500	
favourable safety factor		0.000	
Combination coefficient ψ-0		0.750	(rare)
Combination coefficient ψ-1'		0.800	(non frequent)
Combination coefficient ψ-1		0.750	(frequent)
Combination coefficient ψ-2		0.200	(permanent)

Loads

Kind	Referenceto	Projection W[m]	Coordinates X[m]	Y[m]	Z[m]	Type	Loadvalue
Area			38.000	-3.125	0.000	Pz	3.00 [kN/m2]
			88.000	-3.125	0.000		3.00 [kN/m2]
			88.000	1.575	0.000		3.00 [kN/m2]
			38.000	1.575	0.000		3.00 [kN/m2]
	gar -mult-				activated		100.00 percent

Load Case 29 (Q_1) pedstrian-R

Factor forces and moments		1.000	
Factor dead weight	DL-XX	0.000	
Factor dead weight	DL-YY	0.000	
Factor dead weight	DL-ZZ	0.000	
unfavourable safety factor		1.500	
favourable safety factor		0.000	
Combination coefficient ψ-0		0.750	(rare)
Combination coefficient ψ-1'		0.800	(non frequent)
Combination coefficient ψ-1		0.750	(frequent)
Combination coefficient ψ-2		0.200	(permanent)

Loads

Kind	Referenceto	Projection W[m]	Coordinates X[m]	Y[m]	Z[m]	Type	Loadvalue
Area			38.000	10.175	0.000	Pz	3.00 [kN/m2]
			88.000	10.175	0.000		3.00 [kN/m2]
			88.000	11.125	0.000		3.00 [kN/m2]
			38.000	11.125	0.000		3.00 [kN/m2]
	gar 2900				activated		100.00 percent

Load Case 31 (Q_1) q2.5-lane1-L

Factor forces and moments		1.000	
Factor dead weight	DL-XX	0.000	
Factor dead weight	DL-YY	0.000	
Factor dead weight	DL-ZZ	0.000	
unfavourable safety factor		1.500	
favourable safety factor		0.000	
Combination coefficient ψ-0		0.750	(rare)
Combination coefficient ψ-1'		0.800	(non frequent)
Combination coefficient ψ-1		0.750	(frequent)
Combination coefficient ψ-2		0.200	(permanent)

Loads

Kind	Referenceto	Projection W[m]	Coordinates X[m]	Y[m]	Z[m]	Type	Loadvalue
Area			88.000	1.575	0.000	Pz	2.50 [kN/m2]
			126.000	1.575	0.000		2.50 [kN/m2]
			126.000	4.575	0.000		2.50 [kN/m2]
			88.000	4.575	0.000		2.50 [kN/m2]
	gar 3100				activated		100.00 percent

SOFiSTiK AG - www.sofistik.de

Composite bridge 38+50+38, b=14.25m, 2x2HL1100R HISTAR460 , slab 0.30m C30/37
Dead and moving loads

Load Case 32 (Q_1) q2.5-lane2-L

Factor forces and moments		1.000	
Factor dead weight	DL-XX	0.000	
Factor dead weight	DL-YY	0.000	
Factor dead weight	DL-ZZ	0.000	
unfavourable safety factor		1.500	
favourable safety factor		0.000	
Combination coefficient ψ-0		0.750	(rare)
Combination coefficient ψ-1'		0.800	(non frequent)
Combination coefficient ψ-1		0.750	(frequent)
Combination coefficient ψ-2		0.200	(permanent)

Loads

Kind	Referenceto	Projection W[m]	Coordinates X[m]	Y[m]	Z[m]	Type	Loadvalue
Area			88.000	4.575	0.000	Pz	2.50 [kN/m2]
			126.000	4.575	0.000		2.50 [kN/m2]
			126.000	7.575	0.000		2.50 [kN/m2]
			88.000	7.575	0.000		2.50 [kN/m2]
	gar	3100			activated		100.00 percent

Load Case 34 (Q_1) q2.5-remain-L

Factor forces and moments		1.000	
Factor dead weight	DL-XX	0.000	
Factor dead weight	DL-YY	0.000	
Factor dead weight	DL-ZZ	0.000	
unfavourable safety factor		1.500	
favourable safety factor		0.000	
Combination coefficient ψ-0		0.750	(rare)
Combination coefficient ψ-1'		0.800	(non frequent)
Combination coefficient ψ-1		0.750	(frequent)
Combination coefficient ψ-2		0.200	(permanent)

Loads

Kind	Referenceto	Projection W[m]	Coordinates X[m]	Y[m]	Z[m]	Type	Loadvalue
Area			88.000	7.575	0.000	Pz	2.50 [kN/m2]
			126.000	7.575	0.000		2.50 [kN/m2]
			126.000	10.175	0.000		2.50 [kN/m2]
			88.000	10.175	0.000		2.50 [kN/m2]
	gar	-mult-			activated		100.00 percent

Load Case 35 (Q_1) deltaq6.5-lane1-L

Factor forces and moments		1.000	
Factor dead weight	DL-XX	0.000	
Factor dead weight	DL-YY	0.000	
Factor dead weight	DL-ZZ	0.000	
unfavourable safety factor		1.500	
favourable safety factor		0.000	
Combination coefficient ψ-0		0.750	(rare)
Combination coefficient ψ-1'		0.800	(non frequent)
Combination coefficient ψ-1		0.750	(frequent)
Combination coefficient ψ-2		0.200	(permanent)

Loads

Kind	Referenceto	Projection W[m]	Coordinates X[m]	Y[m]	Z[m]	Type	Loadvalue
Area			88.000	1.575	0.000	Pz	6.50 [kN/m2]
			126.000	1.575	0.000		6.50 [kN/m2]
			126.000	4.575	0.000		6.50 [kN/m2]
			88.000	4.575	0.000		6.50 [kN/m2]
	gar	3100			activated		100.00 percent

SOFiSTiK AG - www.sofistik.de

Composite bridge 38+50+38, b=14.25m, 2x2HL1100R HISTAR460 , slab 0.30m C30/37
Dead and moving loads

Load Case 36 (Q_1) deltaq6.5-lane2-L

Factor forces and moments		1.000	
Factor dead weight	DL-XX	0.000	
Factor dead weight	DL-YY	0.000	
Factor dead weight	DL-ZZ	0.000	
unfavourable safety factor		1.500	
favourable safety factor		0.000	
Combination coefficient ψ-0		0.750	(rare)
Combination coefficient ψ-1'		0.800	(non frequent)
Combination coefficient ψ-1		0.750	(frequent)
Combination coefficient ψ-2		0.200	(permanent)

Loads

Kind	Referenceto	Projection W[m]	Coordinates X[m]	Y[m]	Z[m]	Type	Loadvalue
Area			88.000	4.575	0.000	Pz	6.50 [kN/m2]
			126.000	4.575	0.000		6.50 [kN/m2]
			126.000	7.575	0.000		6.50 [kN/m2]
			88.000	7.575	0.000		6.50 [kN/m2]
	gar	3100			activated		100.00 percent

Load Case 38 (Q_1) pedstrian-L

Factor forces and moments		1.000	
Factor dead weight	DL-XX	0.000	
Factor dead weight	DL-YY	0.000	
Factor dead weight	DL-ZZ	0.000	
unfavourable safety factor		1.500	
favourable safety factor		0.000	
Combination coefficient ψ-0		0.750	(rare)
Combination coefficient ψ-1'		0.800	(non frequent)
Combination coefficient ψ-1		0.750	(frequent)
Combination coefficient ψ-2		0.200	(permanent)

Loads

Kind	Referenceto	Projection W[m]	Coordinates X[m]	Y[m]	Z[m]	Type	Loadvalue
Area			88.000	-3.125	0.000	Pz	3.00 [kN/m2]
			126.000	-3.125	0.000		3.00 [kN/m2]
			126.000	1.575	0.000		3.00 [kN/m2]
			88.000	1.575	0.000		3.00 [kN/m2]
	gar	-mult-			activated		100.00 percent

Load Case 39 (Q_1) pedstrian-R

Factor forces and moments		1.000	
Factor dead weight	DL-XX	0.000	
Factor dead weight	DL-YY	0.000	
Factor dead weight	DL-ZZ	0.000	
unfavourable safety factor		1.500	
favourable safety factor		0.000	
Combination coefficient ψ-0		0.750	(rare)
Combination coefficient ψ-1'		0.800	(non frequent)
Combination coefficient ψ-1		0.750	(frequent)
Combination coefficient ψ-2		0.200	(permanent)

Loads

Kind	Referenceto	Projection W[m]	Coordinates X[m]	Y[m]	Z[m]	Type	Loadvalue
Area			88.000	10.175	0.000	Pz	3.00 [kN/m2]
			126.000	10.175	0.000		3.00 [kN/m2]
			126.000	11.125	0.000		3.00 [kN/m2]
			88.000	11.125	0.000		3.00 [kN/m2]
	gar	3900			activated		100.00 percent

SOFiSTiK AG - www.sofistik.de

Composite bridge 38+50+38, b=14.25m, 2x2HL1100R HISTAR460 , slab 0.30m C30/37
Dead and moving loads

Load Case 110 (L_1) K-EN-L

Factor forces and moments		1.000	
Factor dead weight	DL-XX	0.000	
Factor dead weight	DL-YY	0.000	
Factor dead weight	DL-ZZ	0.000	
unfavourable safety factor		1.500	
favourable safety factor		0.000	
Combination coefficient ψ-0		0.750	(rare)
Combination coefficient ψ-1'		0.800	(non frequent)
Combination coefficient ψ-1		0.750	(frequent)
Combination coefficient ψ-2		0.200	(permanent)

Loads

Kind	Referenceto	Projection W[m]	Coordinates X[m]	Y[m]	Z[m]	Type	Loadvalue
Point			-0.600	2.075	0.000	PG	50.0 [kN]
	auto ????		(--)		activated		0.00 percent
Point			0.600	2.075	0.000	PG	50.0 [kN]
	gar 1100				activated		100.00 percent
Point			-0.600	4.075	0.000	PG	50.0 [kN]
	auto ????		(--)		activated		0.00 percent
Point			0.600	4.075	0.000	PG	50.0 [kN]
	gar 1100				activated		100.00 percent

Load Case 111 (L_1) K-EN-L

Factor forces and moments		1.000	
Factor dead weight	DL-XX	0.000	
Factor dead weight	DL-YY	0.000	
Factor dead weight	DL-ZZ	0.000	
unfavourable safety factor		1.500	
favourable safety factor		0.000	
Combination coefficient ψ-0		0.750	(rare)
Combination coefficient ψ-1'		0.800	(non frequent)
Combination coefficient ψ-1		0.750	(frequent)
Combination coefficient ψ-2		0.200	(permanent)

Loads

Kind	Referenceto	Projection W[m]	Coordinates X[m]	Y[m]	Z[m]	Type	Loadvalue
Point			3.622	2.075	0.000	PG	50.0 [kN]
	gar 1100				activated		100.00 percent
Point			4.822	2.075	0.000	PG	50.0 [kN]
	gar 1100				activated		100.00 percent
Point			3.622	4.075	0.000	PG	50.0 [kN]
	gar 1100				activated		100.00 percent
Point			4.822	4.075	0.000	PG	50.0 [kN]
	gar 1100				activated		100.00 percent

Load Case 112 (L_1) K-EN-L

Factor forces and moments		1.000	
Factor dead weight	DL-XX	0.000	
Factor dead weight	DL-YY	0.000	
Factor dead weight	DL-ZZ	0.000	
unfavourable safety factor		1.500	
favourable safety factor		0.000	
Combination coefficient ψ-0		0.750	(rare)
Combination coefficient ψ-1'		0.800	(non frequent)
Combination coefficient ψ-1		0.750	(frequent)
Combination coefficient ψ-2		0.200	(permanent)

Loads

Kind	Referenceto	Projection W[m]	Coordinates X[m]	Y[m]	Z[m]	Type	Loadvalue
Point			7.844	2.075	0.000	PG	50.0 [kN]
	gar 1100				activated		100.00 percent
Point			9.044	2.075	0.000	PG	50.0 [kN]

SOFiSTiK AG - www.sofistik.de

Composite bridge 38+50+38, b=14.25m, 2x2HL1100R HISTAR460 , slab 0.30m C30/37
Dead and moving loads

Loads

Kind	**Referenceto**	**Projection W[m]**	**Coordinates X[m]**	**Y[m]**	**Z[m]**	**Type**	**Loadvalue**
	gar 1100				activated		100.00 percent
Point			7.844	4.075	0.000	PG	50.0 [kN]
	gar 1100				activated		100.00 percent
Point			9.044	4.075	0.000	PG	50.0 [kN]
	gar 1100				activated		100.00 percent

Load Case 113 (L_1) K-EN-L

Factor forces and moments		1.000	
Factor dead weight	DL-XX	0.000	
Factor dead weight	DL-YY	0.000	
Factor dead weight	DL-ZZ	0.000	
unfavourable safety factor		1.500	
favourable safety factor		0.000	
Combination coefficient ψ-0		0.750	(rare)
Combination coefficient ψ-1'		0.800	(non frequent)
Combination coefficient ψ-1		0.750	(frequent)
Combination coefficient ψ-2		0.200	(permanent)

Loads

Kind	**Referenceto**	**Projection W[m]**	**Coordinates X[m]**	**Y[m]**	**Z[m]**	**Type**	**Loadvalue**
Point			12.067	2.075	0.000	PG	50.0 [kN]
	gar 1100				activated		100.00 percent
Point			13.267	2.075	0.000	PG	50.0 [kN]
	gar 1100				activated		100.00 percent
Point			12.067	4.075	0.000	PG	50.0 [kN]
	gar 1100				activated		100.00 percent
Point			13.267	4.075	0.000	PG	50.0 [kN]
	gar 1100				activated		100.00 percent

Load Case 114 (L_1) K-EN-L

Factor forces and moments		1.000	
Factor dead weight	DL-XX	0.000	
Factor dead weight	DL-YY	0.000	
Factor dead weight	DL-ZZ	0.000	
unfavourable safety factor		1.500	
favourable safety factor		0.000	
Combination coefficient ψ-0		0.750	(rare)
Combination coefficient ψ-1'		0.800	(non frequent)
Combination coefficient ψ-1		0.750	(frequent)
Combination coefficient ψ-2		0.200	(permanent)

Loads

Kind	**Referenceto**	**Projection W[m]**	**Coordinates X[m]**	**Y[m]**	**Z[m]**	**Type**	**Loadvalue**
Point			16.289	2.075	0.000	PG	50.0 [kN]
	gar 1100				activated		100.00 percent
Point			17.489	2.075	0.000	PG	50.0 [kN]
	gar 1100				activated		100.00 percent
Point			16.289	4.075	0.000	PG	50.0 [kN]
	gar 1100				activated		100.00 percent
Point			17.489	4.075	0.000	PG	50.0 [kN]
	gar 1100				activated		100.00 percent

SOFiSTiK AG - www.sofistik.de

Composite bridge 38+50+38, b=14.25m, 2x2HL1100R HISTAR460 , slab 0.30m C30/37
Dead and moving loads

Load Case 115 (L_1) K-EN-L

Factor forces and moments		1.000	
Factor dead weight	DL-XX	0.000	
Factor dead weight	DL-YY	0.000	
Factor dead weight	DL-ZZ	0.000	
unfavourable safety factor		1.500	
favourable safety factor		0.000	
Combination coefficient ψ-0		0.750	(rare)
Combination coefficient ψ-1'		0.800	(non frequent)
Combination coefficient ψ-1		0.750	(frequent)
Combination coefficient ψ-2		0.200	(permanent)

Loads

Kind	Referenceto	Projection W[m]	Coordinates X[m]	Y[m]	Z[m]	Type	Loadvalue
Point			20.511	2.075	0.000	PG	50.0 [kN]
	gar	1100			activated		100.00 percent
Point			21.711	2.075	0.000	PG	50.0 [kN]
	gar	1100			activated		100.00 percent
Point			20.511	4.075	0.000	PG	50.0 [kN]
	gar	1100			activated		100.00 percent
Point			21.711	4.075	0.000	PG	50.0 [kN]
	gar	1100			activated		100.00 percent

Load Case 116 (L_1) K-EN-L

Factor forces and moments		1.000	
Factor dead weight	DL-XX	0.000	
Factor dead weight	DL-YY	0.000	
Factor dead weight	DL-ZZ	0.000	
unfavourable safety factor		1.500	
favourable safety factor		0.000	
Combination coefficient ψ-0		0.750	(rare)
Combination coefficient ψ-1'		0.800	(non frequent)
Combination coefficient ψ-1		0.750	(frequent)
Combination coefficient ψ-2		0.200	(permanent)

Loads

Kind	Referenceto	Projection W[m]	Coordinates X[m]	Y[m]	Z[m]	Type	Loadvalue
Point			24.733	2.075	0.000	PG	50.0 [kN]
	gar	1100			activated		100.00 percent
Point			25.933	2.075	0.000	PG	50.0 [kN]
	gar	1100			activated		100.00 percent
Point			24.733	4.075	0.000	PG	50.0 [kN]
	gar	1100			activated		100.00 percent
Point			25.933	4.075	0.000	PG	50.0 [kN]
	gar	1100			activated		100.00 percent

Load Case 117 (L_1) K-EN-L

Factor forces and moments		1.000	
Factor dead weight	DL-XX	0.000	
Factor dead weight	DL-YY	0.000	
Factor dead weight	DL-ZZ	0.000	
unfavourable safety factor		1.500	
favourable safety factor		0.000	
Combination coefficient ψ-0		0.750	(rare)
Combination coefficient ψ-1'		0.800	(non frequent)
Combination coefficient ψ-1		0.750	(frequent)
Combination coefficient ψ-2		0.200	(permanent)

Loads

Kind	Referenceto	Projection W[m]	Coordinates X[m]	Y[m]	Z[m]	Type	Loadvalue
Point			28.956	2.075	0.000	PG	50.0 [kN]
	gar	1100			activated		100.00 percent
Point			30.156	2.075	0.000	PG	50.0 [kN]

SOFiSTiK AG - www.sofistik.de

Composite bridge 38+50+38, b=14.25m, 2x2HL1100R HISTAR460 , slab 0.30m C30/37
Dead and moving loads

Loads

Kind	**Referenceto**	**Projection W[m]**	**Coordinates X[m]**	**Y[m]**	**Z[m]**	**Type**	**Loadvalue**
	gar 1100				activated		100.00 percent
Point			28.956	4.075	0.000	PG	50.0 [kN]
	gar 1100				activated		100.00 percent
Point			30.156	4.075	0.000	PG	50.0 [kN]
	gar 1100				activated		100.00 percent

Load Case 118 (L_1) K-EN-L

Factor forces and moments		1.000	
Factor dead weight	DL-XX	0.000	
Factor dead weight	DL-YY	0.000	
Factor dead weight	DL-ZZ	0.000	
unfavourable safety factor		1.500	
favourable safety factor		0.000	
Combination coefficient ψ-0		0.750	(rare)
Combination coefficient ψ-1'		0.800	(non frequent)
Combination coefficient ψ-1		0.750	(frequent)
Combination coefficient ψ-2		0.200	(permanent)

Loads

Kind	**Referenceto**	**Projection W[m]**	**Coordinates X[m]**	**Y[m]**	**Z[m]**	**Type**	**Loadvalue**
Point			33.178	2.075	0.000	PG	50.0 [kN]
	gar 1100				activated		100.00 percent
Point			34.378	2.075	0.000	PG	50.0 [kN]
	gar 1100				activated		100.00 percent
Point			33.178	4.075	0.000	PG	50.0 [kN]
	gar 1100				activated		100.00 percent
Point			34.378	4.075	0.000	PG	50.0 [kN]
	gar 1100				activated		100.00 percent

Load Case 119 (L_1) K-EN-L

Factor forces and moments		1.000	
Factor dead weight	DL-XX	0.000	
Factor dead weight	DL-YY	0.000	
Factor dead weight	DL-ZZ	0.000	
unfavourable safety factor		1.500	
favourable safety factor		0.000	
Combination coefficient ψ-0		0.750	(rare)
Combination coefficient ψ-1'		0.800	(non frequent)
Combination coefficient ψ-1		0.750	(frequent)
Combination coefficient ψ-2		0.200	(permanent)

Loads

Kind	**Referenceto**	**Projection W[m]**	**Coordinates X[m]**	**Y[m]**	**Z[m]**	**Type**	**Loadvalue**
Point			37.400	2.075	0.000	PG	50.0 [kN]
	gar 1100				activated		100.00 percent
Point			38.600	2.075	0.000	PG	50.0 [kN]
	gar 2100				activated		100.00 percent
Point			37.400	4.075	0.000	PG	50.0 [kN]
	gar 1100				activated		100.00 percent
Point			38.600	4.075	0.000	PG	50.0 [kN]
	gar 2100				activated		100.00 percent

SOFiSTiK AG - www.sofistik.de

Composite bridge 38+50+38, b=14.25m, 2x2HL1100R HISTAR460 , slab 0.30m C30/37
Dead and moving loads

Load Case 120 (L_1) K-EN-L

Factor forces and moments		1.000
Factor dead weight	DL-XX	0.000
Factor dead weight	DL-YY	0.000
Factor dead weight	DL-ZZ	0.000
unfavourable safety factor		1.500
favourable safety factor		0.000
Combination coefficient ψ-0		0.750 (rare)
Combination coefficient ψ-1'		0.800 (non frequent)
Combination coefficient ψ-1		0.750 (frequent)
Combination coefficient ψ-2		0.200 (permanent)

Loads

Kind	Referenceto	Projection W[m]	Coordinates X[m]	Y[m]	Z[m]	Type	Loadvalue
Point			37.400	2.075	0.000	PG	50.0 [kN]
	gar 1100				activated		100.00 percent
Point			38.600	2.075	0.000	PG	50.0 [kN]
	gar 2100				activated		100.00 percent
Point			37.400	4.075	0.000	PG	50.0 [kN]
	gar 1100				activated		100.00 percent
Point			38.600	4.075	0.000	PG	50.0 [kN]
	gar 2100				activated		100.00 percent

Load Case 121 (L_1) K-EN-L

Factor forces and moments		1.000
Factor dead weight	DL-XX	0.000
Factor dead weight	DL-YY	0.000
Factor dead weight	DL-ZZ	0.000
unfavourable safety factor		1.500
favourable safety factor		0.000
Combination coefficient ψ-0		0.750 (rare)
Combination coefficient ψ-1'		0.800 (non frequent)
Combination coefficient ψ-1		0.750 (frequent)
Combination coefficient ψ-2		0.200 (permanent)

Loads

Kind	Referenceto	Projection W[m]	Coordinates X[m]	Y[m]	Z[m]	Type	Loadvalue
Point			42.956	2.075	0.000	PG	50.0 [kN]
	gar 2100				activated		100.00 percent
Point			44.156	2.075	0.000	PG	50.0 [kN]
	gar 2100				activated		100.00 percent
Point			42.956	4.075	0.000	PG	50.0 [kN]
	gar 2100				activated		100.00 percent
Point			44.156	4.075	0.000	PG	50.0 [kN]
	gar 2100				activated		100.00 percent

Load Case 122 (L_1) K-EN-L

Factor forces and moments		1.000
Factor dead weight	DL-XX	0.000
Factor dead weight	DL-YY	0.000
Factor dead weight	DL-ZZ	0.000
unfavourable safety factor		1.500
favourable safety factor		0.000
Combination coefficient ψ-0		0.750 (rare)
Combination coefficient ψ-1'		0.800 (non frequent)
Combination coefficient ψ-1		0.750 (frequent)
Combination coefficient ψ-2		0.200 (permanent)

Loads

Kind	Referenceto	Projection W[m]	Coordinates X[m]	Y[m]	Z[m]	Type	Loadvalue
Point			48.511	2.075	0.000	PG	50.0 [kN]
	gar 2100				activated		100.00 percent
Point			49.711	2.075	0.000	PG	50.0 [kN]

SOFiSTiK AG - www.sofistik.de

Composite bridge 38+50+38, b=14.25m, 2x2HL1100R HISTAR460 , slab 0.30m C30/37
Dead and moving loads

Loads

Kind	Referenceto	Projection W[m]	Coordinates X[m]	Y[m]	Z[m]	Type	Loadvalue
	gar 2100				activated		100.00 percent
Point			48.511	4.075	0.000	PG	50.0 [kN]
	gar 2100				activated		100.00 percent
Point			49.711	4.075	0.000	PG	50.0 [kN]
	gar 2100				activated		100.00 percent

Load Case 123 (L_1) K-EN-L

Factor forces and moments		1.000	
Factor dead weight	DL-XX	0.000	
Factor dead weight	DL-YY	0.000	
Factor dead weight	DL-ZZ	0.000	
unfavourable safety factor		1.500	
favourable safety factor		0.000	
Combination coefficient ψ-0		0.750	(rare)
Combination coefficient ψ-1'		0.800	(non frequent)
Combination coefficient ψ-1		0.750	(frequent)
Combination coefficient ψ-2		0.200	(permanent)

Loads

Kind	Referenceto	Projection W[m]	Coordinates X[m]	Y[m]	Z[m]	Type	Loadvalue
Point			54.067	2.075	0.000	PG	50.0 [kN]
	gar 2100				activated		100.00 percent
Point			55.267	2.075	0.000	PG	50.0 [kN]
	gar 2100				activated		100.00 percent
Point			54.067	4.075	0.000	PG	50.0 [kN]
	gar 2100				activated		100.00 percent
Point			55.267	4.075	0.000	PG	50.0 [kN]
	gar 2100				activated		100.00 percent

Load Case 124 (L_1) K-EN-L

Factor forces and moments		1.000	
Factor dead weight	DL-XX	0.000	
Factor dead weight	DL-YY	0.000	
Factor dead weight	DL-ZZ	0.000	
unfavourable safety factor		1.500	
favourable safety factor		0.000	
Combination coefficient ψ-0		0.750	(rare)
Combination coefficient ψ-1'		0.800	(non frequent)
Combination coefficient ψ-1		0.750	(frequent)
Combination coefficient ψ-2		0.200	(permanent)

Loads

Kind	Referenceto	Projection W[m]	Coordinates X[m]	Y[m]	Z[m]	Type	Loadvalue
Point			59.622	2.075	0.000	PG	50.0 [kN]
	gar 2100				activated		100.00 percent
Point			60.822	2.075	0.000	PG	50.0 [kN]
	gar 2100				activated		100.00 percent
Point			59.622	4.075	0.000	PG	50.0 [kN]
	gar 2100				activated		100.00 percent
Point			60.822	4.075	0.000	PG	50.0 [kN]
	gar 2100				activated		100.00 percent

SOFiSTiK AG - www.sofistik.de

Composite bridge 38+50+38, b=14.25m, 2x2HL1100R HISTAR460 , slab 0.30m C30/37
Dead and moving loads

Load Case 125 (L_1) K-EN-L

Factor forces and moments		1.000
Factor dead weight	DL-XX	0.000
Factor dead weight	DL-YY	0.000
Factor dead weight	DL-ZZ	0.000
unfavourable safety factor		1.500
favourable safety factor		0.000
Combination coefficient ψ-0		0.750 (rare)
Combination coefficient ψ-1'		0.800 (non frequent)
Combination coefficient ψ-1		0.750 (frequent)
Combination coefficient ψ-2		0.200 (permanent)

Loads

Kind	Referenceto	Projection W[m]	Coordinates X[m]	Y[m]	Z[m]	Type	Loadvalue
Point			65.178	2.075	0.000	PG	50.0 [kN]
	gar	2100			activated		100.00 percent
Point			66.378	2.075	0.000	PG	50.0 [kN]
	gar	2100			activated		100.00 percent
Point			65.178	4.075	0.000	PG	50.0 [kN]
	gar	2100			activated		100.00 percent
Point			66.378	4.075	0.000	PG	50.0 [kN]
	gar	2100			activated		100.00 percent

Load Case 126 (L_1) K-EN-L

Factor forces and moments		1.000
Factor dead weight	DL-XX	0.000
Factor dead weight	DL-YY	0.000
Factor dead weight	DL-ZZ	0.000
unfavourable safety factor		1.500
favourable safety factor		0.000
Combination coefficient ψ-0		0.750 (rare)
Combination coefficient ψ-1'		0.800 (non frequent)
Combination coefficient ψ-1		0.750 (frequent)
Combination coefficient ψ-2		0.200 (permanent)

Loads

Kind	Referenceto	Projection W[m]	Coordinates X[m]	Y[m]	Z[m]	Type	Loadvalue
Point			70.733	2.075	0.000	PG	50.0 [kN]
	gar	2100			activated		100.00 percent
Point			71.933	2.075	0.000	PG	50.0 [kN]
	gar	2100			activated		100.00 percent
Point			70.733	4.075	0.000	PG	50.0 [kN]
	gar	2100			activated		100.00 percent
Point			71.933	4.075	0.000	PG	50.0 [kN]
	gar	2100			activated		100.00 percent

Load Case 127 (L_1) K-EN-L

Factor forces and moments		1.000
Factor dead weight	DL-XX	0.000
Factor dead weight	DL-YY	0.000
Factor dead weight	DL-ZZ	0.000
unfavourable safety factor		1.500
favourable safety factor		0.000
Combination coefficient ψ-0		0.750 (rare)
Combination coefficient ψ-1'		0.800 (non frequent)
Combination coefficient ψ-1		0.750 (frequent)
Combination coefficient ψ-2		0.200 (permanent)

Loads

Kind	Referenceto	Projection W[m]	Coordinates X[m]	Y[m]	Z[m]	Type	Loadvalue
Point			76.289	2.075	0.000	PG	50.0 [kN]
	gar	2100			activated		100.00 percent
Point			77.489	2.075	0.000	PG	50.0 [kN]

SOFiSTiK AG - www.sofistik.de

Composite bridge 38+50+38, b=14.25m, 2x2HL1100R HISTAR460 , slab 0.30m C30/37
Dead and moving loads

Loads

Kind	Referenceto	Projection W[m]	Coordinates X[m]	Y[m]	Z[m]	Type	Loadvalue
	gar 2100				activated		100.00 percent
Point			76.289	4.075	0.000	PG	50.0 [kN]
	gar 2100				activated		100.00 percent
Point			77.489	4.075	0.000	PG	50.0 [kN]
	gar 2100				activated		100.00 percent

Load Case 128 (L_1) K-EN-L

Factor forces and moments		1.000	
Factor dead weight	DL-XX	0.000	
Factor dead weight	DL-YY	0.000	
Factor dead weight	DL-ZZ	0.000	
unfavourable safety factor		1.500	
favourable safety factor		0.000	
Combination coefficient ψ-0		0.750	(rare)
Combination coefficient ψ-1'		0.800	(non frequent)
Combination coefficient ψ-1		0.750	(frequent)
Combination coefficient ψ-2		0.200	(permanent)

Loads

Kind	Referenceto	Projection W[m]	Coordinates X[m]	Y[m]	Z[m]	Type	Loadvalue
Point			81.844	2.075	0.000	PG	50.0 [kN]
	gar 2100				activated		100.00 percent
Point			83.044	2.075	0.000	PG	50.0 [kN]
	gar 2100				activated		100.00 percent
Point			81.844	4.075	0.000	PG	50.0 [kN]
	gar 2100				activated		100.00 percent
Point			83.044	4.075	0.000	PG	50.0 [kN]
	gar 2100				activated		100.00 percent

Load Case 129 (L_1) K-EN-L

Factor forces and moments		1.000	
Factor dead weight	DL-XX	0.000	
Factor dead weight	DL-YY	0.000	
Factor dead weight	DL-ZZ	0.000	
unfavourable safety factor		1.500	
favourable safety factor		0.000	
Combination coefficient ψ-0		0.750	(rare)
Combination coefficient ψ-1'		0.800	(non frequent)
Combination coefficient ψ-1		0.750	(frequent)
Combination coefficient ψ-2		0.200	(permanent)

Loads

Kind	Referenceto	Projection W[m]	Coordinates X[m]	Y[m]	Z[m]	Type	Loadvalue
Point			87.400	2.075	0.000	PG	50.0 [kN]
	gar 2100				activated		100.00 percent
Point			88.600	2.075	0.000	PG	50.0 [kN]
	gar 3100				activated		100.00 percent
Point			87.400	4.075	0.000	PG	50.0 [kN]
	gar 2100				activated		100.00 percent
Point			88.600	4.075	0.000	PG	50.0 [kN]
	gar 3100				activated		100.00 percent

SOFiSTiK AG - www.sofistik.de

Composite bridge 38+50+38, b=14.25m, 2x2HL1100R HISTAR460 , slab 0.30m C30/37
Dead and moving loads

Load Case 130 (L_1) K-EN-L

Factor forces and moments		1.000
Factor dead weight	DL-XX	0.000
Factor dead weight	DL-YY	0.000
Factor dead weight	DL-ZZ	0.000
unfavourable safety factor		1.500
favourable safety factor		0.000
Combination coefficient ψ-0		0.750 (rare)
Combination coefficient ψ-1'		0.800 (non frequent)
Combination coefficient ψ-1		0.750 (frequent)
Combination coefficient ψ-2		0.200 (permanent)

Loads

Kind	Referenceto	Projection W[m]	Coordinates X[m]	Y[m]	Z[m]	Type	Loadvalue
Point			87.400	2.075	0.000	PG	50.0 [kN]
	gar	2100			activated		100.00 percent
Point			88.600	2.075	0.000	PG	50.0 [kN]
	gar	3100			activated		100.00 percent
Point			87.400	4.075	0.000	PG	50.0 [kN]
	gar	2100			activated		100.00 percent
Point			88.600	4.075	0.000	PG	50.0 [kN]
	gar	3100			activated		100.00 percent

Load Case 131 (L_1) K-EN-L

Factor forces and moments		1.000
Factor dead weight	DL-XX	0.000
Factor dead weight	DL-YY	0.000
Factor dead weight	DL-ZZ	0.000
unfavourable safety factor		1.500
favourable safety factor		0.000
Combination coefficient ψ-0		0.750 (rare)
Combination coefficient ψ-1'		0.800 (non frequent)
Combination coefficient ψ-1		0.750 (frequent)
Combination coefficient ψ-2		0.200 (permanent)

Loads

Kind	Referenceto	Projection W[m]	Coordinates X[m]	Y[m]	Z[m]	Type	Loadvalue
Point			91.622	2.075	0.000	PG	50.0 [kN]
	gar	3100			activated		100.00 percent
Point			92.822	2.075	0.000	PG	50.0 [kN]
	gar	3100			activated		100.00 percent
Point			91.622	4.075	0.000	PG	50.0 [kN]
	gar	3100			activated		100.00 percent
Point			92.822	4.075	0.000	PG	50.0 [kN]
	gar	3100			activated		100.00 percent

Load Case 132 (L_1) K-EN-L

Factor forces and moments		1.000
Factor dead weight	DL-XX	0.000
Factor dead weight	DL-YY	0.000
Factor dead weight	DL-ZZ	0.000
unfavourable safety factor		1.500
favourable safety factor		0.000
Combination coefficient ψ-0		0.750 (rare)
Combination coefficient ψ-1'		0.800 (non frequent)
Combination coefficient ψ-1		0.750 (frequent)
Combination coefficient ψ-2		0.200 (permanent)

Loads

Kind	Referenceto	Projection W[m]	Coordinates X[m]	Y[m]	Z[m]	Type	Loadvalue
Point			95.844	2.075	0.000	PG	50.0 [kN]
	gar	3100			activated		100.00 percent
Point			97.044	2.075	0.000	PG	50.0 [kN]

SOFiSTiK AG - www.sofistik.de

Composite bridge 38+50+38, b=14.25m, 2x2HL1100R HISTAR460 , slab 0.30m C30/37
Dead and moving loads

Loads

Kind	Referenceto	Projection W[m]	Coordinates X[m]	Y[m]	Z[m]	Type	Loadvalue
	gar 3100				activated		100.00 percent
Point			95.844	4.075	0.000	PG	50.0 [kN]
	gar 3100				activated		100.00 percent
Point			97.044	4.075	0.000	PG	50.0 [kN]
	gar 3100				activated		100.00 percent

Load Case 133 (L_1) K-EN-L

Factor forces and moments		1.000	
Factor dead weight	DL-XX	0.000	
Factor dead weight	DL-YY	0.000	
Factor dead weight	DL-ZZ	0.000	
unfavourable safety factor		1.500	
favourable safety factor		0.000	
Combination coefficient ψ-0		0.750	(rare)
Combination coefficient ψ-1'		0.800	(non frequent)
Combination coefficient ψ-1		0.750	(frequent)
Combination coefficient ψ-2		0.200	(permanent)

Loads

Kind	Referenceto	Projection W[m]	Coordinates X[m]	Y[m]	Z[m]	Type	Loadvalue
Point			100.067	2.075	0.000	PG	50.0 [kN]
	gar 3100				activated		100.00 percent
Point			101.267	2.075	0.000	PG	50.0 [kN]
	gar 3100				activated		100.00 percent
Point			100.067	4.075	0.000	PG	50.0 [kN]
	gar 3100				activated		100.00 percent
Point			101.267	4.075	0.000	PG	50.0 [kN]
	gar 3100				activated		100.00 percent

Load Case 134 (L_1) K-EN-L

Factor forces and moments		1.000	
Factor dead weight	DL-XX	0.000	
Factor dead weight	DL-YY	0.000	
Factor dead weight	DL-ZZ	0.000	
unfavourable safety factor		1.500	
favourable safety factor		0.000	
Combination coefficient ψ-0		0.750	(rare)
Combination coefficient ψ-1'		0.800	(non frequent)
Combination coefficient ψ-1		0.750	(frequent)
Combination coefficient ψ-2		0.200	(permanent)

Loads

Kind	Referenceto	Projection W[m]	Coordinates X[m]	Y[m]	Z[m]	Type	Loadvalue
Point			104.289	2.075	0.000	PG	50.0 [kN]
	gar 3100				activated		100.00 percent
Point			105.489	2.075	0.000	PG	50.0 [kN]
	gar 3100				activated		100.00 percent
Point			104.289	4.075	0.000	PG	50.0 [kN]
	gar 3100				activated		100.00 percent
Point			105.489	4.075	0.000	PG	50.0 [kN]
	gar 3100				activated		100.00 percent

SOFiSTiK AG - www.sofistik.de

Composite bridge 38+50+38, b=14.25m, 2x2HL1100R HISTAR460 , slab 0.30m C30/37
Dead and moving loads

Load Case 135 (L_1) K-EN-L

Factor forces and moments		1.000
Factor dead weight	DL-XX	0.000
Factor dead weight	DL-YY	0.000
Factor dead weight	DL-ZZ	0.000
unfavourable safety factor		1.500
favourable safety factor		0.000
Combination coefficient ψ-0		0.750 (rare)
Combination coefficient ψ-1'		0.800 (non frequent)
Combination coefficient ψ-1		0.750 (frequent)
Combination coefficient ψ-2		0.200 (permanent)

Loads

Kind	Referenceto	Projection W[m]	Coordinates X[m]	Y[m]	Z[m]	Type	Loadvalue
Point			108.511	2.075	0.000	PG	50.0 [kN]
	gar	3100			activated		100.00 percent
Point			109.711	2.075	0.000	PG	50.0 [kN]
	gar	3100			activated		100.00 percent
Point			108.511	4.075	0.000	PG	50.0 [kN]
	gar	3100			activated		100.00 percent
Point			109.711	4.075	0.000	PG	50.0 [kN]
	gar	3100			activated		100.00 percent

Load Case 136 (L_1) K-EN-L

Factor forces and moments		1.000
Factor dead weight	DL-XX	0.000
Factor dead weight	DL-YY	0.000
Factor dead weight	DL-ZZ	0.000
unfavourable safety factor		1.500
favourable safety factor		0.000
Combination coefficient ψ-0		0.750 (rare)
Combination coefficient ψ-1'		0.800 (non frequent)
Combination coefficient ψ-1		0.750 (frequent)
Combination coefficient ψ-2		0.200 (permanent)

Loads

Kind	Referenceto	Projection W[m]	Coordinates X[m]	Y[m]	Z[m]	Type	Loadvalue
Point			112.733	2.075	0.000	PG	50.0 [kN]
	gar	3100			activated		100.00 percent
Point			113.933	2.075	0.000	PG	50.0 [kN]
	gar	3100			activated		100.00 percent
Point			112.733	4.075	0.000	PG	50.0 [kN]
	gar	3100			activated		100.00 percent
Point			113.933	4.075	0.000	PG	50.0 [kN]
	gar	3100			activated		100.00 percent

Load Case 137 (L_1) K-EN-L

Factor forces and moments		1.000
Factor dead weight	DL-XX	0.000
Factor dead weight	DL-YY	0.000
Factor dead weight	DL-ZZ	0.000
unfavourable safety factor		1.500
favourable safety factor		0.000
Combination coefficient ψ-0		0.750 (rare)
Combination coefficient ψ-1'		0.800 (non frequent)
Combination coefficient ψ-1		0.750 (frequent)
Combination coefficient ψ-2		0.200 (permanent)

Loads

Kind	Referenceto	Projection W[m]	Coordinates X[m]	Y[m]	Z[m]	Type	Loadvalue
Point			116.956	2.075	0.000	PG	50.0 [kN]
	gar	3100			activated		100.00 percent
Point			118.156	2.075	0.000	PG	50.0 [kN]

SOFiSTiK AG - www.sofistik.de

Composite bridge 38+50+38, b=14.25m, 2x2HL1100R HISTAR460 , slab 0.30m C30/37
Dead and moving loads

Loads

Kind	Referenceto	Projection W[m]	Coordinates X[m]	Y[m]	Z[m]	Type	Loadvalue
	gar 3100			activated			100.00 percent
Point			116.956	4.075	0.000	PG	50.0 [kN]
	gar 3100			activated			100.00 percent
Point			118.156	4.075	0.000	PG	50.0 [kN]
	gar 3100			activated			100.00 percent

Load Case 138 (L_1) K-EN-L

Factor forces and moments		1.000	
Factor dead weight	DL-XX	0.000	
Factor dead weight	DL-YY	0.000	
Factor dead weight	DL-ZZ	0.000	
unfavourable safety factor		1.500	
favourable safety factor		0.000	
Combination coefficient ψ-0		0.750	(rare)
Combination coefficient ψ-1'		0.800	(non frequent)
Combination coefficient ψ-1		0.750	(frequent)
Combination coefficient ψ-2		0.200	(permanent)

Loads

Kind	Referenceto	Projection W[m]	Coordinates X[m]	Y[m]	Z[m]	Type	Loadvalue
Point			121.178	2.075	0.000	PG	50.0 [kN]
	gar 3100			activated			100.00 percent
Point			122.378	2.075	0.000	PG	50.0 [kN]
	gar 3100			activated			100.00 percent
Point			121.178	4.075	0.000	PG	50.0 [kN]
	gar 3100			activated			100.00 percent
Point			122.378	4.075	0.000	PG	50.0 [kN]
	gar 3100			activated			100.00 percent

Load Case 139 (L_1) K-EN-L

Factor forces and moments		1.000	
Factor dead weight	DL-XX	0.000	
Factor dead weight	DL-YY	0.000	
Factor dead weight	DL-ZZ	0.000	
unfavourable safety factor		1.500	
favourable safety factor		0.000	
Combination coefficient ψ-0		0.750	(rare)
Combination coefficient ψ-1'		0.800	(non frequent)
Combination coefficient ψ-1		0.750	(frequent)
Combination coefficient ψ-2		0.200	(permanent)

Loads

Kind	Referenceto	Projection W[m]	Coordinates X[m]	Y[m]	Z[m]	Type	Loadvalue
Point			125.400	2.075	0.000	PG	50.0 [kN]
	gar 3100			activated			100.00 percent
Point			126.600	2.075	0.000	PG	50.0 [kN]
	auto ????		(--)	activated			0.00 percent
Point			125.400	4.075	0.000	PG	50.0 [kN]
	gar 3100			activated			100.00 percent
Point			126.600	4.075	0.000	PG	50.0 [kN]
	auto ????		(--)	activated			0.00 percent

SOFiSTiK AG - www.sofistik.de

Composite bridge 38+50+38, b=14.25m, 2x2HL1100R HISTAR460 , slab 0.30m C30/37
Dead and moving loads

Load Case 210 (L_1) K-EN-L

Factor forces and moments		1.000	
Factor dead weight	DL-XX	0.000	
Factor dead weight	DL-YY	0.000	
Factor dead weight	DL-ZZ	0.000	
unfavourable safety factor		1.500	
favourable safety factor		0.000	
Combination coefficient ψ-0		0.750	(rare)
Combination coefficient ψ-1'		0.800	(non frequent)
Combination coefficient ψ-1		0.750	(frequent)
Combination coefficient ψ-2		0.200	(permanent)

Loads

Kind	Referenceto	Projection W[m]	Coordinates X[m]	Y[m]	Z[m]	Type	Loadvalue
Point			-0.600	5.075	0.000	PG	50.0 [kN]
	auto ????		(--)		activated		0.00 percent
Point			0.600	5.075	0.000	PG	50.0 [kN]
	gar 1100				activated		100.00 percent
Point			-0.600	7.075	0.000	PG	50.0 [kN]
	auto ????		(--)		activated		0.00 percent
Point			0.600	7.075	0.000	PG	50.0 [kN]
	gar 1100				activated		100.00 percent

Load Case 211 (L_1) K-EN-L

Factor forces and moments		1.000	
Factor dead weight	DL-XX	0.000	
Factor dead weight	DL-YY	0.000	
Factor dead weight	DL-ZZ	0.000	
unfavourable safety factor		1.500	
favourable safety factor		0.000	
Combination coefficient ψ-0		0.750	(rare)
Combination coefficient ψ-1'		0.800	(non frequent)
Combination coefficient ψ-1		0.750	(frequent)
Combination coefficient ψ-2		0.200	(permanent)

Loads

Kind	Referenceto	Projection W[m]	Coordinates X[m]	Y[m]	Z[m]	Type	Loadvalue
Point			3.622	5.075	0.000	PG	50.0 [kN]
	gar 1100				activated		100.00 percent
Point			4.822	5.075	0.000	PG	50.0 [kN]
	gar 1100				activated		100.00 percent
Point			3.622	7.075	0.000	PG	50.0 [kN]
	gar 1100				activated		100.00 percent
Point			4.822	7.075	0.000	PG	50.0 [kN]
	gar 1100				activated		100.00 percent

Load Case 212 (L_1) K-EN-L

Factor forces and moments		1.000	
Factor dead weight	DL-XX	0.000	
Factor dead weight	DL-YY	0.000	
Factor dead weight	DL-ZZ	0.000	
unfavourable safety factor		1.500	
favourable safety factor		0.000	
Combination coefficient ψ-0		0.750	(rare)
Combination coefficient ψ-1'		0.800	(non frequent)
Combination coefficient ψ-1		0.750	(frequent)
Combination coefficient ψ-2		0.200	(permanent)

Loads

Kind	Referenceto	Projection W[m]	Coordinates X[m]	Y[m]	Z[m]	Type	Loadvalue
Point			7.844	5.075	0.000	PG	50.0 [kN]
	gar 1100				activated		100.00 percent
Point			9.044	5.075	0.000	PG	50.0 [kN]

SOFiSTiK AG - www.sofistik.de

Composite bridge 38+50+38, b=14.25m, 2x2HL1100R HISTAR460 , slab 0.30m C30/37
Dead and moving loads

Loads

Kind	Referenceto	Projection W[m]	Coordinates X[m]	Y[m]	Z[m]	Type	Loadvalue
	gar 1100				activated		100.00 percent
Point			7.844	7.075	0.000	PG	50.0 [kN]
	gar 1100				activated		100.00 percent
Point			9.044	7.075	0.000	PG	50.0 [kN]
	gar 1100				activated		100.00 percent

Load Case 213 (L_1) K-EN-L

Factor forces and moments		1.000	
Factor dead weight	DL-XX	0.000	
Factor dead weight	DL-YY	0.000	
Factor dead weight	DL-ZZ	0.000	
unfavourable safety factor		1.500	
favourable safety factor		0.000	
Combination coefficient ψ-0		0.750	(rare)
Combination coefficient ψ-1'		0.800	(non frequent)
Combination coefficient ψ-1		0.750	(frequent)
Combination coefficient ψ-2		0.200	(permanent)

Loads

Kind	Referenceto	Projection W[m]	Coordinates X[m]	Y[m]	Z[m]	Type	Loadvalue
Point			12.067	5.075	0.000	PG	50.0 [kN]
	gar 1100				activated		100.00 percent
Point			13.267	5.075	0.000	PG	50.0 [kN]
	gar 1100				activated		100.00 percent
Point			12.067	7.075	0.000	PG	50.0 [kN]
	gar 1100				activated		100.00 percent
Point			13.267	7.075	0.000	PG	50.0 [kN]
	gar 1100				activated		100.00 percent

Load Case 214 (L_1) K-EN-L

Factor forces and moments		1.000	
Factor dead weight	DL-XX	0.000	
Factor dead weight	DL-YY	0.000	
Factor dead weight	DL-ZZ	0.000	
unfavourable safety factor		1.500	
favourable safety factor		0.000	
Combination coefficient ψ-0		0.750	(rare)
Combination coefficient ψ-1'		0.800	(non frequent)
Combination coefficient ψ-1		0.750	(frequent)
Combination coefficient ψ-2		0.200	(permanent)

Loads

Kind	Referenceto	Projection W[m]	Coordinates X[m]	Y[m]	Z[m]	Type	Loadvalue
Point			16.289	5.075	0.000	PG	50.0 [kN]
	gar 1100				activated		100.00 percent
Point			17.489	5.075	0.000	PG	50.0 [kN]
	gar 1100				activated		100.00 percent
Point			16.289	7.075	0.000	PG	50.0 [kN]
	gar 1100				activated		100.00 percent
Point			17.489	7.075	0.000	PG	50.0 [kN]
	gar 1100				activated		100.00 percent

SOFiSTiK AG - www.sofistik.de

Composite bridge 38+50+38, b=14.25m, 2x2HL1100R HISTAR460 , slab 0.30m C30/37
Dead and moving loads

Load Case 215 (L_1) K-EN-L

Factor forces and moments		1.000
Factor dead weight	DL-XX	0.000
Factor dead weight	DL-YY	0.000
Factor dead weight	DL-ZZ	0.000
unfavourable safety factor		1.500
favourable safety factor		0.000
Combination coefficient ψ-0		0.750 (rare)
Combination coefficient ψ-1'		0.800 (non frequent)
Combination coefficient ψ-1		0.750 (frequent)
Combination coefficient ψ-2		0.200 (permanent)

Loads

Kind	Referenceto	Projection W[m]	Coordinates X[m]	Y[m]	Z[m]	Type	Loadvalue
Point			20.511	5.075	0.000	PG	50.0 [kN]
	gar	1100			activated		100.00 percent
Point			21.711	5.075	0.000	PG	50.0 [kN]
	gar	1100			activated		100.00 percent
Point			20.511	7.075	0.000	PG	50.0 [kN]
	gar	1100			activated		100.00 percent
Point			21.711	7.075	0.000	PG	50.0 [kN]
	gar	1100			activated		100.00 percent

Load Case 216 (L_1) K-EN-L

Factor forces and moments		1.000
Factor dead weight	DL-XX	0.000
Factor dead weight	DL-YY	0.000
Factor dead weight	DL-ZZ	0.000
unfavourable safety factor		1.500
favourable safety factor		0.000
Combination coefficient ψ-0		0.750 (rare)
Combination coefficient ψ-1'		0.800 (non frequent)
Combination coefficient ψ-1		0.750 (frequent)
Combination coefficient ψ-2		0.200 (permanent)

Loads

Kind	Referenceto	Projection W[m]	Coordinates X[m]	Y[m]	Z[m]	Type	Loadvalue
Point			24.733	5.075	0.000	PG	50.0 [kN]
	gar	1100			activated		100.00 percent
Point			25.933	5.075	0.000	PG	50.0 [kN]
	gar	1100			activated		100.00 percent
Point			24.733	7.075	0.000	PG	50.0 [kN]
	gar	1100			activated		100.00 percent
Point			25.933	7.075	0.000	PG	50.0 [kN]
	gar	1100			activated		100.00 percent

Load Case 217 (L_1) K-EN-L

Factor forces and moments		1.000
Factor dead weight	DL-XX	0.000
Factor dead weight	DL-YY	0.000
Factor dead weight	DL-ZZ	0.000
unfavourable safety factor		1.500
favourable safety factor		0.000
Combination coefficient ψ-0		0.750 (rare)
Combination coefficient ψ-1'		0.800 (non frequent)
Combination coefficient ψ-1		0.750 (frequent)
Combination coefficient ψ-2		0.200 (permanent)

Loads

Kind	Referenceto	Projection W[m]	Coordinates X[m]	Y[m]	Z[m]	Type	Loadvalue
Point			28.956	5.075	0.000	PG	50.0 [kN]
	gar	1100			activated		100.00 percent
Point			30.156	5.075	0.000	PG	50.0 [kN]

SOFiSTiK AG - www.sofistik.de

Composite bridge 38+50+38, b=14.25m, 2x2HL1100R HISTAR460 , slab 0.30m C30/37
Dead and moving loads

Loads

Kind	**Referenceto**	**Projection W[m]**	**Coordinates X[m]**	**Y[m]**	**Z[m]**	**Type**	**Loadvalue**
	gar 1100				activated		100.00 percent
Point			28.956	7.075	0.000	PG	50.0 [kN]
	gar 1100				activated		100.00 percent
Point			30.156	7.075	0.000	PG	50.0 [kN]
	gar 1100				activated		100.00 percent

Load Case 218 (L_1) K-EN-L

Factor forces and moments		1.000	
Factor dead weight	DL-XX	0.000	
Factor dead weight	DL-YY	0.000	
Factor dead weight	DL-ZZ	0.000	
unfavourable safety factor		1.500	
favourable safety factor		0.000	
Combination coefficient ψ-0		0.750	(rare)
Combination coefficient ψ-1'		0.800	(non frequent)
Combination coefficient ψ-1		0.750	(frequent)
Combination coefficient ψ-2		0.200	(permanent)

Loads

Kind	**Referenceto**	**Projection W[m]**	**Coordinates X[m]**	**Y[m]**	**Z[m]**	**Type**	**Loadvalue**
Point			33.178	5.075	0.000	PG	50.0 [kN]
	gar 1100				activated		100.00 percent
Point			34.378	5.075	0.000	PG	50.0 [kN]
	gar 1100				activated		100.00 percent
Point			33.178	7.075	0.000	PG	50.0 [kN]
	gar 1100				activated		100.00 percent
Point			34.378	7.075	0.000	PG	50.0 [kN]
	gar 1100				activated		100.00 percent

Load Case 219 (L_1) K-EN-L

Factor forces and moments		1.000	
Factor dead weight	DL-XX	0.000	
Factor dead weight	DL-YY	0.000	
Factor dead weight	DL-ZZ	0.000	
unfavourable safety factor		1.500	
favourable safety factor		0.000	
Combination coefficient ψ-0		0.750	(rare)
Combination coefficient ψ-1'		0.800	(non frequent)
Combination coefficient ψ-1		0.750	(frequent)
Combination coefficient ψ-2		0.200	(permanent)

Loads

Kind	**Referenceto**	**Projection W[m]**	**Coordinates X[m]**	**Y[m]**	**Z[m]**	**Type**	**Loadvalue**
Point			37.400	5.075	0.000	PG	50.0 [kN]
	gar 1100				activated		100.00 percent
Point			38.600	5.075	0.000	PG	50.0 [kN]
	gar 2100				activated		100.00 percent
Point			37.400	7.075	0.000	PG	50.0 [kN]
	gar 1100				activated		100.00 percent
Point			38.600	7.075	0.000	PG	50.0 [kN]
	gar 2100				activated		100.00 percent

SOFiSTiK AG - www.sofistik.de

Composite bridge 38+50+38, b=14.25m, 2x2HL1100R HISTAR460 , slab 0.30m C30/37
Dead and moving loads

Load Case 220 (L_1) K-EN-L

Factor forces and moments		1.000
Factor dead weight	DL-XX	0.000
Factor dead weight	DL-YY	0.000
Factor dead weight	DL-ZZ	0.000
unfavourable safety factor		1.500
favourable safety factor		0.000
Combination coefficient ψ-0		0.750 (rare)
Combination coefficient ψ-1'		0.800 (non frequent)
Combination coefficient ψ-1		0.750 (frequent)
Combination coefficient ψ-2		0.200 (permanent)

Loads

Kind	Referenceto	Projection W[m]	Coordinates X[m]	Y[m]	Z[m]	Type	Loadvalue
Point			37.400	5.075	0.000	PG	50.0 [kN]
	gar 1100				activated		100.00 percent
Point			38.600	5.075	0.000	PG	50.0 [kN]
	gar 2100				activated		100.00 percent
Point			37.400	7.075	0.000	PG	50.0 [kN]
	gar 1100				activated		100.00 percent
Point			38.600	7.075	0.000	PG	50.0 [kN]
	gar 2100				activated		100.00 percent

Load Case 221 (L_1) K-EN-L

Factor forces and moments		1.000
Factor dead weight	DL-XX	0.000
Factor dead weight	DL-YY	0.000
Factor dead weight	DL-ZZ	0.000
unfavourable safety factor		1.500
favourable safety factor		0.000
Combination coefficient ψ-0		0.750 (rare)
Combination coefficient ψ-1'		0.800 (non frequent)
Combination coefficient ψ-1		0.750 (frequent)
Combination coefficient ψ-2		0.200 (permanent)

Loads

Kind	Referenceto	Projection W[m]	Coordinates X[m]	Y[m]	Z[m]	Type	Loadvalue
Point			42.956	5.075	0.000	PG	50.0 [kN]
	gar 2100				activated		100.00 percent
Point			44.156	5.075	0.000	PG	50.0 [kN]
	gar 2100				activated		100.00 percent
Point			42.956	7.075	0.000	PG	50.0 [kN]
	gar 2100				activated		100.00 percent
Point			44.156	7.075	0.000	PG	50.0 [kN]
	gar 2100				activated		100.00 percent

Load Case 222 (L_1) K-EN-L

Factor forces and moments		1.000
Factor dead weight	DL-XX	0.000
Factor dead weight	DL-YY	0.000
Factor dead weight	DL-ZZ	0.000
unfavourable safety factor		1.500
favourable safety factor		0.000
Combination coefficient ψ-0		0.750 (rare)
Combination coefficient ψ-1'		0.800 (non frequent)
Combination coefficient ψ-1		0.750 (frequent)
Combination coefficient ψ-2		0.200 (permanent)

Loads

Kind	Referenceto	Projection W[m]	Coordinates X[m]	Y[m]	Z[m]	Type	Loadvalue
Point			48.511	5.075	0.000	PG	50.0 [kN]
	gar 2100				activated		100.00 percent
Point			49.711	5.075	0.000	PG	50.0 [kN]

SOFiSTiK AG - www.sofistik.de

Composite bridge 38+50+38, b=14.25m, 2x2HL1100R HISTAR460 , slab 0.30m C30/37
Dead and moving loads

Loads

Kind	Referenceto	Projection W[m]	Coordinates X[m]	Y[m]	Z[m]	Type	Loadvalue
	gar 2100				activated		100.00 percent
Point			48.511	7.075	0.000	PG	50.0 [kN]
	gar 2100				activated		100.00 percent
Point			49.711	7.075	0.000	PG	50.0 [kN]
	gar 2100				activated		100.00 percent

Load Case 223 (L_1) K-EN-L

Factor forces and moments		1.000	
Factor dead weight	DL-XX	0.000	
Factor dead weight	DL-YY	0.000	
Factor dead weight	DL-ZZ	0.000	
unfavourable safety factor		1.500	
favourable safety factor		0.000	
Combination coefficient ψ-0		0.750	(rare)
Combination coefficient ψ-1'		0.800	(non frequent)
Combination coefficient ψ-1		0.750	(frequent)
Combination coefficient ψ-2		0.200	(permanent)

Loads

Kind	Referenceto	Projection W[m]	Coordinates X[m]	Y[m]	Z[m]	Type	Loadvalue
Point			54.067	5.075	0.000	PG	50.0 [kN]
	gar 2100				activated		100.00 percent
Point			55.267	5.075	0.000	PG	50.0 [kN]
	gar 2100				activated		100.00 percent
Point			54.067	7.075	0.000	PG	50.0 [kN]
	gar 2100				activated		100.00 percent
Point			55.267	7.075	0.000	PG	50.0 [kN]
	gar 2100				activated		100.00 percent

Load Case 224 (L_1) K-EN-L

Factor forces and moments		1.000	
Factor dead weight	DL-XX	0.000	
Factor dead weight	DL-YY	0.000	
Factor dead weight	DL-ZZ	0.000	
unfavourable safety factor		1.500	
favourable safety factor		0.000	
Combination coefficient ψ-0		0.750	(rare)
Combination coefficient ψ-1'		0.800	(non frequent)
Combination coefficient ψ-1		0.750	(frequent)
Combination coefficient ψ-2		0.200	(permanent)

Loads

Kind	Referenceto	Projection W[m]	Coordinates X[m]	Y[m]	Z[m]	Type	Loadvalue
Point			59.622	5.075	0.000	PG	50.0 [kN]
	gar 2100				activated		100.00 percent
Point			60.822	5.075	0.000	PG	50.0 [kN]
	gar 2100				activated		100.00 percent
Point			59.622	7.075	0.000	PG	50.0 [kN]
	gar 2100				activated		100.00 percent
Point			60.822	7.075	0.000	PG	50.0 [kN]
	gar 2100				activated		100.00 percent

SOFiSTiK AG - www.sofistik.de

Composite bridge 38+50+38, b=14.25m, 2x2HL1100R HISTAR460 , slab 0.30m C30/37
Dead and moving loads

Load Case 225 (L_1) K-EN-L

Factor forces and moments		1.000
Factor dead weight	DL-XX	0.000
Factor dead weight	DL-YY	0.000
Factor dead weight	DL-ZZ	0.000
unfavourable safety factor		1.500
favourable safety factor		0.000
Combination coefficient ψ-0		0.750 (rare)
Combination coefficient ψ-1'		0.800 (non frequent)
Combination coefficient ψ-1		0.750 (frequent)
Combination coefficient ψ-2		0.200 (permanent)

Loads

Kind	Referenceto	Projection W[m]	Coordinates X[m]	Y[m]	Z[m]	Type	Loadvalue
Point			65.178	5.075	0.000	PG	50.0 [kN]
	gar	2100			activated		100.00 percent
Point			66.378	5.075	0.000	PG	50.0 [kN]
	gar	2100			activated		100.00 percent
Point			65.178	7.075	0.000	PG	50.0 [kN]
	gar	2100			activated		100.00 percent
Point			66.378	7.075	0.000	PG	50.0 [kN]
	gar	2100			activated		100.00 percent

Load Case 226 (L_1) K-EN-L

Factor forces and moments		1.000
Factor dead weight	DL-XX	0.000
Factor dead weight	DL-YY	0.000
Factor dead weight	DL-ZZ	0.000
unfavourable safety factor		1.500
favourable safety factor		0.000
Combination coefficient ψ-0		0.750 (rare)
Combination coefficient ψ-1'		0.800 (non frequent)
Combination coefficient ψ-1		0.750 (frequent)
Combination coefficient ψ-2		0.200 (permanent)

Loads

Kind	Referenceto	Projection W[m]	Coordinates X[m]	Y[m]	Z[m]	Type	Loadvalue
Point			70.733	5.075	0.000	PG	50.0 [kN]
	gar	2100			activated		100.00 percent
Point			71.933	5.075	0.000	PG	50.0 [kN]
	gar	2100			activated		100.00 percent
Point			70.733	7.075	0.000	PG	50.0 [kN]
	gar	2100			activated		100.00 percent
Point			71.933	7.075	0.000	PG	50.0 [kN]
	gar	2100			activated		100.00 percent

Load Case 227 (L_1) K-EN-L

Factor forces and moments		1.000
Factor dead weight	DL-XX	0.000
Factor dead weight	DL-YY	0.000
Factor dead weight	DL-ZZ	0.000
unfavourable safety factor		1.500
favourable safety factor		0.000
Combination coefficient ψ-0		0.750 (rare)
Combination coefficient ψ-1'		0.800 (non frequent)
Combination coefficient ψ-1		0.750 (frequent)
Combination coefficient ψ-2		0.200 (permanent)

Loads

Kind	Referenceto	Projection W[m]	Coordinates X[m]	Y[m]	Z[m]	Type	Loadvalue
Point			76.289	5.075	0.000	PG	50.0 [kN]
	gar	2100			activated		100.00 percent
Point			77.489	5.075	0.000	PG	50.0 [kN]

SOFiSTiK AG - www.sofistik.de

Composite bridge 38+50+38, b=14.25m, 2x2HL1100R HISTAR460 , slab 0.30m C30/37
Dead and moving loads

Loads

Kind	**Referenceto**	**Projection W[m]**	**Coordinates X[m]**	**Y[m]**	**Z[m]**	**Type**	**Loadvalue**
	gar 2100				activated		100.00 percent
Point			76.289	7.075	0.000	PG	50.0 [kN]
	gar 2100				activated		100.00 percent
Point			77.489	7.075	0.000	PG	50.0 [kN]
	gar 2100				activated		100.00 percent

Load Case 228 (L_1) K-EN-L

Factor forces and moments		1.000	
Factor dead weight	DL-XX	0.000	
Factor dead weight	DL-YY	0.000	
Factor dead weight	DL-ZZ	0.000	
unfavourable safety factor		1.500	
favourable safety factor		0.000	
Combination coefficient ψ-0		0.750	(rare)
Combination coefficient ψ-1'		0.800	(non frequent)
Combination coefficient ψ-1		0.750	(frequent)
Combination coefficient ψ-2		0.200	(permanent)

Loads

Kind	**Referenceto**	**Projection W[m]**	**Coordinates X[m]**	**Y[m]**	**Z[m]**	**Type**	**Loadvalue**
Point			81.844	5.075	0.000	PG	50.0 [kN]
	gar 2100				activated		100.00 percent
Point			83.044	5.075	0.000	PG	50.0 [kN]
	gar 2100				activated		100.00 percent
Point			81.844	7.075	0.000	PG	50.0 [kN]
	gar 2100				activated		100.00 percent
Point			83.044	7.075	0.000	PG	50.0 [kN]
	gar 2100				activated		100.00 percent

Load Case 229 (L_1) K-EN-L

Factor forces and moments		1.000	
Factor dead weight	DL-XX	0.000	
Factor dead weight	DL-YY	0.000	
Factor dead weight	DL-ZZ	0.000	
unfavourable safety factor		1.500	
favourable safety factor		0.000	
Combination coefficient ψ-0		0.750	(rare)
Combination coefficient ψ-1'		0.800	(non frequent)
Combination coefficient ψ-1		0.750	(frequent)
Combination coefficient ψ-2		0.200	(permanent)

Loads

Kind	**Referenceto**	**Projection W[m]**	**Coordinates X[m]**	**Y[m]**	**Z[m]**	**Type**	**Loadvalue**
Point			87.400	5.075	0.000	PG	50.0 [kN]
	gar 2100				activated		100.00 percent
Point			88.600	5.075	0.000	PG	50.0 [kN]
	gar 3100				activated		100.00 percent
Point			87.400	7.075	0.000	PG	50.0 [kN]
	gar 2100				activated		100.00 percent
Point			88.600	7.075	0.000	PG	50.0 [kN]
	gar 3100				activated		100.00 percent

SOFiSTiK AG - www.sofistik.de

Composite bridge 38+50+38, b=14.25m, 2x2HL1100R HISTAR460 , slab 0.30m C30/37
Dead and moving loads

Load Case 230 (L_1) K-EN-L

Factor forces and moments		1.000
Factor dead weight	DL-XX	0.000
Factor dead weight	DL-YY	0.000
Factor dead weight	DL-ZZ	0.000
unfavourable safety factor		1.500
favourable safety factor		0.000
Combination coefficient ψ-0		0.750 (rare)
Combination coefficient ψ-1'		0.800 (non frequent)
Combination coefficient ψ-1		0.750 (frequent)
Combination coefficient ψ-2		0.200 (permanent)

Loads

Kind	Referenceto	Projection W[m]	Coordinates X[m]	Y[m]	Z[m]	Type	Loadvalue
Point			87.400	5.075	0.000	PG	50.0 [kN]
	gar	2100			activated		100.00 percent
Point			88.600	5.075	0.000	PG	50.0 [kN]
	gar	3100			activated		100.00 percent
Point			87.400	7.075	0.000	PG	50.0 [kN]
	gar	2100			activated		100.00 percent
Point			88.600	7.075	0.000	PG	50.0 [kN]
	gar	3100			activated		100.00 percent

Load Case 231 (L_1) K-EN-L

Factor forces and moments		1.000
Factor dead weight	DL-XX	0.000
Factor dead weight	DL-YY	0.000
Factor dead weight	DL-ZZ	0.000
unfavourable safety factor		1.500
favourable safety factor		0.000
Combination coefficient ψ-0		0.750 (rare)
Combination coefficient ψ-1'		0.800 (non frequent)
Combination coefficient ψ-1		0.750 (frequent)
Combination coefficient ψ-2		0.200 (permanent)

Loads

Kind	Referenceto	Projection W[m]	Coordinates X[m]	Y[m]	Z[m]	Type	Loadvalue
Point			91.622	5.075	0.000	PG	50.0 [kN]
	gar	3100			activated		100.00 percent
Point			92.822	5.075	0.000	PG	50.0 [kN]
	gar	3100			activated		100.00 percent
Point			91.622	7.075	0.000	PG	50.0 [kN]
	gar	3100			activated		100.00 percent
Point			92.822	7.075	0.000	PG	50.0 [kN]
	gar	3100			activated		100.00 percent

Load Case 232 (L_1) K-EN-L

Factor forces and moments		1.000
Factor dead weight	DL-XX	0.000
Factor dead weight	DL-YY	0.000
Factor dead weight	DL-ZZ	0.000
unfavourable safety factor		1.500
favourable safety factor		0.000
Combination coefficient ψ-0		0.750 (rare)
Combination coefficient ψ-1'		0.800 (non frequent)
Combination coefficient ψ-1		0.750 (frequent)
Combination coefficient ψ-2		0.200 (permanent)

Loads

Kind	Referenceto	Projection W[m]	Coordinates X[m]	Y[m]	Z[m]	Type	Loadvalue
Point			95.844	5.075	0.000	PG	50.0 [kN]
	gar	3100			activated		100.00 percent
Point			97.044	5.075	0.000	PG	50.0 [kN]

SOFiSTiK AG - www.sofistik.de

Composite bridge 38+50+38, b=14.25m, 2x2HL1100R HISTAR460 , slab 0.30m C30/37
Dead and moving loads

Loads

Kind	Referenceto	Projection W[m]	Coordinates X[m]	Y[m]	Z[m]	Type	Loadvalue
	gar 3100				activated		100.00 percent
Point			95.844	7.075	0.000	PG	50.0 [kN]
	gar 3100				activated		100.00 percent
Point			97.044	7.075	0.000	PG	50.0 [kN]
	gar 3100				activated		100.00 percent

Load Case 233 (L_1) K-EN-L

Factor forces and moments		1.000	
Factor dead weight	DL-XX	0.000	
Factor dead weight	DL-YY	0.000	
Factor dead weight	DL-ZZ	0.000	
unfavourable safety factor		1.500	
favourable safety factor		0.000	
Combination coefficient ψ-0		0.750	(rare)
Combination coefficient ψ-1'		0.800	(non frequent)
Combination coefficient ψ-1		0.750	(frequent)
Combination coefficient ψ-2		0.200	(permanent)

Loads

Kind	Referenceto	Projection W[m]	Coordinates X[m]	Y[m]	Z[m]	Type	Loadvalue
Point			100.067	5.075	0.000	PG	50.0 [kN]
	gar 3100				activated		100.00 percent
Point			101.267	5.075	0.000	PG	50.0 [kN]
	gar 3100				activated		100.00 percent
Point			100.067	7.075	0.000	PG	50.0 [kN]
	gar 3100				activated		100.00 percent
Point			101.267	7.075	0.000	PG	50.0 [kN]
	gar 3100				activated		100.00 percent

Load Case 234 (L_1) K-EN-L

Factor forces and moments		1.000	
Factor dead weight	DL-XX	0.000	
Factor dead weight	DL-YY	0.000	
Factor dead weight	DL-ZZ	0.000	
unfavourable safety factor		1.500	
favourable safety factor		0.000	
Combination coefficient ψ-0		0.750	(rare)
Combination coefficient ψ-1'		0.800	(non frequent)
Combination coefficient ψ-1		0.750	(frequent)
Combination coefficient ψ-2		0.200	(permanent)

Loads

Kind	Referenceto	Projection W[m]	Coordinates X[m]	Y[m]	Z[m]	Type	Loadvalue
Point			104.289	5.075	0.000	PG	50.0 [kN]
	gar 3100				activated		100.00 percent
Point			105.489	5.075	0.000	PG	50.0 [kN]
	gar 3100				activated		100.00 percent
Point			104.289	7.075	0.000	PG	50.0 [kN]
	gar 3100				activated		100.00 percent
Point			105.489	7.075	0.000	PG	50.0 [kN]
	gar 3100				activated		100.00 percent

SOFiSTiK AG - www.sofistik.de

Composite bridge 38+50+38, b=14.25m, 2x2HL1100R HISTAR460 , slab 0.30m C30/37
Dead and moving loads

Load Case 235 (L_1) K-EN-L

Factor forces and moments		1.000
Factor dead weight	DL-XX	0.000
Factor dead weight	DL-YY	0.000
Factor dead weight	DL-ZZ	0.000
unfavourable safety factor		1.500
favourable safety factor		0.000
Combination coefficient ψ-0		0.750 (rare)
Combination coefficient ψ-1'		0.800 (non frequent)
Combination coefficient ψ-1		0.750 (frequent)
Combination coefficient ψ-2		0.200 (permanent)

Loads

Kind	Referenceto	Projection W[m]	Coordinates X[m]	Y[m]	Z[m]	Type	Loadvalue
Point			108.511	5.075	0.000	PG	50.0 [kN]
	gar	3100			activated		100.00 percent
Point			109.711	5.075	0.000	PG	50.0 [kN]
	gar	3100			activated		100.00 percent
Point			108.511	7.075	0.000	PG	50.0 [kN]
	gar	3100			activated		100.00 percent
Point			109.711	7.075	0.000	PG	50.0 [kN]
	gar	3100			activated		100.00 percent

Load Case 236 (L_1) K-EN-L

Factor forces and moments		1.000
Factor dead weight	DL-XX	0.000
Factor dead weight	DL-YY	0.000
Factor dead weight	DL-ZZ	0.000
unfavourable safety factor		1.500
favourable safety factor		0.000
Combination coefficient ψ-0		0.750 (rare)
Combination coefficient ψ-1'		0.800 (non frequent)
Combination coefficient ψ-1		0.750 (frequent)
Combination coefficient ψ-2		0.200 (permanent)

Loads

Kind	Referenceto	Projection W[m]	Coordinates X[m]	Y[m]	Z[m]	Type	Loadvalue
Point			112.733	5.075	0.000	PG	50.0 [kN]
	gar	3100			activated		100.00 percent
Point			113.933	5.075	0.000	PG	50.0 [kN]
	gar	3100			activated		100.00 percent
Point			112.733	7.075	0.000	PG	50.0 [kN]
	gar	3100			activated		100.00 percent
Point			113.933	7.075	0.000	PG	50.0 [kN]
	gar	3100			activated		100.00 percent

Load Case 237 (L_1) K-EN-L

Factor forces and moments		1.000
Factor dead weight	DL-XX	0.000
Factor dead weight	DL-YY	0.000
Factor dead weight	DL-ZZ	0.000
unfavourable safety factor		1.500
favourable safety factor		0.000
Combination coefficient ψ-0		0.750 (rare)
Combination coefficient ψ-1'		0.800 (non frequent)
Combination coefficient ψ-1		0.750 (frequent)
Combination coefficient ψ-2		0.200 (permanent)

Loads

Kind	Referenceto	Projection W[m]	Coordinates X[m]	Y[m]	Z[m]	Type	Loadvalue
Point			116.956	5.075	0.000	PG	50.0 [kN]
	gar	3100			activated		100.00 percent
Point			118.156	5.075	0.000	PG	50.0 [kN]

SOFiSTiK AG - www.sofistik.de

Composite bridge 38+50+38, b=14.25m, 2x2HL1100R HISTAR460 , slab 0.30m C30/37
Dead and moving loads

Loads

Kind	Referenceto	Projection W[m]	Coordinates X[m]	Y[m]	Z[m]	Type	Loadvalue
	gar 3100				activated		100.00 percent
Point			116.956	7.075	0.000	PG	50.0 [kN]
	gar 3100				activated		100.00 percent
Point			118.156	7.075	0.000	PG	50.0 [kN]
	gar 3100				activated		100.00 percent

Load Case 238 (L_1) K-EN-L

Factor forces and moments		1.000	
Factor dead weight	DL-XX	0.000	
Factor dead weight	DL-YY	0.000	
Factor dead weight	DL-ZZ	0.000	
unfavourable safety factor		1.500	
favourable safety factor		0.000	
Combination coefficient ψ-0		0.750	(rare)
Combination coefficient ψ-1'		0.800	(non frequent)
Combination coefficient ψ-1		0.750	(frequent)
Combination coefficient ψ-2		0.200	(permanent)

Loads

Kind	Referenceto	Projection W[m]	Coordinates X[m]	Y[m]	Z[m]	Type	Loadvalue
Point			121.178	5.075	0.000	PG	50.0 [kN]
	gar 3100				activated		100.00 percent
Point			122.378	5.075	0.000	PG	50.0 [kN]
	gar 3100				activated		100.00 percent
Point			121.178	7.075	0.000	PG	50.0 [kN]
	gar 3100				activated		100.00 percent
Point			122.378	7.075	0.000	PG	50.0 [kN]
	gar 3100				activated		100.00 percent

Load Case 239 (L_1) K-EN-L

Factor forces and moments		1.000	
Factor dead weight	DL-XX	0.000	
Factor dead weight	DL-YY	0.000	
Factor dead weight	DL-ZZ	0.000	
unfavourable safety factor		1.500	
favourable safety factor		0.000	
Combination coefficient ψ-0		0.750	(rare)
Combination coefficient ψ-1'		0.800	(non frequent)
Combination coefficient ψ-1		0.750	(frequent)
Combination coefficient ψ-2		0.200	(permanent)

Loads

Kind	Referenceto	Projection W[m]	Coordinates X[m]	Y[m]	Z[m]	Type	Loadvalue
Point			125.400	5.075	0.000	PG	50.0 [kN]
	gar 3100				activated		100.00 percent
Point			126.600	5.075	0.000	PG	50.0 [kN]
	auto ????		(--)		activated		0.00 percent
Point			125.400	7.075	0.000	PG	50.0 [kN]
	gar 3100				activated		100.00 percent
Point			126.600	7.075	0.000	PG	50.0 [kN]
	auto ????		(--)		activated		0.00 percent

SOFiSTiK AG - www.sofistik.de

Composite bridge 38+50+38, b=14.25m, 2x2HL1100R HISTAR460 , slab 0.30m C30/37
Dead and moving loads

Load Case 410 (L_1) K-EN-R

Factor forces and moments		1.000	
Factor dead weight	DL-XX	0.000	
Factor dead weight	DL-YY	0.000	
Factor dead weight	DL-ZZ	0.000	
unfavourable safety factor		1.500	
favourable safety factor		0.000	
Combination coefficient ψ-0		0.750	(rare)
Combination coefficient ψ-1'		0.800	(non frequent)
Combination coefficient ψ-1		0.750	(frequent)
Combination coefficient ψ-2		0.200	(permanent)

Loads

Kind	Referenceto	Projection W[m]	Coordinates X[m]	Y[m]	Z[m]	Type	Loadvalue
Point			-0.600	7.675	0.000	PG	50.0 [kN]
	auto ????		(--)		activated		0.00 percent
Point			0.600	7.675	0.000	PG	50.0 [kN]
	gar 1100				activated		100.00 percent
Point			-0.600	9.675	0.000	PG	50.0 [kN]
	auto ????		(--)		activated		0.00 percent
Point			0.600	9.675	0.000	PG	50.0 [kN]
	gar 1900				activated		100.00 percent

Load Case 411 (L_1) K-EN-R

Factor forces and moments		1.000	
Factor dead weight	DL-XX	0.000	
Factor dead weight	DL-YY	0.000	
Factor dead weight	DL-ZZ	0.000	
unfavourable safety factor		1.500	
favourable safety factor		0.000	
Combination coefficient ψ-0		0.750	(rare)
Combination coefficient ψ-1'		0.800	(non frequent)
Combination coefficient ψ-1		0.750	(frequent)
Combination coefficient ψ-2		0.200	(permanent)

Loads

Kind	Referenceto	Projection W[m]	Coordinates X[m]	Y[m]	Z[m]	Type	Loadvalue
Point			3.622	7.675	0.000	PG	50.0 [kN]
	gar 1100				activated		100.00 percent
Point			4.822	7.675	0.000	PG	50.0 [kN]
	gar 1100				activated		100.00 percent
Point			3.622	9.675	0.000	PG	50.0 [kN]
	gar 1900				activated		100.00 percent
Point			4.822	9.675	0.000	PG	50.0 [kN]
	gar 1900				activated		100.00 percent

Load Case 412 (L_1) K-EN-R

Factor forces and moments		1.000	
Factor dead weight	DL-XX	0.000	
Factor dead weight	DL-YY	0.000	
Factor dead weight	DL-ZZ	0.000	
unfavourable safety factor		1.500	
favourable safety factor		0.000	
Combination coefficient ψ-0		0.750	(rare)
Combination coefficient ψ-1'		0.800	(non frequent)
Combination coefficient ψ-1		0.750	(frequent)
Combination coefficient ψ-2		0.200	(permanent)

Loads

Kind	Referenceto	Projection W[m]	Coordinates X[m]	Y[m]	Z[m]	Type	Loadvalue
Point			7.844	7.675	0.000	PG	50.0 [kN]
	gar 1100				activated		100.00 percent
Point			9.044	7.675	0.000	PG	50.0 [kN]

SOFiSTiK AG - www.sofistik.de

Composite bridge 38+50+38, b=14.25m, 2x2HL1100R HISTAR460 , slab 0.30m C30/37
Dead and moving loads

Loads

Kind	Referenceto	Projection W[m]	Coordinates X[m]	Y[m]	Z[m]	Type	Loadvalue
	gar 1100				activated		100.00 percent
Point			7.844	9.675	0.000	PG	50.0 [kN]
	gar 1900				activated		100.00 percent
Point			9.044	9.675	0.000	PG	50.0 [kN]
	gar 1900				activated		100.00 percent

Load Case 413 (L_1) K-EN-R

Factor forces and moments		1.000	
Factor dead weight	DL-XX	0.000	
Factor dead weight	DL-YY	0.000	
Factor dead weight	DL-ZZ	0.000	
unfavourable safety factor		1.500	
favourable safety factor		0.000	
Combination coefficient ψ-0		0.750	(rare)
Combination coefficient ψ-1'		0.800	(non frequent)
Combination coefficient ψ-1		0.750	(frequent)
Combination coefficient ψ-2		0.200	(permanent)

Loads

Kind	Referenceto	Projection W[m]	Coordinates X[m]	Y[m]	Z[m]	Type	Loadvalue
Point			12.067	7.675	0.000	PG	50.0 [kN]
	gar 1100				activated		100.00 percent
Point			13.267	7.675	0.000	PG	50.0 [kN]
	gar 1100				activated		100.00 percent
Point			12.067	9.675	0.000	PG	50.0 [kN]
	gar 1900				activated		100.00 percent
Point			13.267	9.675	0.000	PG	50.0 [kN]
	gar 1900				activated		100.00 percent

Load Case 414 (L_1) K-EN-R

Factor forces and moments		1.000	
Factor dead weight	DL-XX	0.000	
Factor dead weight	DL-YY	0.000	
Factor dead weight	DL-ZZ	0.000	
unfavourable safety factor		1.500	
favourable safety factor		0.000	
Combination coefficient ψ-0		0.750	(rare)
Combination coefficient ψ-1'		0.800	(non frequent)
Combination coefficient ψ-1		0.750	(frequent)
Combination coefficient ψ-2		0.200	(permanent)

Loads

Kind	Referenceto	Projection W[m]	Coordinates X[m]	Y[m]	Z[m]	Type	Loadvalue
Point			16.289	7.675	0.000	PG	50.0 [kN]
	gar 1100				activated		100.00 percent
Point			17.489	7.675	0.000	PG	50.0 [kN]
	gar 1100				activated		100.00 percent
Point			16.289	9.675	0.000	PG	50.0 [kN]
	gar 1900				activated		100.00 percent
Point			17.489	9.675	0.000	PG	50.0 [kN]
	gar 1900				activated		100.00 percent

SOFiSTiK AG - www.sofistik.de

Composite bridge 38+50+38, b=14.25m, 2x2HL1100R HISTAR460 , slab 0.30m C30/37
Dead and moving loads

Load Case 415 (L_1) K-EN-R

Factor forces and moments		1.000
Factor dead weight	DL-XX	0.000
Factor dead weight	DL-YY	0.000
Factor dead weight	DL-ZZ	0.000
unfavourable safety factor		1.500
favourable safety factor		0.000
Combination coefficient ψ-0		0.750 (rare)
Combination coefficient ψ-1'		0.800 (non frequent)
Combination coefficient ψ-1		0.750 (frequent)
Combination coefficient ψ-2		0.200 (permanent)

Loads

Kind	Referenceto	Projection W[m]	Coordinates X[m]	Y[m]	Z[m]	Type	Loadvalue
Point			20.511	7.675	0.000	PG	50.0 [kN]
	gar 1100				activated		100.00 percent
Point			21.711	7.675	0.000	PG	50.0 [kN]
	gar 1100				activated		100.00 percent
Point			20.511	9.675	0.000	PG	50.0 [kN]
	gar 1900				activated		100.00 percent
Point			21.711	9.675	0.000	PG	50.0 [kN]
	gar 1900				activated		100.00 percent

Load Case 416 (L_1) K-EN-R

Factor forces and moments		1.000
Factor dead weight	DL-XX	0.000
Factor dead weight	DL-YY	0.000
Factor dead weight	DL-ZZ	0.000
unfavourable safety factor		1.500
favourable safety factor		0.000
Combination coefficient ψ-0		0.750 (rare)
Combination coefficient ψ-1'		0.800 (non frequent)
Combination coefficient ψ-1		0.750 (frequent)
Combination coefficient ψ-2		0.200 (permanent)

Loads

Kind	Referenceto	Projection W[m]	Coordinates X[m]	Y[m]	Z[m]	Type	Loadvalue
Point			24.733	7.675	0.000	PG	50.0 [kN]
	gar 1100				activated		100.00 percent
Point			25.933	7.675	0.000	PG	50.0 [kN]
	gar 1100				activated		100.00 percent
Point			24.733	9.675	0.000	PG	50.0 [kN]
	gar 1900				activated		100.00 percent
Point			25.933	9.675	0.000	PG	50.0 [kN]
	gar 1900				activated		100.00 percent

Load Case 417 (L_1) K-EN-R

Factor forces and moments		1.000
Factor dead weight	DL-XX	0.000
Factor dead weight	DL-YY	0.000
Factor dead weight	DL-ZZ	0.000
unfavourable safety factor		1.500
favourable safety factor		0.000
Combination coefficient ψ-0		0.750 (rare)
Combination coefficient ψ-1'		0.800 (non frequent)
Combination coefficient ψ-1		0.750 (frequent)
Combination coefficient ψ-2		0.200 (permanent)

Loads

Kind	Referenceto	Projection W[m]	Coordinates X[m]	Y[m]	Z[m]	Type	Loadvalue
Point			28.956	7.675	0.000	PG	50.0 [kN]
	gar 1100				activated		100.00 percent
Point			30.156	7.675	0.000	PG	50.0 [kN]

SOFiSTiK AG - www.sofistik.de

Composite bridge 38+50+38, b=14.25m, 2x2HL1100R HISTAR460 , slab 0.30m C30/37
Dead and moving loads

Loads

Kind	**Referenceto**	**Projection W[m]**	**Coordinates X[m]**	**Y[m]**	**Z[m]**	**Type**	**Loadvalue**
	gar 1100				activated		100.00 percent
Point			28.956	9.675	0.000	PG	50.0 [kN]
	gar 1900				activated		100.00 percent
Point			30.156	9.675	0.000	PG	50.0 [kN]
	gar 1900				activated		100.00 percent

Load Case 418 (L_1) K-EN-R

Factor forces and moments		1.000	
Factor dead weight	DL-XX	0.000	
Factor dead weight	DL-YY	0.000	
Factor dead weight	DL-ZZ	0.000	
unfavourable safety factor		1.500	
favourable safety factor		0.000	
Combination coefficient ψ-0		0.750	(rare)
Combination coefficient ψ-1'		0.800	(non frequent)
Combination coefficient ψ-1		0.750	(frequent)
Combination coefficient ψ-2		0.200	(permanent)

Loads

Kind	**Referenceto**	**Projection W[m]**	**Coordinates X[m]**	**Y[m]**	**Z[m]**	**Type**	**Loadvalue**
Point			33.178	7.675	0.000	PG	50.0 [kN]
	gar 1100				activated		100.00 percent
Point			34.378	7.675	0.000	PG	50.0 [kN]
	gar 1100				activated		100.00 percent
Point			33.178	9.675	0.000	PG	50.0 [kN]
	gar 1900				activated		100.00 percent
Point			34.378	9.675	0.000	PG	50.0 [kN]
	gar 1900				activated		100.00 percent

Load Case 419 (L_1) K-EN-R

Factor forces and moments		1.000	
Factor dead weight	DL-XX	0.000	
Factor dead weight	DL-YY	0.000	
Factor dead weight	DL-ZZ	0.000	
unfavourable safety factor		1.500	
favourable safety factor		0.000	
Combination coefficient ψ-0		0.750	(rare)
Combination coefficient ψ-1'		0.800	(non frequent)
Combination coefficient ψ-1		0.750	(frequent)
Combination coefficient ψ-2		0.200	(permanent)

Loads

Kind	**Referenceto**	**Projection W[m]**	**Coordinates X[m]**	**Y[m]**	**Z[m]**	**Type**	**Loadvalue**
Point			37.400	7.675	0.000	PG	50.0 [kN]
	gar 1100				activated		100.00 percent
Point			38.600	7.675	0.000	PG	50.0 [kN]
	gar 2100				activated		100.00 percent
Point			37.400	9.675	0.000	PG	50.0 [kN]
	gar 1900				activated		100.00 percent
Point			38.600	9.675	0.000	PG	50.0 [kN]
	gar 2900				activated		100.00 percent

SOFiSTiK AG - www.sofistik.de

Composite bridge 38+50+38, b=14.25m, 2x2HL1100R HISTAR460 , slab 0.30m C30/37
Dead and moving loads

Load Case 420 (L_1) K-EN-R

Factor forces and moments		1.000
Factor dead weight	DL-XX	0.000
Factor dead weight	DL-YY	0.000
Factor dead weight	DL-ZZ	0.000
unfavourable safety factor		1.500
favourable safety factor		0.000
Combination coefficient ψ-0		0.750 (rare)
Combination coefficient ψ-1'		0.800 (non frequent)
Combination coefficient ψ-1		0.750 (frequent)
Combination coefficient ψ-2		0.200 (permanent)

Loads

Kind	Referenceto	Projection W[m]	Coordinates X[m]	Y[m]	Z[m]	Type	Loadvalue
Point			37.400	7.675	0.000	PG	50.0 [kN]
	gar 1100				activated		100.00 percent
Point			38.600	7.675	0.000	PG	50.0 [kN]
	gar 2100				activated		100.00 percent
Point			37.400	9.675	0.000	PG	50.0 [kN]
	gar 1900				activated		100.00 percent
Point			38.600	9.675	0.000	PG	50.0 [kN]
	gar 2900				activated		100.00 percent

Load Case 421 (L_1) K-EN-R

Factor forces and moments		1.000
Factor dead weight	DL-XX	0.000
Factor dead weight	DL-YY	0.000
Factor dead weight	DL-ZZ	0.000
unfavourable safety factor		1.500
favourable safety factor		0.000
Combination coefficient ψ-0		0.750 (rare)
Combination coefficient ψ-1'		0.800 (non frequent)
Combination coefficient ψ-1		0.750 (frequent)
Combination coefficient ψ-2		0.200 (permanent)

Loads

Kind	Referenceto	Projection W[m]	Coordinates X[m]	Y[m]	Z[m]	Type	Loadvalue
Point			42.956	7.675	0.000	PG	50.0 [kN]
	gar 2100				activated		100.00 percent
Point			44.156	7.675	0.000	PG	50.0 [kN]
	gar 2100				activated		100.00 percent
Point			42.956	9.675	0.000	PG	50.0 [kN]
	gar 2900				activated		100.00 percent
Point			44.156	9.675	0.000	PG	50.0 [kN]
	gar 2900				activated		100.00 percent

Load Case 422 (L_1) K-EN-R

Factor forces and moments		1.000
Factor dead weight	DL-XX	0.000
Factor dead weight	DL-YY	0.000
Factor dead weight	DL-ZZ	0.000
unfavourable safety factor		1.500
favourable safety factor		0.000
Combination coefficient ψ-0		0.750 (rare)
Combination coefficient ψ-1'		0.800 (non frequent)
Combination coefficient ψ-1		0.750 (frequent)
Combination coefficient ψ-2		0.200 (permanent)

Loads

Kind	Referenceto	Projection W[m]	Coordinates X[m]	Y[m]	Z[m]	Type	Loadvalue
Point			48.511	7.675	0.000	PG	50.0 [kN]
	gar 2100				activated		100.00 percent
Point			49.711	7.675	0.000	PG	50.0 [kN]

SOFiSTiK AG - www.sofistik.de

Composite bridge 38+50+38, b=14.25m, 2x2HL1100R HISTAR460 , slab 0.30m C30/37
Dead and moving loads

Loads

Kind	Referenceto	Projection W[m]	Coordinates X[m]	Y[m]	Z[m]	Type	Loadvalue
	gar 2100				activated		100.00 percent
Point			48.511	9.675	0.000	PG	50.0 [kN]
	gar 2900				activated		100.00 percent
Point			49.711	9.675	0.000	PG	50.0 [kN]
	gar 2900				activated		100.00 percent

Load Case 423 (L_1) K-EN-R

Factor forces and moments		1.000	
Factor dead weight	DL-XX	0.000	
Factor dead weight	DL-YY	0.000	
Factor dead weight	DL-ZZ	0.000	
unfavourable safety factor		1.500	
favourable safety factor		0.000	
Combination coefficient ψ-0		0.750	(rare)
Combination coefficient ψ-1'		0.800	(non frequent)
Combination coefficient ψ-1		0.750	(frequent)
Combination coefficient ψ-2		0.200	(permanent)

Loads

Kind	Referenceto	Projection W[m]	Coordinates X[m]	Y[m]	Z[m]	Type	Loadvalue
Point			54.067	7.675	0.000	PG	50.0 [kN]
	gar 2100				activated		100.00 percent
Point			55.267	7.675	0.000	PG	50.0 [kN]
	gar 2100				activated		100.00 percent
Point			54.067	9.675	0.000	PG	50.0 [kN]
	gar 2900				activated		100.00 percent
Point			55.267	9.675	0.000	PG	50.0 [kN]
	gar 2900				activated		100.00 percent

Load Case 424 (L_1) K-EN-R

Factor forces and moments		1.000	
Factor dead weight	DL-XX	0.000	
Factor dead weight	DL-YY	0.000	
Factor dead weight	DL-ZZ	0.000	
unfavourable safety factor		1.500	
favourable safety factor		0.000	
Combination coefficient ψ-0		0.750	(rare)
Combination coefficient ψ-1'		0.800	(non frequent)
Combination coefficient ψ-1		0.750	(frequent)
Combination coefficient ψ-2		0.200	(permanent)

Loads

Kind	Referenceto	Projection W[m]	Coordinates X[m]	Y[m]	Z[m]	Type	Loadvalue
Point			59.622	7.675	0.000	PG	50.0 [kN]
	gar 2100				activated		100.00 percent
Point			60.822	7.675	0.000	PG	50.0 [kN]
	gar 2100				activated		100.00 percent
Point			59.622	9.675	0.000	PG	50.0 [kN]
	gar 2900				activated		100.00 percent
Point			60.822	9.675	0.000	PG	50.0 [kN]
	gar 2900				activated		100.00 percent

SOFiSTiK AG - www.sofistik.de

Composite bridge 38+50+38, b=14.25m, 2x2HL1100R HISTAR460 , slab 0.30m C30/37
Dead and moving loads

Load Case 425 (L_1) K-EN-R

Factor forces and moments		1.000
Factor dead weight	DL-XX	0.000
Factor dead weight	DL-YY	0.000
Factor dead weight	DL-ZZ	0.000
unfavourable safety factor		1.500
favourable safety factor		0.000
Combination coefficient ψ-0		0.750 (rare)
Combination coefficient ψ-1'		0.800 (non frequent)
Combination coefficient ψ-1		0.750 (frequent)
Combination coefficient ψ-2		0.200 (permanent)

Loads

Kind	Referenceto	Projection W[m]	Coordinates X[m]	Y[m]	Z[m]	Type	Loadvalue
Point			65.178	7.675	0.000	PG	50.0 [kN]
	gar	2100			activated		100.00 percent
Point			66.378	7.675	0.000	PG	50.0 [kN]
	gar	2100			activated		100.00 percent
Point			65.178	9.675	0.000	PG	50.0 [kN]
	gar	2900			activated		100.00 percent
Point			66.378	9.675	0.000	PG	50.0 [kN]
	gar	2900			activated		100.00 percent

Load Case 426 (L_1) K-EN-R

Factor forces and moments		1.000
Factor dead weight	DL-XX	0.000
Factor dead weight	DL-YY	0.000
Factor dead weight	DL-ZZ	0.000
unfavourable safety factor		1.500
favourable safety factor		0.000
Combination coefficient ψ-0		0.750 (rare)
Combination coefficient ψ-1'		0.800 (non frequent)
Combination coefficient ψ-1		0.750 (frequent)
Combination coefficient ψ-2		0.200 (permanent)

Loads

Kind	Referenceto	Projection W[m]	Coordinates X[m]	Y[m]	Z[m]	Type	Loadvalue
Point			70.733	7.675	0.000	PG	50.0 [kN]
	gar	2100			activated		100.00 percent
Point			71.933	7.675	0.000	PG	50.0 [kN]
	gar	2100			activated		100.00 percent
Point			70.733	9.675	0.000	PG	50.0 [kN]
	gar	2900			activated		100.00 percent
Point			71.933	9.675	0.000	PG	50.0 [kN]
	gar	2900			activated		100.00 percent

Load Case 427 (L_1) K-EN-R

Factor forces and moments		1.000
Factor dead weight	DL-XX	0.000
Factor dead weight	DL-YY	0.000
Factor dead weight	DL-ZZ	0.000
unfavourable safety factor		1.500
favourable safety factor		0.000
Combination coefficient ψ-0		0.750 (rare)
Combination coefficient ψ-1'		0.800 (non frequent)
Combination coefficient ψ-1		0.750 (frequent)
Combination coefficient ψ-2		0.200 (permanent)

Loads

Kind	Referenceto	Projection W[m]	Coordinates X[m]	Y[m]	Z[m]	Type	Loadvalue
Point			76.289	7.675	0.000	PG	50.0 [kN]
	gar	2100			activated		100.00 percent
Point			77.489	7.675	0.000	PG	50.0 [kN]

SOFiSTiK AG - www.sofistik.de

Composite bridge 38+50+38, b=14.25m, 2x2HL1100R HISTAR460 , slab 0.30m C30/37
Dead and moving loads

Loads

Kind	Referenceto	Projection W[m]	Coordinates X[m]	Y[m]	Z[m]	Type	Loadvalue
	gar 2100				activated		100.00 percent
Point			76.289	9.675	0.000	PG	50.0 [kN]
	gar 2900				activated		100.00 percent
Point			77.489	9.675	0.000	PG	50.0 [kN]
	gar 2900				activated		100.00 percent

Load Case 428 (L_1) K-EN-R

Factor forces and moments		1.000	
Factor dead weight	DL-XX	0.000	
Factor dead weight	DL-YY	0.000	
Factor dead weight	DL-ZZ	0.000	
unfavourable safety factor		1.500	
favourable safety factor		0.000	
Combination coefficient ψ-0		0.750	(rare)
Combination coefficient ψ-1'		0.800	(non frequent)
Combination coefficient ψ-1		0.750	(frequent)
Combination coefficient ψ-2		0.200	(permanent)

Loads

Kind	Referenceto	Projection W[m]	Coordinates X[m]	Y[m]	Z[m]	Type	Loadvalue
Point			81.844	7.675	0.000	PG	50.0 [kN]
	gar 2100				activated		100.00 percent
Point			83.044	7.675	0.000	PG	50.0 [kN]
	gar 2100				activated		100.00 percent
Point			81.844	9.675	0.000	PG	50.0 [kN]
	gar 2900				activated		100.00 percent
Point			83.044	9.675	0.000	PG	50.0 [kN]
	gar 2900				activated		100.00 percent

Load Case 429 (L_1) K-EN-R

Factor forces and moments		1.000	
Factor dead weight	DL-XX	0.000	
Factor dead weight	DL-YY	0.000	
Factor dead weight	DL-ZZ	0.000	
unfavourable safety factor		1.500	
favourable safety factor		0.000	
Combination coefficient ψ-0		0.750	(rare)
Combination coefficient ψ-1'		0.800	(non frequent)
Combination coefficient ψ-1		0.750	(frequent)
Combination coefficient ψ-2		0.200	(permanent)

Loads

Kind	Referenceto	Projection W[m]	Coordinates X[m]	Y[m]	Z[m]	Type	Loadvalue
Point			87.400	7.675	0.000	PG	50.0 [kN]
	gar 2100				activated		100.00 percent
Point			88.600	7.675	0.000	PG	50.0 [kN]
	gar 3100				activated		100.00 percent
Point			87.400	9.675	0.000	PG	50.0 [kN]
	gar 2900				activated		100.00 percent
Point			88.600	9.675	0.000	PG	50.0 [kN]
	gar 3900				activated		100.00 percent

SOFiSTiK AG - www.sofistik.de

Composite bridge 38+50+38, b=14.25m, 2x2HL1100R HISTAR460 , slab 0.30m C30/37
Dead and moving loads

Load Case 430 (L_1) K-EN-R

Factor forces and moments		1.000
Factor dead weight	DL-XX	0.000
Factor dead weight	DL-YY	0.000
Factor dead weight	DL-ZZ	0.000
unfavourable safety factor		1.500
favourable safety factor		0.000
Combination coefficient ψ-0		0.750 (rare)
Combination coefficient ψ-1'		0.800 (non frequent)
Combination coefficient ψ-1		0.750 (frequent)
Combination coefficient ψ-2		0.200 (permanent)

Loads

Kind	Referenceto	Projection W[m]	Coordinates X[m]	Y[m]	Z[m]	Type	Loadvalue
Point			87.400	7.675	0.000	PG	50.0 [kN]
	gar	2100			activated		100.00 percent
Point			88.600	7.675	0.000	PG	50.0 [kN]
	gar	3100			activated		100.00 percent
Point			87.400	9.675	0.000	PG	50.0 [kN]
	gar	2900			activated		100.00 percent
Point			88.600	9.675	0.000	PG	50.0 [kN]
	gar	3900			activated		100.00 percent

Load Case 431 (L_1) K-EN-R

Factor forces and moments		1.000
Factor dead weight	DL-XX	0.000
Factor dead weight	DL-YY	0.000
Factor dead weight	DL-ZZ	0.000
unfavourable safety factor		1.500
favourable safety factor		0.000
Combination coefficient ψ-0		0.750 (rare)
Combination coefficient ψ-1'		0.800 (non frequent)
Combination coefficient ψ-1		0.750 (frequent)
Combination coefficient ψ-2		0.200 (permanent)

Loads

Kind	Referenceto	Projection W[m]	Coordinates X[m]	Y[m]	Z[m]	Type	Loadvalue
Point			91.622	7.675	0.000	PG	50.0 [kN]
	gar	3100			activated		100.00 percent
Point			92.822	7.675	0.000	PG	50.0 [kN]
	gar	3100			activated		100.00 percent
Point			91.622	9.675	0.000	PG	50.0 [kN]
	gar	3900			activated		100.00 percent
Point			92.822	9.675	0.000	PG	50.0 [kN]
	gar	3900			activated		100.00 percent

Load Case 432 (L_1) K-EN-R

Factor forces and moments		1.000
Factor dead weight	DL-XX	0.000
Factor dead weight	DL-YY	0.000
Factor dead weight	DL-ZZ	0.000
unfavourable safety factor		1.500
favourable safety factor		0.000
Combination coefficient ψ-0		0.750 (rare)
Combination coefficient ψ-1'		0.800 (non frequent)
Combination coefficient ψ-1		0.750 (frequent)
Combination coefficient ψ-2		0.200 (permanent)

Loads

Kind	Referenceto	Projection W[m]	Coordinates X[m]	Y[m]	Z[m]	Type	Loadvalue
Point			95.844	7.675	0.000	PG	50.0 [kN]
	gar	3100			activated		100.00 percent
Point			97.044	7.675	0.000	PG	50.0 [kN]

SOFiSTiK AG - www.sofistik.de

Composite bridge 38+50+38, b=14.25m, 2x2HL1100R HISTAR460 , slab 0.30m C30/37
Dead and moving loads

Loads

Kind	Referenceto	Projection W[m]	Coordinates X[m]	Y[m]	Z[m]	Type	Loadvalue
	gar 3100				activated		100.00 percent
Point			95.844	9.675	0.000	PG	50.0 [kN]
	gar 3900				activated		100.00 percent
Point			97.044	9.675	0.000	PG	50.0 [kN]
	gar 3900				activated		100.00 percent

Load Case 433 (L_1) K-EN-R

Factor forces and moments		1.000	
Factor dead weight	DL-XX	0.000	
Factor dead weight	DL-YY	0.000	
Factor dead weight	DL-ZZ	0.000	
unfavourable safety factor		1.500	
favourable safety factor		0.000	
Combination coefficient ψ-0		0.750	(rare)
Combination coefficient ψ-1'		0.800	(non frequent)
Combination coefficient ψ-1		0.750	(frequent)
Combination coefficient ψ-2		0.200	(permanent)

Loads

Kind	Referenceto	Projection W[m]	Coordinates X[m]	Y[m]	Z[m]	Type	Loadvalue
Point			100.067	7.675	0.000	PG	50.0 [kN]
	gar 3100				activated		100.00 percent
Point			101.267	7.675	0.000	PG	50.0 [kN]
	gar 3100				activated		100.00 percent
Point			100.067	9.675	0.000	PG	50.0 [kN]
	gar 3900				activated		100.00 percent
Point			101.267	9.675	0.000	PG	50.0 [kN]
	gar 3900				activated		100.00 percent

Load Case 434 (L_1) K-EN-R

Factor forces and moments		1.000	
Factor dead weight	DL-XX	0.000	
Factor dead weight	DL-YY	0.000	
Factor dead weight	DL-ZZ	0.000	
unfavourable safety factor		1.500	
favourable safety factor		0.000	
Combination coefficient ψ-0		0.750	(rare)
Combination coefficient ψ-1'		0.800	(non frequent)
Combination coefficient ψ-1		0.750	(frequent)
Combination coefficient ψ-2		0.200	(permanent)

Loads

Kind	Referenceto	Projection W[m]	Coordinates X[m]	Y[m]	Z[m]	Type	Loadvalue
Point			104.289	7.675	0.000	PG	50.0 [kN]
	gar 3100				activated		100.00 percent
Point			105.489	7.675	0.000	PG	50.0 [kN]
	gar 3100				activated		100.00 percent
Point			104.289	9.675	0.000	PG	50.0 [kN]
	gar 3900				activated		100.00 percent
Point			105.489	9.675	0.000	PG	50.0 [kN]
	gar 3900				activated		100.00 percent

SOFiSTiK AG - www.sofistik.de

Composite bridge 38+50+38, b=14.25m, 2x2HL1100R HISTAR460 , slab 0.30m C30/37
Dead and moving loads

Load Case 435 (L_1) K-EN-R

Factor forces and moments		1.000	
Factor dead weight	DL-XX	0.000	
Factor dead weight	DL-YY	0.000	
Factor dead weight	DL-ZZ	0.000	
unfavourable safety factor		1.500	
favourable safety factor		0.000	
Combination coefficient ψ-0		0.750	(rare)
Combination coefficient ψ-1'		0.800	(non frequent)
Combination coefficient ψ-1		0.750	(frequent)
Combination coefficient ψ-2		0.200	(permanent)

Loads

Kind	Referenceto	Projection W[m]	Coordinates X[m]	Y[m]	Z[m]	Type	Loadvalue
Point			108.511	7.675	0.000	PG	50.0 [kN]
	gar	3100			activated		100.00 percent
Point			109.711	7.675	0.000	PG	50.0 [kN]
	gar	3100			activated		100.00 percent
Point			108.511	9.675	0.000	PG	50.0 [kN]
	gar	3900			activated		100.00 percent
Point			109.711	9.675	0.000	PG	50.0 [kN]
	gar	3900			activated		100.00 percent

Load Case 436 (L_1) K-EN-R

Factor forces and moments		1.000	
Factor dead weight	DL-XX	0.000	
Factor dead weight	DL-YY	0.000	
Factor dead weight	DL-ZZ	0.000	
unfavourable safety factor		1.500	
favourable safety factor		0.000	
Combination coefficient ψ-0		0.750	(rare)
Combination coefficient ψ-1'		0.800	(non frequent)
Combination coefficient ψ-1		0.750	(frequent)
Combination coefficient ψ-2		0.200	(permanent)

Loads

Kind	Referenceto	Projection W[m]	Coordinates X[m]	Y[m]	Z[m]	Type	Loadvalue
Point			112.733	7.675	0.000	PG	50.0 [kN]
	gar	3100			activated		100.00 percent
Point			113.933	7.675	0.000	PG	50.0 [kN]
	gar	3100			activated		100.00 percent
Point			112.733	9.675	0.000	PG	50.0 [kN]
	gar	3900			activated		100.00 percent
Point			113.933	9.675	0.000	PG	50.0 [kN]
	gar	3900			activated		100.00 percent

Load Case 437 (L_1) K-EN-R

Factor forces and moments		1.000	
Factor dead weight	DL-XX	0.000	
Factor dead weight	DL-YY	0.000	
Factor dead weight	DL-ZZ	0.000	
unfavourable safety factor		1.500	
favourable safety factor		0.000	
Combination coefficient ψ-0		0.750	(rare)
Combination coefficient ψ-1'		0.800	(non frequent)
Combination coefficient ψ-1		0.750	(frequent)
Combination coefficient ψ-2		0.200	(permanent)

Loads

Kind	Referenceto	Projection W[m]	Coordinates X[m]	Y[m]	Z[m]	Type	Loadvalue
Point			116.956	7.675	0.000	PG	50.0 [kN]
	gar	3100			activated		100.00 percent
Point			118.156	7.675	0.000	PG	50.0 [kN]

SOFiSTiK AG - www.sofistik.de

Composite bridge 38+50+38, b=14.25m, 2x2HL1100R HISTAR460 , slab 0.30m C30/37
Dead and moving loads

Loads

Kind	Referenceto	Projection W[m]	Coordinates X[m]	Y[m]	Z[m]	Type	Loadvalue
	gar 3100			activated			100.00 percent
Point			116.956	9.675	0.000	PG	50.0 [kN]
	gar 3900			activated			100.00 percent
Point			118.156	9.675	0.000	PG	50.0 [kN]
	gar 3900			activated			100.00 percent

Load Case 438 (L_1) K-EN-R

Factor forces and moments		1.000	
Factor dead weight	DL-XX	0.000	
Factor dead weight	DL-YY	0.000	
Factor dead weight	DL-ZZ	0.000	
unfavourable safety factor		1.500	
favourable safety factor		0.000	
Combination coefficient ψ-0		0.750	(rare)
Combination coefficient ψ-1'		0.800	(non frequent)
Combination coefficient ψ-1		0.750	(frequent)
Combination coefficient ψ-2		0.200	(permanent)

Loads

Kind	Referenceto	Projection W[m]	Coordinates X[m]	Y[m]	Z[m]	Type	Loadvalue
Point			121.178	7.675	0.000	PG	50.0 [kN]
	gar 3100			activated			100.00 percent
Point			122.378	7.675	0.000	PG	50.0 [kN]
	gar 3100			activated			100.00 percent
Point			121.178	9.675	0.000	PG	50.0 [kN]
	gar 3900			activated			100.00 percent
Point			122.378	9.675	0.000	PG	50.0 [kN]
	gar 3900			activated			100.00 percent

Load Case 439 (L_1) K-EN-R

Factor forces and moments		1.000	
Factor dead weight	DL-XX	0.000	
Factor dead weight	DL-YY	0.000	
Factor dead weight	DL-ZZ	0.000	
unfavourable safety factor		1.500	
favourable safety factor		0.000	
Combination coefficient ψ-0		0.750	(rare)
Combination coefficient ψ-1'		0.800	(non frequent)
Combination coefficient ψ-1		0.750	(frequent)
Combination coefficient ψ-2		0.200	(permanent)

Loads

Kind	Referenceto	Projection W[m]	Coordinates X[m]	Y[m]	Z[m]	Type	Loadvalue
Point			125.400	7.675	0.000	PG	50.0 [kN]
	gar 3100			activated			100.00 percent
Point			126.600	7.675	0.000	PG	50.0 [kN]
	auto ????		(--)	activated			0.00 percent
Point			125.400	9.675	0.000	PG	50.0 [kN]
	gar 3900			activated			100.00 percent
Point			126.600	9.675	0.000	PG	50.0 [kN]
	auto ????		(--)	activated			0.00 percent

SOFiSTiK AG - www.sofistik.de

Composite bridge 38+50+38, b=14.25m, 2x2HL1100R HISTAR460 , slab 0.30m C30/37
Dead and moving loads

Load Case 510 (L_1) K-EN-R

Factor forces and moments		1.000
Factor dead weight	DL-XX	0.000
Factor dead weight	DL-YY	0.000
Factor dead weight	DL-ZZ	0.000
unfavourable safety factor		1.500
favourable safety factor		0.000
Combination coefficient ψ-0		0.750 (rare)
Combination coefficient ψ-1'		0.800 (non frequent)
Combination coefficient ψ-1		0.750 (frequent)
Combination coefficient ψ-2		0.200 (permanent)

Loads

Kind	Referenceto	Projection W[m]	Coordinates X[m]	Y[m]	Z[m]	Type	Loadvalue
Point			-0.600	4.675	0.000	PG	50.0 [kN]
	auto ????		(--)		activated		0.00 percent
Point			0.600	4.675	0.000	PG	50.0 [kN]
	gar 1100				activated		100.00 percent
Point			-0.600	6.675	0.000	PG	50.0 [kN]
	auto ????		(--)		activated		0.00 percent
Point			0.600	6.675	0.000	PG	50.0 [kN]
	gar 1100				activated		100.00 percent

Load Case 511 (L_1) K-EN-R

Factor forces and moments		1.000
Factor dead weight	DL-XX	0.000
Factor dead weight	DL-YY	0.000
Factor dead weight	DL-ZZ	0.000
unfavourable safety factor		1.500
favourable safety factor		0.000
Combination coefficient ψ-0		0.750 (rare)
Combination coefficient ψ-1'		0.800 (non frequent)
Combination coefficient ψ-1		0.750 (frequent)
Combination coefficient ψ-2		0.200 (permanent)

Loads

Kind	Referenceto	Projection W[m]	Coordinates X[m]	Y[m]	Z[m]	Type	Loadvalue
Point			3.622	4.675	0.000	PG	50.0 [kN]
	gar 1100				activated		100.00 percent
Point			4.822	4.675	0.000	PG	50.0 [kN]
	gar 1100				activated		100.00 percent
Point			3.622	6.675	0.000	PG	50.0 [kN]
	gar 1100				activated		100.00 percent
Point			4.822	6.675	0.000	PG	50.0 [kN]
	gar 1100				activated		100.00 percent

Load Case 512 (L_1) K-EN-R

Factor forces and moments		1.000
Factor dead weight	DL-XX	0.000
Factor dead weight	DL-YY	0.000
Factor dead weight	DL-ZZ	0.000
unfavourable safety factor		1.500
favourable safety factor		0.000
Combination coefficient ψ-0		0.750 (rare)
Combination coefficient ψ-1'		0.800 (non frequent)
Combination coefficient ψ-1		0.750 (frequent)
Combination coefficient ψ-2		0.200 (permanent)

Loads

Kind	Referenceto	Projection W[m]	Coordinates X[m]	Y[m]	Z[m]	Type	Loadvalue
Point			7.844	4.675	0.000	PG	50.0 [kN]
	gar 1100				activated		100.00 percent
Point			9.044	4.675	0.000	PG	50.0 [kN]

SOFiSTiK AG - www.sofistik.de

Composite bridge 38+50+38, b=14.25m, 2x2HL1100R HISTAR460 , slab 0.30m C30/37
Dead and moving loads

Loads

Kind	**Referenceto**	**Projection W[m]**	**Coordinates X[m]**	**Y[m]**	**Z[m]**	**Type**	**Loadvalue**
	gar 1100				activated		100.00 percent
Point			7.844	6.675	0.000	PG	50.0 [kN]
	gar 1100				activated		100.00 percent
Point			9.044	6.675	0.000	PG	50.0 [kN]
	gar 1100				activated		100.00 percent

Load Case 513 (L_1) K-EN-R

Factor forces and moments		1.000	
Factor dead weight	DL-XX	0.000	
Factor dead weight	DL-YY	0.000	
Factor dead weight	DL-ZZ	0.000	
unfavourable safety factor		1.500	
favourable safety factor		0.000	
Combination coefficient ψ-0		0.750	(rare)
Combination coefficient ψ-1'		0.800	(non frequent)
Combination coefficient ψ-1		0.750	(frequent)
Combination coefficient ψ-2		0.200	(permanent)

Loads

Kind	**Referenceto**	**Projection W[m]**	**Coordinates X[m]**	**Y[m]**	**Z[m]**	**Type**	**Loadvalue**
Point			12.067	4.675	0.000	PG	50.0 [kN]
	gar 1100				activated		100.00 percent
Point			13.267	4.675	0.000	PG	50.0 [kN]
	gar 1100				activated		100.00 percent
Point			12.067	6.675	0.000	PG	50.0 [kN]
	gar 1100				activated		100.00 percent
Point			13.267	6.675	0.000	PG	50.0 [kN]
	gar 1100				activated		100.00 percent

Load Case 514 (L_1) K-EN-R

Factor forces and moments		1.000	
Factor dead weight	DL-XX	0.000	
Factor dead weight	DL-YY	0.000	
Factor dead weight	DL-ZZ	0.000	
unfavourable safety factor		1.500	
favourable safety factor		0.000	
Combination coefficient ψ-0		0.750	(rare)
Combination coefficient ψ-1'		0.800	(non frequent)
Combination coefficient ψ-1		0.750	(frequent)
Combination coefficient ψ-2		0.200	(permanent)

Loads

Kind	**Referenceto**	**Projection W[m]**	**Coordinates X[m]**	**Y[m]**	**Z[m]**	**Type**	**Loadvalue**
Point			16.289	4.675	0.000	PG	50.0 [kN]
	gar 1100				activated		100.00 percent
Point			17.489	4.675	0.000	PG	50.0 [kN]
	gar 1100				activated		100.00 percent
Point			16.289	6.675	0.000	PG	50.0 [kN]
	gar 1100				activated		100.00 percent
Point			17.489	6.675	0.000	PG	50.0 [kN]
	gar 1100				activated		100.00 percent

SOFiSTiK AG - www.sofistik.de

Composite bridge 38+50+38, b=14.25m, 2x2HL1100R HISTAR460 , slab 0.30m C30/37
Dead and moving loads

Load Case 515 (L_1) K-EN-R

Factor forces and moments		1.000	
Factor dead weight	DL-XX	0.000	
Factor dead weight	DL-YY	0.000	
Factor dead weight	DL-ZZ	0.000	
unfavourable safety factor		1.500	
favourable safety factor		0.000	
Combination coefficient ψ-0		0.750	(rare)
Combination coefficient ψ-1'		0.800	(non frequent)
Combination coefficient ψ-1		0.750	(frequent)
Combination coefficient ψ-2		0.200	(permanent)

Loads

Kind	Referenceto	Projection W[m]	Coordinates X[m]	Y[m]	Z[m]	Type	Loadvalue
Point			20.511	4.675	0.000	PG	50.0 [kN]
	gar	1100			activated		100.00 percent
Point			21.711	4.675	0.000	PG	50.0 [kN]
	gar	1100			activated		100.00 percent
Point			20.511	6.675	0.000	PG	50.0 [kN]
	gar	1100			activated		100.00 percent
Point			21.711	6.675	0.000	PG	50.0 [kN]
	gar	1100			activated		100.00 percent

Load Case 516 (L_1) K-EN-R

Factor forces and moments		1.000	
Factor dead weight	DL-XX	0.000	
Factor dead weight	DL-YY	0.000	
Factor dead weight	DL-ZZ	0.000	
unfavourable safety factor		1.500	
favourable safety factor		0.000	
Combination coefficient ψ-0		0.750	(rare)
Combination coefficient ψ-1'		0.800	(non frequent)
Combination coefficient ψ-1		0.750	(frequent)
Combination coefficient ψ-2		0.200	(permanent)

Loads

Kind	Referenceto	Projection W[m]	Coordinates X[m]	Y[m]	Z[m]	Type	Loadvalue
Point			24.733	4.675	0.000	PG	50.0 [kN]
	gar	1100			activated		100.00 percent
Point			25.933	4.675	0.000	PG	50.0 [kN]
	gar	1100			activated		100.00 percent
Point			24.733	6.675	0.000	PG	50.0 [kN]
	gar	1100			activated		100.00 percent
Point			25.933	6.675	0.000	PG	50.0 [kN]
	gar	1100			activated		100.00 percent

Load Case 517 (L_1) K-EN-R

Factor forces and moments		1.000	
Factor dead weight	DL-XX	0.000	
Factor dead weight	DL-YY	0.000	
Factor dead weight	DL-ZZ	0.000	
unfavourable safety factor		1.500	
favourable safety factor		0.000	
Combination coefficient ψ-0		0.750	(rare)
Combination coefficient ψ-1'		0.800	(non frequent)
Combination coefficient ψ-1		0.750	(frequent)
Combination coefficient ψ-2		0.200	(permanent)

Loads

Kind	Referenceto	Projection W[m]	Coordinates X[m]	Y[m]	Z[m]	Type	Loadvalue
Point			28.956	4.675	0.000	PG	50.0 [kN]
	gar	1100			activated		100.00 percent
Point			30.156	4.675	0.000	PG	50.0 [kN]

SOFiSTiK AG - www.sofistik.de

Composite bridge 38+50+38, b=14.25m, 2x2HL1100R HISTAR460 , slab 0.30m C30/37
Dead and moving loads

Loads

Kind	Referenceto	Projection W[m]	Coordinates X[m]	Y[m]	Z[m]	Type	Loadvalue
	gar 1100				activated		100.00 percent
Point			28.956	6.675	0.000	PG	50.0 [kN]
	gar 1100				activated		100.00 percent
Point			30.156	6.675	0.000	PG	50.0 [kN]
	gar 1100				activated		100.00 percent

Load Case 518 (L_1) K-EN-R

Factor forces and moments		1.000	
Factor dead weight	DL-XX	0.000	
Factor dead weight	DL-YY	0.000	
Factor dead weight	DL-ZZ	0.000	
unfavourable safety factor		1.500	
favourable safety factor		0.000	
Combination coefficient ψ-0		0.750	(rare)
Combination coefficient ψ-1'		0.800	(non frequent)
Combination coefficient ψ-1		0.750	(frequent)
Combination coefficient ψ-2		0.200	(permanent)

Loads

Kind	Referenceto	Projection W[m]	Coordinates X[m]	Y[m]	Z[m]	Type	Loadvalue
Point			33.178	4.675	0.000	PG	50.0 [kN]
	gar 1100				activated		100.00 percent
Point			34.378	4.675	0.000	PG	50.0 [kN]
	gar 1100				activated		100.00 percent
Point			33.178	6.675	0.000	PG	50.0 [kN]
	gar 1100				activated		100.00 percent
Point			34.378	6.675	0.000	PG	50.0 [kN]
	gar 1100				activated		100.00 percent

Load Case 519 (L_1) K-EN-R

Factor forces and moments		1.000	
Factor dead weight	DL-XX	0.000	
Factor dead weight	DL-YY	0.000	
Factor dead weight	DL-ZZ	0.000	
unfavourable safety factor		1.500	
favourable safety factor		0.000	
Combination coefficient ψ-0		0.750	(rare)
Combination coefficient ψ-1'		0.800	(non frequent)
Combination coefficient ψ-1		0.750	(frequent)
Combination coefficient ψ-2		0.200	(permanent)

Loads

Kind	Referenceto	Projection W[m]	Coordinates X[m]	Y[m]	Z[m]	Type	Loadvalue
Point			37.400	4.675	0.000	PG	50.0 [kN]
	gar 1100				activated		100.00 percent
Point			38.600	4.675	0.000	PG	50.0 [kN]
	gar 2100				activated		100.00 percent
Point			37.400	6.675	0.000	PG	50.0 [kN]
	gar 1100				activated		100.00 percent
Point			38.600	6.675	0.000	PG	50.0 [kN]
	gar 2100				activated		100.00 percent

SOFiSTiK AG - www.sofistik.de

Composite bridge 38+50+38, b=14.25m, 2x2HL1100R HISTAR460 , slab 0.30m C30/37
Dead and moving loads

Load Case 520 (L_1) K-EN-R

Factor forces and moments		1.000
Factor dead weight	DL-XX	0.000
Factor dead weight	DL-YY	0.000
Factor dead weight	DL-ZZ	0.000
unfavourable safety factor		1.500
favourable safety factor		0.000
Combination coefficient ψ-0		0.750 (rare)
Combination coefficient ψ-1'		0.800 (non frequent)
Combination coefficient ψ-1		0.750 (frequent)
Combination coefficient ψ-2		0.200 (permanent)

Loads

Kind	Referenceto	Projection W[m]	Coordinates X[m]	Y[m]	Z[m]	Type	Loadvalue
Point			37.400	4.675	0.000	PG	50.0 [kN]
	gar 1100				activated		100.00 percent
Point			38.600	4.675	0.000	PG	50.0 [kN]
	gar 2100				activated		100.00 percent
Point			37.400	6.675	0.000	PG	50.0 [kN]
	gar 1100				activated		100.00 percent
Point			38.600	6.675	0.000	PG	50.0 [kN]
	gar 2100				activated		100.00 percent

Load Case 521 (L_1) K-EN-R

Factor forces and moments		1.000
Factor dead weight	DL-XX	0.000
Factor dead weight	DL-YY	0.000
Factor dead weight	DL-ZZ	0.000
unfavourable safety factor		1.500
favourable safety factor		0.000
Combination coefficient ψ-0		0.750 (rare)
Combination coefficient ψ-1'		0.800 (non frequent)
Combination coefficient ψ-1		0.750 (frequent)
Combination coefficient ψ-2		0.200 (permanent)

Loads

Kind	Referenceto	Projection W[m]	Coordinates X[m]	Y[m]	Z[m]	Type	Loadvalue
Point			42.956	4.675	0.000	PG	50.0 [kN]
	gar 2100				activated		100.00 percent
Point			44.156	4.675	0.000	PG	50.0 [kN]
	gar 2100				activated		100.00 percent
Point			42.956	6.675	0.000	PG	50.0 [kN]
	gar 2100				activated		100.00 percent
Point			44.156	6.675	0.000	PG	50.0 [kN]
	gar 2100				activated		100.00 percent

Load Case 522 (L_1) K-EN-R

Factor forces and moments		1.000
Factor dead weight	DL-XX	0.000
Factor dead weight	DL-YY	0.000
Factor dead weight	DL-ZZ	0.000
unfavourable safety factor		1.500
favourable safety factor		0.000
Combination coefficient ψ-0		0.750 (rare)
Combination coefficient ψ-1'		0.800 (non frequent)
Combination coefficient ψ-1		0.750 (frequent)
Combination coefficient ψ-2		0.200 (permanent)

Loads

Kind	Referenceto	Projection W[m]	Coordinates X[m]	Y[m]	Z[m]	Type	Loadvalue
Point			48.511	4.675	0.000	PG	50.0 [kN]
	gar 2100				activated		100.00 percent
Point			49.711	4.675	0.000	PG	50.0 [kN]

SOFiSTiK AG - www.sofistik.de

Composite bridge 38+50+38, b=14.25m, 2x2HL1100R HISTAR460 , slab 0.30m C30/37
Dead and moving loads

Loads

Kind	**Referenceto**	**Projection W[m]**	**Coordinates X[m]**	**Y[m]**	**Z[m]**	**Type**	**Loadvalue**
	gar 2100				activated		100.00 percent
Point			48.511	6.675	0.000	PG	50.0 [kN]
	gar 2100				activated		100.00 percent
Point			49.711	6.675	0.000	PG	50.0 [kN]
	gar 2100				activated		100.00 percent

Load Case 523 (L_1) K-EN-R

Factor forces and moments		1.000	
Factor dead weight	DL-XX	0.000	
Factor dead weight	DL-YY	0.000	
Factor dead weight	DL-ZZ	0.000	
unfavourable safety factor		1.500	
favourable safety factor		0.000	
Combination coefficient ψ-0		0.750	(rare)
Combination coefficient ψ-1'		0.800	(non frequent)
Combination coefficient ψ-1		0.750	(frequent)
Combination coefficient ψ-2		0.200	(permanent)

Loads

Kind	**Referenceto**	**Projection W[m]**	**Coordinates X[m]**	**Y[m]**	**Z[m]**	**Type**	**Loadvalue**
Point			54.067	4.675	0.000	PG	50.0 [kN]
	gar 2100				activated		100.00 percent
Point			55.267	4.675	0.000	PG	50.0 [kN]
	gar 2100				activated		100.00 percent
Point			54.067	6.675	0.000	PG	50.0 [kN]
	gar 2100				activated		100.00 percent
Point			55.267	6.675	0.000	PG	50.0 [kN]
	gar 2100				activated		100.00 percent

Load Case 524 (L_1) K-EN-R

Factor forces and moments		1.000	
Factor dead weight	DL-XX	0.000	
Factor dead weight	DL-YY	0.000	
Factor dead weight	DL-ZZ	0.000	
unfavourable safety factor		1.500	
favourable safety factor		0.000	
Combination coefficient ψ-0		0.750	(rare)
Combination coefficient ψ-1'		0.800	(non frequent)
Combination coefficient ψ-1		0.750	(frequent)
Combination coefficient ψ-2		0.200	(permanent)

Loads

Kind	**Referenceto**	**Projection W[m]**	**Coordinates X[m]**	**Y[m]**	**Z[m]**	**Type**	**Loadvalue**
Point			59.622	4.675	0.000	PG	50.0 [kN]
	gar 2100				activated		100.00 percent
Point			60.822	4.675	0.000	PG	50.0 [kN]
	gar 2100				activated		100.00 percent
Point			59.622	6.675	0.000	PG	50.0 [kN]
	gar 2100				activated		100.00 percent
Point			60.822	6.675	0.000	PG	50.0 [kN]
	gar 2100				activated		100.00 percent

SOFiSTiK AG - www.sofistik.de

Composite bridge 38+50+38, b=14.25m, 2x2HL1100R HISTAR460 , slab 0.30m C30/37
Dead and moving loads

Load Case 525 (L_1) K-EN-R

Factor forces and moments		1.000
Factor dead weight	DL-XX	0.000
Factor dead weight	DL-YY	0.000
Factor dead weight	DL-ZZ	0.000
unfavourable safety factor		1.500
favourable safety factor		0.000
Combination coefficient ψ-0		0.750 (rare)
Combination coefficient ψ-1'		0.800 (non frequent)
Combination coefficient ψ-1		0.750 (frequent)
Combination coefficient ψ-2		0.200 (permanent)

Loads

Kind	Referenceto	Projection W[m]	Coordinates X[m]	Y[m]	Z[m]	Type	Loadvalue
Point			65.178	4.675	0.000	PG	50.0 [kN]
	gar	2100			activated		100.00 percent
Point			66.378	4.675	0.000	PG	50.0 [kN]
	gar	2100			activated		100.00 percent
Point			65.178	6.675	0.000	PG	50.0 [kN]
	gar	2100			activated		100.00 percent
Point			66.378	6.675	0.000	PG	50.0 [kN]
	gar	2100			activated		100.00 percent

Load Case 526 (L_1) K-EN-R

Factor forces and moments		1.000
Factor dead weight	DL-XX	0.000
Factor dead weight	DL-YY	0.000
Factor dead weight	DL-ZZ	0.000
unfavourable safety factor		1.500
favourable safety factor		0.000
Combination coefficient ψ-0		0.750 (rare)
Combination coefficient ψ-1'		0.800 (non frequent)
Combination coefficient ψ-1		0.750 (frequent)
Combination coefficient ψ-2		0.200 (permanent)

Loads

Kind	Referenceto	Projection W[m]	Coordinates X[m]	Y[m]	Z[m]	Type	Loadvalue
Point			70.733	4.675	0.000	PG	50.0 [kN]
	gar	2100			activated		100.00 percent
Point			71.933	4.675	0.000	PG	50.0 [kN]
	gar	2100			activated		100.00 percent
Point			70.733	6.675	0.000	PG	50.0 [kN]
	gar	2100			activated		100.00 percent
Point			71.933	6.675	0.000	PG	50.0 [kN]
	gar	2100			activated		100.00 percent

Load Case 527 (L_1) K-EN-R

Factor forces and moments		1.000
Factor dead weight	DL-XX	0.000
Factor dead weight	DL-YY	0.000
Factor dead weight	DL-ZZ	0.000
unfavourable safety factor		1.500
favourable safety factor		0.000
Combination coefficient ψ-0		0.750 (rare)
Combination coefficient ψ-1'		0.800 (non frequent)
Combination coefficient ψ-1		0.750 (frequent)
Combination coefficient ψ-2		0.200 (permanent)

Loads

Kind	Referenceto	Projection W[m]	Coordinates X[m]	Y[m]	Z[m]	Type	Loadvalue
Point			76.289	4.675	0.000	PG	50.0 [kN]
	gar	2100			activated		100.00 percent
Point			77.489	4.675	0.000	PG	50.0 [kN]

SOFiSTiK AG - www.sofistik.de

Composite bridge 38+50+38, b=14.25m, 2x2HL1100R HISTAR460 , slab 0.30m C30/37
Dead and moving loads

Loads

Kind	Referenceto	Projection W[m]	Coordinates X[m]	Y[m]	Z[m]	Type	Loadvalue
	gar 2100				activated		100.00 percent
Point			76.289	6.675	0.000	PG	50.0 [kN]
	gar 2100				activated		100.00 percent
Point			77.489	6.675	0.000	PG	50.0 [kN]
	gar 2100				activated		100.00 percent

Load Case 528 (L_1) K-EN-R

Factor forces and moments		1.000	
Factor dead weight	DL-XX	0.000	
Factor dead weight	DL-YY	0.000	
Factor dead weight	DL-ZZ	0.000	
unfavourable safety factor		1.500	
favourable safety factor		0.000	
Combination coefficient ψ-0		0.750	(rare)
Combination coefficient ψ-1'		0.800	(non frequent)
Combination coefficient ψ-1		0.750	(frequent)
Combination coefficient ψ-2		0.200	(permanent)

Loads

Kind	Referenceto	Projection W[m]	Coordinates X[m]	Y[m]	Z[m]	Type	Loadvalue
Point			81.844	4.675	0.000	PG	50.0 [kN]
	gar 2100				activated		100.00 percent
Point			83.044	4.675	0.000	PG	50.0 [kN]
	gar 2100				activated		100.00 percent
Point			81.844	6.675	0.000	PG	50.0 [kN]
	gar 2100				activated		100.00 percent
Point			83.044	6.675	0.000	PG	50.0 [kN]
	gar 2100				activated		100.00 percent

Load Case 529 (L_1) K-EN-R

Factor forces and moments		1.000	
Factor dead weight	DL-XX	0.000	
Factor dead weight	DL-YY	0.000	
Factor dead weight	DL-ZZ	0.000	
unfavourable safety factor		1.500	
favourable safety factor		0.000	
Combination coefficient ψ-0		0.750	(rare)
Combination coefficient ψ-1'		0.800	(non frequent)
Combination coefficient ψ-1		0.750	(frequent)
Combination coefficient ψ-2		0.200	(permanent)

Loads

Kind	Referenceto	Projection W[m]	Coordinates X[m]	Y[m]	Z[m]	Type	Loadvalue
Point			87.400	4.675	0.000	PG	50.0 [kN]
	gar 2100				activated		100.00 percent
Point			88.600	4.675	0.000	PG	50.0 [kN]
	gar 3100				activated		100.00 percent
Point			87.400	6.675	0.000	PG	50.0 [kN]
	gar 2100				activated		100.00 percent
Point			88.600	6.675	0.000	PG	50.0 [kN]
	gar 3100				activated		100.00 percent

SOFiSTiK AG - www.sofistik.de

Composite bridge 38+50+38, b=14.25m, 2x2HL1100R HISTAR460 , slab 0.30m C30/37
Dead and moving loads

Load Case 530 (L_1) K-EN-R

Factor forces and moments		1.000
Factor dead weight	DL-XX	0.000
Factor dead weight	DL-YY	0.000
Factor dead weight	DL-ZZ	0.000
unfavourable safety factor		1.500
favourable safety factor		0.000
Combination coefficient ψ-0		0.750 (rare)
Combination coefficient ψ-1'		0.800 (non frequent)
Combination coefficient ψ-1		0.750 (frequent)
Combination coefficient ψ-2		0.200 (permanent)

Loads

Kind	Referenceto	Projection W[m]	Coordinates X[m]	Y[m]	Z[m]	Type	Loadvalue
Point			87.400	4.675	0.000	PG	50.0 [kN]
	gar	2100			activated		100.00 percent
Point			88.600	4.675	0.000	PG	50.0 [kN]
	gar	3100			activated		100.00 percent
Point			87.400	6.675	0.000	PG	50.0 [kN]
	gar	2100			activated		100.00 percent
Point			88.600	6.675	0.000	PG	50.0 [kN]
	gar	3100			activated		100.00 percent

Load Case 531 (L_1) K-EN-R

Factor forces and moments		1.000
Factor dead weight	DL-XX	0.000
Factor dead weight	DL-YY	0.000
Factor dead weight	DL-ZZ	0.000
unfavourable safety factor		1.500
favourable safety factor		0.000
Combination coefficient ψ-0		0.750 (rare)
Combination coefficient ψ-1'		0.800 (non frequent)
Combination coefficient ψ-1		0.750 (frequent)
Combination coefficient ψ-2		0.200 (permanent)

Loads

Kind	Referenceto	Projection W[m]	Coordinates X[m]	Y[m]	Z[m]	Type	Loadvalue
Point			91.622	4.675	0.000	PG	50.0 [kN]
	gar	3100			activated		100.00 percent
Point			92.822	4.675	0.000	PG	50.0 [kN]
	gar	3100			activated		100.00 percent
Point			91.622	6.675	0.000	PG	50.0 [kN]
	gar	3100			activated		100.00 percent
Point			92.822	6.675	0.000	PG	50.0 [kN]
	gar	3100			activated		100.00 percent

Load Case 532 (L_1) K-EN-R

Factor forces and moments		1.000
Factor dead weight	DL-XX	0.000
Factor dead weight	DL-YY	0.000
Factor dead weight	DL-ZZ	0.000
unfavourable safety factor		1.500
favourable safety factor		0.000
Combination coefficient ψ-0		0.750 (rare)
Combination coefficient ψ-1'		0.800 (non frequent)
Combination coefficient ψ-1		0.750 (frequent)
Combination coefficient ψ-2		0.200 (permanent)

Loads

Kind	Referenceto	Projection W[m]	Coordinates X[m]	Y[m]	Z[m]	Type	Loadvalue
Point			95.844	4.675	0.000	PG	50.0 [kN]
	gar	3100			activated		100.00 percent
Point			97.044	4.675	0.000	PG	50.0 [kN]

SOFiSTiK AG - www.sofistik.de

Composite bridge 38+50+38, b=14.25m, 2x2HL1100R HISTAR460 , slab 0.30m C30/37
Dead and moving loads

Loads

Kind	Referenceto	Projection W[m]	Coordinates X[m]	Y[m]	Z[m]	Type	Loadvalue
	gar	3100			activated		100.00 percent
Point			95.844	6.675	0.000	PG	50.0 [kN]
	gar	3100			activated		100.00 percent
Point			97.044	6.675	0.000	PG	50.0 [kN]
	gar	3100			activated		100.00 percent

Load Case 533 (L_1) K-EN-R

Factor forces and moments		1.000	
Factor dead weight	DL-XX	0.000	
Factor dead weight	DL-YY	0.000	
Factor dead weight	DL-ZZ	0.000	
unfavourable safety factor		1.500	
favourable safety factor		0.000	
Combination coefficient ψ-0		0.750	(rare)
Combination coefficient ψ-1'		0.800	(non frequent)
Combination coefficient ψ-1		0.750	(frequent)
Combination coefficient ψ-2		0.200	(permanent)

Loads

Kind	Referenceto	Projection W[m]	Coordinates X[m]	Y[m]	Z[m]	Type	Loadvalue
Point			100.067	4.675	0.000	PG	50.0 [kN]
	gar	3100			activated		100.00 percent
Point			101.267	4.675	0.000	PG	50.0 [kN]
	gar	3100			activated		100.00 percent
Point			100.067	6.675	0.000	PG	50.0 [kN]
	gar	3100			activated		100.00 percent
Point			101.267	6.675	0.000	PG	50.0 [kN]
	gar	3100			activated		100.00 percent

Load Case 534 (L_1) K-EN-R

Factor forces and moments		1.000	
Factor dead weight	DL-XX	0.000	
Factor dead weight	DL-YY	0.000	
Factor dead weight	DL-ZZ	0.000	
unfavourable safety factor		1.500	
favourable safety factor		0.000	
Combination coefficient ψ-0		0.750	(rare)
Combination coefficient ψ-1'		0.800	(non frequent)
Combination coefficient ψ-1		0.750	(frequent)
Combination coefficient ψ-2		0.200	(permanent)

Loads

Kind	Referenceto	Projection W[m]	Coordinates X[m]	Y[m]	Z[m]	Type	Loadvalue
Point			104.289	4.675	0.000	PG	50.0 [kN]
	gar	3100			activated		100.00 percent
Point			105.489	4.675	0.000	PG	50.0 [kN]
	gar	3100			activated		100.00 percent
Point			104.289	6.675	0.000	PG	50.0 [kN]
	gar	3100			activated		100.00 percent
Point			105.489	6.675	0.000	PG	50.0 [kN]
	gar	3100			activated		100.00 percent

SOFiSTiK AG - www.sofistik.de

Composite bridge 38+50+38, b=14.25m, 2x2HL1100R HISTAR460 , slab 0.30m C30/37
Dead and moving loads

Load Case 535 (L_1) K-EN-R

Factor forces and moments		1.000	
Factor dead weight	DL-XX	0.000	
Factor dead weight	DL-YY	0.000	
Factor dead weight	DL-ZZ	0.000	
unfavourable safety factor		1.500	
favourable safety factor		0.000	
Combination coefficient ψ-0		0.750	(rare)
Combination coefficient ψ-1'		0.800	(non frequent)
Combination coefficient ψ-1		0.750	(frequent)
Combination coefficient ψ-2		0.200	(permanent)

Loads

Kind	Referenceto	Projection W[m]	Coordinates X[m]	Y[m]	Z[m]	Type	Loadvalue
Point			108.511	4.675	0.000	PG	50.0 [kN]
	gar	3100			activated		100.00 percent
Point			109.711	4.675	0.000	PG	50.0 [kN]
	gar	3100			activated		100.00 percent
Point			108.511	6.675	0.000	PG	50.0 [kN]
	gar	3100			activated		100.00 percent
Point			109.711	6.675	0.000	PG	50.0 [kN]
	gar	3100			activated		100.00 percent

Load Case 536 (L_1) K-EN-R

Factor forces and moments		1.000	
Factor dead weight	DL-XX	0.000	
Factor dead weight	DL-YY	0.000	
Factor dead weight	DL-ZZ	0.000	
unfavourable safety factor		1.500	
favourable safety factor		0.000	
Combination coefficient ψ-0		0.750	(rare)
Combination coefficient ψ-1'		0.800	(non frequent)
Combination coefficient ψ-1		0.750	(frequent)
Combination coefficient ψ-2		0.200	(permanent)

Loads

Kind	Referenceto	Projection W[m]	Coordinates X[m]	Y[m]	Z[m]	Type	Loadvalue
Point			112.733	4.675	0.000	PG	50.0 [kN]
	gar	3100			activated		100.00 percent
Point			113.933	4.675	0.000	PG	50.0 [kN]
	gar	3100			activated		100.00 percent
Point			112.733	6.675	0.000	PG	50.0 [kN]
	gar	3100			activated		100.00 percent
Point			113.933	6.675	0.000	PG	50.0 [kN]
	gar	3100			activated		100.00 percent

Load Case 537 (L_1) K-EN-R

Factor forces and moments		1.000	
Factor dead weight	DL-XX	0.000	
Factor dead weight	DL-YY	0.000	
Factor dead weight	DL-ZZ	0.000	
unfavourable safety factor		1.500	
favourable safety factor		0.000	
Combination coefficient ψ-0		0.750	(rare)
Combination coefficient ψ-1'		0.800	(non frequent)
Combination coefficient ψ-1		0.750	(frequent)
Combination coefficient ψ-2		0.200	(permanent)

Loads

Kind	Referenceto	Projection W[m]	Coordinates X[m]	Y[m]	Z[m]	Type	Loadvalue
Point			116.956	4.675	0.000	PG	50.0 [kN]
	gar	3100			activated		100.00 percent
Point			118.156	4.675	0.000	PG	50.0 [kN]

SOFiSTiK AG - www.sofistik.de

Composite bridge 38+50+38, b=14.25m, 2x2HL1100R HISTAR460 , slab 0.30m C30/37
Dead and moving loads

Loads

Kind	Referenceto	Projection W[m]	Coordinates X[m]	Y[m]	Z[m]	Type	Loadvalue
	gar 3100			activated			100.00 percent
Point			116.956	6.675	0.000	PG	50.0 [kN]
	gar 3100			activated			100.00 percent
Point			118.156	6.675	0.000	PG	50.0 [kN]
	gar 3100			activated			100.00 percent

Load Case 538 (L_1) K-EN-R

Factor forces and moments		1.000	
Factor dead weight	DL-XX	0.000	
Factor dead weight	DL-YY	0.000	
Factor dead weight	DL-ZZ	0.000	
unfavourable safety factor		1.500	
favourable safety factor		0.000	
Combination coefficient ψ-0		0.750	(rare)
Combination coefficient ψ-1'		0.800	(non frequent)
Combination coefficient ψ-1		0.750	(frequent)
Combination coefficient ψ-2		0.200	(permanent)

Loads

Kind	Referenceto	Projection W[m]	Coordinates X[m]	Y[m]	Z[m]	Type	Loadvalue
Point			121.178	4.675	0.000	PG	50.0 [kN]
	gar 3100			activated			100.00 percent
Point			122.378	4.675	0.000	PG	50.0 [kN]
	gar 3100			activated			100.00 percent
Point			121.178	6.675	0.000	PG	50.0 [kN]
	gar 3100			activated			100.00 percent
Point			122.378	6.675	0.000	PG	50.0 [kN]
	gar 3100			activated			100.00 percent

Load Case 539 (L_1) K-EN-R

Factor forces and moments		1.000	
Factor dead weight	DL-XX	0.000	
Factor dead weight	DL-YY	0.000	
Factor dead weight	DL-ZZ	0.000	
unfavourable safety factor		1.500	
favourable safety factor		0.000	
Combination coefficient ψ-0		0.750	(rare)
Combination coefficient ψ-1'		0.800	(non frequent)
Combination coefficient ψ-1		0.750	(frequent)
Combination coefficient ψ-2		0.200	(permanent)

Loads

Kind	Referenceto	Projection W[m]	Coordinates X[m]	Y[m]	Z[m]	Type	Loadvalue
Point			125.400	4.675	0.000	PG	50.0 [kN]
	gar 3100			activated			100.00 percent
Point			126.600	4.675	0.000	PG	50.0 [kN]
	auto ????		(--)	activated			0.00 percent
Point			125.400	6.675	0.000	PG	50.0 [kN]
	gar 3100			activated			100.00 percent
Point			126.600	6.675	0.000	PG	50.0 [kN]
	auto ????		(--)	activated			0.00 percent

SOFiSTiK AG - www.sofistik.de

Composite bridge 38+50+38, b=14.25m, 2x2HL1100R HISTAR460 , slab 0.30m C30/37
Dead and moving loads

Load Case 711 (Q_1) q2.5-lane1-R

Factor forces and moments		1.000	
Factor dead weight	DL-XX	0.000	
Factor dead weight	DL-YY	0.000	
Factor dead weight	DL-ZZ	0.000	
unfavourable safety factor		1.500	
favourable safety factor		0.000	
Combination coefficient ψ-0		0.750	(rare)
Combination coefficient ψ-1'		0.800	(non frequent)
Combination coefficient ψ-1		0.750	(frequent)
Combination coefficient ψ-2		0.200	(permanent)

Loads

Kind	Referenceto	Projection W[m]	Coordinates X[m]	Y[m]	Z[m]	Type	Loadvalue
Area			0.000	10.175	0.000	Pz	2.50 [kN/m2]
			38.000	10.175	0.000		2.50 [kN/m2]
			38.000	7.175	0.000		2.50 [kN/m2]
			0.000	7.175	0.000		2.50 [kN/m2]
	gar -mult-				activated		100.00 percent

Load Case 712 (Q_1) q2.5-lane2-R

Factor forces and moments		1.000	
Factor dead weight	DL-XX	0.000	
Factor dead weight	DL-YY	0.000	
Factor dead weight	DL-ZZ	0.000	
unfavourable safety factor		1.500	
favourable safety factor		0.000	
Combination coefficient ψ-0		0.750	(rare)
Combination coefficient ψ-1'		0.800	(non frequent)
Combination coefficient ψ-1		0.750	(frequent)
Combination coefficient ψ-2		0.200	(permanent)

Loads

Kind	Referenceto	Projection W[m]	Coordinates X[m]	Y[m]	Z[m]	Type	Loadvalue
Area			0.000	7.175	0.000	Pz	2.50 [kN/m2]
			38.000	7.175	0.000		2.50 [kN/m2]
			38.000	4.175	0.000		2.50 [kN/m2]
			0.000	4.175	0.000		2.50 [kN/m2]
	gar 1100				activated		100.00 percent

Load Case 714 (Q_1) q2.5-remain-R

Factor forces and moments		1.000	
Factor dead weight	DL-XX	0.000	
Factor dead weight	DL-YY	0.000	
Factor dead weight	DL-ZZ	0.000	
unfavourable safety factor		1.500	
favourable safety factor		0.000	
Combination coefficient ψ-0		0.750	(rare)
Combination coefficient ψ-1'		0.800	(non frequent)
Combination coefficient ψ-1		0.750	(frequent)
Combination coefficient ψ-2		0.200	(permanent)

Loads

Kind	Referenceto	Projection W[m]	Coordinates X[m]	Y[m]	Z[m]	Type	Loadvalue
Area			0.000	4.175	0.000	Pz	2.50 [kN/m2]
			38.000	4.175	0.000		2.50 [kN/m2]
			38.000	1.575	0.000		2.50 [kN/m2]
			0.000	1.575	0.000		2.50 [kN/m2]
	gar 1100				activated		100.00 percent

SOFiSTiK AG - www.sofistik.de

Composite bridge 38+50+38, b=14.25m, 2x2HL1100R HISTAR460 , slab 0.30m C30/37
Dead and moving loads

Load Case 715 (Q_1) deltaq6.5-lane1-R

Factor forces and moments		1.000	
Factor dead weight	DL-XX	0.000	
Factor dead weight	DL-YY	0.000	
Factor dead weight	DL-ZZ	0.000	
unfavourable safety factor		1.500	
favourable safety factor		0.000	
Combination coefficient ψ-0		0.750	(rare)
Combination coefficient ψ-1'		0.800	(non frequent)
Combination coefficient ψ-1		0.750	(frequent)
Combination coefficient ψ-2		0.200	(permanent)

Loads

Kind	Referenceto	Projection W[m]	Coordinates X[m]	Y[m]	Z[m]	Type	Loadvalue
Area			0.000	10.175	0.000	Pz	6.50 [kN/m2]
			38.000	10.175	0.000		6.50 [kN/m2]
			38.000	7.175	0.000		6.50 [kN/m2]
			0.000	7.175	0.000		6.50 [kN/m2]
	gar -mult-				activated		100.00 percent

Load Case 716 (Q_1) deltaq6.5-lane2-R

Factor forces and moments		1.000	
Factor dead weight	DL-XX	0.000	
Factor dead weight	DL-YY	0.000	
Factor dead weight	DL-ZZ	0.000	
unfavourable safety factor		1.500	
favourable safety factor		0.000	
Combination coefficient ψ-0		0.750	(rare)
Combination coefficient ψ-1'		0.800	(non frequent)
Combination coefficient ψ-1		0.750	(frequent)
Combination coefficient ψ-2		0.200	(permanent)

Loads

Kind	Referenceto	Projection W[m]	Coordinates X[m]	Y[m]	Z[m]	Type	Loadvalue
Area			0.000	7.175	0.000	Pz	6.50 [kN/m2]
			38.000	7.175	0.000		6.50 [kN/m2]
			38.000	4.175	0.000		6.50 [kN/m2]
			0.000	4.175	0.000		6.50 [kN/m2]
	gar 1100				activated		100.00 percent

Load Case 721 (Q_1) q2.5-lane1-R

Factor forces and moments		1.000	
Factor dead weight	DL-XX	0.000	
Factor dead weight	DL-YY	0.000	
Factor dead weight	DL-ZZ	0.000	
unfavourable safety factor		1.500	
favourable safety factor		0.000	
Combination coefficient ψ-0		0.750	(rare)
Combination coefficient ψ-1'		0.800	(non frequent)
Combination coefficient ψ-1		0.750	(frequent)
Combination coefficient ψ-2		0.200	(permanent)

Loads

Kind	Referenceto	Projection W[m]	Coordinates X[m]	Y[m]	Z[m]	Type	Loadvalue
Area			38.000	10.175	0.000	Pz	2.50 [kN/m2]
			88.000	10.175	0.000		2.50 [kN/m2]
			88.000	7.175	0.000		2.50 [kN/m2]
			38.000	7.175	0.000		2.50 [kN/m2]
	gar -mult-				activated		100.00 percent

SOFiSTiK AG - www.sofistik.de

Composite bridge 38+50+38, b=14.25m, 2x2HL1100R HISTAR460 , slab 0.30m C30/37
Dead and moving loads

Load Case 722 (Q_1) q2.5-lane2-R

Factor forces and moments		1.000	
Factor dead weight	DL-XX	0.000	
Factor dead weight	DL-YY	0.000	
Factor dead weight	DL-ZZ	0.000	
unfavourable safety factor		1.500	
favourable safety factor		0.000	
Combination coefficient ψ-0		0.750	(rare)
Combination coefficient ψ-1'		0.800	(non frequent)
Combination coefficient ψ-1		0.750	(frequent)
Combination coefficient ψ-2		0.200	(permanent)

Loads

Kind	Referenceto	Projection W[m]	Coordinates X[m]	Y[m]	Z[m]	Type	Loadvalue
Area			38.000	7.175	0.000	Pz	2.50 [kN/m2]
			88.000	7.175	0.000		2.50 [kN/m2]
			88.000	4.175	0.000		2.50 [kN/m2]
			38.000	4.175	0.000		2.50 [kN/m2]
	gar	2100			activated		100.00 percent

Load Case 724 (Q_1) q2.5-remain-R

Factor forces and moments		1.000	
Factor dead weight	DL-XX	0.000	
Factor dead weight	DL-YY	0.000	
Factor dead weight	DL-ZZ	0.000	
unfavourable safety factor		1.500	
favourable safety factor		0.000	
Combination coefficient ψ-0		0.750	(rare)
Combination coefficient ψ-1'		0.800	(non frequent)
Combination coefficient ψ-1		0.750	(frequent)
Combination coefficient ψ-2		0.200	(permanent)

Loads

Kind	Referenceto	Projection W[m]	Coordinates X[m]	Y[m]	Z[m]	Type	Loadvalue
Area			38.000	4.175	0.000	Pz	2.50 [kN/m2]
			88.000	4.175	0.000		2.50 [kN/m2]
			88.000	1.575	0.000		2.50 [kN/m2]
			38.000	1.575	0.000		2.50 [kN/m2]
	gar	2100			activated		100.00 percent

Load Case 725 (Q_1) deltaq6.5-lane1-R

Factor forces and moments		1.000	
Factor dead weight	DL-XX	0.000	
Factor dead weight	DL-YY	0.000	
Factor dead weight	DL-ZZ	0.000	
unfavourable safety factor		1.500	
favourable safety factor		0.000	
Combination coefficient ψ-0		0.750	(rare)
Combination coefficient ψ-1'		0.800	(non frequent)
Combination coefficient ψ-1		0.750	(frequent)
Combination coefficient ψ-2		0.200	(permanent)

Loads

Kind	Referenceto	Projection W[m]	Coordinates X[m]	Y[m]	Z[m]	Type	Loadvalue
Area			38.000	10.175	0.000	Pz	6.50 [kN/m2]
			88.000	10.175	0.000		6.50 [kN/m2]
			88.000	7.175	0.000		6.50 [kN/m2]
			38.000	7.175	0.000		6.50 [kN/m2]
	gar	-mult-			activated		100.00 percent

SOFiSTiK AG - www.sofistik.de

Composite bridge 38+50+38, b=14.25m, 2x2HL1100R HISTAR460 , slab 0.30m C30/37
Dead and moving loads

Load Case 726 (Q_1) deltaq6.5-lane2-R

Factor forces and moments		1.000	
Factor dead weight	DL-XX	0.000	
Factor dead weight	DL-YY	0.000	
Factor dead weight	DL-ZZ	0.000	
unfavourable safety factor		1.500	
favourable safety factor		0.000	
Combination coefficient ψ-0		0.750	(rare)
Combination coefficient ψ-1'		0.800	(non frequent)
Combination coefficient ψ-1		0.750	(frequent)
Combination coefficient ψ-2		0.200	(permanent)

Loads

Kind	Referenceto	Projection W[m]	Coordinates X[m]	Y[m]	Z[m]	Type	Loadvalue
Area			38.000	7.175	0.000	Pz	6.50 [kN/m2]
			88.000	7.175	0.000		6.50 [kN/m2]
			88.000	4.175	0.000		6.50 [kN/m2]
			38.000	4.175	0.000		6.50 [kN/m2]
	gar	2100			activated		100.00 percent

Load Case 731 (Q_1) q2.5-lane1-R

Factor forces and moments		1.000	
Factor dead weight	DL-XX	0.000	
Factor dead weight	DL-YY	0.000	
Factor dead weight	DL-ZZ	0.000	
unfavourable safety factor		1.500	
favourable safety factor		0.000	
Combination coefficient ψ-0		0.750	(rare)
Combination coefficient ψ-1'		0.800	(non frequent)
Combination coefficient ψ-1		0.750	(frequent)
Combination coefficient ψ-2		0.200	(permanent)

Loads

Kind	Referenceto	Projection W[m]	Coordinates X[m]	Y[m]	Z[m]	Type	Loadvalue
Area			88.000	10.175	0.000	Pz	2.50 [kN/m2]
			126.000	10.175	0.000		2.50 [kN/m2]
			126.000	7.175	0.000		2.50 [kN/m2]
			88.000	7.175	0.000		2.50 [kN/m2]
	gar	-mult-			activated		100.00 percent

Load Case 732 (Q_1) q2.5-lane2-R

Factor forces and moments		1.000	
Factor dead weight	DL-XX	0.000	
Factor dead weight	DL-YY	0.000	
Factor dead weight	DL-ZZ	0.000	
unfavourable safety factor		1.500	
favourable safety factor		0.000	
Combination coefficient ψ-0		0.750	(rare)
Combination coefficient ψ-1'		0.800	(non frequent)
Combination coefficient ψ-1		0.750	(frequent)
Combination coefficient ψ-2		0.200	(permanent)

Loads

Kind	Referenceto	Projection W[m]	Coordinates X[m]	Y[m]	Z[m]	Type	Loadvalue
Area			88.000	7.175	0.000	Pz	2.50 [kN/m2]
			126.000	7.175	0.000		2.50 [kN/m2]
			126.000	4.175	0.000		2.50 [kN/m2]
			88.000	4.175	0.000		2.50 [kN/m2]
	gar	3100			activated		100.00 percent

SOFiSTiK AG - www.sofistik.de

Composite bridge 38+50+38, b=14.25m, 2x2HL1100R HISTAR460 , slab 0.30m C30/37
Dead and moving loads

Load Case 734 (Q_1) q2.5-remain-R

Factor forces and moments		1.000	
Factor dead weight	DL-XX	0.000	
Factor dead weight	DL-YY	0.000	
Factor dead weight	DL-ZZ	0.000	
unfavourable safety factor		1.500	
favourable safety factor		0.000	
Combination coefficient ψ-0		0.750	(rare)
Combination coefficient ψ-1'		0.800	(non frequent)
Combination coefficient ψ-1		0.750	(frequent)
Combination coefficient ψ-2		0.200	(permanent)

Loads

Kind	Referenceto	Projection W[m]	Coordinates X[m]	Y[m]	Z[m]	Type	Loadvalue
Area			88.000	4.175	0.000	Pz	2.50 [kN/m2]
			126.000	4.175	0.000		2.50 [kN/m2]
			126.000	1.575	0.000		2.50 [kN/m2]
			88.000	1.575	0.000		2.50 [kN/m2]
	gar	3100			activated		100.00 percent

Load Case 735 (Q_1) deltaq6.5-lane1-R

Factor forces and moments		1.000	
Factor dead weight	DL-XX	0.000	
Factor dead weight	DL-YY	0.000	
Factor dead weight	DL-ZZ	0.000	
unfavourable safety factor		1.500	
favourable safety factor		0.000	
Combination coefficient ψ-0		0.750	(rare)
Combination coefficient ψ-1'		0.800	(non frequent)
Combination coefficient ψ-1		0.750	(frequent)
Combination coefficient ψ-2		0.200	(permanent)

Loads

Kind	Referenceto	Projection W[m]	Coordinates X[m]	Y[m]	Z[m]	Type	Loadvalue
Area			88.000	10.175	0.000	Pz	6.50 [kN/m2]
			126.000	10.175	0.000		6.50 [kN/m2]
			126.000	7.175	0.000		6.50 [kN/m2]
			88.000	7.175	0.000		6.50 [kN/m2]
	gar	-mult-			activated		100.00 percent

Load Case 736 (Q_1) deltaq6.5-lane2-R

Factor forces and moments		1.000	
Factor dead weight	DL-XX	0.000	
Factor dead weight	DL-YY	0.000	
Factor dead weight	DL-ZZ	0.000	
unfavourable safety factor		1.500	
favourable safety factor		0.000	
Combination coefficient ψ-0		0.750	(rare)
Combination coefficient ψ-1'		0.800	(non frequent)
Combination coefficient ψ-1		0.750	(frequent)
Combination coefficient ψ-2		0.200	(permanent)

Loads

Kind	Referenceto	Projection W[m]	Coordinates X[m]	Y[m]	Z[m]	Type	Loadvalue
Area			88.000	7.175	0.000	Pz	6.50 [kN/m2]
			126.000	7.175	0.000		6.50 [kN/m2]
			126.000	4.175	0.000		6.50 [kN/m2]
			88.000	4.175	0.000		6.50 [kN/m2]
	gar	3100			activated		100.00 percent

SOFiSTiK AG - www.sofistik.de

Composite bridge 38+50+38, b=14.25m, 2x2HL1100R HISTAR460 , slab 0.30m C30/37
Obc termiczne/thermal loads

Actions

type	part	sup	Title	γ-u	γ-f	γ-a	ψ-0	ψ-1	ψ-2
X		excl	singl load cases	1.00	0.00	1.00	1.00	1.00	1.00
G	G	perm	dead load	1.35	1.00	1.00	1.00	1.00	1.00
G_1	G	perm	gk	1.35	1.00	1.00	1.00	1.00	1.00
G_2	G	perm	gn	1.35	1.00	1.00	1.00	1.00	1.00
G_3	G	perm	soil horisontal	1.50	1.00	1.00	1.00	1.00	1.00
C	P	perm	C+S	1.35	1.00	1.00	1.00	1.00	1.00
C_1	P	perm	C+S	1.35	1.00	1.00	1.00	1.00	1.00
C_2	P	perm	C+S	1.35	0.00	1.00	1.00	1.00	1.00
F	Q	cond	settlements	1.20	0.00	1.00	1.00	1.00	1.00
F_1	Q	cond	settlements	1.20	0.00	1.00	1.00	1.00	1.00
L	Q	excl	live loading	1.50	0.00	1.00	0.75	0.75	0.20
L_1	Q	excl	TS from LM1 EN	1.50	0.00	1.00	0.75	0.75	0.20
Q	Q	cond	gr1a EN	1.50	0.00	1.00	0.75	0.75	0.20
Q_1	Q	cond	gr1a vertical EN	1.50	0.00	1.00	0.75	0.75	0.20
Q_2	Q	cond	B+A EN	1.50	0.00	1.00	0.75	0.75	0.20
Q_3	Q	cond	horis perp EN	1.50	0.00	1.00	0.75	0.75	0.20
T	Q	excl	temp	1.50	0.00	1.00	0.60	0.60	0.50
T_1	Q	excl	temp	1.50	0.00	1.00	0.60	0.60	0.50
			Reduction coefficient xsi		0.850				

Load Case 901 (T_1) TN:+31

Factor forces and moments		1.000	
Factor dead weight	DL-XX	0.000	
Factor dead weight	DL-YY	0.000	
Factor dead weight	DL-ZZ	0.000	
unfavourable safety factor		1.500	
favourable safety factor		0.000	
Combination coefficient ψ-0		0.600	(rare)
Combination coefficient ψ-1'		1.000	(non frequent)
Combination coefficient ψ-1		0.600	(frequent)
Combination coefficient ψ-2		0.500	(permanent)

Loads

Kind	Referenceto	Projection Coordinates W[m]	X[m]	Y[m]	Z[m]	Type	Loadvalue
Area						TEMP	31.000 [°C]
	QGRP	81			activated		100.00 percent
Area						TEMP	31.000 [°C]
	QGRP	82			activated		100.00 percent
Area						TEMP	31.000 [°C]
	QGRP	83			activated		100.00 percent

Loads acting on Beam-elements

Number	Type	a[m]	l[m]	Loadval	Loadval Dimens.	ya[m]	za[m]	ye[m]	ze[m]
510001	TEMP	0.000	2.375	31.000	[°C]				
510002	TEMP	0.000	2.375	31.000	[°C]				
510003	TEMP	0.000	2.375	31.000	[°C]				
510004	TEMP	0.000	2.375	31.000	[°C]				
510005	TEMP	0.000	1.625	31.000	[°C]				
510006	TEMP	0.000	1.625	31.000	[°C]				
510007	TEMP	0.000	1.642	31.000	[°C]				
510008	TEMP	0.000	1.608	31.000	[°C]				
510009	TEMP	0.000	2.500	31.000	[°C]				
510010	TEMP	0.000	2.500	31.000	[°C]				
510011	TEMP	0.000	2.000	31.000	[°C]				
510012	TEMP	0.000	2.000	31.000	[°C]				
510013	TEMP	0.000	2.000	31.000	[°C]				
510014	TEMP	0.000	2.000	31.000	[°C]				
510015	TEMP	0.000	2.000	31.000	[°C]				
510016	TEMP	0.000	2.000	31.000	[°C]				
510017	TEMP	0.000	2.172	31.000	[°C]				
510018	TEMP	0.000	1.828	31.000	[°C]				
510019	TEMP	0.000	2.843	31.000	[°C]				
510020	TEMP	0.000	2.157	31.000	[°C]				

SOFiSTiK AG - www.sofistik.de

Composite bridge 38+50+38, b=14.25m, 2x2HL1100R HISTAR460 , slab 0.30m C30/37
Obc termiczne/thermal loads

Loads acting on Beam-elements

Number	Type	a[m]	l[m]	Loadval	Loadval	Dimens.	ya[m]	za[m]	ye[m]	ze[m]
510021	TEMP	0.000	1.900	31.000		[°C]				
510022	TEMP	0.000	1.900	31.000		[°C]				
510023	TEMP	0.000	1.900	31.000		[°C]				
510024	TEMP	0.000	1.900	31.000		[°C]				
520001	TEMP	0.000	1.783	31.000		[°C]				
520002	TEMP	0.000	2.383	31.000		[°C]				
520003	TEMP	0.000	2.571	31.000		[°C]				
520004	TEMP	0.000	1.596	31.000		[°C]				
520005	TEMP	0.000	1.883	31.000		[°C]				
520006	TEMP	0.000	2.284	31.000		[°C]				
520007	TEMP	0.000	2.083	31.000		[°C]				
520008	TEMP	0.000	2.083	31.000		[°C]				
520009	TEMP	0.000	2.083	31.000		[°C]				
520010	TEMP	0.000	2.083	31.000		[°C]				
520011	TEMP	0.000	2.083	31.000		[°C]				
520012	TEMP	0.000	2.083	31.000		[°C]				
520013	TEMP	0.000	2.500	31.000		[°C]				
520014	TEMP	0.000	2.500	31.000		[°C]				
520015	TEMP	0.000	1.658	31.000		[°C]				
520016	TEMP	0.000	2.509	31.000		[°C]				
520017	TEMP	0.000	2.554	31.000		[°C]				
520018	TEMP	0.000	1.613	31.000		[°C]				
520019	TEMP	0.000	1.892	31.000		[°C]				
520020	TEMP	0.000	2.275	31.000		[°C]				
520021	TEMP	0.000	2.083	31.000		[°C]				
520022	TEMP	0.000	2.083	31.000		[°C]				
520023	TEMP	0.000	2.083	31.000		[°C]				
520024	TEMP	0.000	2.083	31.000		[°C]				
520025	TEMP	0.000	2.083	31.000		[°C]				
520026	TEMP	0.000	2.083	31.000		[°C]				
520027	TEMP	0.000	2.491	31.000		[°C]				
520028	TEMP	0.000	2.509	31.000		[°C]				
520029	TEMP	0.000	2.500	31.000		[°C]				
520030	TEMP	0.000	2.500	31.000		[°C]				
520031	TEMP	0.000	2.500	31.000		[°C]				
520032	TEMP	0.000	2.500	31.000		[°C]				
530001	TEMP	0.000	1.625	31.000		[°C]				
530002	TEMP	0.000	1.625	31.000		[°C]				
530003	TEMP	0.000	1.625	31.000		[°C]				
530004	TEMP	0.000	1.625	31.000		[°C]				
530005	TEMP	0.000	2.375	31.000		[°C]				
530006	TEMP	0.000	2.375	31.000		[°C]				
530007	TEMP	0.000	2.375	31.000		[°C]				
530008	TEMP	0.000	2.375	31.000		[°C]				
530009	TEMP	0.000	1.900	31.000		[°C]				
530010	TEMP	0.000	1.900	31.000		[°C]				
530011	TEMP	0.000	2.000	31.000		[°C]				
530012	TEMP	0.000	2.000	31.000		[°C]				
530013	TEMP	0.000	2.000	31.000		[°C]				
530014	TEMP	0.000	2.000	31.000		[°C]				
530015	TEMP	0.000	2.000	31.000		[°C]				
530016	TEMP	0.000	2.000	31.000		[°C]				
530017	TEMP	0.000	2.000	31.000		[°C]				
530018	TEMP	0.000	2.000	31.000		[°C]				
530019	TEMP	0.000	1.900	31.000		[°C]				
530020	TEMP	0.000	1.900	31.000		[°C]				
530021	TEMP	0.000	2.500	31.000		[°C]				
530022	TEMP	0.000	2.500	31.000		[°C]				
530023	TEMP	0.000	2.500	31.000		[°C]				
530024	TEMP	0.000	2.500	31.000		[°C]				
1510001	TEMP	0.000	0.162	31.000		[°C]				
1510002	TEMP	0.000	0.162	31.000		[°C]				
1510003	TEMP	0.000	0.255	31.000		[°C]				
1510004	TEMP	0.000	0.255	31.000		[°C]				

SOFiSTiK AG - www.sofistik.de

Composite bridge 38+50+38, b=14.25m, 2x2HL1100R HISTAR460 , slab 0.30m C30/37
Obc termiczne/thermal loads

Loads acting on Beam-elements

Number	Type	a[m]	l[m]	Loadval	Loadval	Dimens.	ya[m]	za[m]	ye[m]	ze[m]
1510005	TEMP	0.000	0.401	31.000		[°C]				
1510006	TEMP	0.000	0.401	31.000		[°C]				
1510007	TEMP	0.000	0.585	31.000		[°C]				
1510008	TEMP	0.000	0.733	31.000		[°C]				
1510009	TEMP	0.000	0.923	31.000		[°C]				
1510010	TEMP	0.000	0.923	31.000		[°C]				
1510011	TEMP	0.000	0.922	31.000		[°C]				
1510012	TEMP	0.000	0.922	31.000		[°C]				
1510013	TEMP	0.000	1.142	31.000		[°C]				
1510014	TEMP	0.000	1.815	31.000		[°C]				
1510015	TEMP	0.000	1.155	31.000		[°C]				
1510016	TEMP	0.000	1.294	31.000		[°C]				
1510017	TEMP	0.000	0.779	31.000		[°C]				
1510018	TEMP	0.000	0.779	31.000		[°C]				
1510019	TEMP	0.000	0.566	31.000		[°C]				
1510020	TEMP	0.000	0.566	31.000		[°C]				
1510021	TEMP	0.000	0.348	31.000		[°C]				
1510022	TEMP	0.000	0.348	31.000		[°C]				
1510023	TEMP	0.000	0.230	31.000		[°C]				
1510024	TEMP	0.000	0.230	31.000		[°C]				
1510025	TEMP	0.000	0.152	31.000		[°C]				
1510026	TEMP	0.000	0.152	31.000		[°C]				
1510027	TEMP	0.000	1.515	31.000		[°C]				
1510028	TEMP	0.000	1.515	31.000		[°C]				
1510029	TEMP	0.000	1.083	31.000		[°C]				
1510030	TEMP	0.000	1.084	31.000		[°C]				
1510031	TEMP	0.000	0.701	31.000		[°C]				
1510032	TEMP	0.000	0.701	31.000		[°C]				
1520001	TEMP	0.000	0.152	31.000		[°C]				
1520002	TEMP	0.000	0.152	31.000		[°C]				
1520003	TEMP	0.000	0.230	31.000		[°C]				
1520004	TEMP	0.000	0.230	31.000		[°C]				
1520005	TEMP	0.000	0.348	31.000		[°C]				
1520006	TEMP	0.000	0.348	31.000		[°C]				
1520007	TEMP	0.000	0.566	31.000		[°C]				
1520008	TEMP	0.000	0.566	31.000		[°C]				
1520009	TEMP	0.000	0.779	31.000		[°C]				
1520010	TEMP	0.000	0.779	31.000		[°C]				
1520011	TEMP	0.000	1.225	31.000		[°C]				
1520012	TEMP	0.000	1.225	31.000		[°C]				
1520013	TEMP	0.000	1.188	31.000		[°C]				
1520014	TEMP	0.000	1.188	31.000		[°C]				
1520015	TEMP	0.000	2.112	31.000		[°C]				
1520016	TEMP	0.000	2.112	31.000		[°C]				
1520017	TEMP	0.000	1.191	31.000		[°C]				
1520018	TEMP	0.000	1.259	31.000		[°C]				
1520019	TEMP	0.000	0.779	31.000		[°C]				
1520020	TEMP	0.000	0.779	31.000		[°C]				
1520021	TEMP	0.000	0.566	31.000		[°C]				
1520022	TEMP	0.000	0.566	31.000		[°C]				
1520023	TEMP	0.000	0.348	31.000		[°C]				
1520024	TEMP	0.000	0.348	31.000		[°C]				
1520025	TEMP	0.000	0.230	31.000		[°C]				
1520026	TEMP	0.000	0.230	31.000		[°C]				
1520027	TEMP	0.000	0.152	31.000		[°C]				
1520028	TEMP	0.000	0.152	31.000		[°C]				
1520029	TEMP	0.000	1.588	31.000		[°C]				
1520030	TEMP	0.000	1.443	31.000		[°C]				
1520031	TEMP	0.000	1.084	31.000		[°C]				
1520032	TEMP	0.000	1.083	31.000		[°C]				
1520033	TEMP	0.000	0.659	31.000		[°C]				
1520034	TEMP	0.000	0.743	31.000		[°C]				
1530001	TEMP	0.000	0.164	31.000		[°C]				
1530002	TEMP	0.000	0.141	31.000		[°C]				

SOFiSTiK AG - www.sofistik.de

Composite bridge 38+50+38, b=14.25m, 2x2HL1100R HISTAR460 , slab 0.30m C30/37
Obc termiczne/thermal loads

Loads acting on Beam-elements

Number	Type	a[m]	l[m]	Loadval	Loadval Dimens.	ya[m]	za[m]	ye[m]	ze[m]
1530003	TEMP	0.000	0.230	31.000	[°C]				
1530004	TEMP	0.000	0.230	31.000	[°C]				
1530005	TEMP	0.000	0.223	31.000	[°C]				
1530006	TEMP	0.000	0.473	31.000	[°C]				
1530007	TEMP	0.000	0.615	31.000	[°C]				
1530008	TEMP	0.000	0.517	31.000	[°C]				
1530009	TEMP	0.000	0.779	31.000	[°C]				
1530010	TEMP	0.000	0.779	31.000	[°C]				
1530011	TEMP	0.000	1.225	31.000	[°C]				
1530012	TEMP	0.000	1.225	31.000	[°C]				
1530013	TEMP	0.000	0.988	31.000	[°C]				
1530014	TEMP	0.000	1.388	31.000	[°C]				
1530015	TEMP	0.000	1.747	31.000	[°C]				
1530016	TEMP	0.000	2.477	31.000	[°C]				
1530017	TEMP	0.000	0.923	31.000	[°C]				
1530018	TEMP	0.000	0.923	31.000	[°C]				
1530019	TEMP	0.000	0.659	31.000	[°C]				
1530020	TEMP	0.000	0.659	31.000	[°C]				
1530021	TEMP	0.000	0.468	31.000	[°C]				
1530022	TEMP	0.000	0.334	31.000	[°C]				
1530023	TEMP	0.000	0.255	31.000	[°C]				
1530024	TEMP	0.000	0.255	31.000	[°C]				
1530025	TEMP	0.000	0.162	31.000	[°C]				
1530026	TEMP	0.000	0.162	31.000	[°C]				
1530027	TEMP	0.000	1.478	31.000	[°C]				
1530028	TEMP	0.000	1.478	31.000	[°C]				
1530029	TEMP	0.000	0.922	31.000	[°C]				
1530030	TEMP	0.000	0.922	31.000	[°C]				

Load Case 902 (T_1) TN:-30

Factor forces and moments		1.000	
Factor dead weight	DL-XX	0.000	
Factor dead weight	DL-YY	0.000	
Factor dead weight	DL-ZZ	0.000	
unfavourable safety factor		1.500	
favourable safety factor		0.000	
Combination coefficient ψ-0		0.600	(rare)
Combination coefficient ψ-1'		1.000	(non frequent)
Combination coefficient ψ-1		0.600	(frequent)
Combination coefficient ψ-2		0.500	(permanent)

Loads

Kind	Referenceto	Projection Coordinates W[m]	X[m]	Y[m]	Z[m]	Type	Loadvalue	
Area						TEMP	-30.000	[°C]
	QGRP	81			activated		100.00	percent
Area						TEMP	-30.000	[°C]
	QGRP	82			activated		100.00	percent
Area						TEMP	-30.000	[°C]
	QGRP	83			activated		100.00	percent

Loads acting on Beam-elements

Number	Type	a[m]	l[m]	Loadval	Loadval Dimens.	ya[m]	za[m]	ye[m]	ze[m]
510001	TEMP	0.000	2.375	-30.000	[°C]				
510002	TEMP	0.000	2.375	-30.000	[°C]				
510003	TEMP	0.000	2.375	-30.000	[°C]				
510004	TEMP	0.000	2.375	-30.000	[°C]				
510005	TEMP	0.000	1.625	-30.000	[°C]				
510006	TEMP	0.000	1.625	-30.000	[°C]				
510007	TEMP	0.000	1.642	-30.000	[°C]				
510008	TEMP	0.000	1.608	-30.000	[°C]				
510009	TEMP	0.000	2.500	-30.000	[°C]				
510010	TEMP	0.000	2.500	-30.000	[°C]				
510011	TEMP	0.000	2.000	-30.000	[°C]				

SOFiSTiK AG - www.sofistik.de

Composite bridge 38+50+38, b=14.25m, 2x2HL1100R HISTAR460 , slab 0.30m C30/37
Obc termiczne/thermal loads

Loads acting on Beam-elements

Number	Type	a[m]	l[m]	Loadval	Loadval	Dimens.	ya[m]	za[m]	ye[m]	ze[m]
510012	TEMP	0.000	2.000	-30.000		[°C]				
510013	TEMP	0.000	2.000	-30.000		[°C]				
510014	TEMP	0.000	2.000	-30.000		[°C]				
510015	TEMP	0.000	2.000	-30.000		[°C]				
510016	TEMP	0.000	2.000	-30.000		[°C]				
510017	TEMP	0.000	2.172	-30.000		[°C]				
510018	TEMP	0.000	1.828	-30.000		[°C]				
510019	TEMP	0.000	2.843	-30.000		[°C]				
510020	TEMP	0.000	2.157	-30.000		[°C]				
510021	TEMP	0.000	1.900	-30.000		[°C]				
510022	TEMP	0.000	1.900	-30.000		[°C]				
510023	TEMP	0.000	1.900	-30.000		[°C]				
510024	TEMP	0.000	1.900	-30.000		[°C]				
520001	TEMP	0.000	1.783	-30.000		[°C]				
520002	TEMP	0.000	2.383	-30.000		[°C]				
520003	TEMP	0.000	2.571	-30.000		[°C]				
520004	TEMP	0.000	1.596	-30.000		[°C]				
520005	TEMP	0.000	1.883	-30.000		[°C]				
520006	TEMP	0.000	2.284	-30.000		[°C]				
520007	TEMP	0.000	2.083	-30.000		[°C]				
520008	TEMP	0.000	2.083	-30.000		[°C]				
520009	TEMP	0.000	2.083	-30.000		[°C]				
520010	TEMP	0.000	2.083	-30.000		[°C]				
520011	TEMP	0.000	2.083	-30.000		[°C]				
520012	TEMP	0.000	2.083	-30.000		[°C]				
520013	TEMP	0.000	2.500	-30.000		[°C]				
520014	TEMP	0.000	2.500	-30.000		[°C]				
520015	TEMP	0.000	1.658	-30.000		[°C]				
520016	TEMP	0.000	2.509	-30.000		[°C]				
520017	TEMP	0.000	2.554	-30.000		[°C]				
520018	TEMP	0.000	1.613	-30.000		[°C]				
520019	TEMP	0.000	1.892	-30.000		[°C]				
520020	TEMP	0.000	2.275	-30.000		[°C]				
520021	TEMP	0.000	2.083	-30.000		[°C]				
520022	TEMP	0.000	2.083	-30.000		[°C]				
520023	TEMP	0.000	2.083	-30.000		[°C]				
520024	TEMP	0.000	2.083	-30.000		[°C]				
520025	TEMP	0.000	2.083	-30.000		[°C]				
520026	TEMP	0.000	2.083	-30.000		[°C]				
520027	TEMP	0.000	2.491	-30.000		[°C]				
520028	TEMP	0.000	2.509	-30.000		[°C]				
520029	TEMP	0.000	2.500	-30.000		[°C]				
520030	TEMP	0.000	2.500	-30.000		[°C]				
520031	TEMP	0.000	2.500	-30.000		[°C]				
520032	TEMP	0.000	2.500	-30.000		[°C]				
530001	TEMP	0.000	1.625	-30.000		[°C]				
530002	TEMP	0.000	1.625	-30.000		[°C]				
530003	TEMP	0.000	1.625	-30.000		[°C]				
530004	TEMP	0.000	1.625	-30.000		[°C]				
530005	TEMP	0.000	2.375	-30.000		[°C]				
530006	TEMP	0.000	2.375	-30.000		[°C]				
530007	TEMP	0.000	2.375	-30.000		[°C]				
530008	TEMP	0.000	2.375	-30.000		[°C]				
530009	TEMP	0.000	1.900	-30.000		[°C]				
530010	TEMP	0.000	1.900	-30.000		[°C]				
530011	TEMP	0.000	2.000	-30.000		[°C]				
530012	TEMP	0.000	2.000	-30.000		[°C]				
530013	TEMP	0.000	2.000	-30.000		[°C]				
530014	TEMP	0.000	2.000	-30.000		[°C]				
530015	TEMP	0.000	2.000	-30.000		[°C]				
530016	TEMP	0.000	2.000	-30.000		[°C]				
530017	TEMP	0.000	2.000	-30.000		[°C]				
530018	TEMP	0.000	2.000	-30.000		[°C]				
530019	TEMP	0.000	1.900	-30.000		[°C]				

SOFiSTiK AG - www.sofistik.de

Composite bridge 38+50+38, b=14.25m, 2x2HL1100R HISTAR460 , slab 0.30m C30/37
Obc termiczne/thermal loads

Loads acting on Beam-elements

Number	Type	a[m]	l[m]	Loadval	Loadval	Dimens.	ya[m]	za[m]	ye[m]	ze[m]
530020	TEMP	0.000	1.900	-30.000		[°C]				
530021	TEMP	0.000	2.500	-30.000		[°C]				
530022	TEMP	0.000	2.500	-30.000		[°C]				
530023	TEMP	0.000	2.500	-30.000		[°C]				
530024	TEMP	0.000	2.500	-30.000		[°C]				
1510001	TEMP	0.000	0.162	-30.000		[°C]				
1510002	TEMP	0.000	0.162	-30.000		[°C]				
1510003	TEMP	0.000	0.255	-30.000		[°C]				
1510004	TEMP	0.000	0.255	-30.000		[°C]				
1510005	TEMP	0.000	0.401	-30.000		[°C]				
1510006	TEMP	0.000	0.401	-30.000		[°C]				
1510007	TEMP	0.000	0.585	-30.000		[°C]				
1510008	TEMP	0.000	0.733	-30.000		[°C]				
1510009	TEMP	0.000	0.923	-30.000		[°C]				
1510010	TEMP	0.000	0.923	-30.000		[°C]				
1510011	TEMP	0.000	0.922	-30.000		[°C]				
1510012	TEMP	0.000	0.922	-30.000		[°C]				
1510013	TEMP	0.000	1.142	-30.000		[°C]				
1510014	TEMP	0.000	1.815	-30.000		[°C]				
1510015	TEMP	0.000	1.155	-30.000		[°C]				
1510016	TEMP	0.000	1.294	-30.000		[°C]				
1510017	TEMP	0.000	0.779	-30.000		[°C]				
1510018	TEMP	0.000	0.779	-30.000		[°C]				
1510019	TEMP	0.000	0.566	-30.000		[°C]				
1510020	TEMP	0.000	0.566	-30.000		[°C]				
1510021	TEMP	0.000	0.348	-30.000		[°C]				
1510022	TEMP	0.000	0.348	-30.000		[°C]				
1510023	TEMP	0.000	0.230	-30.000		[°C]				
1510024	TEMP	0.000	0.230	-30.000		[°C]				
1510025	TEMP	0.000	0.152	-30.000		[°C]				
1510026	TEMP	0.000	0.152	-30.000		[°C]				
1510027	TEMP	0.000	1.515	-30.000		[°C]				
1510028	TEMP	0.000	1.515	-30.000		[°C]				
1510029	TEMP	0.000	1.083	-30.000		[°C]				
1510030	TEMP	0.000	1.084	-30.000		[°C]				
1510031	TEMP	0.000	0.701	-30.000		[°C]				
1510032	TEMP	0.000	0.701	-30.000		[°C]				
1520001	TEMP	0.000	0.152	-30.000		[°C]				
1520002	TEMP	0.000	0.152	-30.000		[°C]				
1520003	TEMP	0.000	0.230	-30.000		[°C]				
1520004	TEMP	0.000	0.230	-30.000		[°C]				
1520005	TEMP	0.000	0.348	-30.000		[°C]				
1520006	TEMP	0.000	0.348	-30.000		[°C]				
1520007	TEMP	0.000	0.566	-30.000		[°C]				
1520008	TEMP	0.000	0.566	-30.000		[°C]				
1520009	TEMP	0.000	0.779	-30.000		[°C]				
1520010	TEMP	0.000	0.779	-30.000		[°C]				
1520011	TEMP	0.000	1.225	-30.000		[°C]				
1520012	TEMP	0.000	1.225	-30.000		[°C]				
1520013	TEMP	0.000	1.188	-30.000		[°C]				
1520014	TEMP	0.000	1.188	-30.000		[°C]				
1520015	TEMP	0.000	2.112	-30.000		[°C]				
1520016	TEMP	0.000	2.112	-30.000		[°C]				
1520017	TEMP	0.000	1.191	-30.000		[°C]				
1520018	TEMP	0.000	1.259	-30.000		[°C]				
1520019	TEMP	0.000	0.779	-30.000		[°C]				
1520020	TEMP	0.000	0.779	-30.000		[°C]				
1520021	TEMP	0.000	0.566	-30.000		[°C]				
1520022	TEMP	0.000	0.566	-30.000		[°C]				
1520023	TEMP	0.000	0.348	-30.000		[°C]				
1520024	TEMP	0.000	0.348	-30.000		[°C]				
1520025	TEMP	0.000	0.230	-30.000		[°C]				
1520026	TEMP	0.000	0.230	-30.000		[°C]				
1520027	TEMP	0.000	0.152	-30.000		[°C]				

SOFiSTiK AG - www.sofistik.de

Composite bridge 38+50+38, b=14.25m, 2x2HL1100R HISTAR460 , slab 0.30m C30/37
Obc termiczne/thermal loads

Loads acting on Beam-elements

Number	Type	a[m]	l[m]	Loadval	Loadval Dimens.	ya[m]	za[m]	ye[m]	ze[m]
1520028	TEMP	0.000	0.152	-30.000	[°C]				
1520029	TEMP	0.000	1.588	-30.000	[°C]				
1520030	TEMP	0.000	1.443	-30.000	[°C]				
1520031	TEMP	0.000	1.084	-30.000	[°C]				
1520032	TEMP	0.000	1.083	-30.000	[°C]				
1520033	TEMP	0.000	0.659	-30.000	[°C]				
1520034	TEMP	0.000	0.743	-30.000	[°C]				
1530001	TEMP	0.000	0.164	-30.000	[°C]				
1530002	TEMP	0.000	0.141	-30.000	[°C]				
1530003	TEMP	0.000	0.230	-30.000	[°C]				
1530004	TEMP	0.000	0.230	-30.000	[°C]				
1530005	TEMP	0.000	0.223	-30.000	[°C]				
1530006	TEMP	0.000	0.473	-30.000	[°C]				
1530007	TEMP	0.000	0.615	-30.000	[°C]				
1530008	TEMP	0.000	0.517	-30.000	[°C]				
1530009	TEMP	0.000	0.779	-30.000	[°C]				
1530010	TEMP	0.000	0.779	-30.000	[°C]				
1530011	TEMP	0.000	1.225	-30.000	[°C]				
1530012	TEMP	0.000	1.225	-30.000	[°C]				
1530013	TEMP	0.000	0.988	-30.000	[°C]				
1530014	TEMP	0.000	1.388	-30.000	[°C]				
1530015	TEMP	0.000	1.747	-30.000	[°C]				
1530016	TEMP	0.000	2.477	-30.000	[°C]				
1530017	TEMP	0.000	0.923	-30.000	[°C]				
1530018	TEMP	0.000	0.923	-30.000	[°C]				
1530019	TEMP	0.000	0.659	-30.000	[°C]				
1530020	TEMP	0.000	0.659	-30.000	[°C]				
1530021	TEMP	0.000	0.468	-30.000	[°C]				
1530022	TEMP	0.000	0.334	-30.000	[°C]				
1530023	TEMP	0.000	0.255	-30.000	[°C]				
1530024	TEMP	0.000	0.255	-30.000	[°C]				
1530025	TEMP	0.000	0.162	-30.000	[°C]				
1530026	TEMP	0.000	0.162	-30.000	[°C]				
1530027	TEMP	0.000	1.478	-30.000	[°C]				
1530028	TEMP	0.000	1.478	-30.000	[°C]				
1530029	TEMP	0.000	0.922	-30.000	[°C]				
1530030	TEMP	0.000	0.922	-30.000	[°C]				

Load Case 910 (T_1) TM:18deg-bottom warmer

Factor forces and moments		1.000	
Factor dead weight	DL-XX	0.000	
Factor dead weight	DL-YY	0.000	
Factor dead weight	DL-ZZ	0.000	
unfavourable safety factor		1.500	
favourable safety factor		0.000	
Combination coefficient ψ-0		0.600	(rare)
Combination coefficient ψ-1'		1.000	(non frequent)
Combination coefficient ψ-1		0.600	(frequent)
Combination coefficient ψ-2		0.500	(permanent)

Loads acting on Beam-elements

Number	Type	a[m]	l[m]	Loadval	Loadval Dimens.	ya[m]	za[m]	ye[m]	ze[m]
510001	dTz	0.000	2.375	18.000	[°C]				
510002	dTz	0.000	2.375	18.000	[°C]				
510003	dTz	0.000	2.375	18.000	[°C]				
510004	dTz	0.000	2.375	18.000	[°C]				
510005	dTz	0.000	1.625	18.000	[°C]				
510006	dTz	0.000	1.625	18.000	[°C]				
510007	dTz	0.000	1.642	18.000	[°C]				
510008	dTz	0.000	1.608	18.000	[°C]				
510009	dTz	0.000	2.500	18.000	[°C]				
510010	dTz	0.000	2.500	18.000	[°C]				
510011	dTz	0.000	2.000	18.000	[°C]				
510012	dTz	0.000	2.000	18.000	[°C]				

SOFiSTiK AG - www.sofistik.de

Composite bridge 38+50+38, b=14.25m, 2x2HL1100R HISTAR460 , slab 0.30m C30/37
Obc termiczne/thermal loads

Loads acting on Beam-elements

Number	Type	a[m]	l[m]	Loadval	Loadval	Dimens.	ya[m]	za[m]	ye[m]	ze[m]
510013	dTz	0.000	2.000	18.000		[°C]				
510014	dTz	0.000	2.000	18.000		[°C]				
510015	dTz	0.000	2.000	18.000		[°C]				
510016	dTz	0.000	2.000	18.000		[°C]				
510017	dTz	0.000	2.172	18.000		[°C]				
510018	dTz	0.000	1.828	18.000		[°C]				
510019	dTz	0.000	2.843	18.000		[°C]				
510020	dTz	0.000	2.157	18.000		[°C]				
510021	dTz	0.000	1.900	18.000		[°C]				
510022	dTz	0.000	1.900	18.000		[°C]				
510023	dTz	0.000	1.900	18.000		[°C]				
510024	dTz	0.000	1.900	18.000		[°C]				
520001	dTz	0.000	1.783	18.000		[°C]				
520002	dTz	0.000	2.383	18.000		[°C]				
520003	dTz	0.000	2.571	18.000		[°C]				
520004	dTz	0.000	1.596	18.000		[°C]				
520005	dTz	0.000	1.883	18.000		[°C]				
520006	dTz	0.000	2.284	18.000		[°C]				
520007	dTz	0.000	2.083	18.000		[°C]				
520008	dTz	0.000	2.083	18.000		[°C]				
520009	dTz	0.000	2.083	18.000		[°C]				
520010	dTz	0.000	2.083	18.000		[°C]				
520011	dTz	0.000	2.083	18.000		[°C]				
520012	dTz	0.000	2.083	18.000		[°C]				
520013	dTz	0.000	2.500	18.000		[°C]				
520014	dTz	0.000	2.500	18.000		[°C]				
520015	dTz	0.000	1.658	18.000		[°C]				
520016	dTz	0.000	2.509	18.000		[°C]				
520017	dTz	0.000	2.554	18.000		[°C]				
520018	dTz	0.000	1.613	18.000		[°C]				
520019	dTz	0.000	1.892	18.000		[°C]				
520020	dTz	0.000	2.275	18.000		[°C]				
520021	dTz	0.000	2.083	18.000		[°C]				
520022	dTz	0.000	2.083	18.000		[°C]				
520023	dTz	0.000	2.083	18.000		[°C]				
520024	dTz	0.000	2.083	18.000		[°C]				
520025	dTz	0.000	2.083	18.000		[°C]				
520026	dTz	0.000	2.083	18.000		[°C]				
520027	dTz	0.000	2.491	18.000		[°C]				
520028	dTz	0.000	2.509	18.000		[°C]				
520029	dTz	0.000	2.500	18.000		[°C]				
520030	dTz	0.000	2.500	18.000		[°C]				
520031	dTz	0.000	2.500	18.000		[°C]				
520032	dTz	0.000	2.500	18.000		[°C]				
530001	dTz	0.000	1.625	18.000		[°C]				
530002	dTz	0.000	1.625	18.000		[°C]				
530003	dTz	0.000	1.625	18.000		[°C]				
530004	dTz	0.000	1.625	18.000		[°C]				
530005	dTz	0.000	2.375	18.000		[°C]				
530006	dTz	0.000	2.375	18.000		[°C]				
530007	dTz	0.000	2.375	18.000		[°C]				
530008	dTz	0.000	2.375	18.000		[°C]				
530009	dTz	0.000	1.900	18.000		[°C]				
530010	dTz	0.000	1.900	18.000		[°C]				
530011	dTz	0.000	2.000	18.000		[°C]				
530012	dTz	0.000	2.000	18.000		[°C]				
530013	dTz	0.000	2.000	18.000		[°C]				
530014	dTz	0.000	2.000	18.000		[°C]				
530015	dTz	0.000	2.000	18.000		[°C]				
530016	dTz	0.000	2.000	18.000		[°C]				
530017	dTz	0.000	2.000	18.000		[°C]				
530018	dTz	0.000	2.000	18.000		[°C]				
530019	dTz	0.000	1.900	18.000		[°C]				
530020	dTz	0.000	1.900	18.000		[°C]				

SOFiSTiK AG - www.sofistik.de

Composite bridge 38+50+38, b=14.25m, 2x2HL1100R HISTAR460 , slab 0.30m C30/37
Obc termiczne/thermal loads

Loads acting on Beam-elements

Number	Type	a[m]	l[m]	Loadval	Loadval	Dimens.	ya[m]	za[m]	ye[m]	ze[m]
530021	dTz	0.000	2.500	18.000		[°C]				
530022	dTz	0.000	2.500	18.000		[°C]				
530023	dTz	0.000	2.500	18.000		[°C]				
530024	dTz	0.000	2.500	18.000		[°C]				
1510001	dTz	0.000	0.162	18.000		[°C]				
1510002	dTz	0.000	0.162	18.000		[°C]				
1510003	dTz	0.000	0.255	18.000		[°C]				
1510004	dTz	0.000	0.255	18.000		[°C]				
1510005	dTz	0.000	0.401	18.000		[°C]				
1510006	dTz	0.000	0.401	18.000		[°C]				
1510007	dTz	0.000	0.585	18.000		[°C]				
1510008	dTz	0.000	0.733	18.000		[°C]				
1510009	dTz	0.000	0.923	18.000		[°C]				
1510010	dTz	0.000	0.923	18.000		[°C]				
1510011	dTz	0.000	0.922	18.000		[°C]				
1510012	dTz	0.000	0.922	18.000		[°C]				
1510013	dTz	0.000	1.142	18.000		[°C]				
1510014	dTz	0.000	1.815	18.000		[°C]				
1510015	dTz	0.000	1.155	18.000		[°C]				
1510016	dTz	0.000	1.294	18.000		[°C]				
1510017	dTz	0.000	0.779	18.000		[°C]				
1510018	dTz	0.000	0.779	18.000		[°C]				
1510019	dTz	0.000	0.566	18.000		[°C]				
1510020	dTz	0.000	0.566	18.000		[°C]				
1510021	dTz	0.000	0.348	18.000		[°C]				
1510022	dTz	0.000	0.348	18.000		[°C]				
1510023	dTz	0.000	0.230	18.000		[°C]				
1510024	dTz	0.000	0.230	18.000		[°C]				
1510025	dTz	0.000	0.152	18.000		[°C]				
1510026	dTz	0.000	0.152	18.000		[°C]				
1510027	dTz	0.000	1.515	18.000		[°C]				
1510028	dTz	0.000	1.515	18.000		[°C]				
1510029	dTz	0.000	1.083	18.000		[°C]				
1510030	dTz	0.000	1.084	18.000		[°C]				
1510031	dTz	0.000	0.701	18.000		[°C]				
1510032	dTz	0.000	0.701	18.000		[°C]				
1520001	dTz	0.000	0.152	18.000		[°C]				
1520002	dTz	0.000	0.152	18.000		[°C]				
1520003	dTz	0.000	0.230	18.000		[°C]				
1520004	dTz	0.000	0.230	18.000		[°C]				
1520005	dTz	0.000	0.348	18.000		[°C]				
1520006	dTz	0.000	0.348	18.000		[°C]				
1520007	dTz	0.000	0.566	18.000		[°C]				
1520008	dTz	0.000	0.566	18.000		[°C]				
1520009	dTz	0.000	0.779	18.000		[°C]				
1520010	dTz	0.000	0.779	18.000		[°C]				
1520011	dTz	0.000	1.225	18.000		[°C]				
1520012	dTz	0.000	1.225	18.000		[°C]				
1520013	dTz	0.000	1.188	18.000		[°C]				
1520014	dTz	0.000	1.188	18.000		[°C]				
1520015	dTz	0.000	2.112	18.000		[°C]				
1520016	dTz	0.000	2.112	18.000		[°C]				
1520017	dTz	0.000	1.191	18.000		[°C]				
1520018	dTz	0.000	1.259	18.000		[°C]				
1520019	dTz	0.000	0.779	18.000		[°C]				
1520020	dTz	0.000	0.779	18.000		[°C]				
1520021	dTz	0.000	0.566	18.000		[°C]				
1520022	dTz	0.000	0.566	18.000		[°C]				
1520023	dTz	0.000	0.348	18.000		[°C]				
1520024	dTz	0.000	0.348	18.000		[°C]				
1520025	dTz	0.000	0.230	18.000		[°C]				
1520026	dTz	0.000	0.230	18.000		[°C]				
1520027	dTz	0.000	0.152	18.000		[°C]				
1520028	dTz	0.000	0.152	18.000		[°C]				

SOFiSTiK AG - www.sofistik.de

Composite bridge 38+50+38, b=14.25m, 2x2HL1100R HISTAR460 , slab 0.30m C30/37
Obc termiczne/thermal loads

Loads acting on Beam-elements

Number	Type	a[m]	l[m]	Loadval	Loadval	Dimens.	ya[m]	za[m]	ye[m]	ze[m]
1520029	dTz	0.000	1.588	18.000		[°C]				
1520030	dTz	0.000	1.443	18.000		[°C]				
1520031	dTz	0.000	1.084	18.000		[°C]				
1520032	dTz	0.000	1.083	18.000		[°C]				
1520033	dTz	0.000	0.659	18.000		[°C]				
1520034	dTz	0.000	0.743	18.000		[°C]				
1530001	dTz	0.000	0.164	18.000		[°C]				
1530002	dTz	0.000	0.141	18.000		[°C]				
1530003	dTz	0.000	0.230	18.000		[°C]				
1530004	dTz	0.000	0.230	18.000		[°C]				
1530005	dTz	0.000	0.223	18.000		[°C]				
1530006	dTz	0.000	0.473	18.000		[°C]				
1530007	dTz	0.000	0.615	18.000		[°C]				
1530008	dTz	0.000	0.517	18.000		[°C]				
1530009	dTz	0.000	0.779	18.000		[°C]				
1530010	dTz	0.000	0.779	18.000		[°C]				
1530011	dTz	0.000	1.225	18.000		[°C]				
1530012	dTz	0.000	1.225	18.000		[°C]				
1530013	dTz	0.000	0.988	18.000		[°C]				
1530014	dTz	0.000	1.388	18.000		[°C]				
1530015	dTz	0.000	1.747	18.000		[°C]				
1530016	dTz	0.000	2.477	18.000		[°C]				
1530017	dTz	0.000	0.923	18.000		[°C]				
1530018	dTz	0.000	0.923	18.000		[°C]				
1530019	dTz	0.000	0.659	18.000		[°C]				
1530020	dTz	0.000	0.659	18.000		[°C]				
1530021	dTz	0.000	0.468	18.000		[°C]				
1530022	dTz	0.000	0.334	18.000		[°C]				
1530023	dTz	0.000	0.255	18.000		[°C]				
1530024	dTz	0.000	0.255	18.000		[°C]				
1530025	dTz	0.000	0.162	18.000		[°C]				
1530026	dTz	0.000	0.162	18.000		[°C]				
1530027	dTz	0.000	1.478	18.000		[°C]				
1530028	dTz	0.000	1.478	18.000		[°C]				
1530029	dTz	0.000	0.922	18.000		[°C]				
1530030	dTz	0.000	0.922	18.000		[°C]				

Load Case 911 (T_1) TM(18:bot.warm)+wTN

Factor forces and moments		1.000	
Factor dead weight	DL-XX	0.000	
Factor dead weight	DL-YY	0.000	
Factor dead weight	DL-ZZ	0.000	
unfavourable safety factor		1.500	
favourable safety factor		0.000	
Combination coefficient ψ-0		0.600	(rare)
Combination coefficient ψ-1'		1.000	(non frequent)
Combination coefficient ψ-1		0.600	(frequent)
Combination coefficient ψ-2		0.500	(permanent)

Loads partially copied from load case 910 with factor 1.000
Loads partially copied from load case 901 with factor 0.350

Loads

Kind	Referenceto	Projection Coordinates W[m]	X[m]	Y[m]	Z[m]	Type	Loadvalue
Area						TEMP	10.850 [°C]
	QGRP	81			activated		100.00 percent
Area						TEMP	10.850 [°C]
	QGRP	82			activated		100.00 percent
Area						TEMP	10.850 [°C]
	QGRP	83			activated		100.00 percent

SOFiSTiK AG - www.sofistik.de

Composite bridge 38+50+38, b=14.25m, 2x2HL1100R HISTAR460 , slab 0.30m C30/37
Obc termiczne/thermal loads

Loads acting on Beam-elements

Number	Type	a[m]	l[m]	Loadval	Loadval	Dimens.	ya[m]	za[m]	ye[m]	ze[m]
510001	TEMP	0.000	2.375	10.850		[°C]				
510001	dTz	0.000	2.375	18.000		[°C]				
510002	TEMP	0.000	2.375	10.850		[°C]				
510002	dTz	0.000	2.375	18.000		[°C]				
510003	TEMP	0.000	2.375	10.850		[°C]				
510003	dTz	0.000	2.375	18.000		[°C]				
510004	TEMP	0.000	2.375	10.850		[°C]				
510004	dTz	0.000	2.375	18.000		[°C]				
510005	TEMP	0.000	1.625	10.850		[°C]				
510005	dTz	0.000	1.625	18.000		[°C]				
510006	TEMP	0.000	1.625	10.850		[°C]				
510006	dTz	0.000	1.625	18.000		[°C]				
510007	TEMP	0.000	1.642	10.850		[°C]				
510007	dTz	0.000	1.642	18.000		[°C]				
510008	TEMP	0.000	1.608	10.850		[°C]				
510008	dTz	0.000	1.608	18.000		[°C]				
510009	TEMP	0.000	2.500	10.850		[°C]				
510009	dTz	0.000	2.500	18.000		[°C]				
510010	TEMP	0.000	2.500	10.850		[°C]				
510010	dTz	0.000	2.500	18.000		[°C]				
510011	TEMP	0.000	2.000	10.850		[°C]				
510011	dTz	0.000	2.000	18.000		[°C]				
510012	TEMP	0.000	2.000	10.850		[°C]				
510012	dTz	0.000	2.000	18.000		[°C]				
510013	TEMP	0.000	2.000	10.850		[°C]				
510013	dTz	0.000	2.000	18.000		[°C]				
510014	TEMP	0.000	2.000	10.850		[°C]				
510014	dTz	0.000	2.000	18.000		[°C]				
510015	TEMP	0.000	2.000	10.850		[°C]				
510015	dTz	0.000	2.000	18.000		[°C]				
510016	TEMP	0.000	2.000	10.850		[°C]				
510016	dTz	0.000	2.000	18.000		[°C]				
510017	TEMP	0.000	2.172	10.850		[°C]				
510017	dTz	0.000	2.172	18.000		[°C]				
510018	TEMP	0.000	1.828	10.850		[°C]				
510018	dTz	0.000	1.828	18.000		[°C]				
510019	TEMP	0.000	2.843	10.850		[°C]				
510019	dTz	0.000	2.843	18.000		[°C]				
510020	TEMP	0.000	2.157	10.850		[°C]				
510020	dTz	0.000	2.157	18.000		[°C]				
510021	TEMP	0.000	1.900	10.850		[°C]				
510021	dTz	0.000	1.900	18.000		[°C]				
510022	TEMP	0.000	1.900	10.850		[°C]				
510022	dTz	0.000	1.900	18.000		[°C]				
510023	TEMP	0.000	1.900	10.850		[°C]				
510023	dTz	0.000	1.900	18.000		[°C]				
510024	TEMP	0.000	1.900	10.850		[°C]				
510024	dTz	0.000	1.900	18.000		[°C]				
520001	TEMP	0.000	1.783	10.850		[°C]				
520001	dTz	0.000	1.783	18.000		[°C]				
520002	TEMP	0.000	2.383	10.850		[°C]				
520002	dTz	0.000	2.383	18.000		[°C]				
520003	TEMP	0.000	2.571	10.850		[°C]				
520003	dTz	0.000	2.571	18.000		[°C]				
520004	TEMP	0.000	1.596	10.850		[°C]				
520004	dTz	0.000	1.596	18.000		[°C]				
520005	TEMP	0.000	1.883	10.850		[°C]				
520005	dTz	0.000	1.883	18.000		[°C]				
520006	TEMP	0.000	2.284	10.850		[°C]				
520006	dTz	0.000	2.284	18.000		[°C]				
520007	TEMP	0.000	2.083	10.850		[°C]				
520007	dTz	0.000	2.083	18.000		[°C]				
520008	TEMP	0.000	2.083	10.850		[°C]				
520008	dTz	0.000	2.083	18.000		[°C]				

SOFiSTiK AG - www.sofistik.de

Composite bridge 38+50+38, b=14.25m, 2x2HL1100R HISTAR460 , slab 0.30m C30/37
Obc termiczne/thermal loads

Loads acting on Beam-elements

Number	Type	a[m]	l[m]	Loadval	Loadval	Dimens.	ya[m]	za[m]	ye[m]	ze[m]
520009	TEMP	0.000	2.083	10.850		[°C]				
520009	dTz	0.000	2.083	18.000		[°C]				
520010	TEMP	0.000	2.083	10.850		[°C]				
520010	dTz	0.000	2.083	18.000		[°C]				
520011	TEMP	0.000	2.083	10.850		[°C]				
520011	dTz	0.000	2.083	18.000		[°C]				
520012	TEMP	0.000	2.083	10.850		[°C]				
520012	dTz	0.000	2.083	18.000		[°C]				
520013	TEMP	0.000	2.500	10.850		[°C]				
520013	dTz	0.000	2.500	18.000		[°C]				
520014	TEMP	0.000	2.500	10.850		[°C]				
520014	dTz	0.000	2.500	18.000		[°C]				
520015	TEMP	0.000	1.658	10.850		[°C]				
520015	dTz	0.000	1.658	18.000		[°C]				
520016	TEMP	0.000	2.509	10.850		[°C]				
520016	dTz	0.000	2.509	18.000		[°C]				
520017	TEMP	0.000	2.554	10.850		[°C]				
520017	dTz	0.000	2.554	18.000		[°C]				
520018	TEMP	0.000	1.613	10.850		[°C]				
520018	dTz	0.000	1.613	18.000		[°C]				
520019	TEMP	0.000	1.892	10.850		[°C]				
520019	dTz	0.000	1.892	18.000		[°C]				
520020	TEMP	0.000	2.275	10.850		[°C]				
520020	dTz	0.000	2.275	18.000		[°C]				
520021	TEMP	0.000	2.083	10.850		[°C]				
520021	dTz	0.000	2.083	18.000		[°C]				
520022	TEMP	0.000	2.083	10.850		[°C]				
520022	dTz	0.000	2.083	18.000		[°C]				
520023	TEMP	0.000	2.083	10.850		[°C]				
520023	dTz	0.000	2.083	18.000		[°C]				
520024	TEMP	0.000	2.083	10.850		[°C]				
520024	dTz	0.000	2.083	18.000		[°C]				
520025	TEMP	0.000	2.083	10.850		[°C]				
520025	dTz	0.000	2.083	18.000		[°C]				
520026	TEMP	0.000	2.083	10.850		[°C]				
520026	dTz	0.000	2.083	18.000		[°C]				
520027	TEMP	0.000	2.491	10.850		[°C]				
520027	dTz	0.000	2.491	18.000		[°C]				
520028	TEMP	0.000	2.509	10.850		[°C]				
520028	dTz	0.000	2.509	18.000		[°C]				
520029	TEMP	0.000	2.500	10.850		[°C]				
520029	dTz	0.000	2.500	18.000		[°C]				
520030	TEMP	0.000	2.500	10.850		[°C]				
520030	dTz	0.000	2.500	18.000		[°C]				
520031	TEMP	0.000	2.500	10.850		[°C]				
520031	dTz	0.000	2.500	18.000		[°C]				
520032	TEMP	0.000	2.500	10.850		[°C]				
520032	dTz	0.000	2.500	18.000		[°C]				
530001	TEMP	0.000	1.625	10.850		[°C]				
530001	dTz	0.000	1.625	18.000		[°C]				
530002	TEMP	0.000	1.625	10.850		[°C]				
530002	dTz	0.000	1.625	18.000		[°C]				
530003	TEMP	0.000	1.625	10.850		[°C]				
530003	dTz	0.000	1.625	18.000		[°C]				
530004	TEMP	0.000	1.625	10.850		[°C]				
530004	dTz	0.000	1.625	18.000		[°C]				
530005	TEMP	0.000	2.375	10.850		[°C]				
530005	dTz	0.000	2.375	18.000		[°C]				
530006	TEMP	0.000	2.375	10.850		[°C]				
530006	dTz	0.000	2.375	18.000		[°C]				
530007	TEMP	0.000	2.375	10.850		[°C]				
530007	dTz	0.000	2.375	18.000		[°C]				
530008	TEMP	0.000	2.375	10.850		[°C]				
530008	dTz	0.000	2.375	18.000		[°C]				

SOFiSTiK AG - www.sofistik.de

Composite bridge 38+50+38, b=14.25m, 2x2HL1100R HISTAR460 , slab 0.30m C30/37
Obc termiczne/thermal loads

Loads acting on Beam-elements

Number	Type	a[m]	l[m]	Loadval	Loadval	Dimens.	ya[m]	za[m]	ye[m]	ze[m]
530009	TEMP	0.000	1.900	10.850		[°C]				
530009	dTz	0.000	1.900	18.000		[°C]				
530010	TEMP	0.000	1.900	10.850		[°C]				
530010	dTz	0.000	1.900	18.000		[°C]				
530011	TEMP	0.000	2.000	10.850		[°C]				
530011	dTz	0.000	2.000	18.000		[°C]				
530012	TEMP	0.000	2.000	10.850		[°C]				
530012	dTz	0.000	2.000	18.000		[°C]				
530013	TEMP	0.000	2.000	10.850		[°C]				
530013	dTz	0.000	2.000	18.000		[°C]				
530014	TEMP	0.000	2.000	10.850		[°C]				
530014	dTz	0.000	2.000	18.000		[°C]				
530015	TEMP	0.000	2.000	10.850		[°C]				
530015	dTz	0.000	2.000	18.000		[°C]				
530016	TEMP	0.000	2.000	10.850		[°C]				
530016	dTz	0.000	2.000	18.000		[°C]				
530017	TEMP	0.000	2.000	10.850		[°C]				
530017	dTz	0.000	2.000	18.000		[°C]				
530018	TEMP	0.000	2.000	10.850		[°C]				
530018	dTz	0.000	2.000	18.000		[°C]				
530019	TEMP	0.000	1.900	10.850		[°C]				
530019	dTz	0.000	1.900	18.000		[°C]				
530020	TEMP	0.000	1.900	10.850		[°C]				
530020	dTz	0.000	1.900	18.000		[°C]				
530021	TEMP	0.000	2.500	10.850		[°C]				
530021	dTz	0.000	2.500	18.000		[°C]				
530022	TEMP	0.000	2.500	10.850		[°C]				
530022	dTz	0.000	2.500	18.000		[°C]				
530023	TEMP	0.000	2.500	10.850		[°C]				
530023	dTz	0.000	2.500	18.000		[°C]				
530024	TEMP	0.000	2.500	10.850		[°C]				
530024	dTz	0.000	2.500	18.000		[°C]				
1510001	TEMP	0.000	0.162	10.850		[°C]				
1510001	dTz	0.000	0.162	18.000		[°C]				
1510002	TEMP	0.000	0.162	10.850		[°C]				
1510002	dTz	0.000	0.162	18.000		[°C]				
1510003	TEMP	0.000	0.255	10.850		[°C]				
1510003	dTz	0.000	0.255	18.000		[°C]				
1510004	TEMP	0.000	0.255	10.850		[°C]				
1510004	dTz	0.000	0.255	18.000		[°C]				
1510005	TEMP	0.000	0.401	10.850		[°C]				
1510005	dTz	0.000	0.401	18.000		[°C]				
1510006	TEMP	0.000	0.401	10.850		[°C]				
1510006	dTz	0.000	0.401	18.000		[°C]				
1510007	TEMP	0.000	0.585	10.850		[°C]				
1510007	dTz	0.000	0.585	18.000		[°C]				
1510008	TEMP	0.000	0.733	10.850		[°C]				
1510008	dTz	0.000	0.733	18.000		[°C]				
1510009	TEMP	0.000	0.923	10.850		[°C]				
1510009	dTz	0.000	0.923	18.000		[°C]				
1510010	TEMP	0.000	0.923	10.850		[°C]				
1510010	dTz	0.000	0.923	18.000		[°C]				
1510011	TEMP	0.000	0.922	10.850		[°C]				
1510011	dTz	0.000	0.922	18.000		[°C]				
1510012	TEMP	0.000	0.922	10.850		[°C]				
1510012	dTz	0.000	0.922	18.000		[°C]				
1510013	TEMP	0.000	1.142	10.850		[°C]				
1510013	dTz	0.000	1.142	18.000		[°C]				
1510014	TEMP	0.000	1.815	10.850		[°C]				
1510014	dTz	0.000	1.815	18.000		[°C]				
1510015	TEMP	0.000	1.155	10.850		[°C]				
1510015	dTz	0.000	1.155	18.000		[°C]				
1510016	TEMP	0.000	1.294	10.850		[°C]				
1510016	dTz	0.000	1.294	18.000		[°C]				

SOFiSTiK AG - www.sofistik.de

Composite bridge 38+50+38, b=14.25m, 2x2HL1100R HISTAR460 , slab 0.30m C30/37
Obc termiczne/thermal loads

Loads acting on Beam-elements

Number	Type	a[m]	l[m]	Loadval	Loadval	Dimens.	ya[m]	za[m]	ye[m]	ze[m]
1510017	TEMP	0.000	0.779	10.850		[°C]				
1510017	dTz	0.000	0.779	18.000		[°C]				
1510018	TEMP	0.000	0.779	10.850		[°C]				
1510018	dTz	0.000	0.779	18.000		[°C]				
1510019	TEMP	0.000	0.566	10.850		[°C]				
1510019	dTz	0.000	0.566	18.000		[°C]				
1510020	TEMP	0.000	0.566	10.850		[°C]				
1510020	dTz	0.000	0.566	18.000		[°C]				
1510021	TEMP	0.000	0.348	10.850		[°C]				
1510021	dTz	0.000	0.348	18.000		[°C]				
1510022	TEMP	0.000	0.348	10.850		[°C]				
1510022	dTz	0.000	0.348	18.000		[°C]				
1510023	TEMP	0.000	0.230	10.850		[°C]				
1510023	dTz	0.000	0.230	18.000		[°C]				
1510024	TEMP	0.000	0.230	10.850		[°C]				
1510024	dTz	0.000	0.230	18.000		[°C]				
1510025	TEMP	0.000	0.152	10.850		[°C]				
1510025	dTz	0.000	0.152	18.000		[°C]				
1510026	TEMP	0.000	0.152	10.850		[°C]				
1510026	dTz	0.000	0.152	18.000		[°C]				
1510027	TEMP	0.000	1.515	10.850		[°C]				
1510027	dTz	0.000	1.515	18.000		[°C]				
1510028	TEMP	0.000	1.515	10.850		[°C]				
1510028	dTz	0.000	1.515	18.000		[°C]				
1510029	TEMP	0.000	1.083	10.850		[°C]				
1510029	dTz	0.000	1.083	18.000		[°C]				
1510030	TEMP	0.000	1.084	10.850		[°C]				
1510030	dTz	0.000	1.084	18.000		[°C]				
1510031	TEMP	0.000	0.701	10.850		[°C]				
1510031	dTz	0.000	0.701	18.000		[°C]				
1510032	TEMP	0.000	0.701	10.850		[°C]				
1510032	dTz	0.000	0.701	18.000		[°C]				
1520001	TEMP	0.000	0.152	10.850		[°C]				
1520001	dTz	0.000	0.152	18.000		[°C]				
1520002	TEMP	0.000	0.152	10.850		[°C]				
1520002	dTz	0.000	0.152	18.000		[°C]				
1520003	TEMP	0.000	0.230	10.850		[°C]				
1520003	dTz	0.000	0.230	18.000		[°C]				
1520004	TEMP	0.000	0.230	10.850		[°C]				
1520004	dTz	0.000	0.230	18.000		[°C]				
1520005	TEMP	0.000	0.348	10.850		[°C]				
1520005	dTz	0.000	0.348	18.000		[°C]				
1520006	TEMP	0.000	0.348	10.850		[°C]				
1520006	dTz	0.000	0.348	18.000		[°C]				
1520007	TEMP	0.000	0.566	10.850		[°C]				
1520007	dTz	0.000	0.566	18.000		[°C]				
1520008	TEMP	0.000	0.566	10.850		[°C]				
1520008	dTz	0.000	0.566	18.000		[°C]				
1520009	TEMP	0.000	0.779	10.850		[°C]				
1520009	dTz	0.000	0.779	18.000		[°C]				
1520010	TEMP	0.000	0.779	10.850		[°C]				
1520010	dTz	0.000	0.779	18.000		[°C]				
1520011	TEMP	0.000	1.225	10.850		[°C]				
1520011	dTz	0.000	1.225	18.000		[°C]				
1520012	TEMP	0.000	1.225	10.850		[°C]				
1520012	dTz	0.000	1.225	18.000		[°C]				
1520013	TEMP	0.000	1.188	10.850		[°C]				
1520013	dTz	0.000	1.188	18.000		[°C]				
1520014	TEMP	0.000	1.188	10.850		[°C]				
1520014	dTz	0.000	1.188	18.000		[°C]				
1520015	TEMP	0.000	2.112	10.850		[°C]				
1520015	dTz	0.000	2.112	18.000		[°C]				
1520016	TEMP	0.000	2.112	10.850		[°C]				
1520016	dTz	0.000	2.112	18.000		[°C]				

SOFiSTiK AG - www.sofistik.de

Composite bridge 38+50+38, b=14.25m, 2x2HL1100R HISTAR460 , slab 0.30m C30/37
Obc termiczne/thermal loads

Loads acting on Beam-elements

Number	Type	a[m]	l[m]	Loadval	Loadval	Dimens.	ya[m]	za[m]	ye[m]	ze[m]
1520017	TEMP	0.000	1.191	10.850		[°C]				
1520017	dTz	0.000	1.191	18.000		[°C]				
1520018	TEMP	0.000	1.259	10.850		[°C]				
1520018	dTz	0.000	1.259	18.000		[°C]				
1520019	TEMP	0.000	0.779	10.850		[°C]				
1520019	dTz	0.000	0.779	18.000		[°C]				
1520020	TEMP	0.000	0.779	10.850		[°C]				
1520020	dTz	0.000	0.779	18.000		[°C]				
1520021	TEMP	0.000	0.566	10.850		[°C]				
1520021	dTz	0.000	0.566	18.000		[°C]				
1520022	TEMP	0.000	0.566	10.850		[°C]				
1520022	dTz	0.000	0.566	18.000		[°C]				
1520023	TEMP	0.000	0.348	10.850		[°C]				
1520023	dTz	0.000	0.348	18.000		[°C]				
1520024	TEMP	0.000	0.348	10.850		[°C]				
1520024	dTz	0.000	0.348	18.000		[°C]				
1520025	TEMP	0.000	0.230	10.850		[°C]				
1520025	dTz	0.000	0.230	18.000		[°C]				
1520026	TEMP	0.000	0.230	10.850		[°C]				
1520026	dTz	0.000	0.230	18.000		[°C]				
1520027	TEMP	0.000	0.152	10.850		[°C]				
1520027	dTz	0.000	0.152	18.000		[°C]				
1520028	TEMP	0.000	0.152	10.850		[°C]				
1520028	dTz	0.000	0.152	18.000		[°C]				
1520029	TEMP	0.000	1.588	10.850		[°C]				
1520029	dTz	0.000	1.588	18.000		[°C]				
1520030	TEMP	0.000	1.443	10.850		[°C]				
1520030	dTz	0.000	1.443	18.000		[°C]				
1520031	TEMP	0.000	1.084	10.850		[°C]				
1520031	dTz	0.000	1.084	18.000		[°C]				
1520032	TEMP	0.000	1.083	10.850		[°C]				
1520032	dTz	0.000	1.083	18.000		[°C]				
1520033	TEMP	0.000	0.659	10.850		[°C]				
1520033	dTz	0.000	0.659	18.000		[°C]				
1520034	TEMP	0.000	0.743	10.850		[°C]				
1520034	dTz	0.000	0.743	18.000		[°C]				
1530001	TEMP	0.000	0.164	10.850		[°C]				
1530001	dTz	0.000	0.164	18.000		[°C]				
1530002	TEMP	0.000	0.141	10.850		[°C]				
1530002	dTz	0.000	0.141	18.000		[°C]				
1530003	TEMP	0.000	0.230	10.850		[°C]				
1530003	dTz	0.000	0.230	18.000		[°C]				
1530004	TEMP	0.000	0.230	10.850		[°C]				
1530004	dTz	0.000	0.230	18.000		[°C]				
1530005	TEMP	0.000	0.223	10.850		[°C]				
1530005	dTz	0.000	0.223	18.000		[°C]				
1530006	TEMP	0.000	0.473	10.850		[°C]				
1530006	dTz	0.000	0.473	18.000		[°C]				
1530007	TEMP	0.000	0.615	10.850		[°C]				
1530007	dTz	0.000	0.615	18.000		[°C]				
1530008	TEMP	0.000	0.517	10.850		[°C]				
1530008	dTz	0.000	0.517	18.000		[°C]				
1530009	TEMP	0.000	0.779	10.850		[°C]				
1530009	dTz	0.000	0.779	18.000		[°C]				
1530010	TEMP	0.000	0.779	10.850		[°C]				
1530010	dTz	0.000	0.779	18.000		[°C]				
1530011	TEMP	0.000	1.225	10.850		[°C]				
1530011	dTz	0.000	1.225	18.000		[°C]				
1530012	TEMP	0.000	1.225	10.850		[°C]				
1530012	dTz	0.000	1.225	18.000		[°C]				
1530013	TEMP	0.000	0.988	10.850		[°C]				
1530013	dTz	0.000	0.988	18.000		[°C]				
1530014	TEMP	0.000	1.388	10.850		[°C]				
1530014	dTz	0.000	1.388	18.000		[°C]				

SOFiSTiK AG - www.sofistik.de

Composite bridge 38+50+38, b=14.25m, 2x2HL1100R HISTAR460 , slab 0.30m C30/37
Obc termiczne/thermal loads

Loads acting on Beam-elements

Number	Type	a[m]	l[m]	Loadval	Loadval Dimens.	ya[m]	za[m]	ye[m]	ze[m]
1530015	TEMP	0.000	1.747	10.850	[°C]				
1530015	dTz	0.000	1.747	18.000	[°C]				
1530016	TEMP	0.000	2.477	10.850	[°C]				
1530016	dTz	0.000	2.477	18.000	[°C]				
1530017	TEMP	0.000	0.923	10.850	[°C]				
1530017	dTz	0.000	0.923	18.000	[°C]				
1530018	TEMP	0.000	0.923	10.850	[°C]				
1530018	dTz	0.000	0.923	18.000	[°C]				
1530019	TEMP	0.000	0.659	10.850	[°C]				
1530019	dTz	0.000	0.659	18.000	[°C]				
1530020	TEMP	0.000	0.659	10.850	[°C]				
1530020	dTz	0.000	0.659	18.000	[°C]				
1530021	TEMP	0.000	0.468	10.850	[°C]				
1530021	dTz	0.000	0.468	18.000	[°C]				
1530022	TEMP	0.000	0.334	10.850	[°C]				
1530022	dTz	0.000	0.334	18.000	[°C]				
1530023	TEMP	0.000	0.255	10.850	[°C]				
1530023	dTz	0.000	0.255	18.000	[°C]				
1530024	TEMP	0.000	0.255	10.850	[°C]				
1530024	dTz	0.000	0.255	18.000	[°C]				
1530025	TEMP	0.000	0.162	10.850	[°C]				
1530025	dTz	0.000	0.162	18.000	[°C]				
1530026	TEMP	0.000	0.162	10.850	[°C]				
1530026	dTz	0.000	0.162	18.000	[°C]				
1530027	TEMP	0.000	1.478	10.850	[°C]				
1530027	dTz	0.000	1.478	18.000	[°C]				
1530028	TEMP	0.000	1.478	10.850	[°C]				
1530028	dTz	0.000	1.478	18.000	[°C]				
1530029	TEMP	0.000	0.922	10.850	[°C]				
1530029	dTz	0.000	0.922	18.000	[°C]				
1530030	TEMP	0.000	0.922	10.850	[°C]				
1530030	dTz	0.000	0.922	18.000	[°C]				

Load Case 912 (T_1) TM(18:bot.warm)-wTN

Factor forces and moments		1.000	
Factor dead weight	DL-XX	0.000	
Factor dead weight	DL-YY	0.000	
Factor dead weight	DL-ZZ	0.000	
unfavourable safety factor		1.500	
favourable safety factor		0.000	
Combination coefficient ψ-0		0.600	(rare)
Combination coefficient ψ-1'		1.000	(non frequent)
Combination coefficient ψ-1		0.600	(frequent)
Combination coefficient ψ-2		0.500	(permanent)

Loads partially copied from load case 910 with factor 1.000
Loads partially copied from load case 902 with factor 0.350

Loads

Kind	Referenceto	Projection Coordinates W[m]	X[m]	Y[m]	Z[m]	Type	Loadvalue	
Area						TEMP	-10.500	[°C]
	QGRP	81			activated		100.00	percent
Area						TEMP	-10.500	[°C]
	QGRP	82			activated		100.00	percent
Area						TEMP	-10.500	[°C]
	QGRP	83			activated		100.00	percent

Loads acting on Beam-elements

Number	Type	a[m]	l[m]	Loadval	Loadval Dimens.	ya[m]	za[m]	ye[m]	ze[m]
510001	TEMP	0.000	2.375	-10.500	[°C]				
510001	dTz	0.000	2.375	18.000	[°C]				
510002	TEMP	0.000	2.375	-10.500	[°C]				
510002	dTz	0.000	2.375	18.000	[°C]				
510003	TEMP	0.000	2.375	-10.500	[°C]				

SOFiSTiK AG - www.sofistik.de

Composite bridge 38+50+38, b=14.25m, 2x2HL1100R HISTAR460 , slab 0.30m C30/37
Obc termiczne/thermal loads

Loads acting on Beam-elements

Number	Type	a[m]	l[m]	Loadval	Loadval	Dimens.	ya[m]	za[m]	ye[m]	ze[m]
510003	dTz	0.000	2.375	18.000		[°C]				
510004	TEMP	0.000	2.375	-10.500		[°C]				
510004	dTz	0.000	2.375	18.000		[°C]				
510005	TEMP	0.000	1.625	-10.500		[°C]				
510005	dTz	0.000	1.625	18.000		[°C]				
510006	TEMP	0.000	1.625	-10.500		[°C]				
510006	dTz	0.000	1.625	18.000		[°C]				
510007	TEMP	0.000	1.642	-10.500		[°C]				
510007	dTz	0.000	1.642	18.000		[°C]				
510008	TEMP	0.000	1.608	-10.500		[°C]				
510008	dTz	0.000	1.608	18.000		[°C]				
510009	TEMP	0.000	2.500	-10.500		[°C]				
510009	dTz	0.000	2.500	18.000		[°C]				
510010	TEMP	0.000	2.500	-10.500		[°C]				
510010	dTz	0.000	2.500	18.000		[°C]				
510011	TEMP	0.000	2.000	-10.500		[°C]				
510011	dTz	0.000	2.000	18.000		[°C]				
510012	TEMP	0.000	2.000	-10.500		[°C]				
510012	dTz	0.000	2.000	18.000		[°C]				
510013	TEMP	0.000	2.000	-10.500		[°C]				
510013	dTz	0.000	2.000	18.000		[°C]				
510014	TEMP	0.000	2.000	-10.500		[°C]				
510014	dTz	0.000	2.000	18.000		[°C]				
510015	TEMP	0.000	2.000	-10.500		[°C]				
510015	dTz	0.000	2.000	18.000		[°C]				
510016	TEMP	0.000	2.000	-10.500		[°C]				
510016	dTz	0.000	2.000	18.000		[°C]				
510017	TEMP	0.000	2.172	-10.500		[°C]				
510017	dTz	0.000	2.172	18.000		[°C]				
510018	TEMP	0.000	1.828	-10.500		[°C]				
510018	dTz	0.000	1.828	18.000		[°C]				
510019	TEMP	0.000	2.843	-10.500		[°C]				
510019	dTz	0.000	2.843	18.000		[°C]				
510020	TEMP	0.000	2.157	-10.500		[°C]				
510020	dTz	0.000	2.157	18.000		[°C]				
510021	TEMP	0.000	1.900	-10.500		[°C]				
510021	dTz	0.000	1.900	18.000		[°C]				
510022	TEMP	0.000	1.900	-10.500		[°C]				
510022	dTz	0.000	1.900	18.000		[°C]				
510023	TEMP	0.000	1.900	-10.500		[°C]				
510023	dTz	0.000	1.900	18.000		[°C]				
510024	TEMP	0.000	1.900	-10.500		[°C]				
510024	dTz	0.000	1.900	18.000		[°C]				
520001	TEMP	0.000	1.783	-10.500		[°C]				
520001	dTz	0.000	1.783	18.000		[°C]				
520002	TEMP	0.000	2.383	-10.500		[°C]				
520002	dTz	0.000	2.383	18.000		[°C]				
520003	TEMP	0.000	2.571	-10.500		[°C]				
520003	dTz	0.000	2.571	18.000		[°C]				
520004	TEMP	0.000	1.596	-10.500		[°C]				
520004	dTz	0.000	1.596	18.000		[°C]				
520005	TEMP	0.000	1.883	-10.500		[°C]				
520005	dTz	0.000	1.883	18.000		[°C]				
520006	TEMP	0.000	2.284	-10.500		[°C]				
520006	dTz	0.000	2.284	18.000		[°C]				
520007	TEMP	0.000	2.083	-10.500		[°C]				
520007	dTz	0.000	2.083	18.000		[°C]				
520008	TEMP	0.000	2.083	-10.500		[°C]				
520008	dTz	0.000	2.083	18.000		[°C]				
520009	TEMP	0.000	2.083	-10.500		[°C]				
520009	dTz	0.000	2.083	18.000		[°C]				
520010	TEMP	0.000	2.083	-10.500		[°C]				
520010	dTz	0.000	2.083	18.000		[°C]				
520011	TEMP	0.000	2.083	-10.500		[°C]				

SOFiSTiK AG - www.sofistik.de

Composite bridge 38+50+38, b=14.25m, 2x2HL1100R HISTAR460 , slab 0.30m C30/37
Obc termiczne/thermal loads

Loads acting on Beam-elements

Number	Type	a[m]	l[m]	Loadval	Loadval	Dimens.	ya[m]	za[m]	ye[m]	ze[m]
520011	dTz	0.000	2.083	18.000		[°C]				
520012	TEMP	0.000	2.083	-10.500		[°C]				
520012	dTz	0.000	2.083	18.000		[°C]				
520013	TEMP	0.000	2.500	-10.500		[°C]				
520013	dTz	0.000	2.500	18.000		[°C]				
520014	TEMP	0.000	2.500	-10.500		[°C]				
520014	dTz	0.000	2.500	18.000		[°C]				
520015	TEMP	0.000	1.658	-10.500		[°C]				
520015	dTz	0.000	1.658	18.000		[°C]				
520016	TEMP	0.000	2.509	-10.500		[°C]				
520016	dTz	0.000	2.509	18.000		[°C]				
520017	TEMP	0.000	2.554	-10.500		[°C]				
520017	dTz	0.000	2.554	18.000		[°C]				
520018	TEMP	0.000	1.613	-10.500		[°C]				
520018	dTz	0.000	1.613	18.000		[°C]				
520019	TEMP	0.000	1.892	-10.500		[°C]				
520019	dTz	0.000	1.892	18.000		[°C]				
520020	TEMP	0.000	2.275	-10.500		[°C]				
520020	dTz	0.000	2.275	18.000		[°C]				
520021	TEMP	0.000	2.083	-10.500		[°C]				
520021	dTz	0.000	2.083	18.000		[°C]				
520022	TEMP	0.000	2.083	-10.500		[°C]				
520022	dTz	0.000	2.083	18.000		[°C]				
520023	TEMP	0.000	2.083	-10.500		[°C]				
520023	dTz	0.000	2.083	18.000		[°C]				
520024	TEMP	0.000	2.083	-10.500		[°C]				
520024	dTz	0.000	2.083	18.000		[°C]				
520025	TEMP	0.000	2.083	-10.500		[°C]				
520025	dTz	0.000	2.083	18.000		[°C]				
520026	TEMP	0.000	2.083	-10.500		[°C]				
520026	dTz	0.000	2.083	18.000		[°C]				
520027	TEMP	0.000	2.491	-10.500		[°C]				
520027	dTz	0.000	2.491	18.000		[°C]				
520028	TEMP	0.000	2.509	-10.500		[°C]				
520028	dTz	0.000	2.509	18.000		[°C]				
520029	TEMP	0.000	2.500	-10.500		[°C]				
520029	dTz	0.000	2.500	18.000		[°C]				
520030	TEMP	0.000	2.500	-10.500		[°C]				
520030	dTz	0.000	2.500	18.000		[°C]				
520031	TEMP	0.000	2.500	-10.500		[°C]				
520031	dTz	0.000	2.500	18.000		[°C]				
520032	TEMP	0.000	2.500	-10.500		[°C]				
520032	dTz	0.000	2.500	18.000		[°C]				
530001	TEMP	0.000	1.625	-10.500		[°C]				
530001	dTz	0.000	1.625	18.000		[°C]				
530002	TEMP	0.000	1.625	-10.500		[°C]				
530002	dTz	0.000	1.625	18.000		[°C]				
530003	TEMP	0.000	1.625	-10.500		[°C]				
530003	dTz	0.000	1.625	18.000		[°C]				
530004	TEMP	0.000	1.625	-10.500		[°C]				
530004	dTz	0.000	1.625	18.000		[°C]				
530005	TEMP	0.000	2.375	-10.500		[°C]				
530005	dTz	0.000	2.375	18.000		[°C]				
530006	TEMP	0.000	2.375	-10.500		[°C]				
530006	dTz	0.000	2.375	18.000		[°C]				
530007	TEMP	0.000	2.375	-10.500		[°C]				
530007	dTz	0.000	2.375	18.000		[°C]				
530008	TEMP	0.000	2.375	-10.500		[°C]				
530008	dTz	0.000	2.375	18.000		[°C]				
530009	TEMP	0.000	1.900	-10.500		[°C]				
530009	dTz	0.000	1.900	18.000		[°C]				
530010	TEMP	0.000	1.900	-10.500		[°C]				
530010	dTz	0.000	1.900	18.000		[°C]				
530011	TEMP	0.000	2.000	-10.500		[°C]				

SOFiSTiK AG - www.sofistik.de

Composite bridge 38+50+38, b=14.25m, 2x2HL1100R HISTAR460 , slab 0.30m C30/37
Obc termiczne/thermal loads

Loads acting on Beam-elements

Number	Type	a[m]	l[m]	Loadval	Loadval	Dimens.	ya[m]	za[m]	ye[m]	ze[m]
530011	dTz	0.000	2.000	18.000		[°C]				
530012	TEMP	0.000	2.000	-10.500		[°C]				
530012	dTz	0.000	2.000	18.000		[°C]				
530013	TEMP	0.000	2.000	-10.500		[°C]				
530013	dTz	0.000	2.000	18.000		[°C]				
530014	TEMP	0.000	2.000	-10.500		[°C]				
530014	dTz	0.000	2.000	18.000		[°C]				
530015	TEMP	0.000	2.000	-10.500		[°C]				
530015	dTz	0.000	2.000	18.000		[°C]				
530016	TEMP	0.000	2.000	-10.500		[°C]				
530016	dTz	0.000	2.000	18.000		[°C]				
530017	TEMP	0.000	2.000	-10.500		[°C]				
530017	dTz	0.000	2.000	18.000		[°C]				
530018	TEMP	0.000	2.000	-10.500		[°C]				
530018	dTz	0.000	2.000	18.000		[°C]				
530019	TEMP	0.000	1.900	-10.500		[°C]				
530019	dTz	0.000	1.900	18.000		[°C]				
530020	TEMP	0.000	1.900	-10.500		[°C]				
530020	dTz	0.000	1.900	18.000		[°C]				
530021	TEMP	0.000	2.500	-10.500		[°C]				
530021	dTz	0.000	2.500	18.000		[°C]				
530022	TEMP	0.000	2.500	-10.500		[°C]				
530022	dTz	0.000	2.500	18.000		[°C]				
530023	TEMP	0.000	2.500	-10.500		[°C]				
530023	dTz	0.000	2.500	18.000		[°C]				
530024	TEMP	0.000	2.500	-10.500		[°C]				
530024	dTz	0.000	2.500	18.000		[°C]				
1510001	TEMP	0.000	0.162	-10.500		[°C]				
1510001	dTz	0.000	0.162	18.000		[°C]				
1510002	TEMP	0.000	0.162	-10.500		[°C]				
1510002	dTz	0.000	0.162	18.000		[°C]				
1510003	TEMP	0.000	0.255	-10.500		[°C]				
1510003	dTz	0.000	0.255	18.000		[°C]				
1510004	TEMP	0.000	0.255	-10.500		[°C]				
1510004	dTz	0.000	0.255	18.000		[°C]				
1510005	TEMP	0.000	0.401	-10.500		[°C]				
1510005	dTz	0.000	0.401	18.000		[°C]				
1510006	TEMP	0.000	0.401	-10.500		[°C]				
1510006	dTz	0.000	0.401	18.000		[°C]				
1510007	TEMP	0.000	0.585	-10.500		[°C]				
1510007	dTz	0.000	0.585	18.000		[°C]				
1510008	TEMP	0.000	0.733	-10.500		[°C]				
1510008	dTz	0.000	0.733	18.000		[°C]				
1510009	TEMP	0.000	0.923	-10.500		[°C]				
1510009	dTz	0.000	0.923	18.000		[°C]				
1510010	TEMP	0.000	0.923	-10.500		[°C]				
1510010	dTz	0.000	0.923	18.000		[°C]				
1510011	TEMP	0.000	0.922	-10.500		[°C]				
1510011	dTz	0.000	0.922	18.000		[°C]				
1510012	TEMP	0.000	0.922	-10.500		[°C]				
1510012	dTz	0.000	0.922	18.000		[°C]				
1510013	TEMP	0.000	1.142	-10.500		[°C]				
1510013	dTz	0.000	1.142	18.000		[°C]				
1510014	TEMP	0.000	1.815	-10.500		[°C]				
1510014	dTz	0.000	1.815	18.000		[°C]				
1510015	TEMP	0.000	1.155	-10.500		[°C]				
1510015	dTz	0.000	1.155	18.000		[°C]				
1510016	TEMP	0.000	1.294	-10.500		[°C]				
1510016	dTz	0.000	1.294	18.000		[°C]				
1510017	TEMP	0.000	0.779	-10.500		[°C]				
1510017	dTz	0.000	0.779	18.000		[°C]				
1510018	TEMP	0.000	0.779	-10.500		[°C]				
1510018	dTz	0.000	0.779	18.000		[°C]				
1510019	TEMP	0.000	0.566	-10.500		[°C]				

SOFiSTiK AG - www.sofistik.de

Composite bridge 38+50+38, b=14.25m, 2x2HL1100R HISTAR460 , slab 0.30m C30/37
Obc termiczne/thermal loads

Loads acting on Beam-elements

Number	Type	a[m]	l[m]	Loadval	Loadval	Dimens.	ya[m]	za[m]	ye[m]	ze[m]
1510019	dTz	0.000	0.566	18.000		[°C]				
1510020	TEMP	0.000	0.566	-10.500		[°C]				
1510020	dTz	0.000	0.566	18.000		[°C]				
1510021	TEMP	0.000	0.348	-10.500		[°C]				
1510021	dTz	0.000	0.348	18.000		[°C]				
1510022	TEMP	0.000	0.348	-10.500		[°C]				
1510022	dTz	0.000	0.348	18.000		[°C]				
1510023	TEMP	0.000	0.230	-10.500		[°C]				
1510023	dTz	0.000	0.230	18.000		[°C]				
1510024	TEMP	0.000	0.230	-10.500		[°C]				
1510024	dTz	0.000	0.230	18.000		[°C]				
1510025	TEMP	0.000	0.152	-10.500		[°C]				
1510025	dTz	0.000	0.152	18.000		[°C]				
1510026	TEMP	0.000	0.152	-10.500		[°C]				
1510026	dTz	0.000	0.152	18.000		[°C]				
1510027	TEMP	0.000	1.515	-10.500		[°C]				
1510027	dTz	0.000	1.515	18.000		[°C]				
1510028	TEMP	0.000	1.515	-10.500		[°C]				
1510028	dTz	0.000	1.515	18.000		[°C]				
1510029	TEMP	0.000	1.083	-10.500		[°C]				
1510029	dTz	0.000	1.083	18.000		[°C]				
1510030	TEMP	0.000	1.084	-10.500		[°C]				
1510030	dTz	0.000	1.084	18.000		[°C]				
1510031	TEMP	0.000	0.701	-10.500		[°C]				
1510031	dTz	0.000	0.701	18.000		[°C]				
1510032	TEMP	0.000	0.701	-10.500		[°C]				
1510032	dTz	0.000	0.701	18.000		[°C]				
1520001	TEMP	0.000	0.152	-10.500		[°C]				
1520001	dTz	0.000	0.152	18.000		[°C]				
1520002	TEMP	0.000	0.152	-10.500		[°C]				
1520002	dTz	0.000	0.152	18.000		[°C]				
1520003	TEMP	0.000	0.230	-10.500		[°C]				
1520003	dTz	0.000	0.230	18.000		[°C]				
1520004	TEMP	0.000	0.230	-10.500		[°C]				
1520004	dTz	0.000	0.230	18.000		[°C]				
1520005	TEMP	0.000	0.348	-10.500		[°C]				
1520005	dTz	0.000	0.348	18.000		[°C]				
1520006	TEMP	0.000	0.348	-10.500		[°C]				
1520006	dTz	0.000	0.348	18.000		[°C]				
1520007	TEMP	0.000	0.566	-10.500		[°C]				
1520007	dTz	0.000	0.566	18.000		[°C]				
1520008	TEMP	0.000	0.566	-10.500		[°C]				
1520008	dTz	0.000	0.566	18.000		[°C]				
1520009	TEMP	0.000	0.779	-10.500		[°C]				
1520009	dTz	0.000	0.779	18.000		[°C]				
1520010	TEMP	0.000	0.779	-10.500		[°C]				
1520010	dTz	0.000	0.779	18.000		[°C]				
1520011	TEMP	0.000	1.225	-10.500		[°C]				
1520011	dTz	0.000	1.225	18.000		[°C]				
1520012	TEMP	0.000	1.225	-10.500		[°C]				
1520012	dTz	0.000	1.225	18.000		[°C]				
1520013	TEMP	0.000	1.188	-10.500		[°C]				
1520013	dTz	0.000	1.188	18.000		[°C]				
1520014	TEMP	0.000	1.188	-10.500		[°C]				
1520014	dTz	0.000	1.188	18.000		[°C]				
1520015	TEMP	0.000	2.112	-10.500		[°C]				
1520015	dTz	0.000	2.112	18.000		[°C]				
1520016	TEMP	0.000	2.112	-10.500		[°C]				
1520016	dTz	0.000	2.112	18.000		[°C]				
1520017	TEMP	0.000	1.191	-10.500		[°C]				
1520017	dTz	0.000	1.191	18.000		[°C]				
1520018	TEMP	0.000	1.259	-10.500		[°C]				
1520018	dTz	0.000	1.259	18.000		[°C]				
1520019	TEMP	0.000	0.779	-10.500		[°C]				

SOFiSTiK AG - www.sofistik.de

Composite bridge 38+50+38, b=14.25m, 2x2HL1100R HISTAR460 , slab 0.30m C30/37
Obc termiczne/thermal loads

Loads acting on Beam-elements

Number	Type	a[m]	l[m]	Loadval	Loadval	Dimens.	ya[m]	za[m]	ye[m]	ze[m]
1520019	dTz	0.000	0.779	18.000		[°C]				
1520020	TEMP	0.000	0.779	-10.500		[°C]				
1520020	dTz	0.000	0.779	18.000		[°C]				
1520021	TEMP	0.000	0.566	-10.500		[°C]				
1520021	dTz	0.000	0.566	18.000		[°C]				
1520022	TEMP	0.000	0.566	-10.500		[°C]				
1520022	dTz	0.000	0.566	18.000		[°C]				
1520023	TEMP	0.000	0.348	-10.500		[°C]				
1520023	dTz	0.000	0.348	18.000		[°C]				
1520024	TEMP	0.000	0.348	-10.500		[°C]				
1520024	dTz	0.000	0.348	18.000		[°C]				
1520025	TEMP	0.000	0.230	-10.500		[°C]				
1520025	dTz	0.000	0.230	18.000		[°C]				
1520026	TEMP	0.000	0.230	-10.500		[°C]				
1520026	dTz	0.000	0.230	18.000		[°C]				
1520027	TEMP	0.000	0.152	-10.500		[°C]				
1520027	dTz	0.000	0.152	18.000		[°C]				
1520028	TEMP	0.000	0.152	-10.500		[°C]				
1520028	dTz	0.000	0.152	18.000		[°C]				
1520029	TEMP	0.000	1.588	-10.500		[°C]				
1520029	dTz	0.000	1.588	18.000		[°C]				
1520030	TEMP	0.000	1.443	-10.500		[°C]				
1520030	dTz	0.000	1.443	18.000		[°C]				
1520031	TEMP	0.000	1.084	-10.500		[°C]				
1520031	dTz	0.000	1.084	18.000		[°C]				
1520032	TEMP	0.000	1.083	-10.500		[°C]				
1520032	dTz	0.000	1.083	18.000		[°C]				
1520033	TEMP	0.000	0.659	-10.500		[°C]				
1520033	dTz	0.000	0.659	18.000		[°C]				
1520034	TEMP	0.000	0.743	-10.500		[°C]				
1520034	dTz	0.000	0.743	18.000		[°C]				
1530001	TEMP	0.000	0.164	-10.500		[°C]				
1530001	dTz	0.000	0.164	18.000		[°C]				
1530002	TEMP	0.000	0.141	-10.500		[°C]				
1530002	dTz	0.000	0.141	18.000		[°C]				
1530003	TEMP	0.000	0.230	-10.500		[°C]				
1530003	dTz	0.000	0.230	18.000		[°C]				
1530004	TEMP	0.000	0.230	-10.500		[°C]				
1530004	dTz	0.000	0.230	18.000		[°C]				
1530005	TEMP	0.000	0.223	-10.500		[°C]				
1530005	dTz	0.000	0.223	18.000		[°C]				
1530006	TEMP	0.000	0.473	-10.500		[°C]				
1530006	dTz	0.000	0.473	18.000		[°C]				
1530007	TEMP	0.000	0.615	-10.500		[°C]				
1530007	dTz	0.000	0.615	18.000		[°C]				
1530008	TEMP	0.000	0.517	-10.500		[°C]				
1530008	dTz	0.000	0.517	18.000		[°C]				
1530009	TEMP	0.000	0.779	-10.500		[°C]				
1530009	dTz	0.000	0.779	18.000		[°C]				
1530010	TEMP	0.000	0.779	-10.500		[°C]				
1530010	dTz	0.000	0.779	18.000		[°C]				
1530011	TEMP	0.000	1.225	-10.500		[°C]				
1530011	dTz	0.000	1.225	18.000		[°C]				
1530012	TEMP	0.000	1.225	-10.500		[°C]				
1530012	dTz	0.000	1.225	18.000		[°C]				
1530013	TEMP	0.000	0.988	-10.500		[°C]				
1530013	dTz	0.000	0.988	18.000		[°C]				
1530014	TEMP	0.000	1.388	-10.500		[°C]				
1530014	dTz	0.000	1.388	18.000		[°C]				
1530015	TEMP	0.000	1.747	-10.500		[°C]				
1530015	dTz	0.000	1.747	18.000		[°C]				
1530016	TEMP	0.000	2.477	-10.500		[°C]				
1530016	dTz	0.000	2.477	18.000		[°C]				
1530017	TEMP	0.000	0.923	-10.500		[°C]				

SOFiSTiK AG - www.sofistik.de

Composite bridge 38+50+38, b=14.25m, 2x2HL1100R HISTAR460 , slab 0.30m C30/37
Obc termiczne/thermal loads

Loads acting on Beam-elements

Number	Type	a[m]	l[m]	Loadval	Loadval	Dimens.	ya[m]	za[m]	ye[m]	ze[m]
1530017	dTz	0.000	0.923	18.000		[°C]				
1530018	TEMP	0.000	0.923	-10.500		[°C]				
1530018	dTz	0.000	0.923	18.000		[°C]				
1530019	TEMP	0.000	0.659	-10.500		[°C]				
1530019	dTz	0.000	0.659	18.000		[°C]				
1530020	TEMP	0.000	0.659	-10.500		[°C]				
1530020	dTz	0.000	0.659	18.000		[°C]				
1530021	TEMP	0.000	0.468	-10.500		[°C]				
1530021	dTz	0.000	0.468	18.000		[°C]				
1530022	TEMP	0.000	0.334	-10.500		[°C]				
1530022	dTz	0.000	0.334	18.000		[°C]				
1530023	TEMP	0.000	0.255	-10.500		[°C]				
1530023	dTz	0.000	0.255	18.000		[°C]				
1530024	TEMP	0.000	0.255	-10.500		[°C]				
1530024	dTz	0.000	0.255	18.000		[°C]				
1530025	TEMP	0.000	0.162	-10.500		[°C]				
1530025	dTz	0.000	0.162	18.000		[°C]				
1530026	TEMP	0.000	0.162	-10.500		[°C]				
1530026	dTz	0.000	0.162	18.000		[°C]				
1530027	TEMP	0.000	1.478	-10.500		[°C]				
1530027	dTz	0.000	1.478	18.000		[°C]				
1530028	TEMP	0.000	1.478	-10.500		[°C]				
1530028	dTz	0.000	1.478	18.000		[°C]				
1530029	TEMP	0.000	0.922	-10.500		[°C]				
1530029	dTz	0.000	0.922	18.000		[°C]				
1530030	TEMP	0.000	0.922	-10.500		[°C]				
1530030	dTz	0.000	0.922	18.000		[°C]				

Load Case 913 (T_1) wTM(18:bot.warm)+TN

Factor forces and moments		1.000	
Factor dead weight	DL-XX	0.000	
Factor dead weight	DL-YY	0.000	
Factor dead weight	DL-ZZ	0.000	
unfavourable safety factor		1.500	
favourable safety factor		0.000	
Combination coefficient ψ-0		0.600	(rare)
Combination coefficient ψ-1'		1.000	(non frequent)
Combination coefficient ψ-1		0.600	(frequent)
Combination coefficient ψ-2		0.500	(permanent)

Loads partially copied from load case 910 with factor 0.750
Loads partially copied from load case 901 with factor 1.000

Loads

Kind	Referenceto	Projection Coordinates W[m]	X[m]	Y[m]	Z[m]	Type	Loadvalue
Area						TEMP	31.000 [°C]
	QGRP	81			activated		100.00 percent
Area						TEMP	31.000 [°C]
	QGRP	82			activated		100.00 percent
Area						TEMP	31.000 [°C]
	QGRP	83			activated		100.00 percent

Loads acting on Beam-elements

Number	Type	a[m]	l[m]	Loadval	Loadval	Dimens.	ya[m]	za[m]	ye[m]	ze[m]
510001	TEMP	0.000	2.375	31.000		[°C]				
510001	dTz	0.000	2.375	13.500		[°C]				
510002	TEMP	0.000	2.375	31.000		[°C]				
510002	dTz	0.000	2.375	13.500		[°C]				
510003	TEMP	0.000	2.375	31.000		[°C]				
510003	dTz	0.000	2.375	13.500		[°C]				
510004	TEMP	0.000	2.375	31.000		[°C]				
510004	dTz	0.000	2.375	13.500		[°C]				
510005	TEMP	0.000	1.625	31.000		[°C]				
510005	dTz	0.000	1.625	13.500		[°C]				

SOFiSTiK AG - www.sofistik.de

Composite bridge 38+50+38, b=14.25m, 2x2HL1100R HISTAR460 , slab 0.30m C30/37
Obc termiczne/thermal loads

Loads acting on Beam-elements

Number	Type	a[m]	l[m]	Loadval	Loadval	Dimens.	ya[m]	za[m]	ye[m]	ze[m]
510006	TEMP	0.000	1.625	31.000		[°C]				
510006	dTz	0.000	1.625	13.500		[°C]				
510007	TEMP	0.000	1.642	31.000		[°C]				
510007	dTz	0.000	1.642	13.500		[°C]				
510008	TEMP	0.000	1.608	31.000		[°C]				
510008	dTz	0.000	1.608	13.500		[°C]				
510009	TEMP	0.000	2.500	31.000		[°C]				
510009	dTz	0.000	2.500	13.500		[°C]				
510010	TEMP	0.000	2.500	31.000		[°C]				
510010	dTz	0.000	2.500	13.500		[°C]				
510011	TEMP	0.000	2.000	31.000		[°C]				
510011	dTz	0.000	2.000	13.500		[°C]				
510012	TEMP	0.000	2.000	31.000		[°C]				
510012	dTz	0.000	2.000	13.500		[°C]				
510013	TEMP	0.000	2.000	31.000		[°C]				
510013	dTz	0.000	2.000	13.500		[°C]				
510014	TEMP	0.000	2.000	31.000		[°C]				
510014	dTz	0.000	2.000	13.500		[°C]				
510015	TEMP	0.000	2.000	31.000		[°C]				
510015	dTz	0.000	2.000	13.500		[°C]				
510016	TEMP	0.000	2.000	31.000		[°C]				
510016	dTz	0.000	2.000	13.500		[°C]				
510017	TEMP	0.000	2.172	31.000		[°C]				
510017	dTz	0.000	2.172	13.500		[°C]				
510018	TEMP	0.000	1.828	31.000		[°C]				
510018	dTz	0.000	1.828	13.500		[°C]				
510019	TEMP	0.000	2.843	31.000		[°C]				
510019	dTz	0.000	2.843	13.500		[°C]				
510020	TEMP	0.000	2.157	31.000		[°C]				
510020	dTz	0.000	2.157	13.500		[°C]				
510021	TEMP	0.000	1.900	31.000		[°C]				
510021	dTz	0.000	1.900	13.500		[°C]				
510022	TEMP	0.000	1.900	31.000		[°C]				
510022	dTz	0.000	1.900	13.500		[°C]				
510023	TEMP	0.000	1.900	31.000		[°C]				
510023	dTz	0.000	1.900	13.500		[°C]				
510024	TEMP	0.000	1.900	31.000		[°C]				
510024	dTz	0.000	1.900	13.500		[°C]				
520001	TEMP	0.000	1.783	31.000		[°C]				
520001	dTz	0.000	1.783	13.500		[°C]				
520002	TEMP	0.000	2.383	31.000		[°C]				
520002	dTz	0.000	2.383	13.500		[°C]				
520003	TEMP	0.000	2.571	31.000		[°C]				
520003	dTz	0.000	2.571	13.500		[°C]				
520004	TEMP	0.000	1.596	31.000		[°C]				
520004	dTz	0.000	1.596	13.500		[°C]				
520005	TEMP	0.000	1.883	31.000		[°C]				
520005	dTz	0.000	1.883	13.500		[°C]				
520006	TEMP	0.000	2.284	31.000		[°C]				
520006	dTz	0.000	2.284	13.500		[°C]				
520007	TEMP	0.000	2.083	31.000		[°C]				
520007	dTz	0.000	2.083	13.500		[°C]				
520008	TEMP	0.000	2.083	31.000		[°C]				
520008	dTz	0.000	2.083	13.500		[°C]				
520009	TEMP	0.000	2.083	31.000		[°C]				
520009	dTz	0.000	2.083	13.500		[°C]				
520010	TEMP	0.000	2.083	31.000		[°C]				
520010	dTz	0.000	2.083	13.500		[°C]				
520011	TEMP	0.000	2.083	31.000		[°C]				
520011	dTz	0.000	2.083	13.500		[°C]				
520012	TEMP	0.000	2.083	31.000		[°C]				
520012	dTz	0.000	2.083	13.500		[°C]				
520013	TEMP	0.000	2.500	31.000		[°C]				
520013	dTz	0.000	2.500	13.500		[°C]				

SOFiSTiK AG - www.sofistik.de

Composite bridge 38+50+38, b=14.25m, 2x2HL1100R HISTAR460 , slab 0.30m C30/37
Obc termiczne/thermal loads

Loads acting on Beam-elements

Number	Type	a[m]	l[m]	Loadval	Loadval	Dimens.	ya[m]	za[m]	ye[m]	ze[m]
520014	TEMP	0.000	2.500	31.000		[°C]				
520014	dTz	0.000	2.500	13.500		[°C]				
520015	TEMP	0.000	1.658	31.000		[°C]				
520015	dTz	0.000	1.658	13.500		[°C]				
520016	TEMP	0.000	2.509	31.000		[°C]				
520016	dTz	0.000	2.509	13.500		[°C]				
520017	TEMP	0.000	2.554	31.000		[°C]				
520017	dTz	0.000	2.554	13.500		[°C]				
520018	TEMP	0.000	1.613	31.000		[°C]				
520018	dTz	0.000	1.613	13.500		[°C]				
520019	TEMP	0.000	1.892	31.000		[°C]				
520019	dTz	0.000	1.892	13.500		[°C]				
520020	TEMP	0.000	2.275	31.000		[°C]				
520020	dTz	0.000	2.275	13.500		[°C]				
520021	TEMP	0.000	2.083	31.000		[°C]				
520021	dTz	0.000	2.083	13.500		[°C]				
520022	TEMP	0.000	2.083	31.000		[°C]				
520022	dTz	0.000	2.083	13.500		[°C]				
520023	TEMP	0.000	2.083	31.000		[°C]				
520023	dTz	0.000	2.083	13.500		[°C]				
520024	TEMP	0.000	2.083	31.000		[°C]				
520024	dTz	0.000	2.083	13.500		[°C]				
520025	TEMP	0.000	2.083	31.000		[°C]				
520025	dTz	0.000	2.083	13.500		[°C]				
520026	TEMP	0.000	2.083	31.000		[°C]				
520026	dTz	0.000	2.083	13.500		[°C]				
520027	TEMP	0.000	2.491	31.000		[°C]				
520027	dTz	0.000	2.491	13.500		[°C]				
520028	TEMP	0.000	2.509	31.000		[°C]				
520028	dTz	0.000	2.509	13.500		[°C]				
520029	TEMP	0.000	2.500	31.000		[°C]				
520029	dTz	0.000	2.500	13.500		[°C]				
520030	TEMP	0.000	2.500	31.000		[°C]				
520030	dTz	0.000	2.500	13.500		[°C]				
520031	TEMP	0.000	2.500	31.000		[°C]				
520031	dTz	0.000	2.500	13.500		[°C]				
520032	TEMP	0.000	2.500	31.000		[°C]				
520032	dTz	0.000	2.500	13.500		[°C]				
530001	TEMP	0.000	1.625	31.000		[°C]				
530001	dTz	0.000	1.625	13.500		[°C]				
530002	TEMP	0.000	1.625	31.000		[°C]				
530002	dTz	0.000	1.625	13.500		[°C]				
530003	TEMP	0.000	1.625	31.000		[°C]				
530003	dTz	0.000	1.625	13.500		[°C]				
530004	TEMP	0.000	1.625	31.000		[°C]				
530004	dTz	0.000	1.625	13.500		[°C]				
530005	TEMP	0.000	2.375	31.000		[°C]				
530005	dTz	0.000	2.375	13.500		[°C]				
530006	TEMP	0.000	2.375	31.000		[°C]				
530006	dTz	0.000	2.375	13.500		[°C]				
530007	TEMP	0.000	2.375	31.000		[°C]				
530007	dTz	0.000	2.375	13.500		[°C]				
530008	TEMP	0.000	2.375	31.000		[°C]				
530008	dTz	0.000	2.375	13.500		[°C]				
530009	TEMP	0.000	1.900	31.000		[°C]				
530009	dTz	0.000	1.900	13.500		[°C]				
530010	TEMP	0.000	1.900	31.000		[°C]				
530010	dTz	0.000	1.900	13.500		[°C]				
530011	TEMP	0.000	2.000	31.000		[°C]				
530011	dTz	0.000	2.000	13.500		[°C]				
530012	TEMP	0.000	2.000	31.000		[°C]				
530012	dTz	0.000	2.000	13.500		[°C]				
530013	TEMP	0.000	2.000	31.000		[°C]				
530013	dTz	0.000	2.000	13.500		[°C]				

SOFiSTiK AG - www.sofistik.de

Composite bridge 38+50+38, b=14.25m, 2x2HL1100R HISTAR460 , slab 0.30m C30/37
Obc termiczne/thermal loads

Loads acting on Beam-elements

Number	Type	a[m]	l[m]	Loadval	Loadval	Dimens.	ya[m]	za[m]	ye[m]	ze[m]
530014	TEMP	0.000	2.000	31.000		[°C]				
530014	dTz	0.000	2.000	13.500		[°C]				
530015	TEMP	0.000	2.000	31.000		[°C]				
530015	dTz	0.000	2.000	13.500		[°C]				
530016	TEMP	0.000	2.000	31.000		[°C]				
530016	dTz	0.000	2.000	13.500		[°C]				
530017	TEMP	0.000	2.000	31.000		[°C]				
530017	dTz	0.000	2.000	13.500		[°C]				
530018	TEMP	0.000	2.000	31.000		[°C]				
530018	dTz	0.000	2.000	13.500		[°C]				
530019	TEMP	0.000	1.900	31.000		[°C]				
530019	dTz	0.000	1.900	13.500		[°C]				
530020	TEMP	0.000	1.900	31.000		[°C]				
530020	dTz	0.000	1.900	13.500		[°C]				
530021	TEMP	0.000	2.500	31.000		[°C]				
530021	dTz	0.000	2.500	13.500		[°C]				
530022	TEMP	0.000	2.500	31.000		[°C]				
530022	dTz	0.000	2.500	13.500		[°C]				
530023	TEMP	0.000	2.500	31.000		[°C]				
530023	dTz	0.000	2.500	13.500		[°C]				
530024	TEMP	0.000	2.500	31.000		[°C]				
530024	dTz	0.000	2.500	13.500		[°C]				
1510001	TEMP	0.000	0.162	31.000		[°C]				
1510001	dTz	0.000	0.162	13.500		[°C]				
1510002	TEMP	0.000	0.162	31.000		[°C]				
1510002	dTz	0.000	0.162	13.500		[°C]				
1510003	TEMP	0.000	0.255	31.000		[°C]				
1510003	dTz	0.000	0.255	13.500		[°C]				
1510004	TEMP	0.000	0.255	31.000		[°C]				
1510004	dTz	0.000	0.255	13.500		[°C]				
1510005	TEMP	0.000	0.401	31.000		[°C]				
1510005	dTz	0.000	0.401	13.500		[°C]				
1510006	TEMP	0.000	0.401	31.000		[°C]				
1510006	dTz	0.000	0.401	13.500		[°C]				
1510007	TEMP	0.000	0.585	31.000		[°C]				
1510007	dTz	0.000	0.585	13.500		[°C]				
1510008	TEMP	0.000	0.733	31.000		[°C]				
1510008	dTz	0.000	0.733	13.500		[°C]				
1510009	TEMP	0.000	0.923	31.000		[°C]				
1510009	dTz	0.000	0.923	13.500		[°C]				
1510010	TEMP	0.000	0.923	31.000		[°C]				
1510010	dTz	0.000	0.923	13.500		[°C]				
1510011	TEMP	0.000	0.922	31.000		[°C]				
1510011	dTz	0.000	0.922	13.500		[°C]				
1510012	TEMP	0.000	0.922	31.000		[°C]				
1510012	dTz	0.000	0.922	13.500		[°C]				
1510013	TEMP	0.000	1.142	31.000		[°C]				
1510013	dTz	0.000	1.142	13.500		[°C]				
1510014	TEMP	0.000	1.815	31.000		[°C]				
1510014	dTz	0.000	1.815	13.500		[°C]				
1510015	TEMP	0.000	1.155	31.000		[°C]				
1510015	dTz	0.000	1.155	13.500		[°C]				
1510016	TEMP	0.000	1.294	31.000		[°C]				
1510016	dTz	0.000	1.294	13.500		[°C]				
1510017	TEMP	0.000	0.779	31.000		[°C]				
1510017	dTz	0.000	0.779	13.500		[°C]				
1510018	TEMP	0.000	0.779	31.000		[°C]				
1510018	dTz	0.000	0.779	13.500		[°C]				
1510019	TEMP	0.000	0.566	31.000		[°C]				
1510019	dTz	0.000	0.566	13.500		[°C]				
1510020	TEMP	0.000	0.566	31.000		[°C]				
1510020	dTz	0.000	0.566	13.500		[°C]				
1510021	TEMP	0.000	0.348	31.000		[°C]				
1510021	dTz	0.000	0.348	13.500		[°C]				

SOFiSTiK AG - www.sofistik.de

Composite bridge 38+50+38, b=14.25m, 2x2HL1100R HISTAR460 , slab 0.30m C30/37
Obc termiczne/thermal loads

Loads acting on Beam-elements

Number	Type	a[m]	l[m]	Loadval	Loadval	Dimens.	ya[m]	za[m]	ye[m]	ze[m]
1510022	TEMP	0.000	0.348	31.000		[°C]				
1510022	dTz	0.000	0.348	13.500		[°C]				
1510023	TEMP	0.000	0.230	31.000		[°C]				
1510023	dTz	0.000	0.230	13.500		[°C]				
1510024	TEMP	0.000	0.230	31.000		[°C]				
1510024	dTz	0.000	0.230	13.500		[°C]				
1510025	TEMP	0.000	0.152	31.000		[°C]				
1510025	dTz	0.000	0.152	13.500		[°C]				
1510026	TEMP	0.000	0.152	31.000		[°C]				
1510026	dTz	0.000	0.152	13.500		[°C]				
1510027	TEMP	0.000	1.515	31.000		[°C]				
1510027	dTz	0.000	1.515	13.500		[°C]				
1510028	TEMP	0.000	1.515	31.000		[°C]				
1510028	dTz	0.000	1.515	13.500		[°C]				
1510029	TEMP	0.000	1.083	31.000		[°C]				
1510029	dTz	0.000	1.083	13.500		[°C]				
1510030	TEMP	0.000	1.084	31.000		[°C]				
1510030	dTz	0.000	1.084	13.500		[°C]				
1510031	TEMP	0.000	0.701	31.000		[°C]				
1510031	dTz	0.000	0.701	13.500		[°C]				
1510032	TEMP	0.000	0.701	31.000		[°C]				
1510032	dTz	0.000	0.701	13.500		[°C]				
1520001	TEMP	0.000	0.152	31.000		[°C]				
1520001	dTz	0.000	0.152	13.500		[°C]				
1520002	TEMP	0.000	0.152	31.000		[°C]				
1520002	dTz	0.000	0.152	13.500		[°C]				
1520003	TEMP	0.000	0.230	31.000		[°C]				
1520003	dTz	0.000	0.230	13.500		[°C]				
1520004	TEMP	0.000	0.230	31.000		[°C]				
1520004	dTz	0.000	0.230	13.500		[°C]				
1520005	TEMP	0.000	0.348	31.000		[°C]				
1520005	dTz	0.000	0.348	13.500		[°C]				
1520006	TEMP	0.000	0.348	31.000		[°C]				
1520006	dTz	0.000	0.348	13.500		[°C]				
1520007	TEMP	0.000	0.566	31.000		[°C]				
1520007	dTz	0.000	0.566	13.500		[°C]				
1520008	TEMP	0.000	0.566	31.000		[°C]				
1520008	dTz	0.000	0.566	13.500		[°C]				
1520009	TEMP	0.000	0.779	31.000		[°C]				
1520009	dTz	0.000	0.779	13.500		[°C]				
1520010	TEMP	0.000	0.779	31.000		[°C]				
1520010	dTz	0.000	0.779	13.500		[°C]				
1520011	TEMP	0.000	1.225	31.000		[°C]				
1520011	dTz	0.000	1.225	13.500		[°C]				
1520012	TEMP	0.000	1.225	31.000		[°C]				
1520012	dTz	0.000	1.225	13.500		[°C]				
1520013	TEMP	0.000	1.188	31.000		[°C]				
1520013	dTz	0.000	1.188	13.500		[°C]				
1520014	TEMP	0.000	1.188	31.000		[°C]				
1520014	dTz	0.000	1.188	13.500		[°C]				
1520015	TEMP	0.000	2.112	31.000		[°C]				
1520015	dTz	0.000	2.112	13.500		[°C]				
1520016	TEMP	0.000	2.112	31.000		[°C]				
1520016	dTz	0.000	2.112	13.500		[°C]				
1520017	TEMP	0.000	1.191	31.000		[°C]				
1520017	dTz	0.000	1.191	13.500		[°C]				
1520018	TEMP	0.000	1.259	31.000		[°C]				
1520018	dTz	0.000	1.259	13.500		[°C]				
1520019	TEMP	0.000	0.779	31.000		[°C]				
1520019	dTz	0.000	0.779	13.500		[°C]				
1520020	TEMP	0.000	0.779	31.000		[°C]				
1520020	dTz	0.000	0.779	13.500		[°C]				
1520021	TEMP	0.000	0.566	31.000		[°C]				
1520021	dTz	0.000	0.566	13.500		[°C]				

SOFiSTiK AG - www.sofistik.de

Composite bridge 38+50+38, b=14.25m, 2x2HL1100R HISTAR460 , slab 0.30m C30/37
Obc termiczne/thermal loads

Loads acting on Beam-elements

Number	Type	a[m]	l[m]	Loadval	Loadval	Dimens.	ya[m]	za[m]	ye[m]	ze[m]
1520022	TEMP	0.000	0.566	31.000		[°C]				
1520022	dTz	0.000	0.566	13.500		[°C]				
1520023	TEMP	0.000	0.348	31.000		[°C]				
1520023	dTz	0.000	0.348	13.500		[°C]				
1520024	TEMP	0.000	0.348	31.000		[°C]				
1520024	dTz	0.000	0.348	13.500		[°C]				
1520025	TEMP	0.000	0.230	31.000		[°C]				
1520025	dTz	0.000	0.230	13.500		[°C]				
1520026	TEMP	0.000	0.230	31.000		[°C]				
1520026	dTz	0.000	0.230	13.500		[°C]				
1520027	TEMP	0.000	0.152	31.000		[°C]				
1520027	dTz	0.000	0.152	13.500		[°C]				
1520028	TEMP	0.000	0.152	31.000		[°C]				
1520028	dTz	0.000	0.152	13.500		[°C]				
1520029	TEMP	0.000	1.588	31.000		[°C]				
1520029	dTz	0.000	1.588	13.500		[°C]				
1520030	TEMP	0.000	1.443	31.000		[°C]				
1520030	dTz	0.000	1.443	13.500		[°C]				
1520031	TEMP	0.000	1.084	31.000		[°C]				
1520031	dTz	0.000	1.084	13.500		[°C]				
1520032	TEMP	0.000	1.083	31.000		[°C]				
1520032	dTz	0.000	1.083	13.500		[°C]				
1520033	TEMP	0.000	0.659	31.000		[°C]				
1520033	dTz	0.000	0.659	13.500		[°C]				
1520034	TEMP	0.000	0.743	31.000		[°C]				
1520034	dTz	0.000	0.743	13.500		[°C]				
1530001	TEMP	0.000	0.164	31.000		[°C]				
1530001	dTz	0.000	0.164	13.500		[°C]				
1530002	TEMP	0.000	0.141	31.000		[°C]				
1530002	dTz	0.000	0.141	13.500		[°C]				
1530003	TEMP	0.000	0.230	31.000		[°C]				
1530003	dTz	0.000	0.230	13.500		[°C]				
1530004	TEMP	0.000	0.230	31.000		[°C]				
1530004	dTz	0.000	0.230	13.500		[°C]				
1530005	TEMP	0.000	0.223	31.000		[°C]				
1530005	dTz	0.000	0.223	13.500		[°C]				
1530006	TEMP	0.000	0.473	31.000		[°C]				
1530006	dTz	0.000	0.473	13.500		[°C]				
1530007	TEMP	0.000	0.615	31.000		[°C]				
1530007	dTz	0.000	0.615	13.500		[°C]				
1530008	TEMP	0.000	0.517	31.000		[°C]				
1530008	dTz	0.000	0.517	13.500		[°C]				
1530009	TEMP	0.000	0.779	31.000		[°C]				
1530009	dTz	0.000	0.779	13.500		[°C]				
1530010	TEMP	0.000	0.779	31.000		[°C]				
1530010	dTz	0.000	0.779	13.500		[°C]				
1530011	TEMP	0.000	1.225	31.000		[°C]				
1530011	dTz	0.000	1.225	13.500		[°C]				
1530012	TEMP	0.000	1.225	31.000		[°C]				
1530012	dTz	0.000	1.225	13.500		[°C]				
1530013	TEMP	0.000	0.988	31.000		[°C]				
1530013	dTz	0.000	0.988	13.500		[°C]				
1530014	TEMP	0.000	1.388	31.000		[°C]				
1530014	dTz	0.000	1.388	13.500		[°C]				
1530015	TEMP	0.000	1.747	31.000		[°C]				
1530015	dTz	0.000	1.747	13.500		[°C]				
1530016	TEMP	0.000	2.477	31.000		[°C]				
1530016	dTz	0.000	2.477	13.500		[°C]				
1530017	TEMP	0.000	0.923	31.000		[°C]				
1530017	dTz	0.000	0.923	13.500		[°C]				
1530018	TEMP	0.000	0.923	31.000		[°C]				
1530018	dTz	0.000	0.923	13.500		[°C]				
1530019	TEMP	0.000	0.659	31.000		[°C]				
1530019	dTz	0.000	0.659	13.500		[°C]				

SOFiSTiK AG - www.sofistik.de

Composite bridge 38+50+38, b=14.25m, 2x2HL1100R HISTAR460 , slab 0.30m C30/37
Obc termiczne/thermal loads

Loads acting on Beam-elements

Number	Type	a[m]	l[m]	Loadval	Loadval	Dimens.	ya[m]	za[m]	ye[m]	ze[m]
1530020	TEMP	0.000	0.659	31.000		[°C]				
1530020	dTz	0.000	0.659	13.500		[°C]				
1530021	TEMP	0.000	0.468	31.000		[°C]				
1530021	dTz	0.000	0.468	13.500		[°C]				
1530022	TEMP	0.000	0.334	31.000		[°C]				
1530022	dTz	0.000	0.334	13.500		[°C]				
1530023	TEMP	0.000	0.255	31.000		[°C]				
1530023	dTz	0.000	0.255	13.500		[°C]				
1530024	TEMP	0.000	0.255	31.000		[°C]				
1530024	dTz	0.000	0.255	13.500		[°C]				
1530025	TEMP	0.000	0.162	31.000		[°C]				
1530025	dTz	0.000	0.162	13.500		[°C]				
1530026	TEMP	0.000	0.162	31.000		[°C]				
1530026	dTz	0.000	0.162	13.500		[°C]				
1530027	TEMP	0.000	1.478	31.000		[°C]				
1530027	dTz	0.000	1.478	13.500		[°C]				
1530028	TEMP	0.000	1.478	31.000		[°C]				
1530028	dTz	0.000	1.478	13.500		[°C]				
1530029	TEMP	0.000	0.922	31.000		[°C]				
1530029	dTz	0.000	0.922	13.500		[°C]				
1530030	TEMP	0.000	0.922	31.000		[°C]				
1530030	dTz	0.000	0.922	13.500		[°C]				

Load Case 914 (T_1) wTM(18:bot.warm)-TN

Factor forces and moments		1.000	
Factor dead weight	DL-XX	0.000	
Factor dead weight	DL-YY	0.000	
Factor dead weight	DL-ZZ	0.000	
unfavourable safety factor		1.500	
favourable safety factor		0.000	
Combination coefficient ψ-0		0.600	(rare)
Combination coefficient ψ-1'		1.000	(non frequent)
Combination coefficient ψ-1		0.600	(frequent)
Combination coefficient ψ-2		0.500	(permanent)

Loads partially copied from load case 910 with factor 0.750
Loads partially copied from load case 902 with factor 1.000

Loads

Kind	Referenceto	Projection Coordinates W[m]	X[m]	Y[m]	Z[m]	Type	Loadvalue
Area						TEMP	-30.000 [°C]
	QGRP	81			activated		100.00 percent
Area						TEMP	-30.000 [°C]
	QGRP	82			activated		100.00 percent
Area						TEMP	-30.000 [°C]
	QGRP	83			activated		100.00 percent

Loads acting on Beam-elements

Number	Type	a[m]	l[m]	Loadval	Loadval	Dimens.	ya[m]	za[m]	ye[m]	ze[m]
510001	TEMP	0.000	2.375	-30.000		[°C]				
510001	dTz	0.000	2.375	13.500		[°C]				
510002	TEMP	0.000	2.375	-30.000		[°C]				
510002	dTz	0.000	2.375	13.500		[°C]				
510003	TEMP	0.000	2.375	-30.000		[°C]				
510003	dTz	0.000	2.375	13.500		[°C]				
510004	TEMP	0.000	2.375	-30.000		[°C]				
510004	dTz	0.000	2.375	13.500		[°C]				
510005	TEMP	0.000	1.625	-30.000		[°C]				
510005	dTz	0.000	1.625	13.500		[°C]				
510006	TEMP	0.000	1.625	-30.000		[°C]				
510006	dTz	0.000	1.625	13.500		[°C]				
510007	TEMP	0.000	1.642	-30.000		[°C]				
510007	dTz	0.000	1.642	13.500		[°C]				
510008	TEMP	0.000	1.608	-30.000		[°C]				

SOFiSTiK AG - www.sofistik.de

Composite bridge 38+50+38, b=14.25m, 2x2HL1100R HISTAR460 , slab 0.30m C30/37
Obc termiczne/thermal loads

Loads acting on Beam-elements

Number	Type	a[m]	l[m]	Loadval	Loadval	Dimens.	ya[m]	za[m]	ye[m]	ze[m]
510008	dTz	0.000	1.608	13.500		[°C]				
510009	TEMP	0.000	2.500	-30.000		[°C]				
510009	dTz	0.000	2.500	13.500		[°C]				
510010	TEMP	0.000	2.500	-30.000		[°C]				
510010	dTz	0.000	2.500	13.500		[°C]				
510011	TEMP	0.000	2.000	-30.000		[°C]				
510011	dTz	0.000	2.000	13.500		[°C]				
510012	TEMP	0.000	2.000	-30.000		[°C]				
510012	dTz	0.000	2.000	13.500		[°C]				
510013	TEMP	0.000	2.000	-30.000		[°C]				
510013	dTz	0.000	2.000	13.500		[°C]				
510014	TEMP	0.000	2.000	-30.000		[°C]				
510014	dTz	0.000	2.000	13.500		[°C]				
510015	TEMP	0.000	2.000	-30.000		[°C]				
510015	dTz	0.000	2.000	13.500		[°C]				
510016	TEMP	0.000	2.000	-30.000		[°C]				
510016	dTz	0.000	2.000	13.500		[°C]				
510017	TEMP	0.000	2.172	-30.000		[°C]				
510017	dTz	0.000	2.172	13.500		[°C]				
510018	TEMP	0.000	1.828	-30.000		[°C]				
510018	dTz	0.000	1.828	13.500		[°C]				
510019	TEMP	0.000	2.843	-30.000		[°C]				
510019	dTz	0.000	2.843	13.500		[°C]				
510020	TEMP	0.000	2.157	-30.000		[°C]				
510020	dTz	0.000	2.157	13.500		[°C]				
510021	TEMP	0.000	1.900	-30.000		[°C]				
510021	dTz	0.000	1.900	13.500		[°C]				
510022	TEMP	0.000	1.900	-30.000		[°C]				
510022	dTz	0.000	1.900	13.500		[°C]				
510023	TEMP	0.000	1.900	-30.000		[°C]				
510023	dTz	0.000	1.900	13.500		[°C]				
510024	TEMP	0.000	1.900	-30.000		[°C]				
510024	dTz	0.000	1.900	13.500		[°C]				
520001	TEMP	0.000	1.783	-30.000		[°C]				
520001	dTz	0.000	1.783	13.500		[°C]				
520002	TEMP	0.000	2.383	-30.000		[°C]				
520002	dTz	0.000	2.383	13.500		[°C]				
520003	TEMP	0.000	2.571	-30.000		[°C]				
520003	dTz	0.000	2.571	13.500		[°C]				
520004	TEMP	0.000	1.596	-30.000		[°C]				
520004	dTz	0.000	1.596	13.500		[°C]				
520005	TEMP	0.000	1.883	-30.000		[°C]				
520005	dTz	0.000	1.883	13.500		[°C]				
520006	TEMP	0.000	2.284	-30.000		[°C]				
520006	dTz	0.000	2.284	13.500		[°C]				
520007	TEMP	0.000	2.083	-30.000		[°C]				
520007	dTz	0.000	2.083	13.500		[°C]				
520008	TEMP	0.000	2.083	-30.000		[°C]				
520008	dTz	0.000	2.083	13.500		[°C]				
520009	TEMP	0.000	2.083	-30.000		[°C]				
520009	dTz	0.000	2.083	13.500		[°C]				
520010	TEMP	0.000	2.083	-30.000		[°C]				
520010	dTz	0.000	2.083	13.500		[°C]				
520011	TEMP	0.000	2.083	-30.000		[°C]				
520011	dTz	0.000	2.083	13.500		[°C]				
520012	TEMP	0.000	2.083	-30.000		[°C]				
520012	dTz	0.000	2.083	13.500		[°C]				
520013	TEMP	0.000	2.500	-30.000		[°C]				
520013	dTz	0.000	2.500	13.500		[°C]				
520014	TEMP	0.000	2.500	-30.000		[°C]				
520014	dTz	0.000	2.500	13.500		[°C]				
520015	TEMP	0.000	1.658	-30.000		[°C]				
520015	dTz	0.000	1.658	13.500		[°C]				
520016	TEMP	0.000	2.509	-30.000		[°C]				

SOFiSTiK AG - www.sofistik.de

Composite bridge 38+50+38, b=14.25m, 2x2HL1100R HISTAR460 , slab 0.30m C30/37
Obc termiczne/thermal loads

Loads acting on Beam-elements

Number	Type	a[m]	l[m]	Loadval	Loadval	Dimens.	ya[m]	za[m]	ye[m]	ze[m]
520016	dTz	0.000	2.509	13.500		[°C]				
520017	TEMP	0.000	2.554	-30.000		[°C]				
520017	dTz	0.000	2.554	13.500		[°C]				
520018	TEMP	0.000	1.613	-30.000		[°C]				
520018	dTz	0.000	1.613	13.500		[°C]				
520019	TEMP	0.000	1.892	-30.000		[°C]				
520019	dTz	0.000	1.892	13.500		[°C]				
520020	TEMP	0.000	2.275	-30.000		[°C]				
520020	dTz	0.000	2.275	13.500		[°C]				
520021	TEMP	0.000	2.083	-30.000		[°C]				
520021	dTz	0.000	2.083	13.500		[°C]				
520022	TEMP	0.000	2.083	-30.000		[°C]				
520022	dTz	0.000	2.083	13.500		[°C]				
520023	TEMP	0.000	2.083	-30.000		[°C]				
520023	dTz	0.000	2.083	13.500		[°C]				
520024	TEMP	0.000	2.083	-30.000		[°C]				
520024	dTz	0.000	2.083	13.500		[°C]				
520025	TEMP	0.000	2.083	-30.000		[°C]				
520025	dTz	0.000	2.083	13.500		[°C]				
520026	TEMP	0.000	2.083	-30.000		[°C]				
520026	dTz	0.000	2.083	13.500		[°C]				
520027	TEMP	0.000	2.491	-30.000		[°C]				
520027	dTz	0.000	2.491	13.500		[°C]				
520028	TEMP	0.000	2.509	-30.000		[°C]				
520028	dTz	0.000	2.509	13.500		[°C]				
520029	TEMP	0.000	2.500	-30.000		[°C]				
520029	dTz	0.000	2.500	13.500		[°C]				
520030	TEMP	0.000	2.500	-30.000		[°C]				
520030	dTz	0.000	2.500	13.500		[°C]				
520031	TEMP	0.000	2.500	-30.000		[°C]				
520031	dTz	0.000	2.500	13.500		[°C]				
520032	TEMP	0.000	2.500	-30.000		[°C]				
520032	dTz	0.000	2.500	13.500		[°C]				
530001	TEMP	0.000	1.625	-30.000		[°C]				
530001	dTz	0.000	1.625	13.500		[°C]				
530002	TEMP	0.000	1.625	-30.000		[°C]				
530002	dTz	0.000	1.625	13.500		[°C]				
530003	TEMP	0.000	1.625	-30.000		[°C]				
530003	dTz	0.000	1.625	13.500		[°C]				
530004	TEMP	0.000	1.625	-30.000		[°C]				
530004	dTz	0.000	1.625	13.500		[°C]				
530005	TEMP	0.000	2.375	-30.000		[°C]				
530005	dTz	0.000	2.375	13.500		[°C]				
530006	TEMP	0.000	2.375	-30.000		[°C]				
530006	dTz	0.000	2.375	13.500		[°C]				
530007	TEMP	0.000	2.375	-30.000		[°C]				
530007	dTz	0.000	2.375	13.500		[°C]				
530008	TEMP	0.000	2.375	-30.000		[°C]				
530008	dTz	0.000	2.375	13.500		[°C]				
530009	TEMP	0.000	1.900	-30.000		[°C]				
530009	dTz	0.000	1.900	13.500		[°C]				
530010	TEMP	0.000	1.900	-30.000		[°C]				
530010	dTz	0.000	1.900	13.500		[°C]				
530011	TEMP	0.000	2.000	-30.000		[°C]				
530011	dTz	0.000	2.000	13.500		[°C]				
530012	TEMP	0.000	2.000	-30.000		[°C]				
530012	dTz	0.000	2.000	13.500		[°C]				
530013	TEMP	0.000	2.000	-30.000		[°C]				
530013	dTz	0.000	2.000	13.500		[°C]				
530014	TEMP	0.000	2.000	-30.000		[°C]				
530014	dTz	0.000	2.000	13.500		[°C]				
530015	TEMP	0.000	2.000	-30.000		[°C]				
530015	dTz	0.000	2.000	13.500		[°C]				
530016	TEMP	0.000	2.000	-30.000		[°C]				

SOFiSTiK AG - www.sofistik.de

Composite bridge 38+50+38, b=14.25m, 2x2HL1100R HISTAR460 , slab 0.30m C30/37
Obc termiczne/thermal loads

Loads acting on Beam-elements

Number	Type	a[m]	l[m]	Loadval	Loadval	Dimens.	ya[m]	za[m]	ye[m]	ze[m]
530016	dTz	0.000	2.000	13.500		[°C]				
530017	TEMP	0.000	2.000	-30.000		[°C]				
530017	dTz	0.000	2.000	13.500		[°C]				
530018	TEMP	0.000	2.000	-30.000		[°C]				
530018	dTz	0.000	2.000	13.500		[°C]				
530019	TEMP	0.000	1.900	-30.000		[°C]				
530019	dTz	0.000	1.900	13.500		[°C]				
530020	TEMP	0.000	1.900	-30.000		[°C]				
530020	dTz	0.000	1.900	13.500		[°C]				
530021	TEMP	0.000	2.500	-30.000		[°C]				
530021	dTz	0.000	2.500	13.500		[°C]				
530022	TEMP	0.000	2.500	-30.000		[°C]				
530022	dTz	0.000	2.500	13.500		[°C]				
530023	TEMP	0.000	2.500	-30.000		[°C]				
530023	dTz	0.000	2.500	13.500		[°C]				
530024	TEMP	0.000	2.500	-30.000		[°C]				
530024	dTz	0.000	2.500	13.500		[°C]				
1510001	TEMP	0.000	0.162	-30.000		[°C]				
1510001	dTz	0.000	0.162	13.500		[°C]				
1510002	TEMP	0.000	0.162	-30.000		[°C]				
1510002	dTz	0.000	0.162	13.500		[°C]				
1510003	TEMP	0.000	0.255	-30.000		[°C]				
1510003	dTz	0.000	0.255	13.500		[°C]				
1510004	TEMP	0.000	0.255	-30.000		[°C]				
1510004	dTz	0.000	0.255	13.500		[°C]				
1510005	TEMP	0.000	0.401	-30.000		[°C]				
1510005	dTz	0.000	0.401	13.500		[°C]				
1510006	TEMP	0.000	0.401	-30.000		[°C]				
1510006	dTz	0.000	0.401	13.500		[°C]				
1510007	TEMP	0.000	0.585	-30.000		[°C]				
1510007	dTz	0.000	0.585	13.500		[°C]				
1510008	TEMP	0.000	0.733	-30.000		[°C]				
1510008	dTz	0.000	0.733	13.500		[°C]				
1510009	TEMP	0.000	0.923	-30.000		[°C]				
1510009	dTz	0.000	0.923	13.500		[°C]				
1510010	TEMP	0.000	0.923	-30.000		[°C]				
1510010	dTz	0.000	0.923	13.500		[°C]				
1510011	TEMP	0.000	0.922	-30.000		[°C]				
1510011	dTz	0.000	0.922	13.500		[°C]				
1510012	TEMP	0.000	0.922	-30.000		[°C]				
1510012	dTz	0.000	0.922	13.500		[°C]				
1510013	TEMP	0.000	1.142	-30.000		[°C]				
1510013	dTz	0.000	1.142	13.500		[°C]				
1510014	TEMP	0.000	1.815	-30.000		[°C]				
1510014	dTz	0.000	1.815	13.500		[°C]				
1510015	TEMP	0.000	1.155	-30.000		[°C]				
1510015	dTz	0.000	1.155	13.500		[°C]				
1510016	TEMP	0.000	1.294	-30.000		[°C]				
1510016	dTz	0.000	1.294	13.500		[°C]				
1510017	TEMP	0.000	0.779	-30.000		[°C]				
1510017	dTz	0.000	0.779	13.500		[°C]				
1510018	TEMP	0.000	0.779	-30.000		[°C]				
1510018	dTz	0.000	0.779	13.500		[°C]				
1510019	TEMP	0.000	0.566	-30.000		[°C]				
1510019	dTz	0.000	0.566	13.500		[°C]				
1510020	TEMP	0.000	0.566	-30.000		[°C]				
1510020	dTz	0.000	0.566	13.500		[°C]				
1510021	TEMP	0.000	0.348	-30.000		[°C]				
1510021	dTz	0.000	0.348	13.500		[°C]				
1510022	TEMP	0.000	0.348	-30.000		[°C]				
1510022	dTz	0.000	0.348	13.500		[°C]				
1510023	TEMP	0.000	0.230	-30.000		[°C]				
1510023	dTz	0.000	0.230	13.500		[°C]				
1510024	TEMP	0.000	0.230	-30.000		[°C]				

SOFiSTiK AG - www.sofistik.de

Composite bridge 38+50+38, b=14.25m, 2x2HL1100R HISTAR460 , slab 0.30m C30/37
Obc termiczne/thermal loads

Loads acting on Beam-elements

Number	Type	a[m]	l[m]	Loadval	Loadval	Dimens.	ya[m]	za[m]	ye[m]	ze[m]
1510024	dTz	0.000	0.230	13.500		[°C]				
1510025	TEMP	0.000	0.152	-30.000		[°C]				
1510025	dTz	0.000	0.152	13.500		[°C]				
1510026	TEMP	0.000	0.152	-30.000		[°C]				
1510026	dTz	0.000	0.152	13.500		[°C]				
1510027	TEMP	0.000	1.515	-30.000		[°C]				
1510027	dTz	0.000	1.515	13.500		[°C]				
1510028	TEMP	0.000	1.515	-30.000		[°C]				
1510028	dTz	0.000	1.515	13.500		[°C]				
1510029	TEMP	0.000	1.083	-30.000		[°C]				
1510029	dTz	0.000	1.083	13.500		[°C]				
1510030	TEMP	0.000	1.084	-30.000		[°C]				
1510030	dTz	0.000	1.084	13.500		[°C]				
1510031	TEMP	0.000	0.701	-30.000		[°C]				
1510031	dTz	0.000	0.701	13.500		[°C]				
1510032	TEMP	0.000	0.701	-30.000		[°C]				
1510032	dTz	0.000	0.701	13.500		[°C]				
1520001	TEMP	0.000	0.152	-30.000		[°C]				
1520001	dTz	0.000	0.152	13.500		[°C]				
1520002	TEMP	0.000	0.152	-30.000		[°C]				
1520002	dTz	0.000	0.152	13.500		[°C]				
1520003	TEMP	0.000	0.230	-30.000		[°C]				
1520003	dTz	0.000	0.230	13.500		[°C]				
1520004	TEMP	0.000	0.230	-30.000		[°C]				
1520004	dTz	0.000	0.230	13.500		[°C]				
1520005	TEMP	0.000	0.348	-30.000		[°C]				
1520005	dTz	0.000	0.348	13.500		[°C]				
1520006	TEMP	0.000	0.348	-30.000		[°C]				
1520006	dTz	0.000	0.348	13.500		[°C]				
1520007	TEMP	0.000	0.566	-30.000		[°C]				
1520007	dTz	0.000	0.566	13.500		[°C]				
1520008	TEMP	0.000	0.566	-30.000		[°C]				
1520008	dTz	0.000	0.566	13.500		[°C]				
1520009	TEMP	0.000	0.779	-30.000		[°C]				
1520009	dTz	0.000	0.779	13.500		[°C]				
1520010	TEMP	0.000	0.779	-30.000		[°C]				
1520010	dTz	0.000	0.779	13.500		[°C]				
1520011	TEMP	0.000	1.225	-30.000		[°C]				
1520011	dTz	0.000	1.225	13.500		[°C]				
1520012	TEMP	0.000	1.225	-30.000		[°C]				
1520012	dTz	0.000	1.225	13.500		[°C]				
1520013	TEMP	0.000	1.188	-30.000		[°C]				
1520013	dTz	0.000	1.188	13.500		[°C]				
1520014	TEMP	0.000	1.188	-30.000		[°C]				
1520014	dTz	0.000	1.188	13.500		[°C]				
1520015	TEMP	0.000	2.112	-30.000		[°C]				
1520015	dTz	0.000	2.112	13.500		[°C]				
1520016	TEMP	0.000	2.112	-30.000		[°C]				
1520016	dTz	0.000	2.112	13.500		[°C]				
1520017	TEMP	0.000	1.191	-30.000		[°C]				
1520017	dTz	0.000	1.191	13.500		[°C]				
1520018	TEMP	0.000	1.259	-30.000		[°C]				
1520018	dTz	0.000	1.259	13.500		[°C]				
1520019	TEMP	0.000	0.779	-30.000		[°C]				
1520019	dTz	0.000	0.779	13.500		[°C]				
1520020	TEMP	0.000	0.779	-30.000		[°C]				
1520020	dTz	0.000	0.779	13.500		[°C]				
1520021	TEMP	0.000	0.566	-30.000		[°C]				
1520021	dTz	0.000	0.566	13.500		[°C]				
1520022	TEMP	0.000	0.566	-30.000		[°C]				
1520022	dTz	0.000	0.566	13.500		[°C]				
1520023	TEMP	0.000	0.348	-30.000		[°C]				
1520023	dTz	0.000	0.348	13.500		[°C]				
1520024	TEMP	0.000	0.348	-30.000		[°C]				

SOFiSTiK AG - www.sofistik.de

Composite bridge 38+50+38, b=14.25m, 2x2HL1100R HISTAR460 , slab 0.30m C30/37
Obc termiczne/thermal loads

Loads acting on Beam-elements

Number	Type	a[m]	l[m]	Loadval	Loadval	Dimens.	ya[m]	za[m]	ye[m]	ze[m]
1520024	dTz	0.000	0.348	13.500		[°C]				
1520025	TEMP	0.000	0.230	-30.000		[°C]				
1520025	dTz	0.000	0.230	13.500		[°C]				
1520026	TEMP	0.000	0.230	-30.000		[°C]				
1520026	dTz	0.000	0.230	13.500		[°C]				
1520027	TEMP	0.000	0.152	-30.000		[°C]				
1520027	dTz	0.000	0.152	13.500		[°C]				
1520028	TEMP	0.000	0.152	-30.000		[°C]				
1520028	dTz	0.000	0.152	13.500		[°C]				
1520029	TEMP	0.000	1.588	-30.000		[°C]				
1520029	dTz	0.000	1.588	13.500		[°C]				
1520030	TEMP	0.000	1.443	-30.000		[°C]				
1520030	dTz	0.000	1.443	13.500		[°C]				
1520031	TEMP	0.000	1.084	-30.000		[°C]				
1520031	dTz	0.000	1.084	13.500		[°C]				
1520032	TEMP	0.000	1.083	-30.000		[°C]				
1520032	dTz	0.000	1.083	13.500		[°C]				
1520033	TEMP	0.000	0.659	-30.000		[°C]				
1520033	dTz	0.000	0.659	13.500		[°C]				
1520034	TEMP	0.000	0.743	-30.000		[°C]				
1520034	dTz	0.000	0.743	13.500		[°C]				
1530001	TEMP	0.000	0.164	-30.000		[°C]				
1530001	dTz	0.000	0.164	13.500		[°C]				
1530002	TEMP	0.000	0.141	-30.000		[°C]				
1530002	dTz	0.000	0.141	13.500		[°C]				
1530003	TEMP	0.000	0.230	-30.000		[°C]				
1530003	dTz	0.000	0.230	13.500		[°C]				
1530004	TEMP	0.000	0.230	-30.000		[°C]				
1530004	dTz	0.000	0.230	13.500		[°C]				
1530005	TEMP	0.000	0.223	-30.000		[°C]				
1530005	dTz	0.000	0.223	13.500		[°C]				
1530006	TEMP	0.000	0.473	-30.000		[°C]				
1530006	dTz	0.000	0.473	13.500		[°C]				
1530007	TEMP	0.000	0.615	-30.000		[°C]				
1530007	dTz	0.000	0.615	13.500		[°C]				
1530008	TEMP	0.000	0.517	-30.000		[°C]				
1530008	dTz	0.000	0.517	13.500		[°C]				
1530009	TEMP	0.000	0.779	-30.000		[°C]				
1530009	dTz	0.000	0.779	13.500		[°C]				
1530010	TEMP	0.000	0.779	-30.000		[°C]				
1530010	dTz	0.000	0.779	13.500		[°C]				
1530011	TEMP	0.000	1.225	-30.000		[°C]				
1530011	dTz	0.000	1.225	13.500		[°C]				
1530012	TEMP	0.000	1.225	-30.000		[°C]				
1530012	dTz	0.000	1.225	13.500		[°C]				
1530013	TEMP	0.000	0.988	-30.000		[°C]				
1530013	dTz	0.000	0.988	13.500		[°C]				
1530014	TEMP	0.000	1.388	-30.000		[°C]				
1530014	dTz	0.000	1.388	13.500		[°C]				
1530015	TEMP	0.000	1.747	-30.000		[°C]				
1530015	dTz	0.000	1.747	13.500		[°C]				
1530016	TEMP	0.000	2.477	-30.000		[°C]				
1530016	dTz	0.000	2.477	13.500		[°C]				
1530017	TEMP	0.000	0.923	-30.000		[°C]				
1530017	dTz	0.000	0.923	13.500		[°C]				
1530018	TEMP	0.000	0.923	-30.000		[°C]				
1530018	dTz	0.000	0.923	13.500		[°C]				
1530019	TEMP	0.000	0.659	-30.000		[°C]				
1530019	dTz	0.000	0.659	13.500		[°C]				
1530020	TEMP	0.000	0.659	-30.000		[°C]				
1530020	dTz	0.000	0.659	13.500		[°C]				
1530021	TEMP	0.000	0.468	-30.000		[°C]				
1530021	dTz	0.000	0.468	13.500		[°C]				
1530022	TEMP	0.000	0.334	-30.000		[°C]				

SOFiSTiK AG - www.sofistik.de

Composite bridge 38+50+38, b=14.25m, 2x2HL1100R HISTAR460 , slab 0.30m C30/37
Obc termiczne/thermal loads

Loads acting on Beam-elements

Number	Type	a[m]	l[m]	Loadval	Loadval	Dimens.	ya[m]	za[m]	ye[m]	ze[m]
1530022	dTz	0.000	0.334	13.500		[°C]				
1530023	TEMP	0.000	0.255	-30.000		[°C]				
1530023	dTz	0.000	0.255	13.500		[°C]				
1530024	TEMP	0.000	0.255	-30.000		[°C]				
1530024	dTz	0.000	0.255	13.500		[°C]				
1530025	TEMP	0.000	0.162	-30.000		[°C]				
1530025	dTz	0.000	0.162	13.500		[°C]				
1530026	TEMP	0.000	0.162	-30.000		[°C]				
1530026	dTz	0.000	0.162	13.500		[°C]				
1530027	TEMP	0.000	1.478	-30.000		[°C]				
1530027	dTz	0.000	1.478	13.500		[°C]				
1530028	TEMP	0.000	1.478	-30.000		[°C]				
1530028	dTz	0.000	1.478	13.500		[°C]				
1530029	TEMP	0.000	0.922	-30.000		[°C]				
1530029	dTz	0.000	0.922	13.500		[°C]				
1530030	TEMP	0.000	0.922	-30.000		[°C]				
1530030	dTz	0.000	0.922	13.500		[°C]				

Load Case 920 (T_1) TM:15deg upper warmer

Factor forces and moments		1.000	
Factor dead weight	DL-XX	0.000	
Factor dead weight	DL-YY	0.000	
Factor dead weight	DL-ZZ	0.000	
unfavourable safety factor		1.500	
favourable safety factor		0.000	
Combination coefficient ψ-0		0.600	(rare)
Combination coefficient ψ-1'		1.000	(non frequent)
Combination coefficient ψ-1		0.600	(frequent)
Combination coefficient ψ-2		0.500	(permanent)

Loads acting on Beam-elements

Number	Type	a[m]	l[m]	Loadval	Loadval	Dimens.	ya[m]	za[m]	ye[m]	ze[m]
510001	dTz	0.000	2.375	-15.000		[°C]				
510002	dTz	0.000	2.375	-15.000		[°C]				
510003	dTz	0.000	2.375	-15.000		[°C]				
510004	dTz	0.000	2.375	-15.000		[°C]				
510005	dTz	0.000	1.625	-15.000		[°C]				
510006	dTz	0.000	1.625	-15.000		[°C]				
510007	dTz	0.000	1.642	-15.000		[°C]				
510008	dTz	0.000	1.608	-15.000		[°C]				
510009	dTz	0.000	2.500	-15.000		[°C]				
510010	dTz	0.000	2.500	-15.000		[°C]				
510011	dTz	0.000	2.000	-15.000		[°C]				
510012	dTz	0.000	2.000	-15.000		[°C]				
510013	dTz	0.000	2.000	-15.000		[°C]				
510014	dTz	0.000	2.000	-15.000		[°C]				
510015	dTz	0.000	2.000	-15.000		[°C]				
510016	dTz	0.000	2.000	-15.000		[°C]				
510017	dTz	0.000	2.172	-15.000		[°C]				
510018	dTz	0.000	1.828	-15.000		[°C]				
510019	dTz	0.000	2.843	-15.000		[°C]				
510020	dTz	0.000	2.157	-15.000		[°C]				
510021	dTz	0.000	1.900	-15.000		[°C]				
510022	dTz	0.000	1.900	-15.000		[°C]				
510023	dTz	0.000	1.900	-15.000		[°C]				
510024	dTz	0.000	1.900	-15.000		[°C]				
520001	dTz	0.000	1.783	-15.000		[°C]				
520002	dTz	0.000	2.383	-15.000		[°C]				
520003	dTz	0.000	2.571	-15.000		[°C]				
520004	dTz	0.000	1.596	-15.000		[°C]				
520005	dTz	0.000	1.883	-15.000		[°C]				
520006	dTz	0.000	2.284	-15.000		[°C]				
520007	dTz	0.000	2.083	-15.000		[°C]				
520008	dTz	0.000	2.083	-15.000		[°C]				

SOFiSTiK AG - www.sofistik.de

Composite bridge 38+50+38, b=14.25m, 2x2HL1100R HISTAR460 , slab 0.30m C30/37
Obc termiczne/thermal loads

Loads acting on Beam-elements

Number	Type	a[m]	l[m]	Loadval	Loadval	Dimens.	ya[m]	za[m]	ye[m]	ze[m]
520009	dTz	0.000	2.083	-15.000		[°C]				
520010	dTz	0.000	2.083	-15.000		[°C]				
520011	dTz	0.000	2.083	-15.000		[°C]				
520012	dTz	0.000	2.083	-15.000		[°C]				
520013	dTz	0.000	2.500	-15.000		[°C]				
520014	dTz	0.000	2.500	-15.000		[°C]				
520015	dTz	0.000	1.658	-15.000		[°C]				
520016	dTz	0.000	2.509	-15.000		[°C]				
520017	dTz	0.000	2.554	-15.000		[°C]				
520018	dTz	0.000	1.613	-15.000		[°C]				
520019	dTz	0.000	1.892	-15.000		[°C]				
520020	dTz	0.000	2.275	-15.000		[°C]				
520021	dTz	0.000	2.083	-15.000		[°C]				
520022	dTz	0.000	2.083	-15.000		[°C]				
520023	dTz	0.000	2.083	-15.000		[°C]				
520024	dTz	0.000	2.083	-15.000		[°C]				
520025	dTz	0.000	2.083	-15.000		[°C]				
520026	dTz	0.000	2.083	-15.000		[°C]				
520027	dTz	0.000	2.491	-15.000		[°C]				
520028	dTz	0.000	2.509	-15.000		[°C]				
520029	dTz	0.000	2.500	-15.000		[°C]				
520030	dTz	0.000	2.500	-15.000		[°C]				
520031	dTz	0.000	2.500	-15.000		[°C]				
520032	dTz	0.000	2.500	-15.000		[°C]				
530001	dTz	0.000	1.625	-15.000		[°C]				
530002	dTz	0.000	1.625	-15.000		[°C]				
530003	dTz	0.000	1.625	-15.000		[°C]				
530004	dTz	0.000	1.625	-15.000		[°C]				
530005	dTz	0.000	2.375	-15.000		[°C]				
530006	dTz	0.000	2.375	-15.000		[°C]				
530007	dTz	0.000	2.375	-15.000		[°C]				
530008	dTz	0.000	2.375	-15.000		[°C]				
530009	dTz	0.000	1.900	-15.000		[°C]				
530010	dTz	0.000	1.900	-15.000		[°C]				
530011	dTz	0.000	2.000	-15.000		[°C]				
530012	dTz	0.000	2.000	-15.000		[°C]				
530013	dTz	0.000	2.000	-15.000		[°C]				
530014	dTz	0.000	2.000	-15.000		[°C]				
530015	dTz	0.000	2.000	-15.000		[°C]				
530016	dTz	0.000	2.000	-15.000		[°C]				
530017	dTz	0.000	2.000	-15.000		[°C]				
530018	dTz	0.000	2.000	-15.000		[°C]				
530019	dTz	0.000	1.900	-15.000		[°C]				
530020	dTz	0.000	1.900	-15.000		[°C]				
530021	dTz	0.000	2.500	-15.000		[°C]				
530022	dTz	0.000	2.500	-15.000		[°C]				
530023	dTz	0.000	2.500	-15.000		[°C]				
530024	dTz	0.000	2.500	-15.000		[°C]				
1510001	dTz	0.000	0.162	-15.000		[°C]				
1510002	dTz	0.000	0.162	-15.000		[°C]				
1510003	dTz	0.000	0.255	-15.000		[°C]				
1510004	dTz	0.000	0.255	-15.000		[°C]				
1510005	dTz	0.000	0.401	-15.000		[°C]				
1510006	dTz	0.000	0.401	-15.000		[°C]				
1510007	dTz	0.000	0.585	-15.000		[°C]				
1510008	dTz	0.000	0.733	-15.000		[°C]				
1510009	dTz	0.000	0.923	-15.000		[°C]				
1510010	dTz	0.000	0.923	-15.000		[°C]				
1510011	dTz	0.000	0.922	-15.000		[°C]				
1510012	dTz	0.000	0.922	-15.000		[°C]				
1510013	dTz	0.000	1.142	-15.000		[°C]				
1510014	dTz	0.000	1.815	-15.000		[°C]				
1510015	dTz	0.000	1.155	-15.000		[°C]				
1510016	dTz	0.000	1.294	-15.000		[°C]				

SOFiSTiK AG - www.sofistik.de

Composite bridge 38+50+38, b=14.25m, 2x2HL1100R HISTAR460 , slab 0.30m C30/37
Obc termiczne/thermal loads

Loads acting on Beam-elements

Number	Type	a[m]	l[m]	Loadval	Loadval	Dimens.	ya[m]	za[m]	ye[m]	ze[m]
1510017	dTz	0.000	0.779	-15.000		[°C]				
1510018	dTz	0.000	0.779	-15.000		[°C]				
1510019	dTz	0.000	0.566	-15.000		[°C]				
1510020	dTz	0.000	0.566	-15.000		[°C]				
1510021	dTz	0.000	0.348	-15.000		[°C]				
1510022	dTz	0.000	0.348	-15.000		[°C]				
1510023	dTz	0.000	0.230	-15.000		[°C]				
1510024	dTz	0.000	0.230	-15.000		[°C]				
1510025	dTz	0.000	0.152	-15.000		[°C]				
1510026	dTz	0.000	0.152	-15.000		[°C]				
1510027	dTz	0.000	1.515	-15.000		[°C]				
1510028	dTz	0.000	1.515	-15.000		[°C]				
1510029	dTz	0.000	1.083	-15.000		[°C]				
1510030	dTz	0.000	1.084	-15.000		[°C]				
1510031	dTz	0.000	0.701	-15.000		[°C]				
1510032	dTz	0.000	0.701	-15.000		[°C]				
1520001	dTz	0.000	0.152	-15.000		[°C]				
1520002	dTz	0.000	0.152	-15.000		[°C]				
1520003	dTz	0.000	0.230	-15.000		[°C]				
1520004	dTz	0.000	0.230	-15.000		[°C]				
1520005	dTz	0.000	0.348	-15.000		[°C]				
1520006	dTz	0.000	0.348	-15.000		[°C]				
1520007	dTz	0.000	0.566	-15.000		[°C]				
1520008	dTz	0.000	0.566	-15.000		[°C]				
1520009	dTz	0.000	0.779	-15.000		[°C]				
1520010	dTz	0.000	0.779	-15.000		[°C]				
1520011	dTz	0.000	1.225	-15.000		[°C]				
1520012	dTz	0.000	1.225	-15.000		[°C]				
1520013	dTz	0.000	1.188	-15.000		[°C]				
1520014	dTz	0.000	1.188	-15.000		[°C]				
1520015	dTz	0.000	2.112	-15.000		[°C]				
1520016	dTz	0.000	2.112	-15.000		[°C]				
1520017	dTz	0.000	1.191	-15.000		[°C]				
1520018	dTz	0.000	1.259	-15.000		[°C]				
1520019	dTz	0.000	0.779	-15.000		[°C]				
1520020	dTz	0.000	0.779	-15.000		[°C]				
1520021	dTz	0.000	0.566	-15.000		[°C]				
1520022	dTz	0.000	0.566	-15.000		[°C]				
1520023	dTz	0.000	0.348	-15.000		[°C]				
1520024	dTz	0.000	0.348	-15.000		[°C]				
1520025	dTz	0.000	0.230	-15.000		[°C]				
1520026	dTz	0.000	0.230	-15.000		[°C]				
1520027	dTz	0.000	0.152	-15.000		[°C]				
1520028	dTz	0.000	0.152	-15.000		[°C]				
1520029	dTz	0.000	1.588	-15.000		[°C]				
1520030	dTz	0.000	1.443	-15.000		[°C]				
1520031	dTz	0.000	1.084	-15.000		[°C]				
1520032	dTz	0.000	1.083	-15.000		[°C]				
1520033	dTz	0.000	0.659	-15.000		[°C]				
1520034	dTz	0.000	0.743	-15.000		[°C]				
1530001	dTz	0.000	0.164	-15.000		[°C]				
1530002	dTz	0.000	0.141	-15.000		[°C]				
1530003	dTz	0.000	0.230	-15.000		[°C]				
1530004	dTz	0.000	0.230	-15.000		[°C]				
1530005	dTz	0.000	0.223	-15.000		[°C]				
1530006	dTz	0.000	0.473	-15.000		[°C]				
1530007	dTz	0.000	0.615	-15.000		[°C]				
1530008	dTz	0.000	0.517	-15.000		[°C]				
1530009	dTz	0.000	0.779	-15.000		[°C]				
1530010	dTz	0.000	0.779	-15.000		[°C]				
1530011	dTz	0.000	1.225	-15.000		[°C]				
1530012	dTz	0.000	1.225	-15.000		[°C]				
1530013	dTz	0.000	0.988	-15.000		[°C]				
1530014	dTz	0.000	1.388	-15.000		[°C]				

SOFiSTiK AG - www.sofistik.de

Composite bridge 38+50+38, b=14.25m, 2x2HL1100R HISTAR460 , slab 0.30m C30/37
Obc termiczne/thermal loads

Loads acting on Beam-elements

Number	Type	a[m]	l[m]	Loadval	Loadval	Dimens.	ya[m]	za[m]	ye[m]	ze[m]
1530015	dTz	0.000	1.747	-15.000		[°C]				
1530016	dTz	0.000	2.477	-15.000		[°C]				
1530017	dTz	0.000	0.923	-15.000		[°C]				
1530018	dTz	0.000	0.923	-15.000		[°C]				
1530019	dTz	0.000	0.659	-15.000		[°C]				
1530020	dTz	0.000	0.659	-15.000		[°C]				
1530021	dTz	0.000	0.468	-15.000		[°C]				
1530022	dTz	0.000	0.334	-15.000		[°C]				
1530023	dTz	0.000	0.255	-15.000		[°C]				
1530024	dTz	0.000	0.255	-15.000		[°C]				
1530025	dTz	0.000	0.162	-15.000		[°C]				
1530026	dTz	0.000	0.162	-15.000		[°C]				
1530027	dTz	0.000	1.478	-15.000		[°C]				
1530028	dTz	0.000	1.478	-15.000		[°C]				
1530029	dTz	0.000	0.922	-15.000		[°C]				
1530030	dTz	0.000	0.922	-15.000		[°C]				

Load Case 921 (T_1) TM(15:up.warm)+wTN

Factor forces and moments		1.000	
Factor dead weight	DL-XX	0.000	
Factor dead weight	DL-YY	0.000	
Factor dead weight	DL-ZZ	0.000	
unfavourable safety factor		1.500	
favourable safety factor		0.000	
Combination coefficient ψ-0		0.600	(rare)
Combination coefficient ψ-1'		1.000	(non frequent)
Combination coefficient ψ-1		0.600	(frequent)
Combination coefficient ψ-2		0.500	(permanent)

Loads partially copied from load case 920 with factor 1.000
Loads partially copied from load case 901 with factor 0.350

Loads

Kind	Referenceto		Projection Coordinates W[m]	X[m]	Y[m]	Z[m]	Type	Loadvalue
Area							TEMP	10.850 [°C]
	QGRP	81				activated		100.00 percent
Area							TEMP	10.850 [°C]
	QGRP	82				activated		100.00 percent
Area							TEMP	10.850 [°C]
	QGRP	83				activated		100.00 percent

Loads acting on Beam-elements

Number	Type	a[m]	l[m]	Loadval	Loadval	Dimens.	ya[m]	za[m]	ye[m]	ze[m]
510001	TEMP	0.000	2.375	10.850		[°C]				
510001	dTz	0.000	2.375	-15.000		[°C]				
510002	TEMP	0.000	2.375	10.850		[°C]				
510002	dTz	0.000	2.375	-15.000		[°C]				
510003	TEMP	0.000	2.375	10.850		[°C]				
510003	dTz	0.000	2.375	-15.000		[°C]				
510004	TEMP	0.000	2.375	10.850		[°C]				
510004	dTz	0.000	2.375	-15.000		[°C]				
510005	TEMP	0.000	1.625	10.850		[°C]				
510005	dTz	0.000	1.625	-15.000		[°C]				
510006	TEMP	0.000	1.625	10.850		[°C]				
510006	dTz	0.000	1.625	-15.000		[°C]				
510007	TEMP	0.000	1.642	10.850		[°C]				
510007	dTz	0.000	1.642	-15.000		[°C]				
510008	TEMP	0.000	1.608	10.850		[°C]				
510008	dTz	0.000	1.608	-15.000		[°C]				
510009	TEMP	0.000	2.500	10.850		[°C]				
510009	dTz	0.000	2.500	-15.000		[°C]				
510010	TEMP	0.000	2.500	10.850		[°C]				
510010	dTz	0.000	2.500	-15.000		[°C]				
510011	TEMP	0.000	2.000	10.850		[°C]				

SOFiSTiK AG - www.sofistik.de

Composite bridge 38+50+38, b=14.25m, 2x2HL1100R HISTAR460 , slab 0.30m C30/37
Obc termiczne/thermal loads

Loads acting on Beam-elements

Number	Type	a[m]	l[m]	Loadval	Loadval	Dimens.	ya[m]	za[m]	ye[m]	ze[m]
510011	dTz	0.000	2.000	-15.000		[°C]				
510012	TEMP	0.000	2.000	10.850		[°C]				
510012	dTz	0.000	2.000	-15.000		[°C]				
510013	TEMP	0.000	2.000	10.850		[°C]				
510013	dTz	0.000	2.000	-15.000		[°C]				
510014	TEMP	0.000	2.000	10.850		[°C]				
510014	dTz	0.000	2.000	-15.000		[°C]				
510015	TEMP	0.000	2.000	10.850		[°C]				
510015	dTz	0.000	2.000	-15.000		[°C]				
510016	TEMP	0.000	2.000	10.850		[°C]				
510016	dTz	0.000	2.000	-15.000		[°C]				
510017	TEMP	0.000	2.172	10.850		[°C]				
510017	dTz	0.000	2.172	-15.000		[°C]				
510018	TEMP	0.000	1.828	10.850		[°C]				
510018	dTz	0.000	1.828	-15.000		[°C]				
510019	TEMP	0.000	2.843	10.850		[°C]				
510019	dTz	0.000	2.843	-15.000		[°C]				
510020	TEMP	0.000	2.157	10.850		[°C]				
510020	dTz	0.000	2.157	-15.000		[°C]				
510021	TEMP	0.000	1.900	10.850		[°C]				
510021	dTz	0.000	1.900	-15.000		[°C]				
510022	TEMP	0.000	1.900	10.850		[°C]				
510022	dTz	0.000	1.900	-15.000		[°C]				
510023	TEMP	0.000	1.900	10.850		[°C]				
510023	dTz	0.000	1.900	-15.000		[°C]				
510024	TEMP	0.000	1.900	10.850		[°C]				
510024	dTz	0.000	1.900	-15.000		[°C]				
520001	TEMP	0.000	1.783	10.850		[°C]				
520001	dTz	0.000	1.783	-15.000		[°C]				
520002	TEMP	0.000	2.383	10.850		[°C]				
520002	dTz	0.000	2.383	-15.000		[°C]				
520003	TEMP	0.000	2.571	10.850		[°C]				
520003	dTz	0.000	2.571	-15.000		[°C]				
520004	TEMP	0.000	1.596	10.850		[°C]				
520004	dTz	0.000	1.596	-15.000		[°C]				
520005	TEMP	0.000	1.883	10.850		[°C]				
520005	dTz	0.000	1.883	-15.000		[°C]				
520006	TEMP	0.000	2.284	10.850		[°C]				
520006	dTz	0.000	2.284	-15.000		[°C]				
520007	TEMP	0.000	2.083	10.850		[°C]				
520007	dTz	0.000	2.083	-15.000		[°C]				
520008	TEMP	0.000	2.083	10.850		[°C]				
520008	dTz	0.000	2.083	-15.000		[°C]				
520009	TEMP	0.000	2.083	10.850		[°C]				
520009	dTz	0.000	2.083	-15.000		[°C]				
520010	TEMP	0.000	2.083	10.850		[°C]				
520010	dTz	0.000	2.083	-15.000		[°C]				
520011	TEMP	0.000	2.083	10.850		[°C]				
520011	dTz	0.000	2.083	-15.000		[°C]				
520012	TEMP	0.000	2.083	10.850		[°C]				
520012	dTz	0.000	2.083	-15.000		[°C]				
520013	TEMP	0.000	2.500	10.850		[°C]				
520013	dTz	0.000	2.500	-15.000		[°C]				
520014	TEMP	0.000	2.500	10.850		[°C]				
520014	dTz	0.000	2.500	-15.000		[°C]				
520015	TEMP	0.000	1.658	10.850		[°C]				
520015	dTz	0.000	1.658	-15.000		[°C]				
520016	TEMP	0.000	2.509	10.850		[°C]				
520016	dTz	0.000	2.509	-15.000		[°C]				
520017	TEMP	0.000	2.554	10.850		[°C]				
520017	dTz	0.000	2.554	-15.000		[°C]				
520018	TEMP	0.000	1.613	10.850		[°C]				
520018	dTz	0.000	1.613	-15.000		[°C]				
520019	TEMP	0.000	1.892	10.850		[°C]				

SOFiSTiK AG - www.sofistik.de

Composite bridge 38+50+38, b=14.25m, 2x2HL1100R HISTAR460 , slab 0.30m C30/37
Obc termiczne/thermal loads

Loads acting on Beam-elements

Number	Type	a[m]	l[m]	Loadval	Loadval	Dimens.	ya[m]	za[m]	ye[m]	ze[m]
520019	dTz	0.000	1.892	-15.000		[°C]				
520020	TEMP	0.000	2.275	10.850		[°C]				
520020	dTz	0.000	2.275	-15.000		[°C]				
520021	TEMP	0.000	2.083	10.850		[°C]				
520021	dTz	0.000	2.083	-15.000		[°C]				
520022	TEMP	0.000	2.083	10.850		[°C]				
520022	dTz	0.000	2.083	-15.000		[°C]				
520023	TEMP	0.000	2.083	10.850		[°C]				
520023	dTz	0.000	2.083	-15.000		[°C]				
520024	TEMP	0.000	2.083	10.850		[°C]				
520024	dTz	0.000	2.083	-15.000		[°C]				
520025	TEMP	0.000	2.083	10.850		[°C]				
520025	dTz	0.000	2.083	-15.000		[°C]				
520026	TEMP	0.000	2.083	10.850		[°C]				
520026	dTz	0.000	2.083	-15.000		[°C]				
520027	TEMP	0.000	2.491	10.850		[°C]				
520027	dTz	0.000	2.491	-15.000		[°C]				
520028	TEMP	0.000	2.509	10.850		[°C]				
520028	dTz	0.000	2.509	-15.000		[°C]				
520029	TEMP	0.000	2.500	10.850		[°C]				
520029	dTz	0.000	2.500	-15.000		[°C]				
520030	TEMP	0.000	2.500	10.850		[°C]				
520030	dTz	0.000	2.500	-15.000		[°C]				
520031	TEMP	0.000	2.500	10.850		[°C]				
520031	dTz	0.000	2.500	-15.000		[°C]				
520032	TEMP	0.000	2.500	10.850		[°C]				
520032	dTz	0.000	2.500	-15.000		[°C]				
530001	TEMP	0.000	1.625	10.850		[°C]				
530001	dTz	0.000	1.625	-15.000		[°C]				
530002	TEMP	0.000	1.625	10.850		[°C]				
530002	dTz	0.000	1.625	-15.000		[°C]				
530003	TEMP	0.000	1.625	10.850		[°C]				
530003	dTz	0.000	1.625	-15.000		[°C]				
530004	TEMP	0.000	1.625	10.850		[°C]				
530004	dTz	0.000	1.625	-15.000		[°C]				
530005	TEMP	0.000	2.375	10.850		[°C]				
530005	dTz	0.000	2.375	-15.000		[°C]				
530006	TEMP	0.000	2.375	10.850		[°C]				
530006	dTz	0.000	2.375	-15.000		[°C]				
530007	TEMP	0.000	2.375	10.850		[°C]				
530007	dTz	0.000	2.375	-15.000		[°C]				
530008	TEMP	0.000	2.375	10.850		[°C]				
530008	dTz	0.000	2.375	-15.000		[°C]				
530009	TEMP	0.000	1.900	10.850		[°C]				
530009	dTz	0.000	1.900	-15.000		[°C]				
530010	TEMP	0.000	1.900	10.850		[°C]				
530010	dTz	0.000	1.900	-15.000		[°C]				
530011	TEMP	0.000	2.000	10.850		[°C]				
530011	dTz	0.000	2.000	-15.000		[°C]				
530012	TEMP	0.000	2.000	10.850		[°C]				
530012	dTz	0.000	2.000	-15.000		[°C]				
530013	TEMP	0.000	2.000	10.850		[°C]				
530013	dTz	0.000	2.000	-15.000		[°C]				
530014	TEMP	0.000	2.000	10.850		[°C]				
530014	dTz	0.000	2.000	-15.000		[°C]				
530015	TEMP	0.000	2.000	10.850		[°C]				
530015	dTz	0.000	2.000	-15.000		[°C]				
530016	TEMP	0.000	2.000	10.850		[°C]				
530016	dTz	0.000	2.000	-15.000		[°C]				
530017	TEMP	0.000	2.000	10.850		[°C]				
530017	dTz	0.000	2.000	-15.000		[°C]				
530018	TEMP	0.000	2.000	10.850		[°C]				
530018	dTz	0.000	2.000	-15.000		[°C]				
530019	TEMP	0.000	1.900	10.850		[°C]				

SOFiSTiK AG - www.sofistik.de

Composite bridge 38+50+38, b=14.25m, 2x2HL1100R HISTAR460 , slab 0.30m C30/37
Obc termiczne/thermal loads

Loads acting on Beam-elements

Number	Type	a[m]	l[m]	Loadval	Loadval	Dimens.	ya[m]	za[m]	ye[m]	ze[m]
530019	dTz	0.000	1.900	-15.000		[°C]				
530020	TEMP	0.000	1.900	10.850		[°C]				
530020	dTz	0.000	1.900	-15.000		[°C]				
530021	TEMP	0.000	2.500	10.850		[°C]				
530021	dTz	0.000	2.500	-15.000		[°C]				
530022	TEMP	0.000	2.500	10.850		[°C]				
530022	dTz	0.000	2.500	-15.000		[°C]				
530023	TEMP	0.000	2.500	10.850		[°C]				
530023	dTz	0.000	2.500	-15.000		[°C]				
530024	TEMP	0.000	2.500	10.850		[°C]				
530024	dTz	0.000	2.500	-15.000		[°C]				
1510001	TEMP	0.000	0.162	10.850		[°C]				
1510001	dTz	0.000	0.162	-15.000		[°C]				
1510002	TEMP	0.000	0.162	10.850		[°C]				
1510002	dTz	0.000	0.162	-15.000		[°C]				
1510003	TEMP	0.000	0.255	10.850		[°C]				
1510003	dTz	0.000	0.255	-15.000		[°C]				
1510004	TEMP	0.000	0.255	10.850		[°C]				
1510004	dTz	0.000	0.255	-15.000		[°C]				
1510005	TEMP	0.000	0.401	10.850		[°C]				
1510005	dTz	0.000	0.401	-15.000		[°C]				
1510006	TEMP	0.000	0.401	10.850		[°C]				
1510006	dTz	0.000	0.401	-15.000		[°C]				
1510007	TEMP	0.000	0.585	10.850		[°C]				
1510007	dTz	0.000	0.585	-15.000		[°C]				
1510008	TEMP	0.000	0.733	10.850		[°C]				
1510008	dTz	0.000	0.733	-15.000		[°C]				
1510009	TEMP	0.000	0.923	10.850		[°C]				
1510009	dTz	0.000	0.923	-15.000		[°C]				
1510010	TEMP	0.000	0.923	10.850		[°C]				
1510010	dTz	0.000	0.923	-15.000		[°C]				
1510011	TEMP	0.000	0.922	10.850		[°C]				
1510011	dTz	0.000	0.922	-15.000		[°C]				
1510012	TEMP	0.000	0.922	10.850		[°C]				
1510012	dTz	0.000	0.922	-15.000		[°C]				
1510013	TEMP	0.000	1.142	10.850		[°C]				
1510013	dTz	0.000	1.142	-15.000		[°C]				
1510014	TEMP	0.000	1.815	10.850		[°C]				
1510014	dTz	0.000	1.815	-15.000		[°C]				
1510015	TEMP	0.000	1.155	10.850		[°C]				
1510015	dTz	0.000	1.155	-15.000		[°C]				
1510016	TEMP	0.000	1.294	10.850		[°C]				
1510016	dTz	0.000	1.294	-15.000		[°C]				
1510017	TEMP	0.000	0.779	10.850		[°C]				
1510017	dTz	0.000	0.779	-15.000		[°C]				
1510018	TEMP	0.000	0.779	10.850		[°C]				
1510018	dTz	0.000	0.779	-15.000		[°C]				
1510019	TEMP	0.000	0.566	10.850		[°C]				
1510019	dTz	0.000	0.566	-15.000		[°C]				
1510020	TEMP	0.000	0.566	10.850		[°C]				
1510020	dTz	0.000	0.566	-15.000		[°C]				
1510021	TEMP	0.000	0.348	10.850		[°C]				
1510021	dTz	0.000	0.348	-15.000		[°C]				
1510022	TEMP	0.000	0.348	10.850		[°C]				
1510022	dTz	0.000	0.348	-15.000		[°C]				
1510023	TEMP	0.000	0.230	10.850		[°C]				
1510023	dTz	0.000	0.230	-15.000		[°C]				
1510024	TEMP	0.000	0.230	10.850		[°C]				
1510024	dTz	0.000	0.230	-15.000		[°C]				
1510025	TEMP	0.000	0.152	10.850		[°C]				
1510025	dTz	0.000	0.152	-15.000		[°C]				
1510026	TEMP	0.000	0.152	10.850		[°C]				
1510026	dTz	0.000	0.152	-15.000		[°C]				
1510027	TEMP	0.000	1.515	10.850		[°C]				

SOFiSTiK AG - www.sofistik.de

Composite bridge 38+50+38, b=14.25m, 2x2HL1100R HISTAR460 , slab 0.30m C30/37
Obc termiczne/thermal loads

Loads acting on Beam-elements

Number	Type	a[m]	l[m]	Loadval	Loadval	Dimens.	ya[m]	za[m]	ye[m]	ze[m]
1510027	dTz	0.000	1.515	-15.000		[°C]				
1510028	TEMP	0.000	1.515	10.850		[°C]				
1510028	dTz	0.000	1.515	-15.000		[°C]				
1510029	TEMP	0.000	1.083	10.850		[°C]				
1510029	dTz	0.000	1.083	-15.000		[°C]				
1510030	TEMP	0.000	1.084	10.850		[°C]				
1510030	dTz	0.000	1.084	-15.000		[°C]				
1510031	TEMP	0.000	0.701	10.850		[°C]				
1510031	dTz	0.000	0.701	-15.000		[°C]				
1510032	TEMP	0.000	0.701	10.850		[°C]				
1510032	dTz	0.000	0.701	-15.000		[°C]				
1520001	TEMP	0.000	0.152	10.850		[°C]				
1520001	dTz	0.000	0.152	-15.000		[°C]				
1520002	TEMP	0.000	0.152	10.850		[°C]				
1520002	dTz	0.000	0.152	-15.000		[°C]				
1520003	TEMP	0.000	0.230	10.850		[°C]				
1520003	dTz	0.000	0.230	-15.000		[°C]				
1520004	TEMP	0.000	0.230	10.850		[°C]				
1520004	dTz	0.000	0.230	-15.000		[°C]				
1520005	TEMP	0.000	0.348	10.850		[°C]				
1520005	dTz	0.000	0.348	-15.000		[°C]				
1520006	TEMP	0.000	0.348	10.850		[°C]				
1520006	dTz	0.000	0.348	-15.000		[°C]				
1520007	TEMP	0.000	0.566	10.850		[°C]				
1520007	dTz	0.000	0.566	-15.000		[°C]				
1520008	TEMP	0.000	0.566	10.850		[°C]				
1520008	dTz	0.000	0.566	-15.000		[°C]				
1520009	TEMP	0.000	0.779	10.850		[°C]				
1520009	dTz	0.000	0.779	-15.000		[°C]				
1520010	TEMP	0.000	0.779	10.850		[°C]				
1520010	dTz	0.000	0.779	-15.000		[°C]				
1520011	TEMP	0.000	1.225	10.850		[°C]				
1520011	dTz	0.000	1.225	-15.000		[°C]				
1520012	TEMP	0.000	1.225	10.850		[°C]				
1520012	dTz	0.000	1.225	-15.000		[°C]				
1520013	TEMP	0.000	1.188	10.850		[°C]				
1520013	dTz	0.000	1.188	-15.000		[°C]				
1520014	TEMP	0.000	1.188	10.850		[°C]				
1520014	dTz	0.000	1.188	-15.000		[°C]				
1520015	TEMP	0.000	2.112	10.850		[°C]				
1520015	dTz	0.000	2.112	-15.000		[°C]				
1520016	TEMP	0.000	2.112	10.850		[°C]				
1520016	dTz	0.000	2.112	-15.000		[°C]				
1520017	TEMP	0.000	1.191	10.850		[°C]				
1520017	dTz	0.000	1.191	-15.000		[°C]				
1520018	TEMP	0.000	1.259	10.850		[°C]				
1520018	dTz	0.000	1.259	-15.000		[°C]				
1520019	TEMP	0.000	0.779	10.850		[°C]				
1520019	dTz	0.000	0.779	-15.000		[°C]				
1520020	TEMP	0.000	0.779	10.850		[°C]				
1520020	dTz	0.000	0.779	-15.000		[°C]				
1520021	TEMP	0.000	0.566	10.850		[°C]				
1520021	dTz	0.000	0.566	-15.000		[°C]				
1520022	TEMP	0.000	0.566	10.850		[°C]				
1520022	dTz	0.000	0.566	-15.000		[°C]				
1520023	TEMP	0.000	0.348	10.850		[°C]				
1520023	dTz	0.000	0.348	-15.000		[°C]				
1520024	TEMP	0.000	0.348	10.850		[°C]				
1520024	dTz	0.000	0.348	-15.000		[°C]				
1520025	TEMP	0.000	0.230	10.850		[°C]				
1520025	dTz	0.000	0.230	-15.000		[°C]				
1520026	TEMP	0.000	0.230	10.850		[°C]				
1520026	dTz	0.000	0.230	-15.000		[°C]				
1520027	TEMP	0.000	0.152	10.850		[°C]				

SOFiSTiK AG - www.sofistik.de

Composite bridge 38+50+38, b=14.25m, 2x2HL1100R HISTAR460 , slab 0.30m C30/37
Obc termiczne/thermal loads

Loads acting on Beam-elements

Number	Type	a[m]	l[m]	Loadval	Loadval	Dimens.	ya[m]	za[m]	ye[m]	ze[m]
1520027	dTz	0.000	0.152	-15.000		[°C]				
1520028	TEMP	0.000	0.152	10.850		[°C]				
1520028	dTz	0.000	0.152	-15.000		[°C]				
1520029	TEMP	0.000	1.588	10.850		[°C]				
1520029	dTz	0.000	1.588	-15.000		[°C]				
1520030	TEMP	0.000	1.443	10.850		[°C]				
1520030	dTz	0.000	1.443	-15.000		[°C]				
1520031	TEMP	0.000	1.084	10.850		[°C]				
1520031	dTz	0.000	1.084	-15.000		[°C]				
1520032	TEMP	0.000	1.083	10.850		[°C]				
1520032	dTz	0.000	1.083	-15.000		[°C]				
1520033	TEMP	0.000	0.659	10.850		[°C]				
1520033	dTz	0.000	0.659	-15.000		[°C]				
1520034	TEMP	0.000	0.743	10.850		[°C]				
1520034	dTz	0.000	0.743	-15.000		[°C]				
1530001	TEMP	0.000	0.164	10.850		[°C]				
1530001	dTz	0.000	0.164	-15.000		[°C]				
1530002	TEMP	0.000	0.141	10.850		[°C]				
1530002	dTz	0.000	0.141	-15.000		[°C]				
1530003	TEMP	0.000	0.230	10.850		[°C]				
1530003	dTz	0.000	0.230	-15.000		[°C]				
1530004	TEMP	0.000	0.230	10.850		[°C]				
1530004	dTz	0.000	0.230	-15.000		[°C]				
1530005	TEMP	0.000	0.223	10.850		[°C]				
1530005	dTz	0.000	0.223	-15.000		[°C]				
1530006	TEMP	0.000	0.473	10.850		[°C]				
1530006	dTz	0.000	0.473	-15.000		[°C]				
1530007	TEMP	0.000	0.615	10.850		[°C]				
1530007	dTz	0.000	0.615	-15.000		[°C]				
1530008	TEMP	0.000	0.517	10.850		[°C]				
1530008	dTz	0.000	0.517	-15.000		[°C]				
1530009	TEMP	0.000	0.779	10.850		[°C]				
1530009	dTz	0.000	0.779	-15.000		[°C]				
1530010	TEMP	0.000	0.779	10.850		[°C]				
1530010	dTz	0.000	0.779	-15.000		[°C]				
1530011	TEMP	0.000	1.225	10.850		[°C]				
1530011	dTz	0.000	1.225	-15.000		[°C]				
1530012	TEMP	0.000	1.225	10.850		[°C]				
1530012	dTz	0.000	1.225	-15.000		[°C]				
1530013	TEMP	0.000	0.988	10.850		[°C]				
1530013	dTz	0.000	0.988	-15.000		[°C]				
1530014	TEMP	0.000	1.388	10.850		[°C]				
1530014	dTz	0.000	1.388	-15.000		[°C]				
1530015	TEMP	0.000	1.747	10.850		[°C]				
1530015	dTz	0.000	1.747	-15.000		[°C]				
1530016	TEMP	0.000	2.477	10.850		[°C]				
1530016	dTz	0.000	2.477	-15.000		[°C]				
1530017	TEMP	0.000	0.923	10.850		[°C]				
1530017	dTz	0.000	0.923	-15.000		[°C]				
1530018	TEMP	0.000	0.923	10.850		[°C]				
1530018	dTz	0.000	0.923	-15.000		[°C]				
1530019	TEMP	0.000	0.659	10.850		[°C]				
1530019	dTz	0.000	0.659	-15.000		[°C]				
1530020	TEMP	0.000	0.659	10.850		[°C]				
1530020	dTz	0.000	0.659	-15.000		[°C]				
1530021	TEMP	0.000	0.468	10.850		[°C]				
1530021	dTz	0.000	0.468	-15.000		[°C]				
1530022	TEMP	0.000	0.334	10.850		[°C]				
1530022	dTz	0.000	0.334	-15.000		[°C]				
1530023	TEMP	0.000	0.255	10.850		[°C]				
1530023	dTz	0.000	0.255	-15.000		[°C]				
1530024	TEMP	0.000	0.255	10.850		[°C]				
1530024	dTz	0.000	0.255	-15.000		[°C]				
1530025	TEMP	0.000	0.162	10.850		[°C]				

SOFiSTiK AG - www.sofistik.de

Composite bridge 38+50+38, b=14.25m, 2x2HL1100R HISTAR460 , slab 0.30m C30/37
Obc termiczne/thermal loads

Loads acting on Beam-elements

Number	Type	a[m]	l[m]	Loadval	Loadval	Dimens.	ya[m]	za[m]	ye[m]	ze[m]
1530025	dTz	0.000	0.162	-15.000		[°C]				
1530026	TEMP	0.000	0.162	10.850		[°C]				
1530026	dTz	0.000	0.162	-15.000		[°C]				
1530027	TEMP	0.000	1.478	10.850		[°C]				
1530027	dTz	0.000	1.478	-15.000		[°C]				
1530028	TEMP	0.000	1.478	10.850		[°C]				
1530028	dTz	0.000	1.478	-15.000		[°C]				
1530029	TEMP	0.000	0.922	10.850		[°C]				
1530029	dTz	0.000	0.922	-15.000		[°C]				
1530030	TEMP	0.000	0.922	10.850		[°C]				
1530030	dTz	0.000	0.922	-15.000		[°C]				

Load Case 922 (T_1) TM(15:up.warm)-wTN

Factor forces and moments		1.000	
Factor dead weight	DL-XX	0.000	
Factor dead weight	DL-YY	0.000	
Factor dead weight	DL-ZZ	0.000	
unfavourable safety factor		1.500	
favourable safety factor		0.000	
Combination coefficient ψ-0		0.600	(rare)
Combination coefficient ψ-1'		1.000	(non frequent)
Combination coefficient ψ-1		0.600	(frequent)
Combination coefficient ψ-2		0.500	(permanent)

Loads partially copied from load case 920 with factor 1.000
Loads partially copied from load case 902 with factor 0.350

Loads

Kind	Referenceto	Projection Coordinates W[m]	X[m]	Y[m]	Z[m]	Type	Loadvalue
Area						TEMP	-10.500 [°C]
	QGRP	81			activated		100.00 percent
Area						TEMP	-10.500 [°C]
	QGRP	82			activated		100.00 percent
Area						TEMP	-10.500 [°C]
	QGRP	83			activated		100.00 percent

Loads acting on Beam-elements

Number	Type	a[m]	l[m]	Loadval	Loadval	Dimens.	ya[m]	za[m]	ye[m]	ze[m]
510001	TEMP	0.000	2.375	-10.500		[°C]				
510001	dTz	0.000	2.375	-15.000		[°C]				
510002	TEMP	0.000	2.375	-10.500		[°C]				
510002	dTz	0.000	2.375	-15.000		[°C]				
510003	TEMP	0.000	2.375	-10.500		[°C]				
510003	dTz	0.000	2.375	-15.000		[°C]				
510004	TEMP	0.000	2.375	-10.500		[°C]				
510004	dTz	0.000	2.375	-15.000		[°C]				
510005	TEMP	0.000	1.625	-10.500		[°C]				
510005	dTz	0.000	1.625	-15.000		[°C]				
510006	TEMP	0.000	1.625	-10.500		[°C]				
510006	dTz	0.000	1.625	-15.000		[°C]				
510007	TEMP	0.000	1.642	-10.500		[°C]				
510007	dTz	0.000	1.642	-15.000		[°C]				
510008	TEMP	0.000	1.608	-10.500		[°C]				
510008	dTz	0.000	1.608	-15.000		[°C]				
510009	TEMP	0.000	2.500	-10.500		[°C]				
510009	dTz	0.000	2.500	-15.000		[°C]				
510010	TEMP	0.000	2.500	-10.500		[°C]				
510010	dTz	0.000	2.500	-15.000		[°C]				
510011	TEMP	0.000	2.000	-10.500		[°C]				
510011	dTz	0.000	2.000	-15.000		[°C]				
510012	TEMP	0.000	2.000	-10.500		[°C]				
510012	dTz	0.000	2.000	-15.000		[°C]				
510013	TEMP	0.000	2.000	-10.500		[°C]				
510013	dTz	0.000	2.000	-15.000		[°C]				

SOFiSTiK AG - www.sofistik.de

Composite bridge 38+50+38, b=14.25m, 2x2HL1100R HISTAR460 , slab 0.30m C30/37
Obc termiczne/thermal loads

Loads acting on Beam-elements

Number	Type	a[m]	l[m]	Loadval	Loadval	Dimens.	ya[m]	za[m]	ye[m]	ze[m]
510014	TEMP	0.000	2.000	-10.500		[°C]				
510014	dTz	0.000	2.000	-15.000		[°C]				
510015	TEMP	0.000	2.000	-10.500		[°C]				
510015	dTz	0.000	2.000	-15.000		[°C]				
510016	TEMP	0.000	2.000	-10.500		[°C]				
510016	dTz	0.000	2.000	-15.000		[°C]				
510017	TEMP	0.000	2.172	-10.500		[°C]				
510017	dTz	0.000	2.172	-15.000		[°C]				
510018	TEMP	0.000	1.828	-10.500		[°C]				
510018	dTz	0.000	1.828	-15.000		[°C]				
510019	TEMP	0.000	2.843	-10.500		[°C]				
510019	dTz	0.000	2.843	-15.000		[°C]				
510020	TEMP	0.000	2.157	-10.500		[°C]				
510020	dTz	0.000	2.157	-15.000		[°C]				
510021	TEMP	0.000	1.900	-10.500		[°C]				
510021	dTz	0.000	1.900	-15.000		[°C]				
510022	TEMP	0.000	1.900	-10.500		[°C]				
510022	dTz	0.000	1.900	-15.000		[°C]				
510023	TEMP	0.000	1.900	-10.500		[°C]				
510023	dTz	0.000	1.900	-15.000		[°C]				
510024	TEMP	0.000	1.900	-10.500		[°C]				
510024	dTz	0.000	1.900	-15.000		[°C]				
520001	TEMP	0.000	1.783	-10.500		[°C]				
520001	dTz	0.000	1.783	-15.000		[°C]				
520002	TEMP	0.000	2.383	-10.500		[°C]				
520002	dTz	0.000	2.383	-15.000		[°C]				
520003	TEMP	0.000	2.571	-10.500		[°C]				
520003	dTz	0.000	2.571	-15.000		[°C]				
520004	TEMP	0.000	1.596	-10.500		[°C]				
520004	dTz	0.000	1.596	-15.000		[°C]				
520005	TEMP	0.000	1.883	-10.500		[°C]				
520005	dTz	0.000	1.883	-15.000		[°C]				
520006	TEMP	0.000	2.284	-10.500		[°C]				
520006	dTz	0.000	2.284	-15.000		[°C]				
520007	TEMP	0.000	2.083	-10.500		[°C]				
520007	dTz	0.000	2.083	-15.000		[°C]				
520008	TEMP	0.000	2.083	-10.500		[°C]				
520008	dTz	0.000	2.083	-15.000		[°C]				
520009	TEMP	0.000	2.083	-10.500		[°C]				
520009	dTz	0.000	2.083	-15.000		[°C]				
520010	TEMP	0.000	2.083	-10.500		[°C]				
520010	dTz	0.000	2.083	-15.000		[°C]				
520011	TEMP	0.000	2.083	-10.500		[°C]				
520011	dTz	0.000	2.083	-15.000		[°C]				
520012	TEMP	0.000	2.083	-10.500		[°C]				
520012	dTz	0.000	2.083	-15.000		[°C]				
520013	TEMP	0.000	2.500	-10.500		[°C]				
520013	dTz	0.000	2.500	-15.000		[°C]				
520014	TEMP	0.000	2.500	-10.500		[°C]				
520014	dTz	0.000	2.500	-15.000		[°C]				
520015	TEMP	0.000	1.658	-10.500		[°C]				
520015	dTz	0.000	1.658	-15.000		[°C]				
520016	TEMP	0.000	2.509	-10.500		[°C]				
520016	dTz	0.000	2.509	-15.000		[°C]				
520017	TEMP	0.000	2.554	-10.500		[°C]				
520017	dTz	0.000	2.554	-15.000		[°C]				
520018	TEMP	0.000	1.613	-10.500		[°C]				
520018	dTz	0.000	1.613	-15.000		[°C]				
520019	TEMP	0.000	1.892	-10.500		[°C]				
520019	dTz	0.000	1.892	-15.000		[°C]				
520020	TEMP	0.000	2.275	-10.500		[°C]				
520020	dTz	0.000	2.275	-15.000		[°C]				
520021	TEMP	0.000	2.083	-10.500		[°C]				
520021	dTz	0.000	2.083	-15.000		[°C]				

SOFiSTiK AG - www.sofistik.de

Composite bridge 38+50+38, b=14.25m, 2x2HL1100R HISTAR460 , slab 0.30m C30/37
Obc termiczne/thermal loads

Loads acting on Beam-elements

Number	Type	a[m]	l[m]	Loadval	Loadval	Dimens.	ya[m]	za[m]	ye[m]	ze[m]
520022	TEMP	0.000	2.083	-10.500		[°C]				
520022	dTz	0.000	2.083	-15.000		[°C]				
520023	TEMP	0.000	2.083	-10.500		[°C]				
520023	dTz	0.000	2.083	-15.000		[°C]				
520024	TEMP	0.000	2.083	-10.500		[°C]				
520024	dTz	0.000	2.083	-15.000		[°C]				
520025	TEMP	0.000	2.083	-10.500		[°C]				
520025	dTz	0.000	2.083	-15.000		[°C]				
520026	TEMP	0.000	2.083	-10.500		[°C]				
520026	dTz	0.000	2.083	-15.000		[°C]				
520027	TEMP	0.000	2.491	-10.500		[°C]				
520027	dTz	0.000	2.491	-15.000		[°C]				
520028	TEMP	0.000	2.509	-10.500		[°C]				
520028	dTz	0.000	2.509	-15.000		[°C]				
520029	TEMP	0.000	2.500	-10.500		[°C]				
520029	dTz	0.000	2.500	-15.000		[°C]				
520030	TEMP	0.000	2.500	-10.500		[°C]				
520030	dTz	0.000	2.500	-15.000		[°C]				
520031	TEMP	0.000	2.500	-10.500		[°C]				
520031	dTz	0.000	2.500	-15.000		[°C]				
520032	TEMP	0.000	2.500	-10.500		[°C]				
520032	dTz	0.000	2.500	-15.000		[°C]				
530001	TEMP	0.000	1.625	-10.500		[°C]				
530001	dTz	0.000	1.625	-15.000		[°C]				
530002	TEMP	0.000	1.625	-10.500		[°C]				
530002	dTz	0.000	1.625	-15.000		[°C]				
530003	TEMP	0.000	1.625	-10.500		[°C]				
530003	dTz	0.000	1.625	-15.000		[°C]				
530004	TEMP	0.000	1.625	-10.500		[°C]				
530004	dTz	0.000	1.625	-15.000		[°C]				
530005	TEMP	0.000	2.375	-10.500		[°C]				
530005	dTz	0.000	2.375	-15.000		[°C]				
530006	TEMP	0.000	2.375	-10.500		[°C]				
530006	dTz	0.000	2.375	-15.000		[°C]				
530007	TEMP	0.000	2.375	-10.500		[°C]				
530007	dTz	0.000	2.375	-15.000		[°C]				
530008	TEMP	0.000	2.375	-10.500		[°C]				
530008	dTz	0.000	2.375	-15.000		[°C]				
530009	TEMP	0.000	1.900	-10.500		[°C]				
530009	dTz	0.000	1.900	-15.000		[°C]				
530010	TEMP	0.000	1.900	-10.500		[°C]				
530010	dTz	0.000	1.900	-15.000		[°C]				
530011	TEMP	0.000	2.000	-10.500		[°C]				
530011	dTz	0.000	2.000	-15.000		[°C]				
530012	TEMP	0.000	2.000	-10.500		[°C]				
530012	dTz	0.000	2.000	-15.000		[°C]				
530013	TEMP	0.000	2.000	-10.500		[°C]				
530013	dTz	0.000	2.000	-15.000		[°C]				
530014	TEMP	0.000	2.000	-10.500		[°C]				
530014	dTz	0.000	2.000	-15.000		[°C]				
530015	TEMP	0.000	2.000	-10.500		[°C]				
530015	dTz	0.000	2.000	-15.000		[°C]				
530016	TEMP	0.000	2.000	-10.500		[°C]				
530016	dTz	0.000	2.000	-15.000		[°C]				
530017	TEMP	0.000	2.000	-10.500		[°C]				
530017	dTz	0.000	2.000	-15.000		[°C]				
530018	TEMP	0.000	2.000	-10.500		[°C]				
530018	dTz	0.000	2.000	-15.000		[°C]				
530019	TEMP	0.000	1.900	-10.500		[°C]				
530019	dTz	0.000	1.900	-15.000		[°C]				
530020	TEMP	0.000	1.900	-10.500		[°C]				
530020	dTz	0.000	1.900	-15.000		[°C]				
530021	TEMP	0.000	2.500	-10.500		[°C]				
530021	dTz	0.000	2.500	-15.000		[°C]				

SOFiSTiK AG - www.sofistik.de

Composite bridge 38+50+38, b=14.25m, 2x2HL1100R HISTAR460 , slab 0.30m C30/37
Obc termiczne/thermal loads

Loads acting on Beam-elements

Number	Type	a[m]	l[m]	Loadval	Loadval	Dimens.	ya[m]	za[m]	ye[m]	ze[m]
530022	TEMP	0.000	2.500	-10.500		[°C]				
530022	dTz	0.000	2.500	-15.000		[°C]				
530023	TEMP	0.000	2.500	-10.500		[°C]				
530023	dTz	0.000	2.500	-15.000		[°C]				
530024	TEMP	0.000	2.500	-10.500		[°C]				
530024	dTz	0.000	2.500	-15.000		[°C]				
1510001	TEMP	0.000	0.162	-10.500		[°C]				
1510001	dTz	0.000	0.162	-15.000		[°C]				
1510002	TEMP	0.000	0.162	-10.500		[°C]				
1510002	dTz	0.000	0.162	-15.000		[°C]				
1510003	TEMP	0.000	0.255	-10.500		[°C]				
1510003	dTz	0.000	0.255	-15.000		[°C]				
1510004	TEMP	0.000	0.255	-10.500		[°C]				
1510004	dTz	0.000	0.255	-15.000		[°C]				
1510005	TEMP	0.000	0.401	-10.500		[°C]				
1510005	dTz	0.000	0.401	-15.000		[°C]				
1510006	TEMP	0.000	0.401	-10.500		[°C]				
1510006	dTz	0.000	0.401	-15.000		[°C]				
1510007	TEMP	0.000	0.585	-10.500		[°C]				
1510007	dTz	0.000	0.585	-15.000		[°C]				
1510008	TEMP	0.000	0.733	-10.500		[°C]				
1510008	dTz	0.000	0.733	-15.000		[°C]				
1510009	TEMP	0.000	0.923	-10.500		[°C]				
1510009	dTz	0.000	0.923	-15.000		[°C]				
1510010	TEMP	0.000	0.923	-10.500		[°C]				
1510010	dTz	0.000	0.923	-15.000		[°C]				
1510011	TEMP	0.000	0.922	-10.500		[°C]				
1510011	dTz	0.000	0.922	-15.000		[°C]				
1510012	TEMP	0.000	0.922	-10.500		[°C]				
1510012	dTz	0.000	0.922	-15.000		[°C]				
1510013	TEMP	0.000	1.142	-10.500		[°C]				
1510013	dTz	0.000	1.142	-15.000		[°C]				
1510014	TEMP	0.000	1.815	-10.500		[°C]				
1510014	dTz	0.000	1.815	-15.000		[°C]				
1510015	TEMP	0.000	1.155	-10.500		[°C]				
1510015	dTz	0.000	1.155	-15.000		[°C]				
1510016	TEMP	0.000	1.294	-10.500		[°C]				
1510016	dTz	0.000	1.294	-15.000		[°C]				
1510017	TEMP	0.000	0.779	-10.500		[°C]				
1510017	dTz	0.000	0.779	-15.000		[°C]				
1510018	TEMP	0.000	0.779	-10.500		[°C]				
1510018	dTz	0.000	0.779	-15.000		[°C]				
1510019	TEMP	0.000	0.566	-10.500		[°C]				
1510019	dTz	0.000	0.566	-15.000		[°C]				
1510020	TEMP	0.000	0.566	-10.500		[°C]				
1510020	dTz	0.000	0.566	-15.000		[°C]				
1510021	TEMP	0.000	0.348	-10.500		[°C]				
1510021	dTz	0.000	0.348	-15.000		[°C]				
1510022	TEMP	0.000	0.348	-10.500		[°C]				
1510022	dTz	0.000	0.348	-15.000		[°C]				
1510023	TEMP	0.000	0.230	-10.500		[°C]				
1510023	dTz	0.000	0.230	-15.000		[°C]				
1510024	TEMP	0.000	0.230	-10.500		[°C]				
1510024	dTz	0.000	0.230	-15.000		[°C]				
1510025	TEMP	0.000	0.152	-10.500		[°C]				
1510025	dTz	0.000	0.152	-15.000		[°C]				
1510026	TEMP	0.000	0.152	-10.500		[°C]				
1510026	dTz	0.000	0.152	-15.000		[°C]				
1510027	TEMP	0.000	1.515	-10.500		[°C]				
1510027	dTz	0.000	1.515	-15.000		[°C]				
1510028	TEMP	0.000	1.515	-10.500		[°C]				
1510028	dTz	0.000	1.515	-15.000		[°C]				
1510029	TEMP	0.000	1.083	-10.500		[°C]				
1510029	dTz	0.000	1.083	-15.000		[°C]				

SOFiSTiK AG - www.sofistik.de

Composite bridge 38+50+38, b=14.25m, 2x2HL1100R HISTAR460 , slab 0.30m C30/37
Obc termiczne/thermal loads

Loads acting on Beam-elements

Number	Type	a[m]	l[m]	Loadval	Loadval	Dimens.	ya[m]	za[m]	ye[m]	ze[m]
1510030	TEMP	0.000	1.084	-10.500		[°C]				
1510030	dTz	0.000	1.084	-15.000		[°C]				
1510031	TEMP	0.000	0.701	-10.500		[°C]				
1510031	dTz	0.000	0.701	-15.000		[°C]				
1510032	TEMP	0.000	0.701	-10.500		[°C]				
1510032	dTz	0.000	0.701	-15.000		[°C]				
1520001	TEMP	0.000	0.152	-10.500		[°C]				
1520001	dTz	0.000	0.152	-15.000		[°C]				
1520002	TEMP	0.000	0.152	-10.500		[°C]				
1520002	dTz	0.000	0.152	-15.000		[°C]				
1520003	TEMP	0.000	0.230	-10.500		[°C]				
1520003	dTz	0.000	0.230	-15.000		[°C]				
1520004	TEMP	0.000	0.230	-10.500		[°C]				
1520004	dTz	0.000	0.230	-15.000		[°C]				
1520005	TEMP	0.000	0.348	-10.500		[°C]				
1520005	dTz	0.000	0.348	-15.000		[°C]				
1520006	TEMP	0.000	0.348	-10.500		[°C]				
1520006	dTz	0.000	0.348	-15.000		[°C]				
1520007	TEMP	0.000	0.566	-10.500		[°C]				
1520007	dTz	0.000	0.566	-15.000		[°C]				
1520008	TEMP	0.000	0.566	-10.500		[°C]				
1520008	dTz	0.000	0.566	-15.000		[°C]				
1520009	TEMP	0.000	0.779	-10.500		[°C]				
1520009	dTz	0.000	0.779	-15.000		[°C]				
1520010	TEMP	0.000	0.779	-10.500		[°C]				
1520010	dTz	0.000	0.779	-15.000		[°C]				
1520011	TEMP	0.000	1.225	-10.500		[°C]				
1520011	dTz	0.000	1.225	-15.000		[°C]				
1520012	TEMP	0.000	1.225	-10.500		[°C]				
1520012	dTz	0.000	1.225	-15.000		[°C]				
1520013	TEMP	0.000	1.188	-10.500		[°C]				
1520013	dTz	0.000	1.188	-15.000		[°C]				
1520014	TEMP	0.000	1.188	-10.500		[°C]				
1520014	dTz	0.000	1.188	-15.000		[°C]				
1520015	TEMP	0.000	2.112	-10.500		[°C]				
1520015	dTz	0.000	2.112	-15.000		[°C]				
1520016	TEMP	0.000	2.112	-10.500		[°C]				
1520016	dTz	0.000	2.112	-15.000		[°C]				
1520017	TEMP	0.000	1.191	-10.500		[°C]				
1520017	dTz	0.000	1.191	-15.000		[°C]				
1520018	TEMP	0.000	1.259	-10.500		[°C]				
1520018	dTz	0.000	1.259	-15.000		[°C]				
1520019	TEMP	0.000	0.779	-10.500		[°C]				
1520019	dTz	0.000	0.779	-15.000		[°C]				
1520020	TEMP	0.000	0.779	-10.500		[°C]				
1520020	dTz	0.000	0.779	-15.000		[°C]				
1520021	TEMP	0.000	0.566	-10.500		[°C]				
1520021	dTz	0.000	0.566	-15.000		[°C]				
1520022	TEMP	0.000	0.566	-10.500		[°C]				
1520022	dTz	0.000	0.566	-15.000		[°C]				
1520023	TEMP	0.000	0.348	-10.500		[°C]				
1520023	dTz	0.000	0.348	-15.000		[°C]				
1520024	TEMP	0.000	0.348	-10.500		[°C]				
1520024	dTz	0.000	0.348	-15.000		[°C]				
1520025	TEMP	0.000	0.230	-10.500		[°C]				
1520025	dTz	0.000	0.230	-15.000		[°C]				
1520026	TEMP	0.000	0.230	-10.500		[°C]				
1520026	dTz	0.000	0.230	-15.000		[°C]				
1520027	TEMP	0.000	0.152	-10.500		[°C]				
1520027	dTz	0.000	0.152	-15.000		[°C]				
1520028	TEMP	0.000	0.152	-10.500		[°C]				
1520028	dTz	0.000	0.152	-15.000		[°C]				
1520029	TEMP	0.000	1.588	-10.500		[°C]				
1520029	dTz	0.000	1.588	-15.000		[°C]				

SOFiSTiK AG - www.sofistik.de

Composite bridge 38+50+38, b=14.25m, 2x2HL1100R HISTAR460 , slab 0.30m C30/37
Obc termiczne/thermal loads

Loads acting on Beam-elements

Number	Type	a[m]	l[m]	Loadval	Loadval	Dimens.	ya[m]	za[m]	ye[m]	ze[m]
1520030	TEMP	0.000	1.443	-10.500		[°C]				
1520030	dTz	0.000	1.443	-15.000		[°C]				
1520031	TEMP	0.000	1.084	-10.500		[°C]				
1520031	dTz	0.000	1.084	-15.000		[°C]				
1520032	TEMP	0.000	1.083	-10.500		[°C]				
1520032	dTz	0.000	1.083	-15.000		[°C]				
1520033	TEMP	0.000	0.659	-10.500		[°C]				
1520033	dTz	0.000	0.659	-15.000		[°C]				
1520034	TEMP	0.000	0.743	-10.500		[°C]				
1520034	dTz	0.000	0.743	-15.000		[°C]				
1530001	TEMP	0.000	0.164	-10.500		[°C]				
1530001	dTz	0.000	0.164	-15.000		[°C]				
1530002	TEMP	0.000	0.141	-10.500		[°C]				
1530002	dTz	0.000	0.141	-15.000		[°C]				
1530003	TEMP	0.000	0.230	-10.500		[°C]				
1530003	dTz	0.000	0.230	-15.000		[°C]				
1530004	TEMP	0.000	0.230	-10.500		[°C]				
1530004	dTz	0.000	0.230	-15.000		[°C]				
1530005	TEMP	0.000	0.223	-10.500		[°C]				
1530005	dTz	0.000	0.223	-15.000		[°C]				
1530006	TEMP	0.000	0.473	-10.500		[°C]				
1530006	dTz	0.000	0.473	-15.000		[°C]				
1530007	TEMP	0.000	0.615	-10.500		[°C]				
1530007	dTz	0.000	0.615	-15.000		[°C]				
1530008	TEMP	0.000	0.517	-10.500		[°C]				
1530008	dTz	0.000	0.517	-15.000		[°C]				
1530009	TEMP	0.000	0.779	-10.500		[°C]				
1530009	dTz	0.000	0.779	-15.000		[°C]				
1530010	TEMP	0.000	0.779	-10.500		[°C]				
1530010	dTz	0.000	0.779	-15.000		[°C]				
1530011	TEMP	0.000	1.225	-10.500		[°C]				
1530011	dTz	0.000	1.225	-15.000		[°C]				
1530012	TEMP	0.000	1.225	-10.500		[°C]				
1530012	dTz	0.000	1.225	-15.000		[°C]				
1530013	TEMP	0.000	0.988	-10.500		[°C]				
1530013	dTz	0.000	0.988	-15.000		[°C]				
1530014	TEMP	0.000	1.388	-10.500		[°C]				
1530014	dTz	0.000	1.388	-15.000		[°C]				
1530015	TEMP	0.000	1.747	-10.500		[°C]				
1530015	dTz	0.000	1.747	-15.000		[°C]				
1530016	TEMP	0.000	2.477	-10.500		[°C]				
1530016	dTz	0.000	2.477	-15.000		[°C]				
1530017	TEMP	0.000	0.923	-10.500		[°C]				
1530017	dTz	0.000	0.923	-15.000		[°C]				
1530018	TEMP	0.000	0.923	-10.500		[°C]				
1530018	dTz	0.000	0.923	-15.000		[°C]				
1530019	TEMP	0.000	0.659	-10.500		[°C]				
1530019	dTz	0.000	0.659	-15.000		[°C]				
1530020	TEMP	0.000	0.659	-10.500		[°C]				
1530020	dTz	0.000	0.659	-15.000		[°C]				
1530021	TEMP	0.000	0.468	-10.500		[°C]				
1530021	dTz	0.000	0.468	-15.000		[°C]				
1530022	TEMP	0.000	0.334	-10.500		[°C]				
1530022	dTz	0.000	0.334	-15.000		[°C]				
1530023	TEMP	0.000	0.255	-10.500		[°C]				
1530023	dTz	0.000	0.255	-15.000		[°C]				
1530024	TEMP	0.000	0.255	-10.500		[°C]				
1530024	dTz	0.000	0.255	-15.000		[°C]				
1530025	TEMP	0.000	0.162	-10.500		[°C]				
1530025	dTz	0.000	0.162	-15.000		[°C]				
1530026	TEMP	0.000	0.162	-10.500		[°C]				
1530026	dTz	0.000	0.162	-15.000		[°C]				
1530027	TEMP	0.000	1.478	-10.500		[°C]				
1530027	dTz	0.000	1.478	-15.000		[°C]				

SOFiSTiK AG - www.sofistik.de

Composite bridge 38+50+38, b=14.25m, 2x2HL1100R HISTAR460 , slab 0.30m C30/37
Obc termiczne/thermal loads

Loads acting on Beam-elements

Number	Type	a[m]	l[m]	Loadval	Loadval	Dimens.	ya[m]	za[m]	ye[m]	ze[m]
1530028	TEMP	0.000	1.478	-10.500		[°C]				
1530028	dTz	0.000	1.478	-15.000		[°C]				
1530029	TEMP	0.000	0.922	-10.500		[°C]				
1530029	dTz	0.000	0.922	-15.000		[°C]				
1530030	TEMP	0.000	0.922	-10.500		[°C]				
1530030	dTz	0.000	0.922	-15.000		[°C]				

Load Case 923 (T_1) wTM(15:up.warm)+TN

Factor forces and moments		1.000	
Factor dead weight	DL-XX	0.000	
Factor dead weight	DL-YY	0.000	
Factor dead weight	DL-ZZ	0.000	
unfavourable safety factor		1.500	
favourable safety factor		0.000	
Combination coefficient ψ-0		0.600	(rare)
Combination coefficient ψ-1'		1.000	(non frequent)
Combination coefficient ψ-1		0.600	(frequent)
Combination coefficient ψ-2		0.500	(permanent)

Loads partially copied from load case 920 with factor 0.750
Loads partially copied from load case 901 with factor 1.000

Loads

Kind	Referenceto	Projection Coordinates W[m]	X[m]	Y[m]	Z[m]	Type	Loadvalue
Area						TEMP	31.000 [°C]
	QGRP	81			activated		100.00 percent
Area						TEMP	31.000 [°C]
	QGRP	82			activated		100.00 percent
Area						TEMP	31.000 [°C]
	QGRP	83			activated		100.00 percent

Loads acting on Beam-elements

Number	Type	a[m]	l[m]	Loadval	Loadval	Dimens.	ya[m]	za[m]	ye[m]	ze[m]
510001	TEMP	0.000	2.375	31.000		[°C]				
510001	dTz	0.000	2.375	-11.250		[°C]				
510002	TEMP	0.000	2.375	31.000		[°C]				
510002	dTz	0.000	2.375	-11.250		[°C]				
510003	TEMP	0.000	2.375	31.000		[°C]				
510003	dTz	0.000	2.375	-11.250		[°C]				
510004	TEMP	0.000	2.375	31.000		[°C]				
510004	dTz	0.000	2.375	-11.250		[°C]				
510005	TEMP	0.000	1.625	31.000		[°C]				
510005	dTz	0.000	1.625	-11.250		[°C]				
510006	TEMP	0.000	1.625	31.000		[°C]				
510006	dTz	0.000	1.625	-11.250		[°C]				
510007	TEMP	0.000	1.642	31.000		[°C]				
510007	dTz	0.000	1.642	-11.250		[°C]				
510008	TEMP	0.000	1.608	31.000		[°C]				
510008	dTz	0.000	1.608	-11.250		[°C]				
510009	TEMP	0.000	2.500	31.000		[°C]				
510009	dTz	0.000	2.500	-11.250		[°C]				
510010	TEMP	0.000	2.500	31.000		[°C]				
510010	dTz	0.000	2.500	-11.250		[°C]				
510011	TEMP	0.000	2.000	31.000		[°C]				
510011	dTz	0.000	2.000	-11.250		[°C]				
510012	TEMP	0.000	2.000	31.000		[°C]				
510012	dTz	0.000	2.000	-11.250		[°C]				
510013	TEMP	0.000	2.000	31.000		[°C]				
510013	dTz	0.000	2.000	-11.250		[°C]				
510014	TEMP	0.000	2.000	31.000		[°C]				
510014	dTz	0.000	2.000	-11.250		[°C]				
510015	TEMP	0.000	2.000	31.000		[°C]				
510015	dTz	0.000	2.000	-11.250		[°C]				
510016	TEMP	0.000	2.000	31.000		[°C]				

SOFiSTiK AG - www.sofistik.de

Composite bridge 38+50+38, b=14.25m, 2x2HL1100R HISTAR460 , slab 0.30m C30/37
Obc termiczne/thermal loads

Loads acting on Beam-elements

Number	Type	a[m]	l[m]	Loadval	Loadval	Dimens.	ya[m]	za[m]	ye[m]	ze[m]
510016	dTz	0.000	2.000	-11.250		[°C]				
510017	TEMP	0.000	2.172	31.000		[°C]				
510017	dTz	0.000	2.172	-11.250		[°C]				
510018	TEMP	0.000	1.828	31.000		[°C]				
510018	dTz	0.000	1.828	-11.250		[°C]				
510019	TEMP	0.000	2.843	31.000		[°C]				
510019	dTz	0.000	2.843	-11.250		[°C]				
510020	TEMP	0.000	2.157	31.000		[°C]				
510020	dTz	0.000	2.157	-11.250		[°C]				
510021	TEMP	0.000	1.900	31.000		[°C]				
510021	dTz	0.000	1.900	-11.250		[°C]				
510022	TEMP	0.000	1.900	31.000		[°C]				
510022	dTz	0.000	1.900	-11.250		[°C]				
510023	TEMP	0.000	1.900	31.000		[°C]				
510023	dTz	0.000	1.900	-11.250		[°C]				
510024	TEMP	0.000	1.900	31.000		[°C]				
510024	dTz	0.000	1.900	-11.250		[°C]				
520001	TEMP	0.000	1.783	31.000		[°C]				
520001	dTz	0.000	1.783	-11.250		[°C]				
520002	TEMP	0.000	2.383	31.000		[°C]				
520002	dTz	0.000	2.383	-11.250		[°C]				
520003	TEMP	0.000	2.571	31.000		[°C]				
520003	dTz	0.000	2.571	-11.250		[°C]				
520004	TEMP	0.000	1.596	31.000		[°C]				
520004	dTz	0.000	1.596	-11.250		[°C]				
520005	TEMP	0.000	1.883	31.000		[°C]				
520005	dTz	0.000	1.883	-11.250		[°C]				
520006	TEMP	0.000	2.284	31.000		[°C]				
520006	dTz	0.000	2.284	-11.250		[°C]				
520007	TEMP	0.000	2.083	31.000		[°C]				
520007	dTz	0.000	2.083	-11.250		[°C]				
520008	TEMP	0.000	2.083	31.000		[°C]				
520008	dTz	0.000	2.083	-11.250		[°C]				
520009	TEMP	0.000	2.083	31.000		[°C]				
520009	dTz	0.000	2.083	-11.250		[°C]				
520010	TEMP	0.000	2.083	31.000		[°C]				
520010	dTz	0.000	2.083	-11.250		[°C]				
520011	TEMP	0.000	2.083	31.000		[°C]				
520011	dTz	0.000	2.083	-11.250		[°C]				
520012	TEMP	0.000	2.083	31.000		[°C]				
520012	dTz	0.000	2.083	-11.250		[°C]				
520013	TEMP	0.000	2.500	31.000		[°C]				
520013	dTz	0.000	2.500	-11.250		[°C]				
520014	TEMP	0.000	2.500	31.000		[°C]				
520014	dTz	0.000	2.500	-11.250		[°C]				
520015	TEMP	0.000	1.658	31.000		[°C]				
520015	dTz	0.000	1.658	-11.250		[°C]				
520016	TEMP	0.000	2.509	31.000		[°C]				
520016	dTz	0.000	2.509	-11.250		[°C]				
520017	TEMP	0.000	2.554	31.000		[°C]				
520017	dTz	0.000	2.554	-11.250		[°C]				
520018	TEMP	0.000	1.613	31.000		[°C]				
520018	dTz	0.000	1.613	-11.250		[°C]				
520019	TEMP	0.000	1.892	31.000		[°C]				
520019	dTz	0.000	1.892	-11.250		[°C]				
520020	TEMP	0.000	2.275	31.000		[°C]				
520020	dTz	0.000	2.275	-11.250		[°C]				
520021	TEMP	0.000	2.083	31.000		[°C]				
520021	dTz	0.000	2.083	-11.250		[°C]				
520022	TEMP	0.000	2.083	31.000		[°C]				
520022	dTz	0.000	2.083	-11.250		[°C]				
520023	TEMP	0.000	2.083	31.000		[°C]				
520023	dTz	0.000	2.083	-11.250		[°C]				
520024	TEMP	0.000	2.083	31.000		[°C]				

SOFiSTiK AG - www.sofistik.de

Composite bridge 38+50+38, b=14.25m, 2x2HL1100R HISTAR460 , slab 0.30m C30/37
Obc termiczne/thermal loads

Loads acting on Beam-elements

Number	Type	a[m]	l[m]	Loadval	Loadval	Dimens.	ya[m]	za[m]	ye[m]	ze[m]
520024	dTz	0.000	2.083	-11.250		[°C]				
520025	TEMP	0.000	2.083	31.000		[°C]				
520025	dTz	0.000	2.083	-11.250		[°C]				
520026	TEMP	0.000	2.083	31.000		[°C]				
520026	dTz	0.000	2.083	-11.250		[°C]				
520027	TEMP	0.000	2.491	31.000		[°C]				
520027	dTz	0.000	2.491	-11.250		[°C]				
520028	TEMP	0.000	2.509	31.000		[°C]				
520028	dTz	0.000	2.509	-11.250		[°C]				
520029	TEMP	0.000	2.500	31.000		[°C]				
520029	dTz	0.000	2.500	-11.250		[°C]				
520030	TEMP	0.000	2.500	31.000		[°C]				
520030	dTz	0.000	2.500	-11.250		[°C]				
520031	TEMP	0.000	2.500	31.000		[°C]				
520031	dTz	0.000	2.500	-11.250		[°C]				
520032	TEMP	0.000	2.500	31.000		[°C]				
520032	dTz	0.000	2.500	-11.250		[°C]				
530001	TEMP	0.000	1.625	31.000		[°C]				
530001	dTz	0.000	1.625	-11.250		[°C]				
530002	TEMP	0.000	1.625	31.000		[°C]				
530002	dTz	0.000	1.625	-11.250		[°C]				
530003	TEMP	0.000	1.625	31.000		[°C]				
530003	dTz	0.000	1.625	-11.250		[°C]				
530004	TEMP	0.000	1.625	31.000		[°C]				
530004	dTz	0.000	1.625	-11.250		[°C]				
530005	TEMP	0.000	2.375	31.000		[°C]				
530005	dTz	0.000	2.375	-11.250		[°C]				
530006	TEMP	0.000	2.375	31.000		[°C]				
530006	dTz	0.000	2.375	-11.250		[°C]				
530007	TEMP	0.000	2.375	31.000		[°C]				
530007	dTz	0.000	2.375	-11.250		[°C]				
530008	TEMP	0.000	2.375	31.000		[°C]				
530008	dTz	0.000	2.375	-11.250		[°C]				
530009	TEMP	0.000	1.900	31.000		[°C]				
530009	dTz	0.000	1.900	-11.250		[°C]				
530010	TEMP	0.000	1.900	31.000		[°C]				
530010	dTz	0.000	1.900	-11.250		[°C]				
530011	TEMP	0.000	2.000	31.000		[°C]				
530011	dTz	0.000	2.000	-11.250		[°C]				
530012	TEMP	0.000	2.000	31.000		[°C]				
530012	dTz	0.000	2.000	-11.250		[°C]				
530013	TEMP	0.000	2.000	31.000		[°C]				
530013	dTz	0.000	2.000	-11.250		[°C]				
530014	TEMP	0.000	2.000	31.000		[°C]				
530014	dTz	0.000	2.000	-11.250		[°C]				
530015	TEMP	0.000	2.000	31.000		[°C]				
530015	dTz	0.000	2.000	-11.250		[°C]				
530016	TEMP	0.000	2.000	31.000		[°C]				
530016	dTz	0.000	2.000	-11.250		[°C]				
530017	TEMP	0.000	2.000	31.000		[°C]				
530017	dTz	0.000	2.000	-11.250		[°C]				
530018	TEMP	0.000	2.000	31.000		[°C]				
530018	dTz	0.000	2.000	-11.250		[°C]				
530019	TEMP	0.000	1.900	31.000		[°C]				
530019	dTz	0.000	1.900	-11.250		[°C]				
530020	TEMP	0.000	1.900	31.000		[°C]				
530020	dTz	0.000	1.900	-11.250		[°C]				
530021	TEMP	0.000	2.500	31.000		[°C]				
530021	dTz	0.000	2.500	-11.250		[°C]				
530022	TEMP	0.000	2.500	31.000		[°C]				
530022	dTz	0.000	2.500	-11.250		[°C]				
530023	TEMP	0.000	2.500	31.000		[°C]				
530023	dTz	0.000	2.500	-11.250		[°C]				
530024	TEMP	0.000	2.500	31.000		[°C]				

SOFiSTiK AG - www.sofistik.de

Composite bridge 38+50+38, b=14.25m, 2x2HL1100R HISTAR460 , slab 0.30m C30/37
Obc termiczne/thermal loads

Loads acting on Beam-elements

Number	Type	a[m]	l[m]	Loadval	Loadval	Dimens.	ya[m]	za[m]	ye[m]	ze[m]
530024	dTz	0.000	2.500	-11.250		[°C]				
1510001	TEMP	0.000	0.162	31.000		[°C]				
1510001	dTz	0.000	0.162	-11.250		[°C]				
1510002	TEMP	0.000	0.162	31.000		[°C]				
1510002	dTz	0.000	0.162	-11.250		[°C]				
1510003	TEMP	0.000	0.255	31.000		[°C]				
1510003	dTz	0.000	0.255	-11.250		[°C]				
1510004	TEMP	0.000	0.255	31.000		[°C]				
1510004	dTz	0.000	0.255	-11.250		[°C]				
1510005	TEMP	0.000	0.401	31.000		[°C]				
1510005	dTz	0.000	0.401	-11.250		[°C]				
1510006	TEMP	0.000	0.401	31.000		[°C]				
1510006	dTz	0.000	0.401	-11.250		[°C]				
1510007	TEMP	0.000	0.585	31.000		[°C]				
1510007	dTz	0.000	0.585	-11.250		[°C]				
1510008	TEMP	0.000	0.733	31.000		[°C]				
1510008	dTz	0.000	0.733	-11.250		[°C]				
1510009	TEMP	0.000	0.923	31.000		[°C]				
1510009	dTz	0.000	0.923	-11.250		[°C]				
1510010	TEMP	0.000	0.923	31.000		[°C]				
1510010	dTz	0.000	0.923	-11.250		[°C]				
1510011	TEMP	0.000	0.922	31.000		[°C]				
1510011	dTz	0.000	0.922	-11.250		[°C]				
1510012	TEMP	0.000	0.922	31.000		[°C]				
1510012	dTz	0.000	0.922	-11.250		[°C]				
1510013	TEMP	0.000	1.142	31.000		[°C]				
1510013	dTz	0.000	1.142	-11.250		[°C]				
1510014	TEMP	0.000	1.815	31.000		[°C]				
1510014	dTz	0.000	1.815	-11.250		[°C]				
1510015	TEMP	0.000	1.155	31.000		[°C]				
1510015	dTz	0.000	1.155	-11.250		[°C]				
1510016	TEMP	0.000	1.294	31.000		[°C]				
1510016	dTz	0.000	1.294	-11.250		[°C]				
1510017	TEMP	0.000	0.779	31.000		[°C]				
1510017	dTz	0.000	0.779	-11.250		[°C]				
1510018	TEMP	0.000	0.779	31.000		[°C]				
1510018	dTz	0.000	0.779	-11.250		[°C]				
1510019	TEMP	0.000	0.566	31.000		[°C]				
1510019	dTz	0.000	0.566	-11.250		[°C]				
1510020	TEMP	0.000	0.566	31.000		[°C]				
1510020	dTz	0.000	0.566	-11.250		[°C]				
1510021	TEMP	0.000	0.348	31.000		[°C]				
1510021	dTz	0.000	0.348	-11.250		[°C]				
1510022	TEMP	0.000	0.348	31.000		[°C]				
1510022	dTz	0.000	0.348	-11.250		[°C]				
1510023	TEMP	0.000	0.230	31.000		[°C]				
1510023	dTz	0.000	0.230	-11.250		[°C]				
1510024	TEMP	0.000	0.230	31.000		[°C]				
1510024	dTz	0.000	0.230	-11.250		[°C]				
1510025	TEMP	0.000	0.152	31.000		[°C]				
1510025	dTz	0.000	0.152	-11.250		[°C]				
1510026	TEMP	0.000	0.152	31.000		[°C]				
1510026	dTz	0.000	0.152	-11.250		[°C]				
1510027	TEMP	0.000	1.515	31.000		[°C]				
1510027	dTz	0.000	1.515	-11.250		[°C]				
1510028	TEMP	0.000	1.515	31.000		[°C]				
1510028	dTz	0.000	1.515	-11.250		[°C]				
1510029	TEMP	0.000	1.083	31.000		[°C]				
1510029	dTz	0.000	1.083	-11.250		[°C]				
1510030	TEMP	0.000	1.084	31.000		[°C]				
1510030	dTz	0.000	1.084	-11.250		[°C]				
1510031	TEMP	0.000	0.701	31.000		[°C]				
1510031	dTz	0.000	0.701	-11.250		[°C]				
1510032	TEMP	0.000	0.701	31.000		[°C]				

SOFiSTiK AG - www.sofistik.de

Composite bridge 38+50+38, b=14.25m, 2x2HL1100R HISTAR460 , slab 0.30m C30/37
Obc termiczne/thermal loads

Loads acting on Beam-elements

Number	Type	a[m]	l[m]	Loadval	Loadval	Dimens.	ya[m]	za[m]	ye[m]	ze[m]
1510032	dTz	0.000	0.701	-11.250		[°C]				
1520001	TEMP	0.000	0.152	31.000		[°C]				
1520001	dTz	0.000	0.152	-11.250		[°C]				
1520002	TEMP	0.000	0.152	31.000		[°C]				
1520002	dTz	0.000	0.152	-11.250		[°C]				
1520003	TEMP	0.000	0.230	31.000		[°C]				
1520003	dTz	0.000	0.230	-11.250		[°C]				
1520004	TEMP	0.000	0.230	31.000		[°C]				
1520004	dTz	0.000	0.230	-11.250		[°C]				
1520005	TEMP	0.000	0.348	31.000		[°C]				
1520005	dTz	0.000	0.348	-11.250		[°C]				
1520006	TEMP	0.000	0.348	31.000		[°C]				
1520006	dTz	0.000	0.348	-11.250		[°C]				
1520007	TEMP	0.000	0.566	31.000		[°C]				
1520007	dTz	0.000	0.566	-11.250		[°C]				
1520008	TEMP	0.000	0.566	31.000		[°C]				
1520008	dTz	0.000	0.566	-11.250		[°C]				
1520009	TEMP	0.000	0.779	31.000		[°C]				
1520009	dTz	0.000	0.779	-11.250		[°C]				
1520010	TEMP	0.000	0.779	31.000		[°C]				
1520010	dTz	0.000	0.779	-11.250		[°C]				
1520011	TEMP	0.000	1.225	31.000		[°C]				
1520011	dTz	0.000	1.225	-11.250		[°C]				
1520012	TEMP	0.000	1.225	31.000		[°C]				
1520012	dTz	0.000	1.225	-11.250		[°C]				
1520013	TEMP	0.000	1.188	31.000		[°C]				
1520013	dTz	0.000	1.188	-11.250		[°C]				
1520014	TEMP	0.000	1.188	31.000		[°C]				
1520014	dTz	0.000	1.188	-11.250		[°C]				
1520015	TEMP	0.000	2.112	31.000		[°C]				
1520015	dTz	0.000	2.112	-11.250		[°C]				
1520016	TEMP	0.000	2.112	31.000		[°C]				
1520016	dTz	0.000	2.112	-11.250		[°C]				
1520017	TEMP	0.000	1.191	31.000		[°C]				
1520017	dTz	0.000	1.191	-11.250		[°C]				
1520018	TEMP	0.000	1.259	31.000		[°C]				
1520018	dTz	0.000	1.259	-11.250		[°C]				
1520019	TEMP	0.000	0.779	31.000		[°C]				
1520019	dTz	0.000	0.779	-11.250		[°C]				
1520020	TEMP	0.000	0.779	31.000		[°C]				
1520020	dTz	0.000	0.779	-11.250		[°C]				
1520021	TEMP	0.000	0.566	31.000		[°C]				
1520021	dTz	0.000	0.566	-11.250		[°C]				
1520022	TEMP	0.000	0.566	31.000		[°C]				
1520022	dTz	0.000	0.566	-11.250		[°C]				
1520023	TEMP	0.000	0.348	31.000		[°C]				
1520023	dTz	0.000	0.348	-11.250		[°C]				
1520024	TEMP	0.000	0.348	31.000		[°C]				
1520024	dTz	0.000	0.348	-11.250		[°C]				
1520025	TEMP	0.000	0.230	31.000		[°C]				
1520025	dTz	0.000	0.230	-11.250		[°C]				
1520026	TEMP	0.000	0.230	31.000		[°C]				
1520026	dTz	0.000	0.230	-11.250		[°C]				
1520027	TEMP	0.000	0.152	31.000		[°C]				
1520027	dTz	0.000	0.152	-11.250		[°C]				
1520028	TEMP	0.000	0.152	31.000		[°C]				
1520028	dTz	0.000	0.152	-11.250		[°C]				
1520029	TEMP	0.000	1.588	31.000		[°C]				
1520029	dTz	0.000	1.588	-11.250		[°C]				
1520030	TEMP	0.000	1.443	31.000		[°C]				
1520030	dTz	0.000	1.443	-11.250		[°C]				
1520031	TEMP	0.000	1.084	31.000		[°C]				
1520031	dTz	0.000	1.084	-11.250		[°C]				
1520032	TEMP	0.000	1.083	31.000		[°C]				

SOFiSTiK AG - www.sofistik.de

Composite bridge 38+50+38, b=14.25m, 2x2HL1100R HISTAR460 , slab 0.30m C30/37
Obc termiczne/thermal loads

Loads acting on Beam-elements

Number	Type	a[m]	l[m]	Loadval	Loadval	Dimens.	ya[m]	za[m]	ye[m]	ze[m]
1520032	dTz	0.000	1.083	-11.250		[°C]				
1520033	TEMP	0.000	0.659	31.000		[°C]				
1520033	dTz	0.000	0.659	-11.250		[°C]				
1520034	TEMP	0.000	0.743	31.000		[°C]				
1520034	dTz	0.000	0.743	-11.250		[°C]				
1530001	TEMP	0.000	0.164	31.000		[°C]				
1530001	dTz	0.000	0.164	-11.250		[°C]				
1530002	TEMP	0.000	0.141	31.000		[°C]				
1530002	dTz	0.000	0.141	-11.250		[°C]				
1530003	TEMP	0.000	0.230	31.000		[°C]				
1530003	dTz	0.000	0.230	-11.250		[°C]				
1530004	TEMP	0.000	0.230	31.000		[°C]				
1530004	dTz	0.000	0.230	-11.250		[°C]				
1530005	TEMP	0.000	0.223	31.000		[°C]				
1530005	dTz	0.000	0.223	-11.250		[°C]				
1530006	TEMP	0.000	0.473	31.000		[°C]				
1530006	dTz	0.000	0.473	-11.250		[°C]				
1530007	TEMP	0.000	0.615	31.000		[°C]				
1530007	dTz	0.000	0.615	-11.250		[°C]				
1530008	TEMP	0.000	0.517	31.000		[°C]				
1530008	dTz	0.000	0.517	-11.250		[°C]				
1530009	TEMP	0.000	0.779	31.000		[°C]				
1530009	dTz	0.000	0.779	-11.250		[°C]				
1530010	TEMP	0.000	0.779	31.000		[°C]				
1530010	dTz	0.000	0.779	-11.250		[°C]				
1530011	TEMP	0.000	1.225	31.000		[°C]				
1530011	dTz	0.000	1.225	-11.250		[°C]				
1530012	TEMP	0.000	1.225	31.000		[°C]				
1530012	dTz	0.000	1.225	-11.250		[°C]				
1530013	TEMP	0.000	0.988	31.000		[°C]				
1530013	dTz	0.000	0.988	-11.250		[°C]				
1530014	TEMP	0.000	1.388	31.000		[°C]				
1530014	dTz	0.000	1.388	-11.250		[°C]				
1530015	TEMP	0.000	1.747	31.000		[°C]				
1530015	dTz	0.000	1.747	-11.250		[°C]				
1530016	TEMP	0.000	2.477	31.000		[°C]				
1530016	dTz	0.000	2.477	-11.250		[°C]				
1530017	TEMP	0.000	0.923	31.000		[°C]				
1530017	dTz	0.000	0.923	-11.250		[°C]				
1530018	TEMP	0.000	0.923	31.000		[°C]				
1530018	dTz	0.000	0.923	-11.250		[°C]				
1530019	TEMP	0.000	0.659	31.000		[°C]				
1530019	dTz	0.000	0.659	-11.250		[°C]				
1530020	TEMP	0.000	0.659	31.000		[°C]				
1530020	dTz	0.000	0.659	-11.250		[°C]				
1530021	TEMP	0.000	0.468	31.000		[°C]				
1530021	dTz	0.000	0.468	-11.250		[°C]				
1530022	TEMP	0.000	0.334	31.000		[°C]				
1530022	dTz	0.000	0.334	-11.250		[°C]				
1530023	TEMP	0.000	0.255	31.000		[°C]				
1530023	dTz	0.000	0.255	-11.250		[°C]				
1530024	TEMP	0.000	0.255	31.000		[°C]				
1530024	dTz	0.000	0.255	-11.250		[°C]				
1530025	TEMP	0.000	0.162	31.000		[°C]				
1530025	dTz	0.000	0.162	-11.250		[°C]				
1530026	TEMP	0.000	0.162	31.000		[°C]				
1530026	dTz	0.000	0.162	-11.250		[°C]				
1530027	TEMP	0.000	1.478	31.000		[°C]				
1530027	dTz	0.000	1.478	-11.250		[°C]				
1530028	TEMP	0.000	1.478	31.000		[°C]				
1530028	dTz	0.000	1.478	-11.250		[°C]				
1530029	TEMP	0.000	0.922	31.000		[°C]				
1530029	dTz	0.000	0.922	-11.250		[°C]				
1530030	TEMP	0.000	0.922	31.000		[°C]				

SOFiSTiK AG - www.sofistik.de

Composite bridge 38+50+38, b=14.25m, 2x2HL1100R HISTAR460 , slab 0.30m C30/37
Obc termiczne/thermal loads

Loads acting on Beam-elements

Number	Type	a[m]	l[m]	Loadval	Loadval Dimens.	ya[m]	za[m]	ye[m]	ze[m]
1530030	dTz	0.000	0.922	-11.250	[°C]				

Load Case 924 (T_1) wTM(15:up.warm)-TN

Factor forces and moments		1.000	
Factor dead weight	DL-XX	0.000	
Factor dead weight	DL-YY	0.000	
Factor dead weight	DL-ZZ	0.000	
unfavourable safety factor		1.500	
favourable safety factor		0.000	
Combination coefficient ψ-0		0.600	(rare)
Combination coefficient ψ-1'		1.000	(non frequent)
Combination coefficient ψ-1		0.600	(frequent)
Combination coefficient ψ-2		0.500	(permanent)

Loads partially copied from load case 920 with factor 0.750
Loads partially copied from load case 902 with factor 1.000

Loads

Kind	Referenceto	Projection Coordinates W[m]	X[m]	Y[m]	Z[m]	Type	Loadvalue
Area						TEMP	-30.000 [°C]
	QGRP	81			activated		100.00 percent
Area						TEMP	-30.000 [°C]
	QGRP	82			activated		100.00 percent
Area						TEMP	-30.000 [°C]
	QGRP	83			activated		100.00 percent

Loads acting on Beam-elements

Number	Type	a[m]	l[m]	Loadval	Loadval Dimens.	ya[m]	za[m]	ye[m]	ze[m]
510001	TEMP	0.000	2.375	-30.000	[°C]				
510001	dTz	0.000	2.375	-11.250	[°C]				
510002	TEMP	0.000	2.375	-30.000	[°C]				
510002	dTz	0.000	2.375	-11.250	[°C]				
510003	TEMP	0.000	2.375	-30.000	[°C]				
510003	dTz	0.000	2.375	-11.250	[°C]				
510004	TEMP	0.000	2.375	-30.000	[°C]				
510004	dTz	0.000	2.375	-11.250	[°C]				
510005	TEMP	0.000	1.625	-30.000	[°C]				
510005	dTz	0.000	1.625	-11.250	[°C]				
510006	TEMP	0.000	1.625	-30.000	[°C]				
510006	dTz	0.000	1.625	-11.250	[°C]				
510007	TEMP	0.000	1.642	-30.000	[°C]				
510007	dTz	0.000	1.642	-11.250	[°C]				
510008	TEMP	0.000	1.608	-30.000	[°C]				
510008	dTz	0.000	1.608	-11.250	[°C]				
510009	TEMP	0.000	2.500	-30.000	[°C]				
510009	dTz	0.000	2.500	-11.250	[°C]				
510010	TEMP	0.000	2.500	-30.000	[°C]				
510010	dTz	0.000	2.500	-11.250	[°C]				
510011	TEMP	0.000	2.000	-30.000	[°C]				
510011	dTz	0.000	2.000	-11.250	[°C]				
510012	TEMP	0.000	2.000	-30.000	[°C]				
510012	dTz	0.000	2.000	-11.250	[°C]				
510013	TEMP	0.000	2.000	-30.000	[°C]				
510013	dTz	0.000	2.000	-11.250	[°C]				
510014	TEMP	0.000	2.000	-30.000	[°C]				
510014	dTz	0.000	2.000	-11.250	[°C]				
510015	TEMP	0.000	2.000	-30.000	[°C]				
510015	dTz	0.000	2.000	-11.250	[°C]				
510016	TEMP	0.000	2.000	-30.000	[°C]				
510016	dTz	0.000	2.000	-11.250	[°C]				
510017	TEMP	0.000	2.172	-30.000	[°C]				
510017	dTz	0.000	2.172	-11.250	[°C]				
510018	TEMP	0.000	1.828	-30.000	[°C]				
510018	dTz	0.000	1.828	-11.250	[°C]				

SOFiSTiK AG - www.sofistik.de

Composite bridge 38+50+38, b=14.25m, 2x2HL1100R HISTAR460 , slab 0.30m C30/37
Obc termiczne/thermal loads

Loads acting on Beam-elements

Number	Type	a[m]	l[m]	Loadval	Loadval	Dimens.	ya[m]	za[m]	ye[m]	ze[m]
510019	TEMP	0.000	2.843	-30.000		[°C]				
510019	dTz	0.000	2.843	-11.250		[°C]				
510020	TEMP	0.000	2.157	-30.000		[°C]				
510020	dTz	0.000	2.157	-11.250		[°C]				
510021	TEMP	0.000	1.900	-30.000		[°C]				
510021	dTz	0.000	1.900	-11.250		[°C]				
510022	TEMP	0.000	1.900	-30.000		[°C]				
510022	dTz	0.000	1.900	-11.250		[°C]				
510023	TEMP	0.000	1.900	-30.000		[°C]				
510023	dTz	0.000	1.900	-11.250		[°C]				
510024	TEMP	0.000	1.900	-30.000		[°C]				
510024	dTz	0.000	1.900	-11.250		[°C]				
520001	TEMP	0.000	1.783	-30.000		[°C]				
520001	dTz	0.000	1.783	-11.250		[°C]				
520002	TEMP	0.000	2.383	-30.000		[°C]				
520002	dTz	0.000	2.383	-11.250		[°C]				
520003	TEMP	0.000	2.571	-30.000		[°C]				
520003	dTz	0.000	2.571	-11.250		[°C]				
520004	TEMP	0.000	1.596	-30.000		[°C]				
520004	dTz	0.000	1.596	-11.250		[°C]				
520005	TEMP	0.000	1.883	-30.000		[°C]				
520005	dTz	0.000	1.883	-11.250		[°C]				
520006	TEMP	0.000	2.284	-30.000		[°C]				
520006	dTz	0.000	2.284	-11.250		[°C]				
520007	TEMP	0.000	2.083	-30.000		[°C]				
520007	dTz	0.000	2.083	-11.250		[°C]				
520008	TEMP	0.000	2.083	-30.000		[°C]				
520008	dTz	0.000	2.083	-11.250		[°C]				
520009	TEMP	0.000	2.083	-30.000		[°C]				
520009	dTz	0.000	2.083	-11.250		[°C]				
520010	TEMP	0.000	2.083	-30.000		[°C]				
520010	dTz	0.000	2.083	-11.250		[°C]				
520011	TEMP	0.000	2.083	-30.000		[°C]				
520011	dTz	0.000	2.083	-11.250		[°C]				
520012	TEMP	0.000	2.083	-30.000		[°C]				
520012	dTz	0.000	2.083	-11.250		[°C]				
520013	TEMP	0.000	2.500	-30.000		[°C]				
520013	dTz	0.000	2.500	-11.250		[°C]				
520014	TEMP	0.000	2.500	-30.000		[°C]				
520014	dTz	0.000	2.500	-11.250		[°C]				
520015	TEMP	0.000	1.658	-30.000		[°C]				
520015	dTz	0.000	1.658	-11.250		[°C]				
520016	TEMP	0.000	2.509	-30.000		[°C]				
520016	dTz	0.000	2.509	-11.250		[°C]				
520017	TEMP	0.000	2.554	-30.000		[°C]				
520017	dTz	0.000	2.554	-11.250		[°C]				
520018	TEMP	0.000	1.613	-30.000		[°C]				
520018	dTz	0.000	1.613	-11.250		[°C]				
520019	TEMP	0.000	1.892	-30.000		[°C]				
520019	dTz	0.000	1.892	-11.250		[°C]				
520020	TEMP	0.000	2.275	-30.000		[°C]				
520020	dTz	0.000	2.275	-11.250		[°C]				
520021	TEMP	0.000	2.083	-30.000		[°C]				
520021	dTz	0.000	2.083	-11.250		[°C]				
520022	TEMP	0.000	2.083	-30.000		[°C]				
520022	dTz	0.000	2.083	-11.250		[°C]				
520023	TEMP	0.000	2.083	-30.000		[°C]				
520023	dTz	0.000	2.083	-11.250		[°C]				
520024	TEMP	0.000	2.083	-30.000		[°C]				
520024	dTz	0.000	2.083	-11.250		[°C]				
520025	TEMP	0.000	2.083	-30.000		[°C]				
520025	dTz	0.000	2.083	-11.250		[°C]				
520026	TEMP	0.000	2.083	-30.000		[°C]				
520026	dTz	0.000	2.083	-11.250		[°C]				

SOFiSTiK AG - www.sofistik.de

Composite bridge 38+50+38, b=14.25m, 2x2HL1100R HISTAR460 , slab 0.30m C30/37
Obc termiczne/thermal loads

Loads acting on Beam-elements

Number	Type	a[m]	l[m]	Loadval	Loadval	Dimens.	ya[m]	za[m]	ye[m]	ze[m]
520027	TEMP	0.000	2.491	-30.000		[°C]				
520027	dTz	0.000	2.491	-11.250		[°C]				
520028	TEMP	0.000	2.509	-30.000		[°C]				
520028	dTz	0.000	2.509	-11.250		[°C]				
520029	TEMP	0.000	2.500	-30.000		[°C]				
520029	dTz	0.000	2.500	-11.250		[°C]				
520030	TEMP	0.000	2.500	-30.000		[°C]				
520030	dTz	0.000	2.500	-11.250		[°C]				
520031	TEMP	0.000	2.500	-30.000		[°C]				
520031	dTz	0.000	2.500	-11.250		[°C]				
520032	TEMP	0.000	2.500	-30.000		[°C]				
520032	dTz	0.000	2.500	-11.250		[°C]				
530001	TEMP	0.000	1.625	-30.000		[°C]				
530001	dTz	0.000	1.625	-11.250		[°C]				
530002	TEMP	0.000	1.625	-30.000		[°C]				
530002	dTz	0.000	1.625	-11.250		[°C]				
530003	TEMP	0.000	1.625	-30.000		[°C]				
530003	dTz	0.000	1.625	-11.250		[°C]				
530004	TEMP	0.000	1.625	-30.000		[°C]				
530004	dTz	0.000	1.625	-11.250		[°C]				
530005	TEMP	0.000	2.375	-30.000		[°C]				
530005	dTz	0.000	2.375	-11.250		[°C]				
530006	TEMP	0.000	2.375	-30.000		[°C]				
530006	dTz	0.000	2.375	-11.250		[°C]				
530007	TEMP	0.000	2.375	-30.000		[°C]				
530007	dTz	0.000	2.375	-11.250		[°C]				
530008	TEMP	0.000	2.375	-30.000		[°C]				
530008	dTz	0.000	2.375	-11.250		[°C]				
530009	TEMP	0.000	1.900	-30.000		[°C]				
530009	dTz	0.000	1.900	-11.250		[°C]				
530010	TEMP	0.000	1.900	-30.000		[°C]				
530010	dTz	0.000	1.900	-11.250		[°C]				
530011	TEMP	0.000	2.000	-30.000		[°C]				
530011	dTz	0.000	2.000	-11.250		[°C]				
530012	TEMP	0.000	2.000	-30.000		[°C]				
530012	dTz	0.000	2.000	-11.250		[°C]				
530013	TEMP	0.000	2.000	-30.000		[°C]				
530013	dTz	0.000	2.000	-11.250		[°C]				
530014	TEMP	0.000	2.000	-30.000		[°C]				
530014	dTz	0.000	2.000	-11.250		[°C]				
530015	TEMP	0.000	2.000	-30.000		[°C]				
530015	dTz	0.000	2.000	-11.250		[°C]				
530016	TEMP	0.000	2.000	-30.000		[°C]				
530016	dTz	0.000	2.000	-11.250		[°C]				
530017	TEMP	0.000	2.000	-30.000		[°C]				
530017	dTz	0.000	2.000	-11.250		[°C]				
530018	TEMP	0.000	2.000	-30.000		[°C]				
530018	dTz	0.000	2.000	-11.250		[°C]				
530019	TEMP	0.000	1.900	-30.000		[°C]				
530019	dTz	0.000	1.900	-11.250		[°C]				
530020	TEMP	0.000	1.900	-30.000		[°C]				
530020	dTz	0.000	1.900	-11.250		[°C]				
530021	TEMP	0.000	2.500	-30.000		[°C]				
530021	dTz	0.000	2.500	-11.250		[°C]				
530022	TEMP	0.000	2.500	-30.000		[°C]				
530022	dTz	0.000	2.500	-11.250		[°C]				
530023	TEMP	0.000	2.500	-30.000		[°C]				
530023	dTz	0.000	2.500	-11.250		[°C]				
530024	TEMP	0.000	2.500	-30.000		[°C]				
530024	dTz	0.000	2.500	-11.250		[°C]				
1510001	TEMP	0.000	0.162	-30.000		[°C]				
1510001	dTz	0.000	0.162	-11.250		[°C]				
1510002	TEMP	0.000	0.162	-30.000		[°C]				
1510002	dTz	0.000	0.162	-11.250		[°C]				

SOFiSTiK AG - www.sofistik.de

Composite bridge 38+50+38, b=14.25m, 2x2HL1100R HISTAR460 , slab 0.30m C30/37
Obc termiczne/thermal loads

Loads acting on Beam-elements

Number	Type	a[m]	l[m]	Loadval	Loadval	Dimens.	ya[m]	za[m]	ye[m]	ze[m]
1510003	TEMP	0.000	0.255	-30.000		[°C]				
1510003	dTz	0.000	0.255	-11.250		[°C]				
1510004	TEMP	0.000	0.255	-30.000		[°C]				
1510004	dTz	0.000	0.255	-11.250		[°C]				
1510005	TEMP	0.000	0.401	-30.000		[°C]				
1510005	dTz	0.000	0.401	-11.250		[°C]				
1510006	TEMP	0.000	0.401	-30.000		[°C]				
1510006	dTz	0.000	0.401	-11.250		[°C]				
1510007	TEMP	0.000	0.585	-30.000		[°C]				
1510007	dTz	0.000	0.585	-11.250		[°C]				
1510008	TEMP	0.000	0.733	-30.000		[°C]				
1510008	dTz	0.000	0.733	-11.250		[°C]				
1510009	TEMP	0.000	0.923	-30.000		[°C]				
1510009	dTz	0.000	0.923	-11.250		[°C]				
1510010	TEMP	0.000	0.923	-30.000		[°C]				
1510010	dTz	0.000	0.923	-11.250		[°C]				
1510011	TEMP	0.000	0.922	-30.000		[°C]				
1510011	dTz	0.000	0.922	-11.250		[°C]				
1510012	TEMP	0.000	0.922	-30.000		[°C]				
1510012	dTz	0.000	0.922	-11.250		[°C]				
1510013	TEMP	0.000	1.142	-30.000		[°C]				
1510013	dTz	0.000	1.142	-11.250		[°C]				
1510014	TEMP	0.000	1.815	-30.000		[°C]				
1510014	dTz	0.000	1.815	-11.250		[°C]				
1510015	TEMP	0.000	1.155	-30.000		[°C]				
1510015	dTz	0.000	1.155	-11.250		[°C]				
1510016	TEMP	0.000	1.294	-30.000		[°C]				
1510016	dTz	0.000	1.294	-11.250		[°C]				
1510017	TEMP	0.000	0.779	-30.000		[°C]				
1510017	dTz	0.000	0.779	-11.250		[°C]				
1510018	TEMP	0.000	0.779	-30.000		[°C]				
1510018	dTz	0.000	0.779	-11.250		[°C]				
1510019	TEMP	0.000	0.566	-30.000		[°C]				
1510019	dTz	0.000	0.566	-11.250		[°C]				
1510020	TEMP	0.000	0.566	-30.000		[°C]				
1510020	dTz	0.000	0.566	-11.250		[°C]				
1510021	TEMP	0.000	0.348	-30.000		[°C]				
1510021	dTz	0.000	0.348	-11.250		[°C]				
1510022	TEMP	0.000	0.348	-30.000		[°C]				
1510022	dTz	0.000	0.348	-11.250		[°C]				
1510023	TEMP	0.000	0.230	-30.000		[°C]				
1510023	dTz	0.000	0.230	-11.250		[°C]				
1510024	TEMP	0.000	0.230	-30.000		[°C]				
1510024	dTz	0.000	0.230	-11.250		[°C]				
1510025	TEMP	0.000	0.152	-30.000		[°C]				
1510025	dTz	0.000	0.152	-11.250		[°C]				
1510026	TEMP	0.000	0.152	-30.000		[°C]				
1510026	dTz	0.000	0.152	-11.250		[°C]				
1510027	TEMP	0.000	1.515	-30.000		[°C]				
1510027	dTz	0.000	1.515	-11.250		[°C]				
1510028	TEMP	0.000	1.515	-30.000		[°C]				
1510028	dTz	0.000	1.515	-11.250		[°C]				
1510029	TEMP	0.000	1.083	-30.000		[°C]				
1510029	dTz	0.000	1.083	-11.250		[°C]				
1510030	TEMP	0.000	1.084	-30.000		[°C]				
1510030	dTz	0.000	1.084	-11.250		[°C]				
1510031	TEMP	0.000	0.701	-30.000		[°C]				
1510031	dTz	0.000	0.701	-11.250		[°C]				
1510032	TEMP	0.000	0.701	-30.000		[°C]				
1510032	dTz	0.000	0.701	-11.250		[°C]				
1520001	TEMP	0.000	0.152	-30.000		[°C]				
1520001	dTz	0.000	0.152	-11.250		[°C]				
1520002	TEMP	0.000	0.152	-30.000		[°C]				
1520002	dTz	0.000	0.152	-11.250		[°C]				

SOFiSTiK AG - www.sofistik.de

Composite bridge 38+50+38, b=14.25m, 2x2HL1100R HISTAR460 , slab 0.30m C30/37
Obc termiczne/thermal loads

Loads acting on Beam-elements

Number	Type	a[m]	l[m]	Loadval	Loadval	Dimens.	ya[m]	za[m]	ye[m]	ze[m]
1520003	TEMP	0.000	0.230	-30.000		[°C]				
1520003	dTz	0.000	0.230	-11.250		[°C]				
1520004	TEMP	0.000	0.230	-30.000		[°C]				
1520004	dTz	0.000	0.230	-11.250		[°C]				
1520005	TEMP	0.000	0.348	-30.000		[°C]				
1520005	dTz	0.000	0.348	-11.250		[°C]				
1520006	TEMP	0.000	0.348	-30.000		[°C]				
1520006	dTz	0.000	0.348	-11.250		[°C]				
1520007	TEMP	0.000	0.566	-30.000		[°C]				
1520007	dTz	0.000	0.566	-11.250		[°C]				
1520008	TEMP	0.000	0.566	-30.000		[°C]				
1520008	dTz	0.000	0.566	-11.250		[°C]				
1520009	TEMP	0.000	0.779	-30.000		[°C]				
1520009	dTz	0.000	0.779	-11.250		[°C]				
1520010	TEMP	0.000	0.779	-30.000		[°C]				
1520010	dTz	0.000	0.779	-11.250		[°C]				
1520011	TEMP	0.000	1.225	-30.000		[°C]				
1520011	dTz	0.000	1.225	-11.250		[°C]				
1520012	TEMP	0.000	1.225	-30.000		[°C]				
1520012	dTz	0.000	1.225	-11.250		[°C]				
1520013	TEMP	0.000	1.188	-30.000		[°C]				
1520013	dTz	0.000	1.188	-11.250		[°C]				
1520014	TEMP	0.000	1.188	-30.000		[°C]				
1520014	dTz	0.000	1.188	-11.250		[°C]				
1520015	TEMP	0.000	2.112	-30.000		[°C]				
1520015	dTz	0.000	2.112	-11.250		[°C]				
1520016	TEMP	0.000	2.112	-30.000		[°C]				
1520016	dTz	0.000	2.112	-11.250		[°C]				
1520017	TEMP	0.000	1.191	-30.000		[°C]				
1520017	dTz	0.000	1.191	-11.250		[°C]				
1520018	TEMP	0.000	1.259	-30.000		[°C]				
1520018	dTz	0.000	1.259	-11.250		[°C]				
1520019	TEMP	0.000	0.779	-30.000		[°C]				
1520019	dTz	0.000	0.779	-11.250		[°C]				
1520020	TEMP	0.000	0.779	-30.000		[°C]				
1520020	dTz	0.000	0.779	-11.250		[°C]				
1520021	TEMP	0.000	0.566	-30.000		[°C]				
1520021	dTz	0.000	0.566	-11.250		[°C]				
1520022	TEMP	0.000	0.566	-30.000		[°C]				
1520022	dTz	0.000	0.566	-11.250		[°C]				
1520023	TEMP	0.000	0.348	-30.000		[°C]				
1520023	dTz	0.000	0.348	-11.250		[°C]				
1520024	TEMP	0.000	0.348	-30.000		[°C]				
1520024	dTz	0.000	0.348	-11.250		[°C]				
1520025	TEMP	0.000	0.230	-30.000		[°C]				
1520025	dTz	0.000	0.230	-11.250		[°C]				
1520026	TEMP	0.000	0.230	-30.000		[°C]				
1520026	dTz	0.000	0.230	-11.250		[°C]				
1520027	TEMP	0.000	0.152	-30.000		[°C]				
1520027	dTz	0.000	0.152	-11.250		[°C]				
1520028	TEMP	0.000	0.152	-30.000		[°C]				
1520028	dTz	0.000	0.152	-11.250		[°C]				
1520029	TEMP	0.000	1.588	-30.000		[°C]				
1520029	dTz	0.000	1.588	-11.250		[°C]				
1520030	TEMP	0.000	1.443	-30.000		[°C]				
1520030	dTz	0.000	1.443	-11.250		[°C]				
1520031	TEMP	0.000	1.084	-30.000		[°C]				
1520031	dTz	0.000	1.084	-11.250		[°C]				
1520032	TEMP	0.000	1.083	-30.000		[°C]				
1520032	dTz	0.000	1.083	-11.250		[°C]				
1520033	TEMP	0.000	0.659	-30.000		[°C]				
1520033	dTz	0.000	0.659	-11.250		[°C]				
1520034	TEMP	0.000	0.743	-30.000		[°C]				
1520034	dTz	0.000	0.743	-11.250		[°C]				

SOFiSTiK AG - www.sofistik.de

Composite bridge 38+50+38, b=14.25m, 2x2HL1100R HISTAR460 , slab 0.30m C30/37
Obc termiczne/thermal loads

Loads acting on Beam-elements

Number	Type	a[m]	l[m]	Loadval	Loadval	Dimens.	ya[m]	za[m]	ye[m]	ze[m]
1530001	TEMP	0.000	0.164	-30.000		[°C]				
1530001	dTz	0.000	0.164	-11.250		[°C]				
1530002	TEMP	0.000	0.141	-30.000		[°C]				
1530002	dTz	0.000	0.141	-11.250		[°C]				
1530003	TEMP	0.000	0.230	-30.000		[°C]				
1530003	dTz	0.000	0.230	-11.250		[°C]				
1530004	TEMP	0.000	0.230	-30.000		[°C]				
1530004	dTz	0.000	0.230	-11.250		[°C]				
1530005	TEMP	0.000	0.223	-30.000		[°C]				
1530005	dTz	0.000	0.223	-11.250		[°C]				
1530006	TEMP	0.000	0.473	-30.000		[°C]				
1530006	dTz	0.000	0.473	-11.250		[°C]				
1530007	TEMP	0.000	0.615	-30.000		[°C]				
1530007	dTz	0.000	0.615	-11.250		[°C]				
1530008	TEMP	0.000	0.517	-30.000		[°C]				
1530008	dTz	0.000	0.517	-11.250		[°C]				
1530009	TEMP	0.000	0.779	-30.000		[°C]				
1530009	dTz	0.000	0.779	-11.250		[°C]				
1530010	TEMP	0.000	0.779	-30.000		[°C]				
1530010	dTz	0.000	0.779	-11.250		[°C]				
1530011	TEMP	0.000	1.225	-30.000		[°C]				
1530011	dTz	0.000	1.225	-11.250		[°C]				
1530012	TEMP	0.000	1.225	-30.000		[°C]				
1530012	dTz	0.000	1.225	-11.250		[°C]				
1530013	TEMP	0.000	0.988	-30.000		[°C]				
1530013	dTz	0.000	0.988	-11.250		[°C]				
1530014	TEMP	0.000	1.388	-30.000		[°C]				
1530014	dTz	0.000	1.388	-11.250		[°C]				
1530015	TEMP	0.000	1.747	-30.000		[°C]				
1530015	dTz	0.000	1.747	-11.250		[°C]				
1530016	TEMP	0.000	2.477	-30.000		[°C]				
1530016	dTz	0.000	2.477	-11.250		[°C]				
1530017	TEMP	0.000	0.923	-30.000		[°C]				
1530017	dTz	0.000	0.923	-11.250		[°C]				
1530018	TEMP	0.000	0.923	-30.000		[°C]				
1530018	dTz	0.000	0.923	-11.250		[°C]				
1530019	TEMP	0.000	0.659	-30.000		[°C]				
1530019	dTz	0.000	0.659	-11.250		[°C]				
1530020	TEMP	0.000	0.659	-30.000		[°C]				
1530020	dTz	0.000	0.659	-11.250		[°C]				
1530021	TEMP	0.000	0.468	-30.000		[°C]				
1530021	dTz	0.000	0.468	-11.250		[°C]				
1530022	TEMP	0.000	0.334	-30.000		[°C]				
1530022	dTz	0.000	0.334	-11.250		[°C]				
1530023	TEMP	0.000	0.255	-30.000		[°C]				
1530023	dTz	0.000	0.255	-11.250		[°C]				
1530024	TEMP	0.000	0.255	-30.000		[°C]				
1530024	dTz	0.000	0.255	-11.250		[°C]				
1530025	TEMP	0.000	0.162	-30.000		[°C]				
1530025	dTz	0.000	0.162	-11.250		[°C]				
1530026	TEMP	0.000	0.162	-30.000		[°C]				
1530026	dTz	0.000	0.162	-11.250		[°C]				
1530027	TEMP	0.000	1.478	-30.000		[°C]				
1530027	dTz	0.000	1.478	-11.250		[°C]				
1530028	TEMP	0.000	1.478	-30.000		[°C]				
1530028	dTz	0.000	1.478	-11.250		[°C]				
1530029	TEMP	0.000	0.922	-30.000		[°C]				
1530029	dTz	0.000	0.922	-11.250		[°C]				
1530030	TEMP	0.000	0.922	-30.000		[°C]				
1530030	dTz	0.000	0.922	-11.250		[°C]				

SOFiSTiK AG - www.sofistik.de

Composite bridge 38+50+38, b=14.25m, 2x2HL1100R HISTAR460 , slab 0.30m C30/37
Osiadania/settlements

Actions

type	part	sup	Title	γ-u	γ-f	γ-a	ψ-0	ψ-1	ψ-2
X		excl	singl load cases	1.00	0.00	1.00	1.00	1.00	1.00
G	G	perm	dead load	1.35	1.00	1.00	1.00	1.00	1.00
G_1	G	perm	gk	1.35	1.00	1.00	1.00	1.00	1.00
G_2	G	perm	gn	1.35	1.00	1.00	1.00	1.00	1.00
G_3	G	perm	soil horisontal	1.50	1.00	1.00	1.00	1.00	1.00
C	P	perm	C+S	1.35	1.00	1.00	1.00	1.00	1.00
C_1	P	perm	C+S	1.35	1.00	1.00	1.00	1.00	1.00
C_2	P	perm	C+S	1.35	0.00	1.00	1.00	1.00	1.00
F	Q	cond	settlements	1.20	0.00	1.00	1.00	1.00	1.00
F_1	Q	cond	settlements	1.20	0.00	1.00	1.00	1.00	1.00
L	Q	excl	live loading	1.50	0.00	1.00	0.75	0.75	0.20
L_1	Q	excl	TS from LM1 EN	1.50	0.00	1.00	0.75	0.75	0.20
Q	Q	cond	gr1a EN	1.50	0.00	1.00	0.75	0.75	0.20
Q_1	Q	cond	gr1a vertical EN	1.50	0.00	1.00	0.75	0.75	0.20
Q_2	Q	cond	B+A EN	1.50	0.00	1.00	0.75	0.75	0.20
Q_3	Q	cond	horis perp EN	1.50	0.00	1.00	0.75	0.75	0.20
T	Q	excl	temp	1.50	0.00	1.00	0.60	0.60	0.50
T_1	Q	excl	temp	1.50	0.00	1.00	0.60	0.60	0.50
			Reduction coefficient xsi		0.850				

Load Case 801 (F_1) f10mm P(1)

Factor forces and moments		1.000	
Factor dead weight	DL-XX	0.000	
Factor dead weight	DL-YY	0.000	
Factor dead weight	DL-ZZ	0.000	
unfavourable safety factor		1.200	
favourable safety factor		0.000	
Combination coefficient ψ-0		1.000	(rare)
Combination coefficient ψ-1'		1.000	(non frequent)
Combination coefficient ψ-1		1.000	(frequent)
Combination coefficient ψ-2		1.000	(permanent)

Loads

Kind	Referenceto		Projection W[m]	Coordinates X[m]	Y[m]	Z[m]	Type	Loadvalue
Point				-1.500	0.000	32.000	WZZ	10.000 [mm]
	NODE	1126				activated		100.00 percent
Point				-1.500	8.000	32.000	WZZ	10.000 [mm]
	NODE	1226				activated		100.00 percent
Point				1.500	0.000	32.000	WZZ	10.000 [mm]
	NODE	1136				activated		100.00 percent
Point				1.500	8.000	32.000	WZZ	10.000 [mm]
	NODE	1236				activated		100.00 percent

Load Case 802 (F_1) f10mm P(2)

Factor forces and moments		1.000	
Factor dead weight	DL-XX	0.000	
Factor dead weight	DL-YY	0.000	
Factor dead weight	DL-ZZ	0.000	
unfavourable safety factor		1.200	
favourable safety factor		0.000	
Combination coefficient ψ-0		1.000	(rare)
Combination coefficient ψ-1'		1.000	(non frequent)
Combination coefficient ψ-1		1.000	(frequent)
Combination coefficient ψ-2		1.000	(permanent)

Loads

Kind	Referenceto		Projection W[m]	Coordinates X[m]	Y[m]	Z[m]	Type	Loadvalue
Point				36.500	0.000	32.000	WZZ	10.000 [mm]
	NODE	2126				activated		100.00 percent
Point				36.500	8.000	32.000	WZZ	10.000 [mm]
	NODE	2226				activated		100.00 percent
Point				39.500	0.000	32.000	WZZ	10.000 [mm]

SOFiSTiK AG - www.sofistik.de

Composite bridge 38+50+38, b=14.25m, 2x2HL1100R HISTAR460 , slab 0.30m C30/37
Osiadania/settlements

Loads

Kind	Referenceto	Projection W[m]	Coordinates X[m]	Y[m]	Z[m]	Type	Loadvalue
	NODE 2136				activated		100.00 percent
Point			39.500	8.000	32.000	WZZ	10.000 [mm]
	NODE 2236				activated		100.00 percent

Load Case 803 (F_1) f10mm P(3)

Factor forces and moments		1.000	
Factor dead weight	DL-XX	0.000	
Factor dead weight	DL-YY	0.000	
Factor dead weight	DL-ZZ	0.000	
unfavourable safety factor		1.200	
favourable safety factor		0.000	
Combination coefficient ψ-0		1.000	(rare)
Combination coefficient ψ-1'		1.000	(non frequent)
Combination coefficient ψ-1		1.000	(frequent)
Combination coefficient ψ-2		1.000	(permanent)

Loads

Kind	Referenceto	Projection W[m]	Coordinates X[m]	Y[m]	Z[m]	Type	Loadvalue
Point			86.500	0.000	32.000	WZZ	10.000 [mm]
	NODE 3126				activated		100.00 percent
Point			86.500	8.000	32.000	WZZ	10.000 [mm]
	NODE 3226				activated		100.00 percent
Point			89.500	0.000	32.000	WZZ	10.000 [mm]
	NODE 3136				activated		100.00 percent
Point			89.500	8.000	32.000	WZZ	10.000 [mm]
	NODE 3236				activated		100.00 percent

Load Case 804 (F_1) f10mm P(4)

Factor forces and moments		1.000	
Factor dead weight	DL-XX	0.000	
Factor dead weight	DL-YY	0.000	
Factor dead weight	DL-ZZ	0.000	
unfavourable safety factor		1.200	
favourable safety factor		0.000	
Combination coefficient ψ-0		1.000	(rare)
Combination coefficient ψ-1'		1.000	(non frequent)
Combination coefficient ψ-1		1.000	(frequent)
Combination coefficient ψ-2		1.000	(permanent)

Loads

Kind	Referenceto	Projection W[m]	Coordinates X[m]	Y[m]	Z[m]	Type	Loadvalue
Point			124.500	0.000	32.000	WZZ	10.000 [mm]
	NODE 4126				activated		100.00 percent
Point			124.500	8.000	32.000	WZZ	10.000 [mm]
	NODE 4226				activated		100.00 percent
Point			127.500	0.000	32.000	WZZ	10.000 [mm]
	NODE 4136				activated		100.00 percent
Point			127.500	8.000	32.000	WZZ	10.000 [mm]
	NODE 4236				activated		100.00 percent

SOFiSTiK AG - www.sofistik.de

Composite bridge 38+50+38, b=14.25m, 2x2HL1100R HISTAR460 , slab 0.30m C30/37

Global Settings

Dead load of elements is automatically activated.
Creep and shrinkage analysis will be done by AQB.
Creep and shrinkage values are calculated in advance in CSM.

Construction Stages

CS	Type	Time d	RH %	Temp °C	launch m	laun_2 m	Title
3	G_1						supports
5	C_1	28	80	8			C+S supports 28days
10	G_1						Steel structure
15	C_1	28	80	8			C+S 28days
20	G_1						scaffoldings+bottom concrete wei
21	G_1						stiffnes of bottom concrete ON
25	C_1	28	80	8			C+S bottom concrete 28days
26	B						zero step for consistency reason
27	G_1						weight of insitu wet concrete sl
30	G_1						scaffoldings removed
35	C_1	56	80	8			C+S til opening 56days
40	G_2						superimposed dead loads
45	C_2	296	80	8			C+S infinity
46	C_2	894	80	8			C+S infinity
47	C_2	2693	80	8			C+S infinity
48	C_2	8123	80	8			C+S infinity
49	C_2	24494	80	8			C+S infinity

Group Properties

Grp	active from CS	active until CS	deadload from CS	Hfix from	Bedd from	Deck from	ASTI until	T0 d	TS d	FAC1	PHIF	QUEA	QEMX
11	3	999	3					14	5		1.00		
12	3	999	3					14	5		1.00		
13	3	999	3					14	5		1.00		
14	3	999	3					14	5		1.00		
21	3	999	3					14	5		1.00		
22	3	999	3					14	5		1.00		
23	3	999	3					14	5		1.00		
24	3	999	3					14	5		1.00		
31	3	999	3					14	5		1.00		
32	3	999	3					14	5		1.00		
33	3	999	3					14	5		1.00		
34	3	999	3					14	5		1.00		
41	10	999	10					14	5		1.00		
42	10	999	10					14	5		1.00		
43	10	999	10					14	5		1.00		
44	10	999	10					14	5		1.00		
50	group exists but is never used												
51	10	999	10	3		-3		14	5		1.00		
52	10	999	10	3		-3		14	5		1.00		
53	10	999	10	3		-3		14	5		1.00		
61	10	999	10	3		-3		14	5		1.00		
62	10	999	10	3		-3		14	5		1.00		
63	10	999	10	3		-3		14	5		1.00		
64	10	999	10	3		-3		14	5		1.00		
71	10	999	10					14	5		1.00		
72	10	999	10					14	5		1.00		
73	10	999	10					14	5		1.00		
74	10	999	10					14	5		1.00		
81	30	999	30					14	5		1.00		
82	30	999	30					14	5		1.00		
83	30	999	30					14	5		1.00		
91	group exists but is never used												
92	group exists but is never used												
93	group exists but is never used												
111	3	999	3					14	5		1.00		
112	3	999	3					14	5		1.00		
113	3	999	3					14	5		1.00		
114	3	999	3					14	5		1.00		

SOFiSTiK AG - www.sofistik.de

Composite bridge 38+50+38, b=14.25m, 2x2HL1100R HISTAR460 , slab 0.30m C30/37

Group Properties

Grp	active from CS	active untilCS	deadload from CS	Hfix from	Bedd from	Deck from	ASTI until	T0 d	TS d	FAC1	PHIF	QUEA	QEMX
151	10	999	10	3		-3		14	5		1.00		
152	10	999	10	3		-3		14	5		1.00		
153	10	999	10	3		-3		14	5		1.00		
191	group exists but is never used												
192	group exists but is never used												
193	group exists but is never used												

Hfix: beam hinges of this group are fixed starting from this Constrction Stage
Deck: dead weight activation of cross sectional construction stages

Additional Loads

LC	Type	active from CS	active until CS	faktor
5	G_2	40	999	1.000000
2	G_1	20	29	1.000000
3	G_1	27	29	1.000000
4	G_1	27	999	1.000000

Scalable creep and shrinkage parameters, additional input

MNO	GRP	PHI-total	EPS-total	d-eff-QUAD[m]	T0	TS
50	-	0.010	-0.000002	-	-	-
25	-	0.010	-0.000002	-	-	-

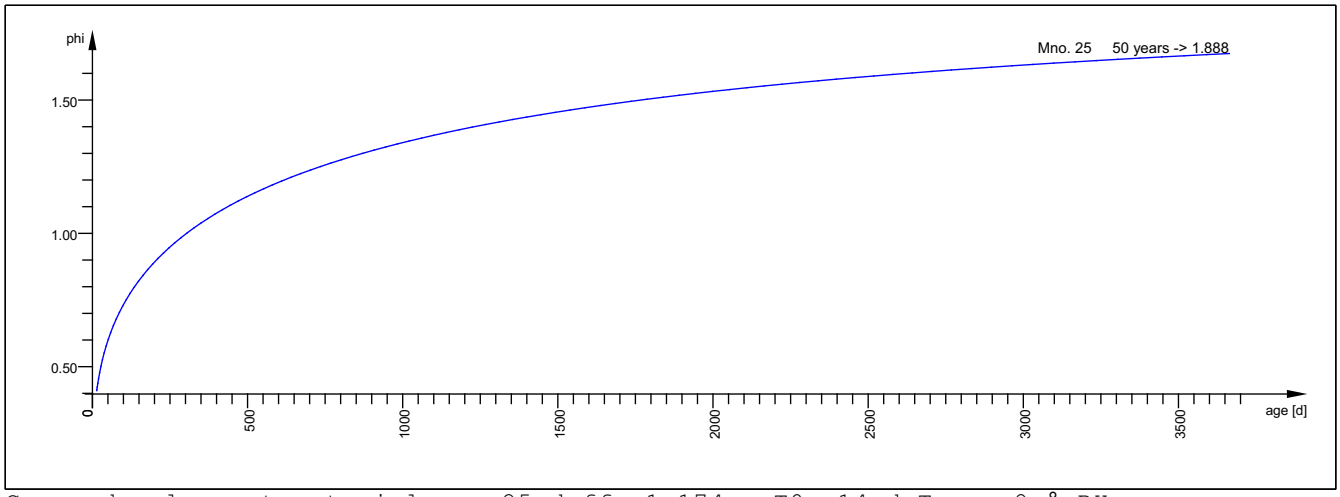

Creep development material no. 25 deff= 1.174 m T0= 14 d Temp= 8 ° RH=

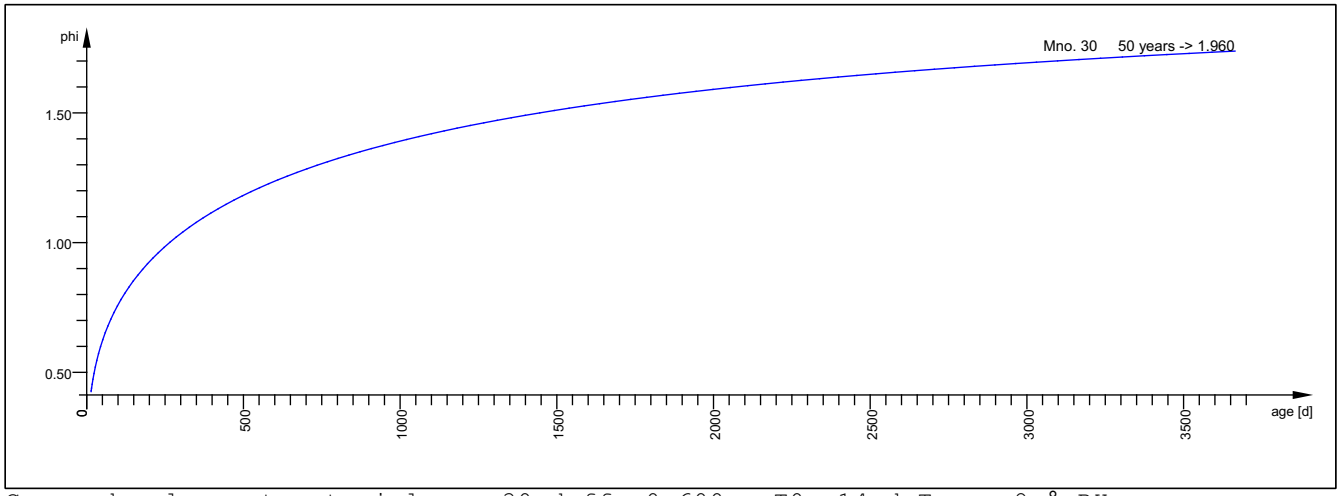

Creep development material no. 30 deff= 0.600 m T0= 14 d Temp= 8 ° RH=

SOFiSTiK AG - www.sofistik.de

Composite bridge 38+50+38, b=14.25m, 2x2HL1100R HISTAR460 , slab 0.30m C30/37

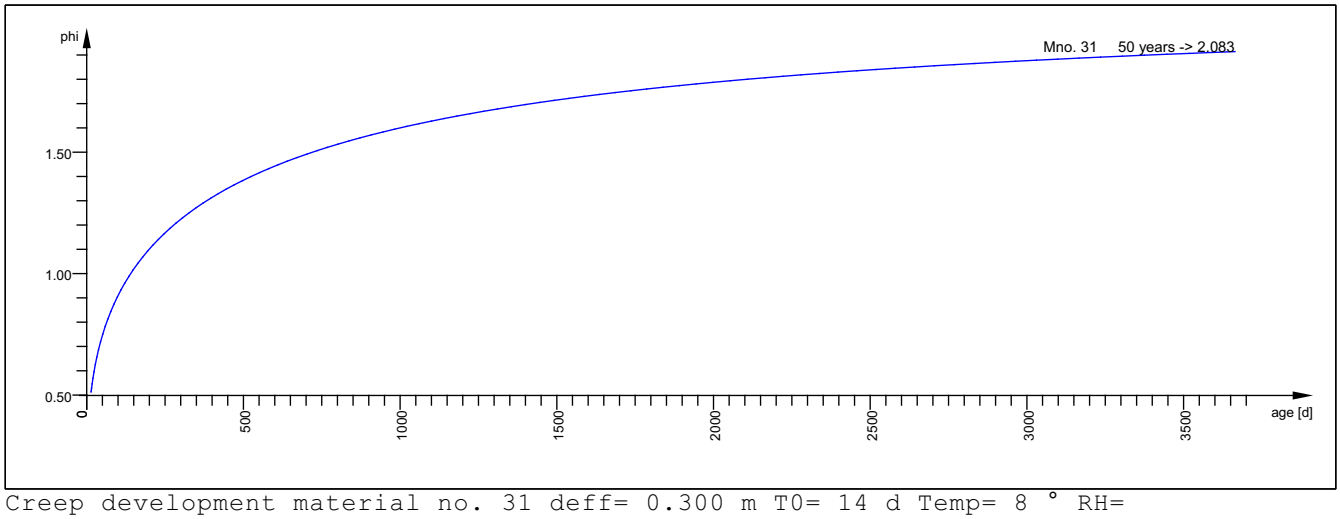

Creep development material no. 31 deff= 0.300 m T0= 14 d Temp= 8 ° RH=

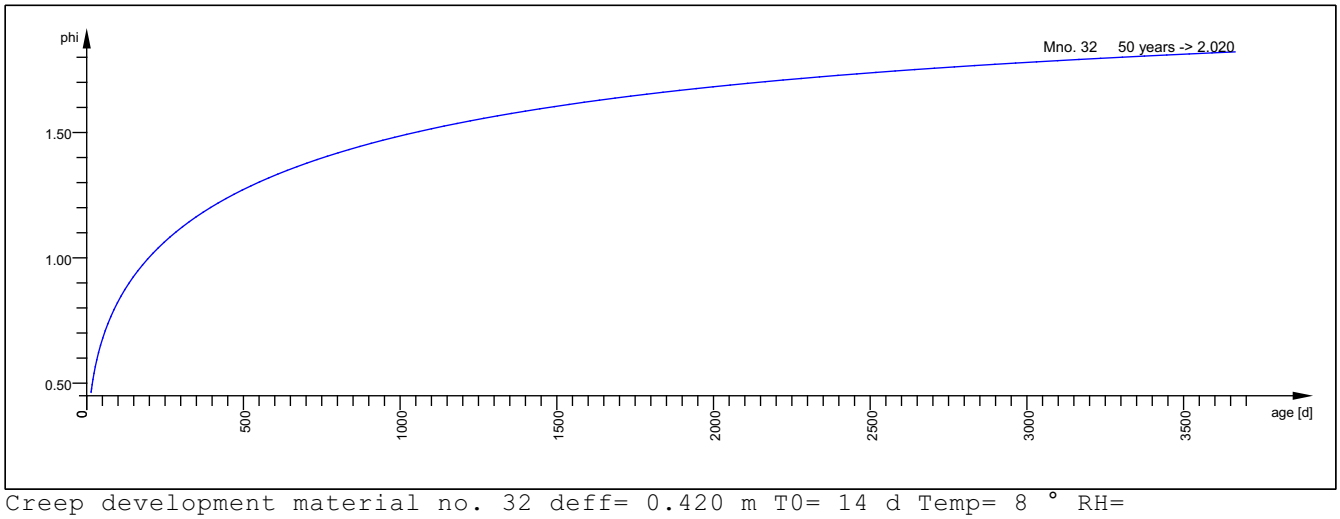

Creep development material no. 32 deff= 0.420 m T0= 14 d Temp= 8 ° RH=

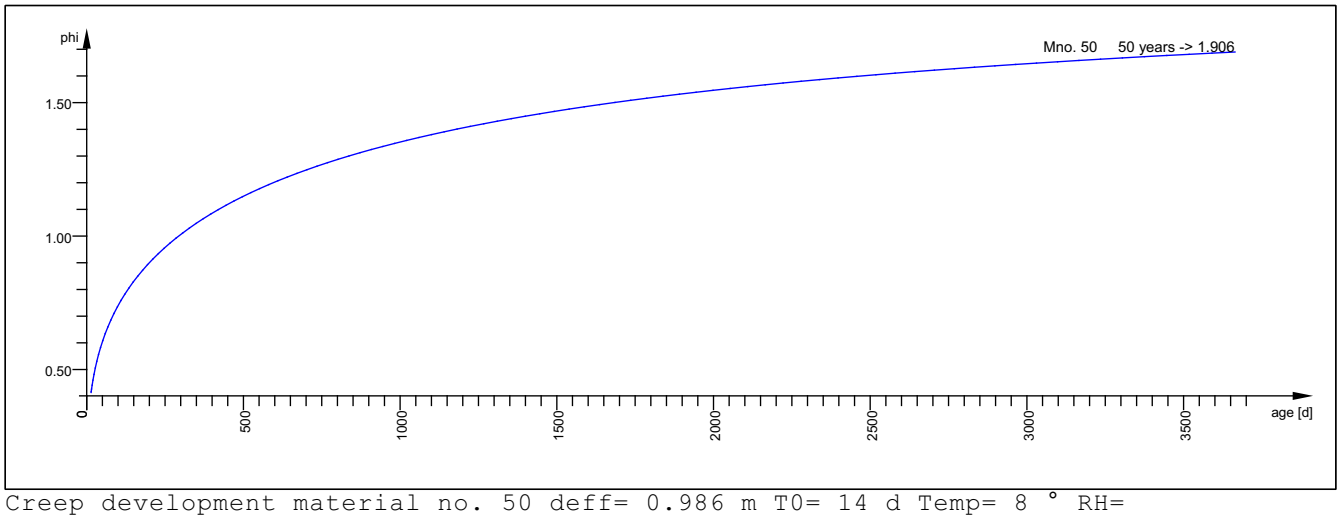

Creep development material no. 50 deff= 0.986 m T0= 14 d Temp= 8 ° RH=

SOFiSTiK AG - www.sofistik.de

Composite bridge 38+50+38, b=14.25m, 2x2HL1100R HISTAR460 , slab 0.30m C30/37

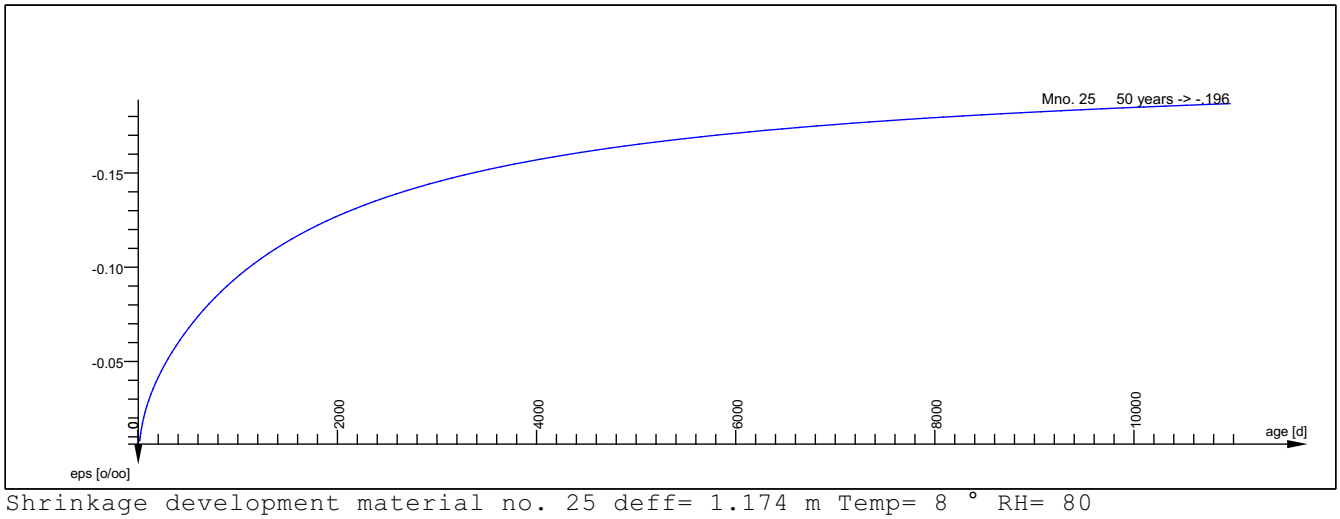

Shrinkage development material no. 25 deff= 1.174 m Temp= 8 ° RH= 80

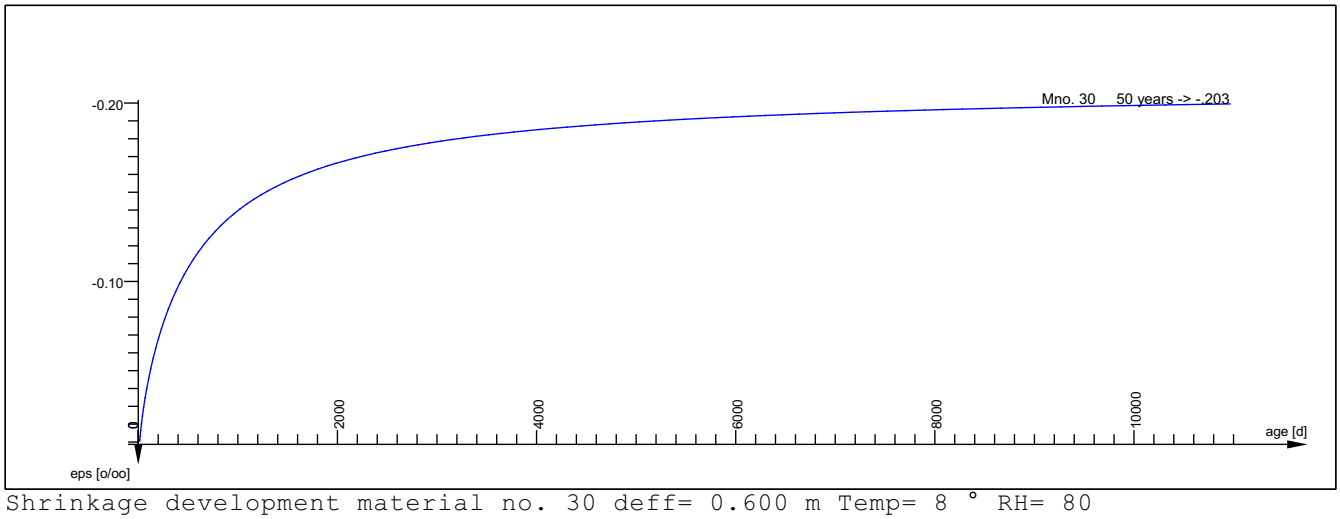

Shrinkage development material no. 30 deff= 0.600 m Temp= 8 ° RH= 80

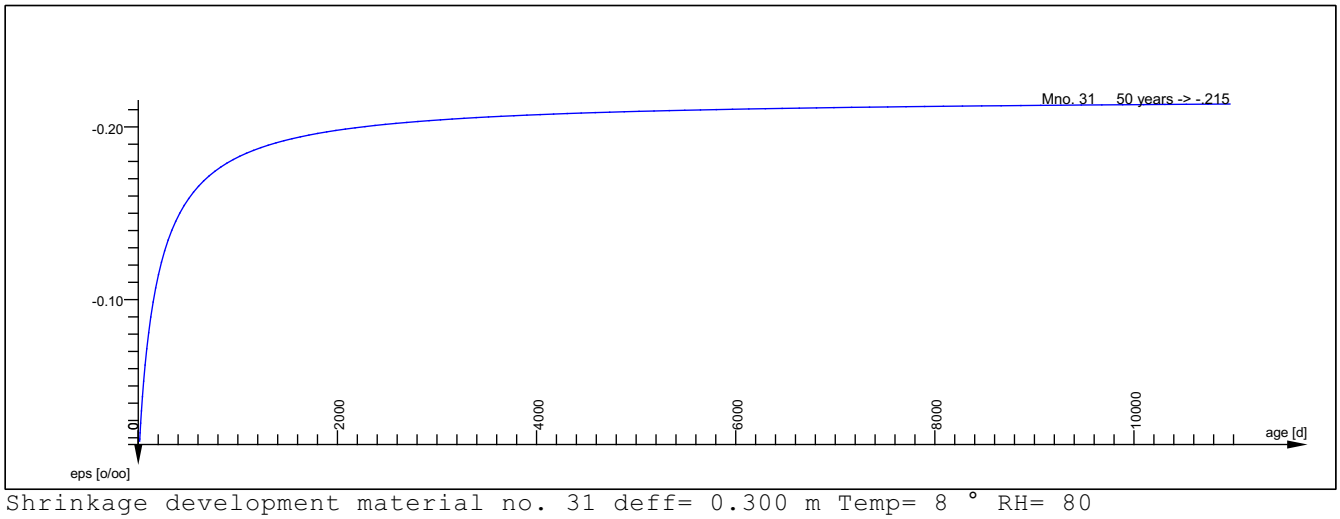

Shrinkage development material no. 31 deff= 0.300 m Temp= 8 ° RH= 80

SOFiSTiK AG - www.sofistik.de

Composite bridge 38+50+38, b=14.25m, 2x2HL1100R HISTAR460 , slab 0.30m C30/37

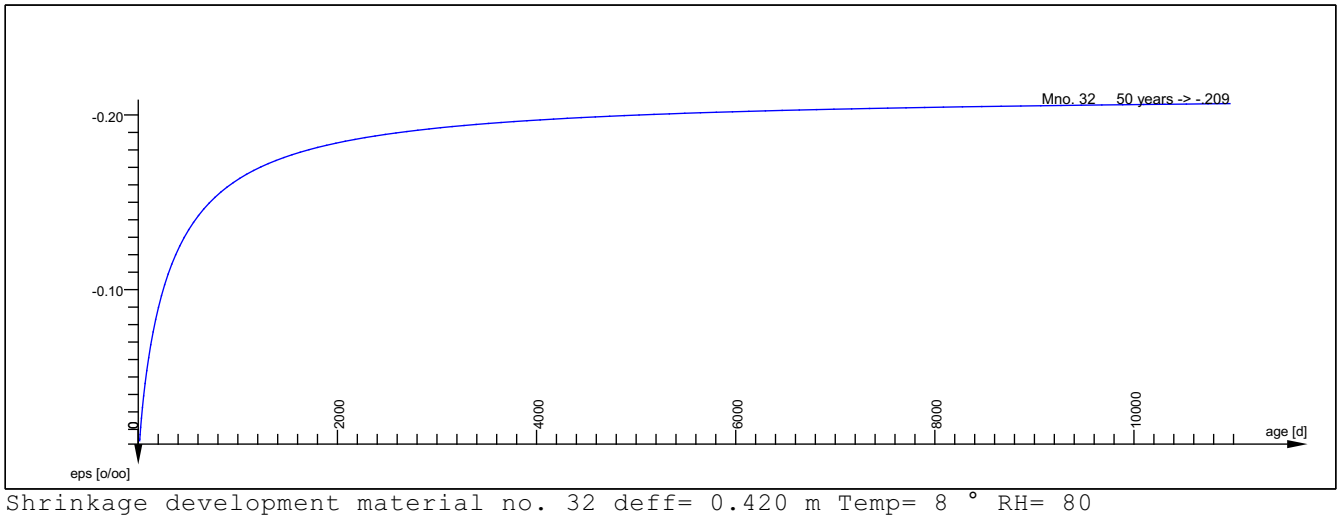

Shrinkage development material no. 32 deff= 0.420 m Temp= 8 ° RH= 80

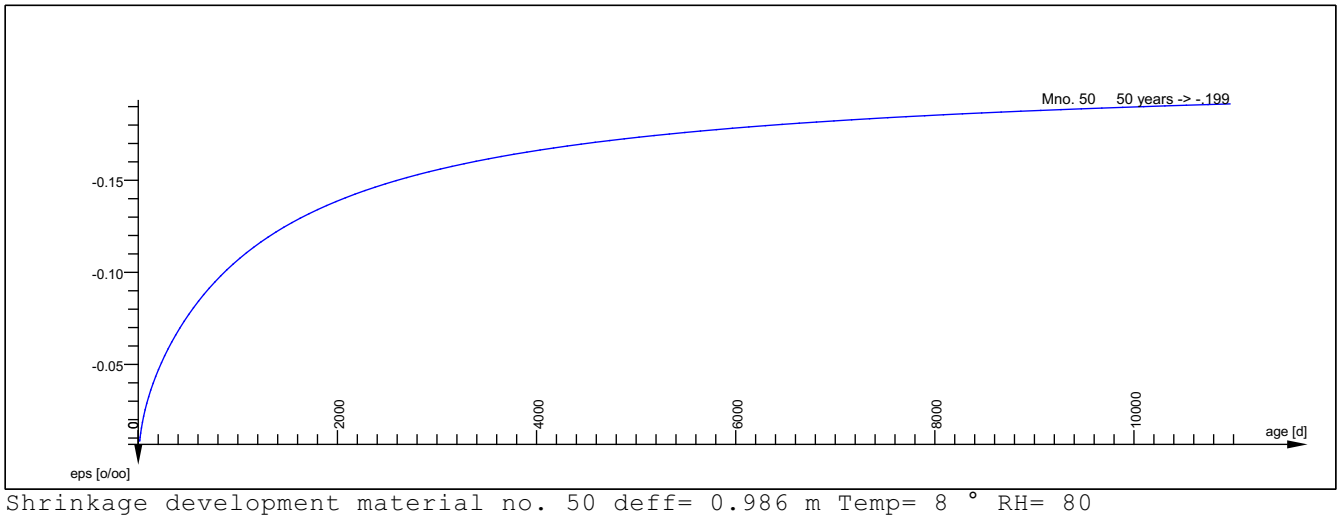

Shrinkage development material no. 50 deff= 0.986 m Temp= 8 ° RH= 80

Creep values are evaluated according to the design code of the database.

Creep Values

Grp	Mno	Type	deff [m]	T0 d	CS 5	CS 15	CS 25	CS 35	CS 45	CS 46
			Time --->		28	28	28	56	296	894
			RH % --->		80	80	80	80	80	80
			Temp --->		8	8	8	8	8	8
11	50	-	0.986	14	0.00	0.00	0.00	0.00	0.00	0.00
12	50	-	0.986	14	0.00	0.00	0.00	0.00	0.00	0.00
13	50	-	0.986	14	0.00	0.00	0.00	0.00	0.00	0.00
14	50	-	0.986	14	0.00	0.00	0.00	0.00	0.00	0.00
21	50	beam	1.154	14	0.00	0.00	0.00	0.00	0.00	0.00
22	50	beam	1.154	14	0.00	0.00	0.00	0.00	0.00	0.00
23	50	beam	1.154	14	0.00	0.00	0.00	0.00	0.00	0.00
24	50	beam	1.154	14	0.00	0.00	0.00	0.00	0.00	0.00
31	50	-	1.382	14	0.00	0.00	0.00	0.00	0.00	0.00
32	50	beam	0.596	14	0.00	0.00	0.00	0.00	0.00	0.00
33	50	beam	0.596	14	0.00	0.00	0.00	0.00	0.00	0.00
34	50	-	1.382	14	0.00	0.00	0.00	0.00	0.00	0.00
51	30	beam	0.600	14	-	-	-	0.64	0.44	0.38
51	31	beam	0.300	14	-	-	-	0.77	0.50	0.39
52	30	beam	0.600	14	-	-	-	0.64	0.44	0.38
52	31	beam	0.300	14	-	-	-	0.77	0.50	0.39
53	30	beam	0.600	14	-	-	-	0.64	0.44	0.38
53	31	beam	0.300	14	-	-	-	0.77	0.50	0.39

SOFiSTiK AG - www.sofistik.de

Composite bridge 38+50+38, b=14.25m, 2x2HL1100R HISTAR460 , slab 0.30m C30/37

Creep Values

Grp	Mno	Type	deff [m]	T0 d	CS 5	CS 15	CS 25	CS 35	CS 45	CS 46
			Time ---->		**28**	**28**	**28**	**56**	**296**	**894**
			RH % ---->		**80**	**80**	**80**	**80**	**80**	**80**
			Temp ---->		**8**	**8**	**8**	**8**	**8**	**8**
61	25	beam	1.174	14	-	-	0.00	0.00	0.00	0.00
61	31	beam	0.266	14	-	-	-	0.80	0.52	0.39
62	25	beam	1.174	14	-	-	0.00	0.00	0.00	0.00
62	31	beam	0.266	14	-	-	-	0.80	0.52	0.39
63	25	beam	1.174	14	-	-	0.00	0.00	0.00	0.00
63	31	beam	0.266	14	-	-	-	0.80	0.52	0.39
64	25	beam	1.174	14	-	-	0.00	0.00	0.00	0.00
64	31	beam	0.266	14	-	-	-	0.80	0.52	0.39
81	32	-	0.420	14	-	-	-	0.70	0.47	0.39
82	32	-	0.420	14	-	-	-	0.70	0.47	0.39
83	32	-	0.420	14	-	-	-	0.70	0.47	0.39
151	30	beam	0.600	14	-	-	-	0.64	0.44	0.38
151	31	beam	0.268	14	-	-	-	0.80	0.51	0.39
151	25	beam	1.174	14	-	-	0.00	0.00	0.00	0.00
152	25	beam	1.174	14	-	-	0.00	0.00	0.00	0.00
152	31	beam	0.266	14	-	-	-	0.80	0.52	0.39
153	25	beam	1.174	14	-	-	0.00	0.00	0.00	0.00
153	31	beam	0.269	14	-	-	-	0.79	0.51	0.39
153	30	beam	0.600	14	-	-	-	0.64	0.44	0.38

Creep Values

Grp	Mno	Type	deff [m]	T0 d	CS 47	CS 48	CS 49	total	
			Time ---->		**2693**	**8123**	**24494**	**35310**	
			RH % ---->		**80**	**80**	**80**		
			Temp ---->		**8**	**8**	**8**		
11	50	-	0.986	14	0.00	0.00	0.00	0.01	/ 1.05 **
12	50	-	0.986	14	0.00	0.00	0.00	0.01	/ 1.05 **
13	50	-	0.986	14	0.00	0.00	0.00	0.01	/ 1.05 **
14	50	-	0.986	14	0.00	0.00	0.00	0.01	/ 1.05 **
21	50	beam	1.154	14	0.00	0.00	0.00	0.01	/ 1.05 **
22	50	beam	1.154	14	0.00	0.00	0.00	0.01	/ 1.05 **
23	50	beam	1.154	14	0.00	0.00	0.00	0.01	/ 1.05 **
24	50	beam	1.154	14	0.00	0.00	0.00	0.01	/ 1.05 **
31	50	-	1.382	14	0.00	0.00	0.00	0.01	/ 1.05 **
32	50	beam	0.596	14	0.00	0.00	0.00	0.01	/ 1.05 **
33	50	beam	0.596	14	0.00	0.00	0.00	0.01	/ 1.05 **
34	50	-	1.382	14	0.00	0.00	0.00	0.01	/ 1.05 **
51	30	beam	0.600	14	0.30	0.17	0.07	2.00	/ 1.05 **
51	31	beam	0.300	14	0.26	0.13	0.05	2.11	/ 1.05 **
52	30	beam	0.600	14	0.30	0.17	0.07	2.00	/ 1.05 **
52	31	beam	0.300	14	0.26	0.13	0.05	2.11	/ 1.05 **
53	30	beam	0.600	14	0.30	0.17	0.07	2.00	/ 1.05 **
53	31	beam	0.300	14	0.26	0.13	0.05	2.11	/ 1.05 **
61	25	beam	1.174	14	0.00	0.00	0.00	0.01	/ 1.05 **
61	31	beam	0.266	14	0.26	0.12	0.05	2.13	/ 1.05 **
62	25	beam	1.174	14	0.00	0.00	0.00	0.01	/ 1.05 **
62	31	beam	0.266	14	0.26	0.12	0.05	2.13	/ 1.05 **
63	25	beam	1.174	14	0.00	0.00	0.00	0.01	/ 1.05 **
63	31	beam	0.266	14	0.26	0.12	0.05	2.13	/ 1.05 **
64	25	beam	1.174	14	0.00	0.00	0.00	0.01	/ 1.05 **
64	31	beam	0.266	14	0.26	0.12	0.05	2.13	/ 1.05 **
81	32	-	0.420	14	0.28	0.15	0.06	2.05	/ 1.05 **
82	32	-	0.420	14	0.28	0.15	0.06	2.05	/ 1.05 **
83	32	-	0.420	14	0.28	0.15	0.06	2.05	/ 1.05 **
151	30	beam	0.600	14	0.30	0.17	0.07	2.00	/ 1.05 **

SOFiSTiK AG - www.sofistik.de

Composite bridge 38+50+38, b=14.25m, 2x2HL1100R HISTAR460 , slab 0.30m C30/37

Creep Values

Grp	Mno	Type	deff [m]	T0 d	CS 47	CS 48	CS 49	total
			Time --->		2693	8123	24494	35310
			RH % --->		80	80	80	
			Temp --->		8	8	8	
151	31	beam	0.268	14	0.26	0.12	0.05	2.13 / 1.05 **
151	25	beam	1.174	14	0.00	0.00	0.00	0.01 / 1.05 **
152	25	beam	1.174	14	0.00	0.00	0.00	0.01 / 1.05 **
152	31	beam	0.266	14	0.26	0.12	0.05	2.13 / 1.05 **
153	25	beam	1.174	14	0.00	0.00	0.00	0.01 / 1.05 **
153	31	beam	0.269	14	0.26	0.12	0.05	2.13 / 1.05 **
153	30	beam	0.600	14	0.30	0.17	0.07	2.00 / 1.05 **

** For the ** marked elements, the creep value will be additionally devided by the printed factor in AQB due to the problem of the reference E-modulus [Ecm/Ec0]. Please refer to Heft 525 Deutscher Ausschuss fuer Stahlbeton S. 65ff.

Shrinkage Values *10^-6

Grp	Mno	Type	deff [m]	TS d	CS 5	CS 15	CS 25	CS 35	CS 45	CS 46
			Time --->		28	28	28	56	296	894
			RH % --->		80	80	80	80	80	80
			Temp --->		8	8	8	8	8	8
11	50	-	0.986	5	-0.2	-0.1	-0.1	-0.1	-0.4	-0.6
12	50	-	0.986	5	-0.2	-0.1	-0.1	-0.1	-0.4	-0.6
13	50	-	0.986	5	-0.2	-0.1	-0.1	-0.1	-0.4	-0.6
14	50	-	0.986	5	-0.2	-0.1	-0.1	-0.1	-0.4	-0.6
21	50	beam	1.154	5	-0.2	-0.1	-0.1	-0.1	-0.3	-0.5
22	50	beam	1.154	5	-0.2	-0.1	-0.1	-0.1	-0.3	-0.5
23	50	beam	1.154	5	-0.2	-0.1	-0.1	-0.1	-0.3	-0.5
24	50	beam	1.154	5	-0.2	-0.1	-0.1	-0.1	-0.3	-0.5
31	50	-	1.382	5	-0.1	-0.1	-0.1	-0.1	-0.3	-0.5
32	50	beam	0.596	5	-0.2	-0.1	-0.1	-0.2	-0.5	-0.6
33	50	beam	0.596	5	-0.2	-0.1	-0.1	-0.2	-0.5	-0.6
34	50	-	1.382	5	-0.1	-0.1	-0.1	-0.1	-0.3	-0.5
51	30	beam	0.600	5	-	-	-	-30.2	-61.2	-57.6
51	31	beam	0.300	5	-	-	-	-54.0	-88.2	-46.1
52	30	beam	0.600	5	-	-	-	-30.2	-61.2	-57.6
52	31	beam	0.300	5	-	-	-	-54.0	-88.2	-46.1
53	30	beam	0.600	5	-	-	-	-30.2	-61.2	-57.6
53	31	beam	0.300	5	-	-	-	-54.0	-88.2	-46.1
61	25	beam	1.174	5	-	-	-0.2	-0.1	-0.4	-0.6
61	31	beam	0.266	5	-	-	-	-61.3	-93.2	-43.9
62	25	beam	1.174	5	-	-	-0.2	-0.1	-0.4	-0.6
62	31	beam	0.266	5	-	-	-	-61.3	-93.2	-43.9
63	25	beam	1.174	5	-	-	-0.2	-0.1	-0.4	-0.6
63	31	beam	0.266	5	-	-	-	-61.3	-93.2	-43.9
64	25	beam	1.174	5	-	-	-0.2	-0.1	-0.4	-0.6
64	31	beam	0.266	5	-	-	-	-61.3	-93.2	-43.9
81	32	-	0.420	5	-	-	-	-40.1	-76.7	-53.9
82	32	-	0.420	5	-	-	-	-40.1	-76.7	-53.9
83	32	-	0.420	5	-	-	-	-40.1	-76.7	-53.9
151	30	beam	0.600	5	-	-	-	-30.2	-61.2	-57.6
151	31	beam	0.268	5	-	-	-	-60.9	-93.0	-44.0
151	25	beam	1.174	5	-	-	-0.2	-0.1	-0.4	-0.6
152	25	beam	1.174	5	-	-	-0.2	-0.1	-0.4	-0.6
152	31	beam	0.266	5	-	-	-	-61.3	-93.2	-43.9
153	25	beam	1.174	5	-	-	-0.2	-0.1	-0.4	-0.6
153	31	beam	0.269	5	-	-	-	-60.6	-92.8	-44.1
153	30	beam	0.600	5	-	-	-	-30.2	-61.2	-57.6

SOFiSTiK AG - www.sofistik.de

Composite bridge 38+50+38, b=14.25m, 2x2HL1100R HISTAR460 , slab 0.30m C30/37

Shrinkage Values *10^-6

Grp	Mno	Type	deff [m]	TS d	CS 47	CS 48	CS 49	total
			Time --->		2693	8123	24494	35310
			RH % --->		80	80	80	
			Temp --->		8	8	8	
11	50	-	0.986	5	-0.5	-0.3	-0.1	-2.35
12	50	-	0.986	5	-0.5	-0.3	-0.1	-2.35
13	50	-	0.986	5	-0.5	-0.3	-0.1	-2.35
14	50	-	0.986	5	-0.5	-0.3	-0.1	-2.35
21	50	beam	1.154	5	-0.6	-0.4	-0.2	-2.35
22	50	beam	1.154	5	-0.6	-0.4	-0.2	-2.35
23	50	beam	1.154	5	-0.6	-0.4	-0.2	-2.35
24	50	beam	1.154	5	-0.6	-0.4	-0.2	-2.35
31	50	-	1.382	5	-0.6	-0.4	-0.2	-2.35
32	50	beam	0.596	5	-0.4	-0.2	-0.1	-2.35
33	50	beam	0.596	5	-0.4	-0.2	-0.1	-2.35
34	50	-	1.382	5	-0.6	-0.4	-0.2	-2.35
51	30	beam	0.600	5	-35.7	-15.7	-5.8	-206.
51	31	beam	0.300	5	-18.6	-6.7	-2.3	-216.
52	30	beam	0.600	5	-35.7	-15.7	-5.8	-206.
52	31	beam	0.300	5	-18.6	-6.7	-2.3	-216.
53	30	beam	0.600	5	-35.7	-15.7	-5.8	-206.
53	31	beam	0.300	5	-18.6	-6.7	-2.3	-216.
61	25	beam	1.174	5	-0.6	-0.4	-0.2	-2.35
61	31	beam	0.266	5	-16.8	-5.9	-2.0	-223.
62	25	beam	1.174	5	-0.6	-0.4	-0.2	-2.35
62	31	beam	0.266	5	-16.8	-5.9	-2.0	-223.
63	25	beam	1.174	5	-0.6	-0.4	-0.2	-2.35
63	31	beam	0.266	5	-16.8	-5.9	-2.0	-223.
64	25	beam	1.174	5	-0.6	-0.4	-0.2	-2.35
64	31	beam	0.266	5	-16.8	-5.9	-2.0	-223.
81	32	-	0.420	5	-26.2	-10.2	-3.6	-211.
82	32	-	0.420	5	-26.2	-10.2	-3.6	-211.
83	32	-	0.420	5	-26.2	-10.2	-3.6	-211.
151	30	beam	0.600	5	-35.7	-15.7	-5.8	-206.
151	31	beam	0.268	5	-16.9	-5.9	-2.0	-223.
151	25	beam	1.174	5	-0.6	-0.4	-0.2	-2.35
152	25	beam	1.174	5	-0.6	-0.4	-0.2	-2.35
152	31	beam	0.266	5	-16.8	-5.9	-2.0	-223.
153	25	beam	1.174	5	-0.6	-0.4	-0.2	-2.35
153	31	beam	0.269	5	-16.9	-6.0	-2.0	-223.
153	30	beam	0.600	5	-35.7	-15.7	-5.8	-206.

In case of TS lower T0, shrinkage from TS-T0 is not taken into account!
(Losses due to shrinkage are calculated starting at time T0)

Overview loadcases. (see also CSM manual chapter 2 loadcases)

```
Total CS displacements and forces starting   at loadcase number. 4000
Difference displacements and forces starting at loadcase number. 5000
AQB inner stresses from creep and shrinkage from loadcasenumber. 6000
Stress results of the AQB-LCST-evaluation   from loadcasenumber. 7000
  [to check prestress normal force after creep and shrinkage :
   -> WINGRAF beam normal force LC 7000ff   see. CTRL STOR 1   ]
+++++ warning no.   143 in program PHIF
 Message: without input to GRP PHIF also spring, boundary and bedding elements cree
 because they are often used for concrete members or soil. Otherwise set GRP PHIF!
+++++ warning no.    63 in program PHI
 At least one delta phi is greater than 0.6. Esspecially in mixed systems of
 beams and piles or beams and quads sufficient creeps steps should be provided.
 Reason: the analysis of creep curvature via AQB differs a litte bit from the
 processing for piles and quads in ASE [GRP PHI]!
```

SOFiSTiK AG - www.sofistik.de

Composite bridge 38+50+38, b=14.25m, 2x2HL1100R HISTAR460 , slab 0.30m C30/37
Obciazenia zmienne

Elementgroups

No	fac-S	fac-L	fac-D	fac-P	fac-B	PLC
11	1.000	1.000	0.000	1.000	1.000	0
12	1.000	1.000	0.000	1.000	1.000	0
13	1.000	1.000	0.000	1.000	1.000	0
14	1.000	1.000	0.000	1.000	1.000	0
21	1.000	1.000	0.000	1.000	1.000	0
22	1.000	1.000	0.000	1.000	1.000	0
23	1.000	1.000	0.000	1.000	1.000	0
24	1.000	1.000	0.000	1.000	1.000	0
31	1.000	1.000	0.000	1.000	1.000	0
32	1.000	1.000	0.000	1.000	1.000	0
33	1.000	1.000	0.000	1.000	1.000	0
34	1.000	1.000	0.000	1.000	1.000	0
41	1.000	1.000	0.000	1.000	1.000	0
42	1.000	1.000	0.000	1.000	1.000	0
43	1.000	1.000	0.000	1.000	1.000	0
44	1.000	1.000	0.000	1.000	1.000	0
50	1.000	1.000	0.000	1.000	1.000	0
51	1.000	1.000	0.000	1.000	1.000	0
52	1.000	1.000	0.000	1.000	1.000	0
53	1.000	1.000	0.000	1.000	1.000	0
61	1.000	1.000	0.000	1.000	1.000	0
62	1.000	1.000	0.000	1.000	1.000	0
63	1.000	1.000	0.000	1.000	1.000	0
64	1.000	1.000	0.000	1.000	1.000	0
71	1.000	1.000	0.000	1.000	1.000	0
72	1.000	1.000	0.000	1.000	1.000	0
73	1.000	1.000	0.000	1.000	1.000	0
74	1.000	1.000	0.000	1.000	1.000	0
81	1.000	1.000	0.000	1.000	1.000	0
82	1.000	1.000	0.000	1.000	1.000	0
83	1.000	1.000	0.000	1.000	1.000	0
111	1.000	1.000	0.000	1.000	1.000	0
112	1.000	1.000	0.000	1.000	1.000	0
113	1.000	1.000	0.000	1.000	1.000	0
114	1.000	1.000	0.000	1.000	1.000	0
151	1.000	1.000	0.000	1.000	1.000	0
152	1.000	1.000	0.000	1.000	1.000	0
153	1.000	1.000	0.000	1.000	1.000	0
191	1.000	1.000	0.000	1.000	1.000	0
192	1.000	1.000	0.000	1.000	1.000	0
193	1.000	1.000	0.000	1.000	1.000	0

Elementgroups activated hinges

no	hinge
11	activ
12	activ
13	activ
14	activ
21	activ
22	activ
23	activ
24	activ
31	activ
32	activ
33	activ
34	activ
41	activ
42	activ
43	activ
44	activ
50	activ
51	fixed
52	fixed
53	fixed

SOFiSTiK AG - www.sofistik.de

Composite bridge 38+50+38, b=14.25m, 2x2HL1100R HISTAR460 , slab 0.30m C30/37
Obciazenia zmienne

Elementgroups activated hinges

no	hinge
61	activ
62	activ
63	activ
64	activ
71	activ
72	activ
73	activ
74	activ
81	activ
82	activ
83	activ
111	activ
112	activ
113	activ
114	activ
151	fixed
152	fixed
153	fixed
191	activ
192	activ
193	activ

The following nodes have been detected to connect beams with wall elements. The adjacent quad elements will get an internal inplane torsional stiffness to transforms the bending moment into pairs of forces on the quad nodes (see CTRL INPL):

1107	1110	1111	1114	1207	1210	1211	1214	2110	2111
2114	2210	2211	2214	3110	3111	3114	3210	3211	3214
4107	4110	4207	4210						

Load Case 5 (G_2) gn

Factor forces and moments	1.000	
unfavourable safety factor	1.350	
favourable safety factor	1.000	
Combination coefficient ψ-0	1.000	(rare)
Combination coefficient ψ-1'	1.000	(non frequent)
Combination coefficient ψ-1	1.000	(frequent)
Combination coefficient ψ-2	1.000	(permanent)

Loads

Kind	Referenceto	Projection W[m]	Coordinates X[m]	Y[m]	Z[m]	Type	Loadvalue	
Area			0.000	-3.125	0.000	PG	6.03	[kN/m2]
			126.000	-3.125	0.000		6.03	[kN/m2]
			126.000	1.575	0.000		6.03	[kN/m2]
			0.000	1.575	0.000		6.03	[kN/m2]
	gar -mult-				activated		100.00	percent
Line			0.000	-3.125	0.000	PG	0.86	[kN/m]
			126.000	-3.125	0.000		0.86	[kN/m]
	gar -mult-				activated		100.00	percent
Line			0.000	1.575	0.000	PG	0.86	[kN/m]
			126.000	1.575	0.000		0.86	[kN/m]
	gar -mult-				activated		100.00	percent
Area			0.000	1.575	0.000	PG	2.62	[kN/m2]
			126.000	1.575	0.000		2.62	[kN/m2]
			126.000	10.175	0.000		2.62	[kN/m2]
			0.000	10.175	0.000		2.62	[kN/m2]
	gar -mult-				activated		100.00	percent
Area			0.000	10.175	0.000	PG	6.03	[kN/m2]
			126.000	10.175	0.000		6.03	[kN/m2]
			126.000	11.125	0.000		6.03	[kN/m2]
			0.000	11.125	0.000		6.03	[kN/m2]
	gar -mult-				activated		100.00	percent
Line			0.000	10.175	0.000	PG	0.86	[kN/m]
			126.000	10.175	0.000		0.86	[kN/m]

SOFiSTiK AG - www.sofistik.de

Composite bridge 38+50+38, b=14.25m, 2x2HL1100R HISTAR460 , slab 0.30m C30/37
Obciazenia zmienne

Loads

Kind	Referenceto	Projection W[m]	Coordinates X[m]	Y[m]	Z[m]	Type	Loadvalue
	gar -mult-				activated		100.00 percent
Line			0.000	11.125	0.000	PG	0.86 [kN/m]
			126.000	11.125	0.000		0.86 [kN/m]
	gar -mult-				activated		100.00 percent

Load Case 6 (G) soil Ka:g

Factor forces and moments 1.000
unfavourable safety factor 1.350
favourable safety factor 1.000
Combination coefficient ψ-0 1.000 (rare)
Combination coefficient ψ-1' 1.000 (non frequent)
Combination coefficient ψ-1 1.000 (frequent)
Combination coefficient ψ-2 1.000 (permanent)

Loads

Kind	Referenceto	Projection W[m]	Coordinates X[m]	Y[m]	Z[m]	Type	Loadvalue
Area			0.000	-3.125	0.000	Pz	0.00 [kN/m2]
			0.000	11.125	0.000		0.00 [kN/m2]
			0.000	11.125	12.000		72.00 [kN/m2]
			0.000	-3.125	12.000		72.00 [kN/m2]
	Gar 1010		(--)		activated		70.42 percent
Area			126.000	-3.125	0.000	Pz	0.00 [kN/m2]
			126.000	11.125	0.000		0.00 [kN/m2]
			126.000	11.125	12.000		-72.00 [kN/m2]
			126.000	-3.125	12.000		-72.00 [kN/m2]
	Gar 4010		(--)		activated		70.42 percent

+++++ warning no. 185 in program ASE/SOFILOAD
LC-no 6 some free loads could not be completely covered,
load near hole or edge - please check SOFILOAD - loadcoordinates and projection

Load Case 11 (Q_1) q2.5-lane1-L

Factor forces and moments 1.000
unfavourable safety factor 1.500
favourable safety factor 0.000
Combination coefficient ψ-0 0.750 (rare)
Combination coefficient ψ-1' 0.800 (non frequent)
Combination coefficient ψ-1 0.750 (frequent)
Combination coefficient ψ-2 0.200 (permanent)

Loads

Kind	Referenceto	Projection W[m]	Coordinates X[m]	Y[m]	Z[m]	Type	Loadvalue
Area			0.000	1.575	0.000	Pz	2.50 [kN/m2]
			38.000	1.575	0.000		2.50 [kN/m2]
			38.000	4.575	0.000		2.50 [kN/m2]
			0.000	4.575	0.000		2.50 [kN/m2]
	gar 1100				activated		100.00 percent

Load Case 12 (Q_1) q2.5-lane2-L

Factor forces and moments 1.000
unfavourable safety factor 1.500
favourable safety factor 0.000
Combination coefficient ψ-0 0.750 (rare)
Combination coefficient ψ-1' 0.800 (non frequent)
Combination coefficient ψ-1 0.750 (frequent)
Combination coefficient ψ-2 0.200 (permanent)

Loads

Kind	Referenceto	Projection W[m]	Coordinates X[m]	Y[m]	Z[m]	Type	Loadvalue
Area			0.000	4.575	0.000	Pz	2.50 [kN/m2]
			38.000	4.575	0.000		2.50 [kN/m2]

SOFiSTiK AG - www.sofistik.de

Composite bridge 38+50+38, b=14.25m, 2x2HL1100R HISTAR460 , slab 0.30m C30/37
Obciazenia zmienne

Loads

Kind	Referenceto	Projection W[m]	Coordinates X[m]	Y[m]	Z[m]	Type	Loadvalue
			38.000	7.575	0.000		2.50 [kN/m2]
			0.000	7.575	0.000		2.50 [kN/m2]
gar	1100				activated		100.00 percent

Load Case 14 (Q_1) q2.5-remain-L

Factor forces and moments	1.000	
unfavourable safety factor	1.500	
favourable safety factor	0.000	
Combination coefficient ψ-0	0.750	(rare)
Combination coefficient ψ-1'	0.800	(non frequent)
Combination coefficient ψ-1	0.750	(frequent)
Combination coefficient ψ-2	0.200	(permanent)

Loads

Kind	Referenceto	Projection W[m]	Coordinates X[m]	Y[m]	Z[m]	Type	Loadvalue
Area			0.000	7.575	0.000	Pz	2.50 [kN/m2]
			38.000	7.575	0.000		2.50 [kN/m2]
			38.000	10.175	0.000		2.50 [kN/m2]
			0.000	10.175	0.000		2.50 [kN/m2]
gar	-mult-				activated		100.00 percent

Load Case 15 (Q_1) deltaq6.5-lane1-L

Factor forces and moments	1.000	
unfavourable safety factor	1.500	
favourable safety factor	0.000	
Combination coefficient ψ-0	0.750	(rare)
Combination coefficient ψ-1'	0.800	(non frequent)
Combination coefficient ψ-1	0.750	(frequent)
Combination coefficient ψ-2	0.200	(permanent)

Loads

Kind	Referenceto	Projection W[m]	Coordinates X[m]	Y[m]	Z[m]	Type	Loadvalue
Area			0.000	1.575	0.000	Pz	6.50 [kN/m2]
			38.000	1.575	0.000		6.50 [kN/m2]
			38.000	4.575	0.000		6.50 [kN/m2]
			0.000	4.575	0.000		6.50 [kN/m2]
gar	1100				activated		100.00 percent

Load Case 16 (Q_1) deltaq6.5-lane2-L

Factor forces and moments	1.000	
unfavourable safety factor	1.500	
favourable safety factor	0.000	
Combination coefficient ψ-0	0.750	(rare)
Combination coefficient ψ-1'	0.800	(non frequent)
Combination coefficient ψ-1	0.750	(frequent)
Combination coefficient ψ-2	0.200	(permanent)

Loads

Kind	Referenceto	Projection W[m]	Coordinates X[m]	Y[m]	Z[m]	Type	Loadvalue
Area			0.000	4.575	0.000	Pz	6.50 [kN/m2]
			38.000	4.575	0.000		6.50 [kN/m2]
			38.000	7.575	0.000		6.50 [kN/m2]
			0.000	7.575	0.000		6.50 [kN/m2]
gar	1100				activated		100.00 percent

SOFiSTiK AG - www.sofistik.de

Composite bridge 38+50+38, b=14.25m, 2x2HL1100R HISTAR460 , slab 0.30m C30/37
Obciazenia zmienne

Load Case 18 (Q_1) pedstrian-L

Factor forces and moments	1.000	
unfavourable safety factor	1.500	
favourable safety factor	0.000	
Combination coefficient ψ-0	0.750	(rare)
Combination coefficient ψ-1'	0.800	(non frequent)
Combination coefficient ψ-1	0.750	(frequent)
Combination coefficient ψ-2	0.200	(permanent)

Loads

Kind	Referenceto	Projection W[m]	Coordinates X[m]	Y[m]	Z[m]	Type	Loadvalue
Area			0.000	-3.125	0.000	Pz	3.00 [kN/m2]
			38.000	-3.125	0.000		3.00 [kN/m2]
			38.000	1.575	0.000		3.00 [kN/m2]
			0.000	1.575	0.000		3.00 [kN/m2]
	gar -mult-				activated		100.00 percent

Load Case 19 (Q_1) pedstrian-R

Factor forces and moments	1.000	
unfavourable safety factor	1.500	
favourable safety factor	0.000	
Combination coefficient ψ-0	0.750	(rare)
Combination coefficient ψ-1'	0.800	(non frequent)
Combination coefficient ψ-1	0.750	(frequent)
Combination coefficient ψ-2	0.200	(permanent)

Loads

Kind	Referenceto	Projection W[m]	Coordinates X[m]	Y[m]	Z[m]	Type	Loadvalue
Area			0.000	10.175	0.000	Pz	3.00 [kN/m2]
			38.000	10.175	0.000		3.00 [kN/m2]
			38.000	11.125	0.000		3.00 [kN/m2]
			0.000	11.125	0.000		3.00 [kN/m2]
	gar 1900				activated		100.00 percent

Load Case 21 (Q_1) q2.5-lane1-L

Factor forces and moments	1.000	
unfavourable safety factor	1.500	
favourable safety factor	0.000	
Combination coefficient ψ-0	0.750	(rare)
Combination coefficient ψ-1'	0.800	(non frequent)
Combination coefficient ψ-1	0.750	(frequent)
Combination coefficient ψ-2	0.200	(permanent)

Loads

Kind	Referenceto	Projection W[m]	Coordinates X[m]	Y[m]	Z[m]	Type	Loadvalue
Area			38.000	1.575	0.000	Pz	2.50 [kN/m2]
			88.000	1.575	0.000		2.50 [kN/m2]
			88.000	4.575	0.000		2.50 [kN/m2]
			38.000	4.575	0.000		2.50 [kN/m2]
	gar 2100				activated		100.00 percent

Load Case 22 (Q_1) q2.5-lane2-L

Factor forces and moments	1.000	
unfavourable safety factor	1.500	
favourable safety factor	0.000	
Combination coefficient ψ-0	0.750	(rare)
Combination coefficient ψ-1'	0.800	(non frequent)
Combination coefficient ψ-1	0.750	(frequent)
Combination coefficient ψ-2	0.200	(permanent)

SOFiSTiK AG - www.sofistik.de

Composite bridge 38+50+38, b=14.25m, 2x2HL1100R HISTAR460 , slab 0.30m C30/37
Obciazenia zmienne

Loads

Kind	Referenceto	Projection W[m]	Coordinates X[m]	Y[m]	Z[m]	Type	Loadvalue
Area			38.000	4.575	0.000	Pz	2.50 [kN/m2]
			88.000	4.575	0.000		2.50 [kN/m2]
			88.000	7.575	0.000		2.50 [kN/m2]
			38.000	7.575	0.000		2.50 [kN/m2]
	gar	2100			activated		100.00 percent

Load Case 24 (Q_1) q2.5-remain-L

Factor forces and moments	1.000	
unfavourable safety factor	1.500	
favourable safety factor	0.000	
Combination coefficient ψ-0	0.750	(rare)
Combination coefficient ψ-1'	0.800	(non frequent)
Combination coefficient ψ-1	0.750	(frequent)
Combination coefficient ψ-2	0.200	(permanent)

Loads

Kind	Referenceto	Projection W[m]	Coordinates X[m]	Y[m]	Z[m]	Type	Loadvalue
Area			38.000	7.575	0.000	Pz	2.50 [kN/m2]
			88.000	7.575	0.000		2.50 [kN/m2]
			88.000	10.175	0.000		2.50 [kN/m2]
			38.000	10.175	0.000		2.50 [kN/m2]
	gar	-mult-			activated		100.00 percent

Load Case 25 (Q_1) deltaq6.5-lane1-L

Factor forces and moments	1.000	
unfavourable safety factor	1.500	
favourable safety factor	0.000	
Combination coefficient ψ-0	0.750	(rare)
Combination coefficient ψ-1'	0.800	(non frequent)
Combination coefficient ψ-1	0.750	(frequent)
Combination coefficient ψ-2	0.200	(permanent)

Loads

Kind	Referenceto	Projection W[m]	Coordinates X[m]	Y[m]	Z[m]	Type	Loadvalue
Area			38.000	1.575	0.000	Pz	6.50 [kN/m2]
			88.000	1.575	0.000		6.50 [kN/m2]
			88.000	4.575	0.000		6.50 [kN/m2]
			38.000	4.575	0.000		6.50 [kN/m2]
	gar	2100			activated		100.00 percent

Load Case 26 (Q_1) deltaq6.5-lane2-L

Factor forces and moments	1.000	
unfavourable safety factor	1.500	
favourable safety factor	0.000	
Combination coefficient ψ-0	0.750	(rare)
Combination coefficient ψ-1'	0.800	(non frequent)
Combination coefficient ψ-1	0.750	(frequent)
Combination coefficient ψ-2	0.200	(permanent)

Loads

Kind	Referenceto	Projection W[m]	Coordinates X[m]	Y[m]	Z[m]	Type	Loadvalue
Area			38.000	4.575	0.000	Pz	6.50 [kN/m2]
			88.000	4.575	0.000		6.50 [kN/m2]
			88.000	7.575	0.000		6.50 [kN/m2]
			38.000	7.575	0.000		6.50 [kN/m2]
	gar	2100			activated		100.00 percent

SOFiSTiK AG - www.sofistik.de

Composite bridge 38+50+38, b=14.25m, 2x2HL1100R HISTAR460 , slab 0.30m C30/37
Obciazenia zmienne

Load Case 28 (Q_1) pedstrian-L

Factor forces and moments	1.000	
unfavourable safety factor	1.500	
favourable safety factor	0.000	
Combination coefficient ψ-0	0.750	(rare)
Combination coefficient ψ-1'	0.800	(non frequent)
Combination coefficient ψ-1	0.750	(frequent)
Combination coefficient ψ-2	0.200	(permanent)

Loads

Kind	Referenceto	Projection W[m]	Coordinates X[m]	Y[m]	Z[m]	Type	Loadvalue
Area			38.000	-3.125	0.000	Pz	3.00 [kN/m2]
			88.000	-3.125	0.000		3.00 [kN/m2]
			88.000	1.575	0.000		3.00 [kN/m2]
			38.000	1.575	0.000		3.00 [kN/m2]
	gar -mult-				activated		100.00 percent

Load Case 29 (Q_1) pedstrian-R

Factor forces and moments	1.000	
unfavourable safety factor	1.500	
favourable safety factor	0.000	
Combination coefficient ψ-0	0.750	(rare)
Combination coefficient ψ-1'	0.800	(non frequent)
Combination coefficient ψ-1	0.750	(frequent)
Combination coefficient ψ-2	0.200	(permanent)

Loads

Kind	Referenceto	Projection W[m]	Coordinates X[m]	Y[m]	Z[m]	Type	Loadvalue
Area			38.000	10.175	0.000	Pz	3.00 [kN/m2]
			88.000	10.175	0.000		3.00 [kN/m2]
			88.000	11.125	0.000		3.00 [kN/m2]
			38.000	11.125	0.000		3.00 [kN/m2]
	gar 2900				activated		100.00 percent

Load Case 31 (Q_1) q2.5-lane1-L

Factor forces and moments	1.000	
unfavourable safety factor	1.500	
favourable safety factor	0.000	
Combination coefficient ψ-0	0.750	(rare)
Combination coefficient ψ-1'	0.800	(non frequent)
Combination coefficient ψ-1	0.750	(frequent)
Combination coefficient ψ-2	0.200	(permanent)

Loads

Kind	Referenceto	Projection W[m]	Coordinates X[m]	Y[m]	Z[m]	Type	Loadvalue
Area			88.000	1.575	0.000	Pz	2.50 [kN/m2]
			126.000	1.575	0.000		2.50 [kN/m2]
			126.000	4.575	0.000		2.50 [kN/m2]
			88.000	4.575	0.000		2.50 [kN/m2]
	gar 3100				activated		100.00 percent

Load Case 32 (Q_1) q2.5-lane2-L

Factor forces and moments	1.000	
unfavourable safety factor	1.500	
favourable safety factor	0.000	
Combination coefficient ψ-0	0.750	(rare)
Combination coefficient ψ-1'	0.800	(non frequent)
Combination coefficient ψ-1	0.750	(frequent)
Combination coefficient ψ-2	0.200	(permanent)

SOFiSTiK AG - www.sofistik.de

Composite bridge 38+50+38, b=14.25m, 2x2HL1100R HISTAR460 , slab 0.30m C30/37
Obciazenia zmienne

Loads

Kind	Referenceto	Projection W[m]	Coordinates X[m]	Y[m]	Z[m]	Type	Loadvalue
Area			88.000	4.575	0.000	Pz	2.50 [kN/m2]
			126.000	4.575	0.000		2.50 [kN/m2]
			126.000	7.575	0.000		2.50 [kN/m2]
			88.000	7.575	0.000		2.50 [kN/m2]
	gar	3100			activated		100.00 percent

Load Case 34 (Q_1) q2.5-remain-L

Factor forces and moments	1.000	
unfavourable safety factor	1.500	
favourable safety factor	0.000	
Combination coefficient ψ-0	0.750	(rare)
Combination coefficient ψ-1'	0.800	(non frequent)
Combination coefficient ψ-1	0.750	(frequent)
Combination coefficient ψ-2	0.200	(permanent)

Loads

Kind	Referenceto	Projection W[m]	Coordinates X[m]	Y[m]	Z[m]	Type	Loadvalue
Area			88.000	7.575	0.000	Pz	2.50 [kN/m2]
			126.000	7.575	0.000		2.50 [kN/m2]
			126.000	10.175	0.000		2.50 [kN/m2]
			88.000	10.175	0.000		2.50 [kN/m2]
	gar	-mult-			activated		100.00 percent

Load Case 35 (Q_1) deltaq6.5-lane1-L

Factor forces and moments	1.000	
unfavourable safety factor	1.500	
favourable safety factor	0.000	
Combination coefficient ψ-0	0.750	(rare)
Combination coefficient ψ-1'	0.800	(non frequent)
Combination coefficient ψ-1	0.750	(frequent)
Combination coefficient ψ-2	0.200	(permanent)

Loads

Kind	Referenceto	Projection W[m]	Coordinates X[m]	Y[m]	Z[m]	Type	Loadvalue
Area			88.000	1.575	0.000	Pz	6.50 [kN/m2]
			126.000	1.575	0.000		6.50 [kN/m2]
			126.000	4.575	0.000		6.50 [kN/m2]
			88.000	4.575	0.000		6.50 [kN/m2]
	gar	3100			activated		100.00 percent

Load Case 36 (Q_1) deltaq6.5-lane2-L

Factor forces and moments	1.000	
unfavourable safety factor	1.500	
favourable safety factor	0.000	
Combination coefficient ψ-0	0.750	(rare)
Combination coefficient ψ-1'	0.800	(non frequent)
Combination coefficient ψ-1	0.750	(frequent)
Combination coefficient ψ-2	0.200	(permanent)

Loads

Kind	Referenceto	Projection W[m]	Coordinates X[m]	Y[m]	Z[m]	Type	Loadvalue
Area			88.000	4.575	0.000	Pz	6.50 [kN/m2]
			126.000	4.575	0.000		6.50 [kN/m2]
			126.000	7.575	0.000		6.50 [kN/m2]
			88.000	7.575	0.000		6.50 [kN/m2]
	gar	3100			activated		100.00 percent

SOFiSTiK AG - www.sofistik.de

Composite bridge 38+50+38, b=14.25m, 2x2HL1100R HISTAR460 , slab 0.30m C30/37
Obciazenia zmienne

Load Case 38 (Q_1) pedstrian-L

Factor forces and moments	1.000	
unfavourable safety factor	1.500	
favourable safety factor	0.000	
Combination coefficient ψ-0	0.750	(rare)
Combination coefficient ψ-1'	0.800	(non frequent)
Combination coefficient ψ-1	0.750	(frequent)
Combination coefficient ψ-2	0.200	(permanent)

Loads

Kind	Referenceto	Projection W[m]	Coordinates X[m]	Y[m]	Z[m]	Type	Loadvalue
Area			88.000	-3.125	0.000	Pz	3.00 [kN/m2]
			126.000	-3.125	0.000		3.00 [kN/m2]
			126.000	1.575	0.000		3.00 [kN/m2]
			88.000	1.575	0.000		3.00 [kN/m2]
	gar -mult-				activated		100.00 percent

Load Case 39 (Q_1) pedstrian-R

Factor forces and moments	1.000	
unfavourable safety factor	1.500	
favourable safety factor	0.000	
Combination coefficient ψ-0	0.750	(rare)
Combination coefficient ψ-1'	0.800	(non frequent)
Combination coefficient ψ-1	0.750	(frequent)
Combination coefficient ψ-2	0.200	(permanent)

Loads

Kind	Referenceto	Projection W[m]	Coordinates X[m]	Y[m]	Z[m]	Type	Loadvalue
Area			88.000	10.175	0.000	Pz	3.00 [kN/m2]
			126.000	10.175	0.000		3.00 [kN/m2]
			126.000	11.125	0.000		3.00 [kN/m2]
			88.000	11.125	0.000		3.00 [kN/m2]
	gar 3900				activated		100.00 percent

Load Case 110 (L_1) K-EN-L

Factor forces and moments	1.000	
unfavourable safety factor	1.500	
favourable safety factor	0.000	
Combination coefficient ψ-0	0.750	(rare)
Combination coefficient ψ-1'	0.800	(non frequent)
Combination coefficient ψ-1	0.750	(frequent)
Combination coefficient ψ-2	0.200	(permanent)

Loads

Kind	Referenceto	Projection W[m]	Coordinates X[m]	Y[m]	Z[m]	Type	Loadvalue
Point			-0.600	2.075	0.000	PG	50.0 [kN]
	auto ????		(--)		activated		0.00 percent
Point			0.600	2.075	0.000	PG	50.0 [kN]
	gar 1100				activated		100.00 percent
Point			-0.600	4.075	0.000	PG	50.0 [kN]
	auto ????		(--)		activated		0.00 percent
Point			0.600	4.075	0.000	PG	50.0 [kN]
	gar 1100				activated		100.00 percent

+++++ warning no. 185 in program ASE/SOFILOAD
LC-no 110 some free loads could not be completely covered,
load near hole or edge - please check SOFILOAD - loadcoordinates and projection

SOFiSTiK AG - www.sofistik.de

Composite bridge 38+50+38, b=14.25m, 2x2HL1100R HISTAR460 , slab 0.30m C30/37
Obciazenia zmienne

Load Case 111 (L_1) K-EN-L

Factor forces and moments	1.000	
unfavourable safety factor	1.500	
favourable safety factor	0.000	
Combination coefficient ψ-0	0.750	(rare)
Combination coefficient ψ-1'	0.800	(non frequent)
Combination coefficient ψ-1	0.750	(frequent)
Combination coefficient ψ-2	0.200	(permanent)

Loads

Kind	Referenceto	Projection W[m]	Coordinates X[m]	Y[m]	Z[m]	Type	Loadvalue
Point			3.622	2.075	0.000	PG	50.0 [kN]
	gar 1100				activated		100.00 percent
Point			4.822	2.075	0.000	PG	50.0 [kN]
	gar 1100				activated		100.00 percent
Point			3.622	4.075	0.000	PG	50.0 [kN]
	gar 1100				activated		100.00 percent
Point			4.822	4.075	0.000	PG	50.0 [kN]
	gar 1100				activated		100.00 percent

Load Case 112 (L_1) K-EN-L

Factor forces and moments	1.000	
unfavourable safety factor	1.500	
favourable safety factor	0.000	
Combination coefficient ψ-0	0.750	(rare)
Combination coefficient ψ-1'	0.800	(non frequent)
Combination coefficient ψ-1	0.750	(frequent)
Combination coefficient ψ-2	0.200	(permanent)

Loads

Kind	Referenceto	Projection W[m]	Coordinates X[m]	Y[m]	Z[m]	Type	Loadvalue
Point			7.844	2.075	0.000	PG	50.0 [kN]
	gar 1100				activated		100.00 percent
Point			9.044	2.075	0.000	PG	50.0 [kN]
	gar 1100				activated		100.00 percent
Point			7.844	4.075	0.000	PG	50.0 [kN]
	gar 1100				activated		100.00 percent
Point			9.044	4.075	0.000	PG	50.0 [kN]
	gar 1100				activated		100.00 percent

Load Case 113 (L_1) K-EN-L

Factor forces and moments	1.000	
unfavourable safety factor	1.500	
favourable safety factor	0.000	
Combination coefficient ψ-0	0.750	(rare)
Combination coefficient ψ-1'	0.800	(non frequent)
Combination coefficient ψ-1	0.750	(frequent)
Combination coefficient ψ-2	0.200	(permanent)

Loads

Kind	Referenceto	Projection W[m]	Coordinates X[m]	Y[m]	Z[m]	Type	Loadvalue
Point			12.067	2.075	0.000	PG	50.0 [kN]
	gar 1100				activated		100.00 percent
Point			13.267	2.075	0.000	PG	50.0 [kN]
	gar 1100				activated		100.00 percent
Point			12.067	4.075	0.000	PG	50.0 [kN]
	gar 1100				activated		100.00 percent
Point			13.267	4.075	0.000	PG	50.0 [kN]
	gar 1100				activated		100.00 percent

SOFiSTiK AG - www.sofistik.de

Composite bridge 38+50+38, b=14.25m, 2x2HL1100R HISTAR460 , slab 0.30m C30/37
Obciazenia zmienne

Load Case 114 (L_1) K-EN-L

Factor forces and moments	1.000	
unfavourable safety factor	1.500	
favourable safety factor	0.000	
Combination coefficient ψ-0	0.750	(rare)
Combination coefficient ψ-1'	0.800	(non frequent)
Combination coefficient ψ-1	0.750	(frequent)
Combination coefficient ψ-2	0.200	(permanent)

Loads

Kind	Referenceto	Projection W[m]	Coordinates X[m]	Y[m]	Z[m]	Type	Loadvalue
Point			16.289	2.075	0.000	PG	50.0 [kN]
	gar	1100			activated		100.00 percent
Point			17.489	2.075	0.000	PG	50.0 [kN]
	gar	1100			activated		100.00 percent
Point			16.289	4.075	0.000	PG	50.0 [kN]
	gar	1100			activated		100.00 percent
Point			17.489	4.075	0.000	PG	50.0 [kN]
	gar	1100			activated		100.00 percent

Load Case 115 (L_1) K-EN-L

Factor forces and moments	1.000	
unfavourable safety factor	1.500	
favourable safety factor	0.000	
Combination coefficient ψ-0	0.750	(rare)
Combination coefficient ψ-1'	0.800	(non frequent)
Combination coefficient ψ-1	0.750	(frequent)
Combination coefficient ψ-2	0.200	(permanent)

Loads

Kind	Referenceto	Projection W[m]	Coordinates X[m]	Y[m]	Z[m]	Type	Loadvalue
Point			20.511	2.075	0.000	PG	50.0 [kN]
	gar	1100			activated		100.00 percent
Point			21.711	2.075	0.000	PG	50.0 [kN]
	gar	1100			activated		100.00 percent
Point			20.511	4.075	0.000	PG	50.0 [kN]
	gar	1100			activated		100.00 percent
Point			21.711	4.075	0.000	PG	50.0 [kN]
	gar	1100			activated		100.00 percent

Load Case 116 (L_1) K-EN-L

Factor forces and moments	1.000	
unfavourable safety factor	1.500	
favourable safety factor	0.000	
Combination coefficient ψ-0	0.750	(rare)
Combination coefficient ψ-1'	0.800	(non frequent)
Combination coefficient ψ-1	0.750	(frequent)
Combination coefficient ψ-2	0.200	(permanent)

Loads

Kind	Referenceto	Projection W[m]	Coordinates X[m]	Y[m]	Z[m]	Type	Loadvalue
Point			24.733	2.075	0.000	PG	50.0 [kN]
	gar	1100			activated		100.00 percent
Point			25.933	2.075	0.000	PG	50.0 [kN]
	gar	1100			activated		100.00 percent
Point			24.733	4.075	0.000	PG	50.0 [kN]
	gar	1100			activated		100.00 percent
Point			25.933	4.075	0.000	PG	50.0 [kN]
	gar	1100			activated		100.00 percent

SOFiSTiK AG - www.sofistik.de

Composite bridge 38+50+38, b=14.25m, 2x2HL1100R HISTAR460 , slab 0.30m C30/37
Obciazenia zmienne

Load Case 117 (L_1) K-EN-L

Factor forces and moments	1.000	
unfavourable safety factor	1.500	
favourable safety factor	0.000	
Combination coefficient ψ-0	0.750	(rare)
Combination coefficient ψ-1'	0.800	(non frequent)
Combination coefficient ψ-1	0.750	(frequent)
Combination coefficient ψ-2	0.200	(permanent)

Loads

Kind	Referenceto	Projection W[m]	Coordinates X[m]	Y[m]	Z[m]	Type	Loadvalue
Point			28.956	2.075	0.000	PG	50.0 [kN]
	gar 1100				activated		100.00 percent
Point			30.156	2.075	0.000	PG	50.0 [kN]
	gar 1100				activated		100.00 percent
Point			28.956	4.075	0.000	PG	50.0 [kN]
	gar 1100				activated		100.00 percent
Point			30.156	4.075	0.000	PG	50.0 [kN]
	gar 1100				activated		100.00 percent

Load Case 118 (L_1) K-EN-L

Factor forces and moments	1.000	
unfavourable safety factor	1.500	
favourable safety factor	0.000	
Combination coefficient ψ-0	0.750	(rare)
Combination coefficient ψ-1'	0.800	(non frequent)
Combination coefficient ψ-1	0.750	(frequent)
Combination coefficient ψ-2	0.200	(permanent)

Loads

Kind	Referenceto	Projection W[m]	Coordinates X[m]	Y[m]	Z[m]	Type	Loadvalue
Point			33.178	2.075	0.000	PG	50.0 [kN]
	gar 1100				activated		100.00 percent
Point			34.378	2.075	0.000	PG	50.0 [kN]
	gar 1100				activated		100.00 percent
Point			33.178	4.075	0.000	PG	50.0 [kN]
	gar 1100				activated		100.00 percent
Point			34.378	4.075	0.000	PG	50.0 [kN]
	gar 1100				activated		100.00 percent

Load Case 119 (L_1) K-EN-L

Factor forces and moments	1.000	
unfavourable safety factor	1.500	
favourable safety factor	0.000	
Combination coefficient ψ-0	0.750	(rare)
Combination coefficient ψ-1'	0.800	(non frequent)
Combination coefficient ψ-1	0.750	(frequent)
Combination coefficient ψ-2	0.200	(permanent)

Loads

Kind	Referenceto	Projection W[m]	Coordinates X[m]	Y[m]	Z[m]	Type	Loadvalue
Point			37.400	2.075	0.000	PG	50.0 [kN]
	gar 1100				activated		100.00 percent
Point			38.600	2.075	0.000	PG	50.0 [kN]
	gar 2100				activated		100.00 percent
Point			37.400	4.075	0.000	PG	50.0 [kN]
	gar 1100				activated		100.00 percent
Point			38.600	4.075	0.000	PG	50.0 [kN]
	gar 2100				activated		100.00 percent

SOFiSTiK AG - www.sofistik.de

Composite bridge 38+50+38, b=14.25m, 2x2HL1100R HISTAR460 , slab 0.30m C30/37
Obciazenia zmienne

Load Case 120 (L_1) K-EN-L

Factor forces and moments	1.000	
unfavourable safety factor	1.500	
favourable safety factor	0.000	
Combination coefficient ψ-0	0.750	(rare)
Combination coefficient ψ-1'	0.800	(non frequent)
Combination coefficient ψ-1	0.750	(frequent)
Combination coefficient ψ-2	0.200	(permanent)

Loads

Kind	Referenceto	Projection W[m]	Coordinates X[m]	Y[m]	Z[m]	Type	Loadvalue
Point			37.400	2.075	0.000	PG	50.0 [kN]
	gar 1100				activated		100.00 percent
Point			38.600	2.075	0.000	PG	50.0 [kN]
	gar 2100				activated		100.00 percent
Point			37.400	4.075	0.000	PG	50.0 [kN]
	gar 1100				activated		100.00 percent
Point			38.600	4.075	0.000	PG	50.0 [kN]
	gar 2100				activated		100.00 percent

Load Case 121 (L_1) K-EN-L

Factor forces and moments	1.000	
unfavourable safety factor	1.500	
favourable safety factor	0.000	
Combination coefficient ψ-0	0.750	(rare)
Combination coefficient ψ-1'	0.800	(non frequent)
Combination coefficient ψ-1	0.750	(frequent)
Combination coefficient ψ-2	0.200	(permanent)

Loads

Kind	Referenceto	Projection W[m]	Coordinates X[m]	Y[m]	Z[m]	Type	Loadvalue
Point			42.956	2.075	0.000	PG	50.0 [kN]
	gar 2100				activated		100.00 percent
Point			44.156	2.075	0.000	PG	50.0 [kN]
	gar 2100				activated		100.00 percent
Point			42.956	4.075	0.000	PG	50.0 [kN]
	gar 2100				activated		100.00 percent
Point			44.156	4.075	0.000	PG	50.0 [kN]
	gar 2100				activated		100.00 percent

Load Case 122 (L_1) K-EN-L

Factor forces and moments	1.000	
unfavourable safety factor	1.500	
favourable safety factor	0.000	
Combination coefficient ψ-0	0.750	(rare)
Combination coefficient ψ-1'	0.800	(non frequent)
Combination coefficient ψ-1	0.750	(frequent)
Combination coefficient ψ-2	0.200	(permanent)

Loads

Kind	Referenceto	Projection W[m]	Coordinates X[m]	Y[m]	Z[m]	Type	Loadvalue
Point			48.511	2.075	0.000	PG	50.0 [kN]
	gar 2100				activated		100.00 percent
Point			49.711	2.075	0.000	PG	50.0 [kN]
	gar 2100				activated		100.00 percent
Point			48.511	4.075	0.000	PG	50.0 [kN]
	gar 2100				activated		100.00 percent
Point			49.711	4.075	0.000	PG	50.0 [kN]
	gar 2100				activated		100.00 percent

SOFiSTiK AG - www.sofistik.de

Composite bridge 38+50+38, b=14.25m, 2x2HL1100R HISTAR460 , slab 0.30m C30/37
Obciazenia zmienne

Load Case 123 (L_1) K-EN-L

Factor forces and moments	1.000	
unfavourable safety factor	1.500	
favourable safety factor	0.000	
Combination coefficient ψ-0	0.750	(rare)
Combination coefficient ψ-1'	0.800	(non frequent)
Combination coefficient ψ-1	0.750	(frequent)
Combination coefficient ψ-2	0.200	(permanent)

Loads

Kind	Referenceto	Projection W[m]	Coordinates X[m]	Y[m]	Z[m]	Type	Loadvalue
Point			54.067	2.075	0.000	PG	50.0 [kN]
	gar	2100			activated		100.00 percent
Point			55.267	2.075	0.000	PG	50.0 [kN]
	gar	2100			activated		100.00 percent
Point			54.067	4.075	0.000	PG	50.0 [kN]
	gar	2100			activated		100.00 percent
Point			55.267	4.075	0.000	PG	50.0 [kN]
	gar	2100			activated		100.00 percent

Load Case 124 (L_1) K-EN-L

Factor forces and moments	1.000	
unfavourable safety factor	1.500	
favourable safety factor	0.000	
Combination coefficient ψ-0	0.750	(rare)
Combination coefficient ψ-1'	0.800	(non frequent)
Combination coefficient ψ-1	0.750	(frequent)
Combination coefficient ψ-2	0.200	(permanent)

Loads

Kind	Referenceto	Projection W[m]	Coordinates X[m]	Y[m]	Z[m]	Type	Loadvalue
Point			59.622	2.075	0.000	PG	50.0 [kN]
	gar	2100			activated		100.00 percent
Point			60.822	2.075	0.000	PG	50.0 [kN]
	gar	2100			activated		100.00 percent
Point			59.622	4.075	0.000	PG	50.0 [kN]
	gar	2100			activated		100.00 percent
Point			60.822	4.075	0.000	PG	50.0 [kN]
	gar	2100			activated		100.00 percent

Load Case 125 (L_1) K-EN-L

Factor forces and moments	1.000	
unfavourable safety factor	1.500	
favourable safety factor	0.000	
Combination coefficient ψ-0	0.750	(rare)
Combination coefficient ψ-1'	0.800	(non frequent)
Combination coefficient ψ-1	0.750	(frequent)
Combination coefficient ψ-2	0.200	(permanent)

Loads

Kind	Referenceto	Projection W[m]	Coordinates X[m]	Y[m]	Z[m]	Type	Loadvalue
Point			65.178	2.075	0.000	PG	50.0 [kN]
	gar	2100			activated		100.00 percent
Point			66.378	2.075	0.000	PG	50.0 [kN]
	gar	2100			activated		100.00 percent
Point			65.178	4.075	0.000	PG	50.0 [kN]
	gar	2100			activated		100.00 percent
Point			66.378	4.075	0.000	PG	50.0 [kN]
	gar	2100			activated		100.00 percent

SOFiSTiK AG - www.sofistik.de

Composite bridge 38+50+38, b=14.25m, 2x2HL1100R HISTAR460 , slab 0.30m C30/37
Obciazenia zmienne

Load Case 126 (L_1) K-EN-L

Factor forces and moments	1.000	
unfavourable safety factor	1.500	
favourable safety factor	0.000	
Combination coefficient ψ-0	0.750	(rare)
Combination coefficient ψ-1'	0.800	(non frequent)
Combination coefficient ψ-1	0.750	(frequent)
Combination coefficient ψ-2	0.200	(permanent)

Loads

Kind	Referenceto	Projection W[m]	Coordinates X[m]	Y[m]	Z[m]	Type	Loadvalue
Point			70.733	2.075	0.000	PG	50.0 [kN]
	gar	2100			activated		100.00 percent
Point			71.933	2.075	0.000	PG	50.0 [kN]
	gar	2100			activated		100.00 percent
Point			70.733	4.075	0.000	PG	50.0 [kN]
	gar	2100			activated		100.00 percent
Point			71.933	4.075	0.000	PG	50.0 [kN]
	gar	2100			activated		100.00 percent

Load Case 127 (L_1) K-EN-L

Factor forces and moments	1.000	
unfavourable safety factor	1.500	
favourable safety factor	0.000	
Combination coefficient ψ-0	0.750	(rare)
Combination coefficient ψ-1'	0.800	(non frequent)
Combination coefficient ψ-1	0.750	(frequent)
Combination coefficient ψ-2	0.200	(permanent)

Loads

Kind	Referenceto	Projection W[m]	Coordinates X[m]	Y[m]	Z[m]	Type	Loadvalue
Point			76.289	2.075	0.000	PG	50.0 [kN]
	gar	2100			activated		100.00 percent
Point			77.489	2.075	0.000	PG	50.0 [kN]
	gar	2100			activated		100.00 percent
Point			76.289	4.075	0.000	PG	50.0 [kN]
	gar	2100			activated		100.00 percent
Point			77.489	4.075	0.000	PG	50.0 [kN]
	gar	2100			activated		100.00 percent

Load Case 128 (L_1) K-EN-L

Factor forces and moments	1.000	
unfavourable safety factor	1.500	
favourable safety factor	0.000	
Combination coefficient ψ-0	0.750	(rare)
Combination coefficient ψ-1'	0.800	(non frequent)
Combination coefficient ψ-1	0.750	(frequent)
Combination coefficient ψ-2	0.200	(permanent)

Loads

Kind	Referenceto	Projection W[m]	Coordinates X[m]	Y[m]	Z[m]	Type	Loadvalue
Point			81.844	2.075	0.000	PG	50.0 [kN]
	gar	2100			activated		100.00 percent
Point			83.044	2.075	0.000	PG	50.0 [kN]
	gar	2100			activated		100.00 percent
Point			81.844	4.075	0.000	PG	50.0 [kN]
	gar	2100			activated		100.00 percent
Point			83.044	4.075	0.000	PG	50.0 [kN]
	gar	2100			activated		100.00 percent

SOFiSTiK AG - www.sofistik.de

Composite bridge 38+50+38, b=14.25m, 2x2HL1100R HISTAR460 , slab 0.30m C30/37
Obciazenia zmienne

Load Case 129 (L_1) K-EN-L

Factor forces and moments	1.000	
unfavourable safety factor	1.500	
favourable safety factor	0.000	
Combination coefficient ψ-0	0.750	(rare)
Combination coefficient ψ-1'	0.800	(non frequent)
Combination coefficient ψ-1	0.750	(frequent)
Combination coefficient ψ-2	0.200	(permanent)

Loads

Kind	Referenceto	Projection W[m]	Coordinates X[m]	Y[m]	Z[m]	Type	Loadvalue
Point			87.400	2.075	0.000	PG	50.0 [kN]
	gar	2100			activated		100.00 percent
Point			88.600	2.075	0.000	PG	50.0 [kN]
	gar	3100			activated		100.00 percent
Point			87.400	4.075	0.000	PG	50.0 [kN]
	gar	2100			activated		100.00 percent
Point			88.600	4.075	0.000	PG	50.0 [kN]
	gar	3100			activated		100.00 percent

Load Case 130 (L_1) K-EN-L

Factor forces and moments	1.000	
unfavourable safety factor	1.500	
favourable safety factor	0.000	
Combination coefficient ψ-0	0.750	(rare)
Combination coefficient ψ-1'	0.800	(non frequent)
Combination coefficient ψ-1	0.750	(frequent)
Combination coefficient ψ-2	0.200	(permanent)

Loads

Kind	Referenceto	Projection W[m]	Coordinates X[m]	Y[m]	Z[m]	Type	Loadvalue
Point			87.400	2.075	0.000	PG	50.0 [kN]
	gar	2100			activated		100.00 percent
Point			88.600	2.075	0.000	PG	50.0 [kN]
	gar	3100			activated		100.00 percent
Point			87.400	4.075	0.000	PG	50.0 [kN]
	gar	2100			activated		100.00 percent
Point			88.600	4.075	0.000	PG	50.0 [kN]
	gar	3100			activated		100.00 percent

Load Case 131 (L_1) K-EN-L

Factor forces and moments	1.000	
unfavourable safety factor	1.500	
favourable safety factor	0.000	
Combination coefficient ψ-0	0.750	(rare)
Combination coefficient ψ-1'	0.800	(non frequent)
Combination coefficient ψ-1	0.750	(frequent)
Combination coefficient ψ-2	0.200	(permanent)

Loads

Kind	Referenceto	Projection W[m]	Coordinates X[m]	Y[m]	Z[m]	Type	Loadvalue
Point			91.622	2.075	0.000	PG	50.0 [kN]
	gar	3100			activated		100.00 percent
Point			92.822	2.075	0.000	PG	50.0 [kN]
	gar	3100			activated		100.00 percent
Point			91.622	4.075	0.000	PG	50.0 [kN]
	gar	3100			activated		100.00 percent
Point			92.822	4.075	0.000	PG	50.0 [kN]
	gar	3100			activated		100.00 percent

SOFiSTiK AG - www.sofistik.de

Composite bridge 38+50+38, b=14.25m, 2x2HL1100R HISTAR460 , slab 0.30m C30/37
Obciazenia zmienne

Load Case 132 (L_1) K-EN-L

Factor forces and moments	1.000	
unfavourable safety factor	1.500	
favourable safety factor	0.000	
Combination coefficient ψ-0	0.750	(rare)
Combination coefficient ψ-1'	0.800	(non frequent)
Combination coefficient ψ-1	0.750	(frequent)
Combination coefficient ψ-2	0.200	(permanent)

Loads

Kind	Referenceto	Projection W[m]	Coordinates X[m]	Y[m]	Z[m]	Type	Loadvalue
Point			95.844	2.075	0.000	PG	50.0 [kN]
	gar	3100			activated		100.00 percent
Point			97.044	2.075	0.000	PG	50.0 [kN]
	gar	3100			activated		100.00 percent
Point			95.844	4.075	0.000	PG	50.0 [kN]
	gar	3100			activated		100.00 percent
Point			97.044	4.075	0.000	PG	50.0 [kN]
	gar	3100			activated		100.00 percent

Load Case 133 (L_1) K-EN-L

Factor forces and moments	1.000	
unfavourable safety factor	1.500	
favourable safety factor	0.000	
Combination coefficient ψ-0	0.750	(rare)
Combination coefficient ψ-1'	0.800	(non frequent)
Combination coefficient ψ-1	0.750	(frequent)
Combination coefficient ψ-2	0.200	(permanent)

Loads

Kind	Referenceto	Projection W[m]	Coordinates X[m]	Y[m]	Z[m]	Type	Loadvalue
Point			100.067	2.075	0.000	PG	50.0 [kN]
	gar	3100			activated		100.00 percent
Point			101.267	2.075	0.000	PG	50.0 [kN]
	gar	3100			activated		100.00 percent
Point			100.067	4.075	0.000	PG	50.0 [kN]
	gar	3100			activated		100.00 percent
Point			101.267	4.075	0.000	PG	50.0 [kN]
	gar	3100			activated		100.00 percent

Load Case 134 (L_1) K-EN-L

Factor forces and moments	1.000	
unfavourable safety factor	1.500	
favourable safety factor	0.000	
Combination coefficient ψ-0	0.750	(rare)
Combination coefficient ψ-1'	0.800	(non frequent)
Combination coefficient ψ-1	0.750	(frequent)
Combination coefficient ψ-2	0.200	(permanent)

Loads

Kind	Referenceto	Projection W[m]	Coordinates X[m]	Y[m]	Z[m]	Type	Loadvalue
Point			104.289	2.075	0.000	PG	50.0 [kN]
	gar	3100			activated		100.00 percent
Point			105.489	2.075	0.000	PG	50.0 [kN]
	gar	3100			activated		100.00 percent
Point			104.289	4.075	0.000	PG	50.0 [kN]
	gar	3100			activated		100.00 percent
Point			105.489	4.075	0.000	PG	50.0 [kN]
	gar	3100			activated		100.00 percent

SOFiSTiK AG - www.sofistik.de

Composite bridge 38+50+38, b=14.25m, 2x2HL1100R HISTAR460 , slab 0.30m C30/37
Obciazenia zmienne

Load Case 135 (L_1) K-EN-L

Factor forces and moments	1.000	
unfavourable safety factor	1.500	
favourable safety factor	0.000	
Combination coefficient ψ-0	0.750	(rare)
Combination coefficient ψ-1'	0.800	(non frequent)
Combination coefficient ψ-1	0.750	(frequent)
Combination coefficient ψ-2	0.200	(permanent)

Loads

Kind	Referenceto	Projection W[m]	Coordinates X[m]	Y[m]	Z[m]	Type	Loadvalue
Point			108.511	2.075	0.000	PG	50.0 [kN]
	gar	3100			activated		100.00 percent
Point			109.711	2.075	0.000	PG	50.0 [kN]
	gar	3100			activated		100.00 percent
Point			108.511	4.075	0.000	PG	50.0 [kN]
	gar	3100			activated		100.00 percent
Point			109.711	4.075	0.000	PG	50.0 [kN]
	gar	3100			activated		100.00 percent

Load Case 136 (L_1) K-EN-L

Factor forces and moments	1.000	
unfavourable safety factor	1.500	
favourable safety factor	0.000	
Combination coefficient ψ-0	0.750	(rare)
Combination coefficient ψ-1'	0.800	(non frequent)
Combination coefficient ψ-1	0.750	(frequent)
Combination coefficient ψ-2	0.200	(permanent)

Loads

Kind	Referenceto	Projection W[m]	Coordinates X[m]	Y[m]	Z[m]	Type	Loadvalue
Point			112.733	2.075	0.000	PG	50.0 [kN]
	gar	3100			activated		100.00 percent
Point			113.933	2.075	0.000	PG	50.0 [kN]
	gar	3100			activated		100.00 percent
Point			112.733	4.075	0.000	PG	50.0 [kN]
	gar	3100			activated		100.00 percent
Point			113.933	4.075	0.000	PG	50.0 [kN]
	gar	3100			activated		100.00 percent

Load Case 137 (L_1) K-EN-L

Factor forces and moments	1.000	
unfavourable safety factor	1.500	
favourable safety factor	0.000	
Combination coefficient ψ-0	0.750	(rare)
Combination coefficient ψ-1'	0.800	(non frequent)
Combination coefficient ψ-1	0.750	(frequent)
Combination coefficient ψ-2	0.200	(permanent)

Loads

Kind	Referenceto	Projection W[m]	Coordinates X[m]	Y[m]	Z[m]	Type	Loadvalue
Point			116.956	2.075	0.000	PG	50.0 [kN]
	gar	3100			activated		100.00 percent
Point			118.156	2.075	0.000	PG	50.0 [kN]
	gar	3100			activated		100.00 percent
Point			116.956	4.075	0.000	PG	50.0 [kN]
	gar	3100			activated		100.00 percent
Point			118.156	4.075	0.000	PG	50.0 [kN]
	gar	3100			activated		100.00 percent

SOFiSTiK AG - www.sofistik.de

Composite bridge 38+50+38, b=14.25m, 2x2HL1100R HISTAR460 , slab 0.30m C30/37
Obciazenia zmienne

Load Case 138 (L_1) K-EN-L

```
Factor forces and moments          1.000
unfavourable safety factor         1.500
favourable safety factor           0.000
Combination coefficient ψ-0        0.750 (rare)
Combination coefficient ψ-1'       0.800 (non frequent)
Combination coefficient ψ-1        0.750 (frequent)
Combination coefficient ψ-2        0.200 (permanent)
```

Loads

```
Kind    Referenceto  Projection Coordinates                 Type Loadvalue
                          W[m]     X[m]     Y[m]     Z[m]
Point                            121.178    2.075    0.000 PG        50.0 [kN]
        gar    3100                              activated        100.00 percent
Point                            122.378    2.075    0.000 PG        50.0 [kN]
        gar    3100                              activated        100.00 percent
Point                            121.178    4.075    0.000 PG        50.0 [kN]
        gar    3100                              activated        100.00 percent
Point                            122.378    4.075    0.000 PG        50.0 [kN]
        gar    3100                              activated        100.00 percent
```

Load Case 139 (L_1) K-EN-L

```
Factor forces and moments          1.000
unfavourable safety factor         1.500
favourable safety factor           0.000
Combination coefficient ψ-0        0.750 (rare)
Combination coefficient ψ-1'       0.800 (non frequent)
Combination coefficient ψ-1        0.750 (frequent)
Combination coefficient ψ-2        0.200 (permanent)
```

Loads

```
Kind    Referenceto  Projection Coordinates                 Type Loadvalue
                          W[m]     X[m]     Y[m]     Z[m]
Point                            125.400    2.075    0.000 PG        50.0 [kN]
        gar    3100                              activated        100.00 percent
Point                            126.600    2.075    0.000 PG        50.0 [kN]
        auto ????                   (--)         activated          0.00 percent
Point                            125.400    4.075    0.000 PG        50.0 [kN]
        gar    3100                              activated        100.00 percent
Point                            126.600    4.075    0.000 PG        50.0 [kN]
        auto ????                   (--)         activated          0.00 percent
+++++ warning no.   185 in program ASE/SOFILOAD
LC-no  139 some free loads could not be completely covered,
load near hole or edge - please check SOFILOAD - loadcoordinates and projection
```

Load Case 210 (L_1) K-EN-L

```
Factor forces and moments          1.000
unfavourable safety factor         1.500
favourable safety factor           0.000
Combination coefficient ψ-0        0.750 (rare)
Combination coefficient ψ-1'       0.800 (non frequent)
Combination coefficient ψ-1        0.750 (frequent)
Combination coefficient ψ-2        0.200 (permanent)
```

Loads

```
Kind    Referenceto  Projection Coordinates                 Type Loadvalue
                          W[m]     X[m]     Y[m]     Z[m]
Point                             -0.600    5.075    0.000 PG        50.0 [kN]
        auto ????                   (--)         activated          0.00 percent
Point                              0.600    5.075    0.000 PG        50.0 [kN]
        gar    1100                              activated        100.00 percent
Point                             -0.600    7.075    0.000 PG        50.0 [kN]
        auto ????                   (--)         activated          0.00 percent
Point                              0.600    7.075    0.000 PG        50.0 [kN]
        gar    1100                              activated        100.00 percent
```

SOFiSTiK AG - www.sofistik.de

Composite bridge 38+50+38, b=14.25m, 2x2HL1100R HISTAR460 , slab 0.30m C30/37
Obciazenia zmienne

+++++ warning no. 185 in program ASE/SOFILOAD
LC-no 210 some free loads could not be completely covered,
load near hole or edge - please check SOFILOAD - loadcoordinates and projection

Load Case 211 (L_1) K-EN-L

Factor forces and moments	1.000	
unfavourable safety factor	1.500	
favourable safety factor	0.000	
Combination coefficient ψ-0	0.750	(rare)
Combination coefficient ψ-1'	0.800	(non frequent)
Combination coefficient ψ-1	0.750	(frequent)
Combination coefficient ψ-2	0.200	(permanent)

Loads

Kind	Referenceto	Projection W[m]	Coordinates X[m]	Y[m]	Z[m]	Type	Loadvalue
Point			3.622	5.075	0.000	PG	50.0 [kN]
	gar	1100			activated		100.00 percent
Point			4.822	5.075	0.000	PG	50.0 [kN]
	gar	1100			activated		100.00 percent
Point			3.622	7.075	0.000	PG	50.0 [kN]
	gar	1100			activated		100.00 percent
Point			4.822	7.075	0.000	PG	50.0 [kN]
	gar	1100			activated		100.00 percent

Load Case 212 (L_1) K-EN-L

Factor forces and moments	1.000	
unfavourable safety factor	1.500	
favourable safety factor	0.000	
Combination coefficient ψ-0	0.750	(rare)
Combination coefficient ψ-1'	0.800	(non frequent)
Combination coefficient ψ-1	0.750	(frequent)
Combination coefficient ψ-2	0.200	(permanent)

Loads

Kind	Referenceto	Projection W[m]	Coordinates X[m]	Y[m]	Z[m]	Type	Loadvalue
Point			7.844	5.075	0.000	PG	50.0 [kN]
	gar	1100			activated		100.00 percent
Point			9.044	5.075	0.000	PG	50.0 [kN]
	gar	1100			activated		100.00 percent
Point			7.844	7.075	0.000	PG	50.0 [kN]
	gar	1100			activated		100.00 percent
Point			9.044	7.075	0.000	PG	50.0 [kN]
	gar	1100			activated		100.00 percent

Load Case 213 (L_1) K-EN-L

Factor forces and moments	1.000	
unfavourable safety factor	1.500	
favourable safety factor	0.000	
Combination coefficient ψ-0	0.750	(rare)
Combination coefficient ψ-1'	0.800	(non frequent)
Combination coefficient ψ-1	0.750	(frequent)
Combination coefficient ψ-2	0.200	(permanent)

Loads

Kind	Referenceto	Projection W[m]	Coordinates X[m]	Y[m]	Z[m]	Type	Loadvalue
Point			12.067	5.075	0.000	PG	50.0 [kN]
	gar	1100			activated		100.00 percent
Point			13.267	5.075	0.000	PG	50.0 [kN]
	gar	1100			activated		100.00 percent
Point			12.067	7.075	0.000	PG	50.0 [kN]
	gar	1100			activated		100.00 percent
Point			13.267	7.075	0.000	PG	50.0 [kN]
	gar	1100			activated		100.00 percent

SOFiSTiK AG - www.sofistik.de

Composite bridge 38+50+38, b=14.25m, 2x2HL1100R HISTAR460 , slab 0.30m C30/37
Obciazenia zmienne

Load Case 214 (L_1) K-EN-L

Factor forces and moments	1.000	
unfavourable safety factor	1.500	
favourable safety factor	0.000	
Combination coefficient ψ-0	0.750	(rare)
Combination coefficient ψ-1'	0.800	(non frequent)
Combination coefficient ψ-1	0.750	(frequent)
Combination coefficient ψ-2	0.200	(permanent)

Loads

Kind	Referenceto	Projection W[m]	Coordinates X[m]	Y[m]	Z[m]	Type	Loadvalue
Point			16.289	5.075	0.000	PG	50.0 [kN]
	gar	1100			activated		100.00 percent
Point			17.489	5.075	0.000	PG	50.0 [kN]
	gar	1100			activated		100.00 percent
Point			16.289	7.075	0.000	PG	50.0 [kN]
	gar	1100			activated		100.00 percent
Point			17.489	7.075	0.000	PG	50.0 [kN]
	gar	1100			activated		100.00 percent

Load Case 215 (L_1) K-EN-L

Factor forces and moments	1.000	
unfavourable safety factor	1.500	
favourable safety factor	0.000	
Combination coefficient ψ-0	0.750	(rare)
Combination coefficient ψ-1'	0.800	(non frequent)
Combination coefficient ψ-1	0.750	(frequent)
Combination coefficient ψ-2	0.200	(permanent)

Loads

Kind	Referenceto	Projection W[m]	Coordinates X[m]	Y[m]	Z[m]	Type	Loadvalue
Point			20.511	5.075	0.000	PG	50.0 [kN]
	gar	1100			activated		100.00 percent
Point			21.711	5.075	0.000	PG	50.0 [kN]
	gar	1100			activated		100.00 percent
Point			20.511	7.075	0.000	PG	50.0 [kN]
	gar	1100			activated		100.00 percent
Point			21.711	7.075	0.000	PG	50.0 [kN]
	gar	1100			activated		100.00 percent

Load Case 216 (L_1) K-EN-L

Factor forces and moments	1.000	
unfavourable safety factor	1.500	
favourable safety factor	0.000	
Combination coefficient ψ-0	0.750	(rare)
Combination coefficient ψ-1'	0.800	(non frequent)
Combination coefficient ψ-1	0.750	(frequent)
Combination coefficient ψ-2	0.200	(permanent)

Loads

Kind	Referenceto	Projection W[m]	Coordinates X[m]	Y[m]	Z[m]	Type	Loadvalue
Point			24.733	5.075	0.000	PG	50.0 [kN]
	gar	1100			activated		100.00 percent
Point			25.933	5.075	0.000	PG	50.0 [kN]
	gar	1100			activated		100.00 percent
Point			24.733	7.075	0.000	PG	50.0 [kN]
	gar	1100			activated		100.00 percent
Point			25.933	7.075	0.000	PG	50.0 [kN]
	gar	1100			activated		100.00 percent

SOFiSTiK AG - www.sofistik.de

Composite bridge 38+50+38, b=14.25m, 2x2HL1100R HISTAR460 , slab 0.30m C30/37
Obciazenia zmienne

Load Case 217 (L_1) K-EN-L

Factor forces and moments	1.000	
unfavourable safety factor	1.500	
favourable safety factor	0.000	
Combination coefficient ψ-0	0.750	(rare)
Combination coefficient ψ-1'	0.800	(non frequent)
Combination coefficient ψ-1	0.750	(frequent)
Combination coefficient ψ-2	0.200	(permanent)

Loads

Kind	Referenceto	Projection W[m]	Coordinates X[m]	Y[m]	Z[m]	Type	Loadvalue
Point			28.956	5.075	0.000	PG	50.0 [kN]
	gar	1100			activated		100.00 percent
Point			30.156	5.075	0.000	PG	50.0 [kN]
	gar	1100			activated		100.00 percent
Point			28.956	7.075	0.000	PG	50.0 [kN]
	gar	1100			activated		100.00 percent
Point			30.156	7.075	0.000	PG	50.0 [kN]
	gar	1100			activated		100.00 percent

Load Case 218 (L_1) K-EN-L

Factor forces and moments	1.000	
unfavourable safety factor	1.500	
favourable safety factor	0.000	
Combination coefficient ψ-0	0.750	(rare)
Combination coefficient ψ-1'	0.800	(non frequent)
Combination coefficient ψ-1	0.750	(frequent)
Combination coefficient ψ-2	0.200	(permanent)

Loads

Kind	Referenceto	Projection W[m]	Coordinates X[m]	Y[m]	Z[m]	Type	Loadvalue
Point			33.178	5.075	0.000	PG	50.0 [kN]
	gar	1100			activated		100.00 percent
Point			34.378	5.075	0.000	PG	50.0 [kN]
	gar	1100			activated		100.00 percent
Point			33.178	7.075	0.000	PG	50.0 [kN]
	gar	1100			activated		100.00 percent
Point			34.378	7.075	0.000	PG	50.0 [kN]
	gar	1100			activated		100.00 percent

Load Case 219 (L_1) K-EN-L

Factor forces and moments	1.000	
unfavourable safety factor	1.500	
favourable safety factor	0.000	
Combination coefficient ψ-0	0.750	(rare)
Combination coefficient ψ-1'	0.800	(non frequent)
Combination coefficient ψ-1	0.750	(frequent)
Combination coefficient ψ-2	0.200	(permanent)

Loads

Kind	Referenceto	Projection W[m]	Coordinates X[m]	Y[m]	Z[m]	Type	Loadvalue
Point			37.400	5.075	0.000	PG	50.0 [kN]
	gar	1100			activated		100.00 percent
Point			38.600	5.075	0.000	PG	50.0 [kN]
	gar	2100			activated		100.00 percent
Point			37.400	7.075	0.000	PG	50.0 [kN]
	gar	1100			activated		100.00 percent
Point			38.600	7.075	0.000	PG	50.0 [kN]
	gar	2100			activated		100.00 percent

SOFiSTiK AG - www.sofistik.de

Composite bridge 38+50+38, b=14.25m, 2x2HL1100R HISTAR460 , slab 0.30m C30/37
Obciazenia zmienne

Load Case 220 (L_1) K-EN-L

Factor forces and moments	1.000	
unfavourable safety factor	1.500	
favourable safety factor	0.000	
Combination coefficient ψ-0	0.750	(rare)
Combination coefficient ψ-1'	0.800	(non frequent)
Combination coefficient ψ-1	0.750	(frequent)
Combination coefficient ψ-2	0.200	(permanent)

Loads

Kind	Referenceto	Projection W[m]	Coordinates X[m]	Y[m]	Z[m]	Type	Loadvalue
Point			37.400	5.075	0.000	PG	50.0 [kN]
	gar 1100				activated		100.00 percent
Point			38.600	5.075	0.000	PG	50.0 [kN]
	gar 2100				activated		100.00 percent
Point			37.400	7.075	0.000	PG	50.0 [kN]
	gar 1100				activated		100.00 percent
Point			38.600	7.075	0.000	PG	50.0 [kN]
	gar 2100				activated		100.00 percent

Load Case 221 (L_1) K-EN-L

Factor forces and moments	1.000	
unfavourable safety factor	1.500	
favourable safety factor	0.000	
Combination coefficient ψ-0	0.750	(rare)
Combination coefficient ψ-1'	0.800	(non frequent)
Combination coefficient ψ-1	0.750	(frequent)
Combination coefficient ψ-2	0.200	(permanent)

Loads

Kind	Referenceto	Projection W[m]	Coordinates X[m]	Y[m]	Z[m]	Type	Loadvalue
Point			42.956	5.075	0.000	PG	50.0 [kN]
	gar 2100				activated		100.00 percent
Point			44.156	5.075	0.000	PG	50.0 [kN]
	gar 2100				activated		100.00 percent
Point			42.956	7.075	0.000	PG	50.0 [kN]
	gar 2100				activated		100.00 percent
Point			44.156	7.075	0.000	PG	50.0 [kN]
	gar 2100				activated		100.00 percent

Load Case 222 (L_1) K-EN-L

Factor forces and moments	1.000	
unfavourable safety factor	1.500	
favourable safety factor	0.000	
Combination coefficient ψ-0	0.750	(rare)
Combination coefficient ψ-1'	0.800	(non frequent)
Combination coefficient ψ-1	0.750	(frequent)
Combination coefficient ψ-2	0.200	(permanent)

Loads

Kind	Referenceto	Projection W[m]	Coordinates X[m]	Y[m]	Z[m]	Type	Loadvalue
Point			48.511	5.075	0.000	PG	50.0 [kN]
	gar 2100				activated		100.00 percent
Point			49.711	5.075	0.000	PG	50.0 [kN]
	gar 2100				activated		100.00 percent
Point			48.511	7.075	0.000	PG	50.0 [kN]
	gar 2100				activated		100.00 percent
Point			49.711	7.075	0.000	PG	50.0 [kN]
	gar 2100				activated		100.00 percent

SOFiSTiK AG - www.sofistik.de

Composite bridge 38+50+38, b=14.25m, 2x2HL1100R HISTAR460 , slab 0.30m C30/37
Obciazenia zmienne

Load Case 223 (L_1) K-EN-L

Factor forces and moments	1.000	
unfavourable safety factor	1.500	
favourable safety factor	0.000	
Combination coefficient ψ-0	0.750	(rare)
Combination coefficient ψ-1'	0.800	(non frequent)
Combination coefficient ψ-1	0.750	(frequent)
Combination coefficient ψ-2	0.200	(permanent)

Loads

Kind	Referenceto	Projection W[m]	Coordinates X[m]	Y[m]	Z[m]	Type	Loadvalue
Point			54.067	5.075	0.000	PG	50.0 [kN]
	gar	2100			activated		100.00 percent
Point			55.267	5.075	0.000	PG	50.0 [kN]
	gar	2100			activated		100.00 percent
Point			54.067	7.075	0.000	PG	50.0 [kN]
	gar	2100			activated		100.00 percent
Point			55.267	7.075	0.000	PG	50.0 [kN]
	gar	2100			activated		100.00 percent

Load Case 224 (L_1) K-EN-L

Factor forces and moments	1.000	
unfavourable safety factor	1.500	
favourable safety factor	0.000	
Combination coefficient ψ-0	0.750	(rare)
Combination coefficient ψ-1'	0.800	(non frequent)
Combination coefficient ψ-1	0.750	(frequent)
Combination coefficient ψ-2	0.200	(permanent)

Loads

Kind	Referenceto	Projection W[m]	Coordinates X[m]	Y[m]	Z[m]	Type	Loadvalue
Point			59.622	5.075	0.000	PG	50.0 [kN]
	gar	2100			activated		100.00 percent
Point			60.822	5.075	0.000	PG	50.0 [kN]
	gar	2100			activated		100.00 percent
Point			59.622	7.075	0.000	PG	50.0 [kN]
	gar	2100			activated		100.00 percent
Point			60.822	7.075	0.000	PG	50.0 [kN]
	gar	2100			activated		100.00 percent

Load Case 225 (L_1) K-EN-L

Factor forces and moments	1.000	
unfavourable safety factor	1.500	
favourable safety factor	0.000	
Combination coefficient ψ-0	0.750	(rare)
Combination coefficient ψ-1'	0.800	(non frequent)
Combination coefficient ψ-1	0.750	(frequent)
Combination coefficient ψ-2	0.200	(permanent)

Loads

Kind	Referenceto	Projection W[m]	Coordinates X[m]	Y[m]	Z[m]	Type	Loadvalue
Point			65.178	5.075	0.000	PG	50.0 [kN]
	gar	2100			activated		100.00 percent
Point			66.378	5.075	0.000	PG	50.0 [kN]
	gar	2100			activated		100.00 percent
Point			65.178	7.075	0.000	PG	50.0 [kN]
	gar	2100			activated		100.00 percent
Point			66.378	7.075	0.000	PG	50.0 [kN]
	gar	2100			activated		100.00 percent

SOFiSTiK AG - www.sofistik.de

Composite bridge 38+50+38, b=14.25m, 2x2HL1100R HISTAR460 , slab 0.30m C30/37
Obciazenia zmienne

Load Case 226 (L_1) K-EN-L

Factor forces and moments	1.000	
unfavourable safety factor	1.500	
favourable safety factor	0.000	
Combination coefficient ψ-0	0.750	(rare)
Combination coefficient ψ-1'	0.800	(non frequent)
Combination coefficient ψ-1	0.750	(frequent)
Combination coefficient ψ-2	0.200	(permanent)

Loads

Kind	Referenceto	Projection W[m]	Coordinates X[m]	Y[m]	Z[m]	Type	Loadvalue
Point			70.733	5.075	0.000	PG	50.0 [kN]
	gar	2100			activated		100.00 percent
Point			71.933	5.075	0.000	PG	50.0 [kN]
	gar	2100			activated		100.00 percent
Point			70.733	7.075	0.000	PG	50.0 [kN]
	gar	2100			activated		100.00 percent
Point			71.933	7.075	0.000	PG	50.0 [kN]
	gar	2100			activated		100.00 percent

Load Case 227 (L_1) K-EN-L

Factor forces and moments	1.000	
unfavourable safety factor	1.500	
favourable safety factor	0.000	
Combination coefficient ψ-0	0.750	(rare)
Combination coefficient ψ-1'	0.800	(non frequent)
Combination coefficient ψ-1	0.750	(frequent)
Combination coefficient ψ-2	0.200	(permanent)

Loads

Kind	Referenceto	Projection W[m]	Coordinates X[m]	Y[m]	Z[m]	Type	Loadvalue
Point			76.289	5.075	0.000	PG	50.0 [kN]
	gar	2100			activated		100.00 percent
Point			77.489	5.075	0.000	PG	50.0 [kN]
	gar	2100			activated		100.00 percent
Point			76.289	7.075	0.000	PG	50.0 [kN]
	gar	2100			activated		100.00 percent
Point			77.489	7.075	0.000	PG	50.0 [kN]
	gar	2100			activated		100.00 percent

Load Case 228 (L_1) K-EN-L

Factor forces and moments	1.000	
unfavourable safety factor	1.500	
favourable safety factor	0.000	
Combination coefficient ψ-0	0.750	(rare)
Combination coefficient ψ-1'	0.800	(non frequent)
Combination coefficient ψ-1	0.750	(frequent)
Combination coefficient ψ-2	0.200	(permanent)

Loads

Kind	Referenceto	Projection W[m]	Coordinates X[m]	Y[m]	Z[m]	Type	Loadvalue
Point			81.844	5.075	0.000	PG	50.0 [kN]
	gar	2100			activated		100.00 percent
Point			83.044	5.075	0.000	PG	50.0 [kN]
	gar	2100			activated		100.00 percent
Point			81.844	7.075	0.000	PG	50.0 [kN]
	gar	2100			activated		100.00 percent
Point			83.044	7.075	0.000	PG	50.0 [kN]
	gar	2100			activated		100.00 percent

SOFiSTiK AG - www.sofistik.de

Composite bridge 38+50+38, b=14.25m, 2x2HL1100R HISTAR460 , slab 0.30m C30/37
Obciazenia zmienne

Load Case 229 (L_1) K-EN-L

Factor forces and moments	1.000	
unfavourable safety factor	1.500	
favourable safety factor	0.000	
Combination coefficient ψ-0	0.750	(rare)
Combination coefficient ψ-1'	0.800	(non frequent)
Combination coefficient ψ-1	0.750	(frequent)
Combination coefficient ψ-2	0.200	(permanent)

Loads

Kind	Referenceto	Projection W[m]	Coordinates X[m]	Y[m]	Z[m]	Type	Loadvalue
Point			87.400	5.075	0.000	PG	50.0 [kN]
	gar	2100			activated		100.00 percent
Point			88.600	5.075	0.000	PG	50.0 [kN]
	gar	3100			activated		100.00 percent
Point			87.400	7.075	0.000	PG	50.0 [kN]
	gar	2100			activated		100.00 percent
Point			88.600	7.075	0.000	PG	50.0 [kN]
	gar	3100			activated		100.00 percent

Load Case 230 (L_1) K-EN-L

Factor forces and moments	1.000	
unfavourable safety factor	1.500	
favourable safety factor	0.000	
Combination coefficient ψ-0	0.750	(rare)
Combination coefficient ψ-1'	0.800	(non frequent)
Combination coefficient ψ-1	0.750	(frequent)
Combination coefficient ψ-2	0.200	(permanent)

Loads

Kind	Referenceto	Projection W[m]	Coordinates X[m]	Y[m]	Z[m]	Type	Loadvalue
Point			87.400	5.075	0.000	PG	50.0 [kN]
	gar	2100			activated		100.00 percent
Point			88.600	5.075	0.000	PG	50.0 [kN]
	gar	3100			activated		100.00 percent
Point			87.400	7.075	0.000	PG	50.0 [kN]
	gar	2100			activated		100.00 percent
Point			88.600	7.075	0.000	PG	50.0 [kN]
	gar	3100			activated		100.00 percent

Load Case 231 (L_1) K-EN-L

Factor forces and moments	1.000	
unfavourable safety factor	1.500	
favourable safety factor	0.000	
Combination coefficient ψ-0	0.750	(rare)
Combination coefficient ψ-1'	0.800	(non frequent)
Combination coefficient ψ-1	0.750	(frequent)
Combination coefficient ψ-2	0.200	(permanent)

Loads

Kind	Referenceto	Projection W[m]	Coordinates X[m]	Y[m]	Z[m]	Type	Loadvalue
Point			91.622	5.075	0.000	PG	50.0 [kN]
	gar	3100			activated		100.00 percent
Point			92.822	5.075	0.000	PG	50.0 [kN]
	gar	3100			activated		100.00 percent
Point			91.622	7.075	0.000	PG	50.0 [kN]
	gar	3100			activated		100.00 percent
Point			92.822	7.075	0.000	PG	50.0 [kN]
	gar	3100			activated		100.00 percent

SOFiSTiK AG - www.sofistik.de

Composite bridge 38+50+38, b=14.25m, 2x2HL1100R HISTAR460 , slab 0.30m C30/37
Obciazenia zmienne

Load Case 232 (L_1) K-EN-L

Factor forces and moments	1.000	
unfavourable safety factor	1.500	
favourable safety factor	0.000	
Combination coefficient ψ-0	0.750	(rare)
Combination coefficient ψ-1'	0.800	(non frequent)
Combination coefficient ψ-1	0.750	(frequent)
Combination coefficient ψ-2	0.200	(permanent)

Loads

Kind	Referenceto	Projection W[m]	Coordinates X[m]	Y[m]	Z[m]	Type	Loadvalue
Point			95.844	5.075	0.000	PG	50.0 [kN]
	gar	3100			activated		100.00 percent
Point			97.044	5.075	0.000	PG	50.0 [kN]
	gar	3100			activated		100.00 percent
Point			95.844	7.075	0.000	PG	50.0 [kN]
	gar	3100			activated		100.00 percent
Point			97.044	7.075	0.000	PG	50.0 [kN]
	gar	3100			activated		100.00 percent

Load Case 233 (L_1) K-EN-L

Factor forces and moments	1.000	
unfavourable safety factor	1.500	
favourable safety factor	0.000	
Combination coefficient ψ-0	0.750	(rare)
Combination coefficient ψ-1'	0.800	(non frequent)
Combination coefficient ψ-1	0.750	(frequent)
Combination coefficient ψ-2	0.200	(permanent)

Loads

Kind	Referenceto	Projection W[m]	Coordinates X[m]	Y[m]	Z[m]	Type	Loadvalue
Point			100.067	5.075	0.000	PG	50.0 [kN]
	gar	3100			activated		100.00 percent
Point			101.267	5.075	0.000	PG	50.0 [kN]
	gar	3100			activated		100.00 percent
Point			100.067	7.075	0.000	PG	50.0 [kN]
	gar	3100			activated		100.00 percent
Point			101.267	7.075	0.000	PG	50.0 [kN]
	gar	3100			activated		100.00 percent

Load Case 234 (L_1) K-EN-L

Factor forces and moments	1.000	
unfavourable safety factor	1.500	
favourable safety factor	0.000	
Combination coefficient ψ-0	0.750	(rare)
Combination coefficient ψ-1'	0.800	(non frequent)
Combination coefficient ψ-1	0.750	(frequent)
Combination coefficient ψ-2	0.200	(permanent)

Loads

Kind	Referenceto	Projection W[m]	Coordinates X[m]	Y[m]	Z[m]	Type	Loadvalue
Point			104.289	5.075	0.000	PG	50.0 [kN]
	gar	3100			activated		100.00 percent
Point			105.489	5.075	0.000	PG	50.0 [kN]
	gar	3100			activated		100.00 percent
Point			104.289	7.075	0.000	PG	50.0 [kN]
	gar	3100			activated		100.00 percent
Point			105.489	7.075	0.000	PG	50.0 [kN]
	gar	3100			activated		100.00 percent

SOFiSTiK AG - www.sofistik.de

Composite bridge 38+50+38, b=14.25m, 2x2HL1100R HISTAR460 , slab 0.30m C30/37
Obciazenia zmienne

Load Case 235 (L_1) K-EN-L

Factor forces and moments	1.000	
unfavourable safety factor	1.500	
favourable safety factor	0.000	
Combination coefficient ψ-0	0.750	(rare)
Combination coefficient ψ-1'	0.800	(non frequent)
Combination coefficient ψ-1	0.750	(frequent)
Combination coefficient ψ-2	0.200	(permanent)

Loads

Kind	Referenceto	Projection W[m]	Coordinates X[m]	Y[m]	Z[m]	Type	Loadvalue
Point			108.511	5.075	0.000	PG	50.0 [kN]
	gar	3100			activated		100.00 percent
Point			109.711	5.075	0.000	PG	50.0 [kN]
	gar	3100			activated		100.00 percent
Point			108.511	7.075	0.000	PG	50.0 [kN]
	gar	3100			activated		100.00 percent
Point			109.711	7.075	0.000	PG	50.0 [kN]
	gar	3100			activated		100.00 percent

Load Case 236 (L_1) K-EN-L

Factor forces and moments	1.000	
unfavourable safety factor	1.500	
favourable safety factor	0.000	
Combination coefficient ψ-0	0.750	(rare)
Combination coefficient ψ-1'	0.800	(non frequent)
Combination coefficient ψ-1	0.750	(frequent)
Combination coefficient ψ-2	0.200	(permanent)

Loads

Kind	Referenceto	Projection W[m]	Coordinates X[m]	Y[m]	Z[m]	Type	Loadvalue
Point			112.733	5.075	0.000	PG	50.0 [kN]
	gar	3100			activated		100.00 percent
Point			113.933	5.075	0.000	PG	50.0 [kN]
	gar	3100			activated		100.00 percent
Point			112.733	7.075	0.000	PG	50.0 [kN]
	gar	3100			activated		100.00 percent
Point			113.933	7.075	0.000	PG	50.0 [kN]
	gar	3100			activated		100.00 percent

Load Case 237 (L_1) K-EN-L

Factor forces and moments	1.000	
unfavourable safety factor	1.500	
favourable safety factor	0.000	
Combination coefficient ψ-0	0.750	(rare)
Combination coefficient ψ-1'	0.800	(non frequent)
Combination coefficient ψ-1	0.750	(frequent)
Combination coefficient ψ-2	0.200	(permanent)

Loads

Kind	Referenceto	Projection W[m]	Coordinates X[m]	Y[m]	Z[m]	Type	Loadvalue
Point			116.956	5.075	0.000	PG	50.0 [kN]
	gar	3100			activated		100.00 percent
Point			118.156	5.075	0.000	PG	50.0 [kN]
	gar	3100			activated		100.00 percent
Point			116.956	7.075	0.000	PG	50.0 [kN]
	gar	3100			activated		100.00 percent
Point			118.156	7.075	0.000	PG	50.0 [kN]
	gar	3100			activated		100.00 percent

SOFiSTiK AG - www.sofistik.de

Composite bridge 38+50+38, b=14.25m, 2x2HL1100R HISTAR460 , slab 0.30m C30/37
Obciazenia zmienne

Load Case 238 (L_1) K-EN-L

```
Factor forces and moments          1.000
unfavourable safety factor         1.500
favourable safety factor           0.000
Combination coefficient ψ-0        0.750 (rare)
Combination coefficient ψ-1'       0.800 (non frequent)
Combination coefficient ψ-1        0.750 (frequent)
Combination coefficient ψ-2        0.200 (permanent)
```

Loads

```
Kind    Referenceto  Projection Coordinates                 Type Loadvalue
                          W[m]     X[m]     Y[m]     Z[m]
Point                            121.178    5.075    0.000 PG        50.0 [kN]
        gar    3100                              activated        100.00 percent
Point                            122.378    5.075    0.000 PG        50.0 [kN]
        gar    3100                              activated        100.00 percent
Point                            121.178    7.075    0.000 PG        50.0 [kN]
        gar    3100                              activated        100.00 percent
Point                            122.378    7.075    0.000 PG        50.0 [kN]
        gar    3100                              activated        100.00 percent
```

Load Case 239 (L_1) K-EN-L

```
Factor forces and moments          1.000
unfavourable safety factor         1.500
favourable safety factor           0.000
Combination coefficient ψ-0        0.750 (rare)
Combination coefficient ψ-1'       0.800 (non frequent)
Combination coefficient ψ-1        0.750 (frequent)
Combination coefficient ψ-2        0.200 (permanent)
```

Loads

```
Kind    Referenceto  Projection Coordinates                 Type Loadvalue
                          W[m]     X[m]     Y[m]     Z[m]
Point                            125.400    5.075    0.000 PG        50.0 [kN]
        gar    3100                              activated        100.00 percent
Point                            126.600    5.075    0.000 PG        50.0 [kN]
        auto ????                   (--)         activated          0.00 percent
Point                            125.400    7.075    0.000 PG        50.0 [kN]
        gar    3100                              activated        100.00 percent
Point                            126.600    7.075    0.000 PG        50.0 [kN]
        auto ????                   (--)         activated          0.00 percent
+++++ warning no.   185 in program ASE/SOFILOAD
LC-no  239 some free loads could not be completely covered,
load near hole or edge - please check SOFILOAD - loadcoordinates and projection
```

Load Case 410 (L_1) K-EN-R

```
Factor forces and moments          1.000
unfavourable safety factor         1.500
favourable safety factor           0.000
Combination coefficient ψ-0        0.750 (rare)
Combination coefficient ψ-1'       0.800 (non frequent)
Combination coefficient ψ-1        0.750 (frequent)
Combination coefficient ψ-2        0.200 (permanent)
```

Loads

```
Kind    Referenceto  Projection Coordinates                 Type Loadvalue
                          W[m]     X[m]     Y[m]     Z[m]
Point                             -0.600    7.675    0.000 PG        50.0 [kN]
        auto ????                   (--)         activated          0.00 percent
Point                              0.600    7.675    0.000 PG        50.0 [kN]
        gar    1100                              activated        100.00 percent
Point                             -0.600    9.675    0.000 PG        50.0 [kN]
        auto ????                   (--)         activated          0.00 percent
Point                              0.600    9.675    0.000 PG        50.0 [kN]
        gar    1900                              activated        100.00 percent
```

SOFiSTiK AG - www.sofistik.de

Composite bridge 38+50+38, b=14.25m, 2x2HL1100R HISTAR460 , slab 0.30m C30/37
Obciazenia zmienne

+++++ warning no. 185 in program ASE/SOFILOAD
LC-no 410 some free loads could not be completely covered,
load near hole or edge - please check SOFILOAD - loadcoordinates and projection

Load Case 411 (L_1) K-EN-R

Factor forces and moments	1.000	
unfavourable safety factor	1.500	
favourable safety factor	0.000	
Combination coefficient ψ-0	0.750	(rare)
Combination coefficient ψ-1'	0.800	(non frequent)
Combination coefficient ψ-1	0.750	(frequent)
Combination coefficient ψ-2	0.200	(permanent)

Loads

Kind	Referenceto	Projection W[m]	Coordinates X[m]	Y[m]	Z[m]	Type	Loadvalue
Point			3.622	7.675	0.000	PG	50.0 [kN]
	gar 1100				activated		100.00 percent
Point			4.822	7.675	0.000	PG	50.0 [kN]
	gar 1100				activated		100.00 percent
Point			3.622	9.675	0.000	PG	50.0 [kN]
	gar 1900				activated		100.00 percent
Point			4.822	9.675	0.000	PG	50.0 [kN]
	gar 1900				activated		100.00 percent

Load Case 412 (L_1) K-EN-R

Factor forces and moments	1.000	
unfavourable safety factor	1.500	
favourable safety factor	0.000	
Combination coefficient ψ-0	0.750	(rare)
Combination coefficient ψ-1'	0.800	(non frequent)
Combination coefficient ψ-1	0.750	(frequent)
Combination coefficient ψ-2	0.200	(permanent)

Loads

Kind	Referenceto	Projection W[m]	Coordinates X[m]	Y[m]	Z[m]	Type	Loadvalue
Point			7.844	7.675	0.000	PG	50.0 [kN]
	gar 1100				activated		100.00 percent
Point			9.044	7.675	0.000	PG	50.0 [kN]
	gar 1100				activated		100.00 percent
Point			7.844	9.675	0.000	PG	50.0 [kN]
	gar 1900				activated		100.00 percent
Point			9.044	9.675	0.000	PG	50.0 [kN]
	gar 1900				activated		100.00 percent

Load Case 413 (L_1) K-EN-R

Factor forces and moments	1.000	
unfavourable safety factor	1.500	
favourable safety factor	0.000	
Combination coefficient ψ-0	0.750	(rare)
Combination coefficient ψ-1'	0.800	(non frequent)
Combination coefficient ψ-1	0.750	(frequent)
Combination coefficient ψ-2	0.200	(permanent)

Loads

Kind	Referenceto	Projection W[m]	Coordinates X[m]	Y[m]	Z[m]	Type	Loadvalue
Point			12.067	7.675	0.000	PG	50.0 [kN]
	gar 1100				activated		100.00 percent
Point			13.267	7.675	0.000	PG	50.0 [kN]
	gar 1100				activated		100.00 percent
Point			12.067	9.675	0.000	PG	50.0 [kN]
	gar 1900				activated		100.00 percent
Point			13.267	9.675	0.000	PG	50.0 [kN]
	gar 1900				activated		100.00 percent

SOFiSTiK AG - www.sofistik.de

Composite bridge 38+50+38, b=14.25m, 2x2HL1100R HISTAR460 , slab 0.30m C30/37
Obciazenia zmienne

Load Case 414 (L_1) K-EN-R

Factor forces and moments	1.000	
unfavourable safety factor	1.500	
favourable safety factor	0.000	
Combination coefficient ψ-0	0.750	(rare)
Combination coefficient ψ-1'	0.800	(non frequent)
Combination coefficient ψ-1	0.750	(frequent)
Combination coefficient ψ-2	0.200	(permanent)

Loads

Kind	Referenceto	Projection W[m]	Coordinates X[m]	Y[m]	Z[m]	Type	Loadvalue
Point			16.289	7.675	0.000	PG	50.0 [kN]
	gar	1100			activated		100.00 percent
Point			17.489	7.675	0.000	PG	50.0 [kN]
	gar	1100			activated		100.00 percent
Point			16.289	9.675	0.000	PG	50.0 [kN]
	gar	1900			activated		100.00 percent
Point			17.489	9.675	0.000	PG	50.0 [kN]
	gar	1900			activated		100.00 percent

Load Case 415 (L_1) K-EN-R

Factor forces and moments	1.000	
unfavourable safety factor	1.500	
favourable safety factor	0.000	
Combination coefficient ψ-0	0.750	(rare)
Combination coefficient ψ-1'	0.800	(non frequent)
Combination coefficient ψ-1	0.750	(frequent)
Combination coefficient ψ-2	0.200	(permanent)

Loads

Kind	Referenceto	Projection W[m]	Coordinates X[m]	Y[m]	Z[m]	Type	Loadvalue
Point			20.511	7.675	0.000	PG	50.0 [kN]
	gar	1100			activated		100.00 percent
Point			21.711	7.675	0.000	PG	50.0 [kN]
	gar	1100			activated		100.00 percent
Point			20.511	9.675	0.000	PG	50.0 [kN]
	gar	1900			activated		100.00 percent
Point			21.711	9.675	0.000	PG	50.0 [kN]
	gar	1900			activated		100.00 percent

Load Case 416 (L_1) K-EN-R

Factor forces and moments	1.000	
unfavourable safety factor	1.500	
favourable safety factor	0.000	
Combination coefficient ψ-0	0.750	(rare)
Combination coefficient ψ-1'	0.800	(non frequent)
Combination coefficient ψ-1	0.750	(frequent)
Combination coefficient ψ-2	0.200	(permanent)

Loads

Kind	Referenceto	Projection W[m]	Coordinates X[m]	Y[m]	Z[m]	Type	Loadvalue
Point			24.733	7.675	0.000	PG	50.0 [kN]
	gar	1100			activated		100.00 percent
Point			25.933	7.675	0.000	PG	50.0 [kN]
	gar	1100			activated		100.00 percent
Point			24.733	9.675	0.000	PG	50.0 [kN]
	gar	1900			activated		100.00 percent
Point			25.933	9.675	0.000	PG	50.0 [kN]
	gar	1900			activated		100.00 percent

SOFiSTiK AG - www.sofistik.de

Composite bridge 38+50+38, b=14.25m, 2x2HL1100R HISTAR460 , slab 0.30m C30/37
Obciazenia zmienne

Load Case 417 (L_1) K-EN-R

Factor forces and moments	1.000	
unfavourable safety factor	1.500	
favourable safety factor	0.000	
Combination coefficient ψ-0	0.750	(rare)
Combination coefficient ψ-1'	0.800	(non frequent)
Combination coefficient ψ-1	0.750	(frequent)
Combination coefficient ψ-2	0.200	(permanent)

Loads

Kind	Referenceto	Projection W[m]	Coordinates X[m]	Y[m]	Z[m]	Type	Loadvalue
Point			28.956	7.675	0.000	PG	50.0 [kN]
	gar 1100				activated		100.00 percent
Point			30.156	7.675	0.000	PG	50.0 [kN]
	gar 1100				activated		100.00 percent
Point			28.956	9.675	0.000	PG	50.0 [kN]
	gar 1900				activated		100.00 percent
Point			30.156	9.675	0.000	PG	50.0 [kN]
	gar 1900				activated		100.00 percent

Load Case 418 (L_1) K-EN-R

Factor forces and moments	1.000	
unfavourable safety factor	1.500	
favourable safety factor	0.000	
Combination coefficient ψ-0	0.750	(rare)
Combination coefficient ψ-1'	0.800	(non frequent)
Combination coefficient ψ-1	0.750	(frequent)
Combination coefficient ψ-2	0.200	(permanent)

Loads

Kind	Referenceto	Projection W[m]	Coordinates X[m]	Y[m]	Z[m]	Type	Loadvalue
Point			33.178	7.675	0.000	PG	50.0 [kN]
	gar 1100				activated		100.00 percent
Point			34.378	7.675	0.000	PG	50.0 [kN]
	gar 1100				activated		100.00 percent
Point			33.178	9.675	0.000	PG	50.0 [kN]
	gar 1900				activated		100.00 percent
Point			34.378	9.675	0.000	PG	50.0 [kN]
	gar 1900				activated		100.00 percent

Load Case 419 (L_1) K-EN-R

Factor forces and moments	1.000	
unfavourable safety factor	1.500	
favourable safety factor	0.000	
Combination coefficient ψ-0	0.750	(rare)
Combination coefficient ψ-1'	0.800	(non frequent)
Combination coefficient ψ-1	0.750	(frequent)
Combination coefficient ψ-2	0.200	(permanent)

Loads

Kind	Referenceto	Projection W[m]	Coordinates X[m]	Y[m]	Z[m]	Type	Loadvalue
Point			37.400	7.675	0.000	PG	50.0 [kN]
	gar 1100				activated		100.00 percent
Point			38.600	7.675	0.000	PG	50.0 [kN]
	gar 2100				activated		100.00 percent
Point			37.400	9.675	0.000	PG	50.0 [kN]
	gar 1900				activated		100.00 percent
Point			38.600	9.675	0.000	PG	50.0 [kN]
	gar 2900				activated		100.00 percent

SOFiSTiK AG - www.sofistik.de

Composite bridge 38+50+38, b=14.25m, 2x2HL1100R HISTAR460 , slab 0.30m C30/37
Obciazenia zmienne

Load Case 420 (L_1) K-EN-R

Factor forces and moments	1.000	
unfavourable safety factor	1.500	
favourable safety factor	0.000	
Combination coefficient ψ-0	0.750	(rare)
Combination coefficient ψ-1'	0.800	(non frequent)
Combination coefficient ψ-1	0.750	(frequent)
Combination coefficient ψ-2	0.200	(permanent)

Loads

Kind	Referenceto	Projection W[m]	Coordinates X[m]	Y[m]	Z[m]	Type	Loadvalue
Point			37.400	7.675	0.000	PG	50.0 [kN]
	gar 1100				activated		100.00 percent
Point			38.600	7.675	0.000	PG	50.0 [kN]
	gar 2100				activated		100.00 percent
Point			37.400	9.675	0.000	PG	50.0 [kN]
	gar 1900				activated		100.00 percent
Point			38.600	9.675	0.000	PG	50.0 [kN]
	gar 2900				activated		100.00 percent

Load Case 421 (L_1) K-EN-R

Factor forces and moments	1.000	
unfavourable safety factor	1.500	
favourable safety factor	0.000	
Combination coefficient ψ-0	0.750	(rare)
Combination coefficient ψ-1'	0.800	(non frequent)
Combination coefficient ψ-1	0.750	(frequent)
Combination coefficient ψ-2	0.200	(permanent)

Loads

Kind	Referenceto	Projection W[m]	Coordinates X[m]	Y[m]	Z[m]	Type	Loadvalue
Point			42.956	7.675	0.000	PG	50.0 [kN]
	gar 2100				activated		100.00 percent
Point			44.156	7.675	0.000	PG	50.0 [kN]
	gar 2100				activated		100.00 percent
Point			42.956	9.675	0.000	PG	50.0 [kN]
	gar 2900				activated		100.00 percent
Point			44.156	9.675	0.000	PG	50.0 [kN]
	gar 2900				activated		100.00 percent

Load Case 422 (L_1) K-EN-R

Factor forces and moments	1.000	
unfavourable safety factor	1.500	
favourable safety factor	0.000	
Combination coefficient ψ-0	0.750	(rare)
Combination coefficient ψ-1'	0.800	(non frequent)
Combination coefficient ψ-1	0.750	(frequent)
Combination coefficient ψ-2	0.200	(permanent)

Loads

Kind	Referenceto	Projection W[m]	Coordinates X[m]	Y[m]	Z[m]	Type	Loadvalue
Point			48.511	7.675	0.000	PG	50.0 [kN]
	gar 2100				activated		100.00 percent
Point			49.711	7.675	0.000	PG	50.0 [kN]
	gar 2100				activated		100.00 percent
Point			48.511	9.675	0.000	PG	50.0 [kN]
	gar 2900				activated		100.00 percent
Point			49.711	9.675	0.000	PG	50.0 [kN]
	gar 2900				activated		100.00 percent

SOFiSTiK AG - www.sofistik.de

Composite bridge 38+50+38, b=14.25m, 2x2HL1100R HISTAR460 , slab 0.30m C30/37
Obciazenia zmienne

Load Case 423 (L_1) K-EN-R

Factor forces and moments	1.000	
unfavourable safety factor	1.500	
favourable safety factor	0.000	
Combination coefficient ψ-0	0.750	(rare)
Combination coefficient ψ-1'	0.800	(non frequent)
Combination coefficient ψ-1	0.750	(frequent)
Combination coefficient ψ-2	0.200	(permanent)

Loads

Kind	Referenceto	Projection W[m]	Coordinates X[m]	Y[m]	Z[m]	Type	Loadvalue
Point			54.067	7.675	0.000	PG	50.0 [kN]
	gar	2100			activated		100.00 percent
Point			55.267	7.675	0.000	PG	50.0 [kN]
	gar	2100			activated		100.00 percent
Point			54.067	9.675	0.000	PG	50.0 [kN]
	gar	2900			activated		100.00 percent
Point			55.267	9.675	0.000	PG	50.0 [kN]
	gar	2900			activated		100.00 percent

Load Case 424 (L_1) K-EN-R

Factor forces and moments	1.000	
unfavourable safety factor	1.500	
favourable safety factor	0.000	
Combination coefficient ψ-0	0.750	(rare)
Combination coefficient ψ-1'	0.800	(non frequent)
Combination coefficient ψ-1	0.750	(frequent)
Combination coefficient ψ-2	0.200	(permanent)

Loads

Kind	Referenceto	Projection W[m]	Coordinates X[m]	Y[m]	Z[m]	Type	Loadvalue
Point			59.622	7.675	0.000	PG	50.0 [kN]
	gar	2100			activated		100.00 percent
Point			60.822	7.675	0.000	PG	50.0 [kN]
	gar	2100			activated		100.00 percent
Point			59.622	9.675	0.000	PG	50.0 [kN]
	gar	2900			activated		100.00 percent
Point			60.822	9.675	0.000	PG	50.0 [kN]
	gar	2900			activated		100.00 percent

Load Case 425 (L_1) K-EN-R

Factor forces and moments	1.000	
unfavourable safety factor	1.500	
favourable safety factor	0.000	
Combination coefficient ψ-0	0.750	(rare)
Combination coefficient ψ-1'	0.800	(non frequent)
Combination coefficient ψ-1	0.750	(frequent)
Combination coefficient ψ-2	0.200	(permanent)

Loads

Kind	Referenceto	Projection W[m]	Coordinates X[m]	Y[m]	Z[m]	Type	Loadvalue
Point			65.178	7.675	0.000	PG	50.0 [kN]
	gar	2100			activated		100.00 percent
Point			66.378	7.675	0.000	PG	50.0 [kN]
	gar	2100			activated		100.00 percent
Point			65.178	9.675	0.000	PG	50.0 [kN]
	gar	2900			activated		100.00 percent
Point			66.378	9.675	0.000	PG	50.0 [kN]
	gar	2900			activated		100.00 percent

SOFiSTiK AG - www.sofistik.de

Composite bridge 38+50+38, b=14.25m, 2x2HL1100R HISTAR460 , slab 0.30m C30/37
Obciazenia zmienne

Load Case 426 (L_1) K-EN-R

Factor forces and moments	1.000	
unfavourable safety factor	1.500	
favourable safety factor	0.000	
Combination coefficient ψ-0	0.750	(rare)
Combination coefficient ψ-1'	0.800	(non frequent)
Combination coefficient ψ-1	0.750	(frequent)
Combination coefficient ψ-2	0.200	(permanent)

Loads

Kind	Referenceto	Projection W[m]	Coordinates X[m]	Y[m]	Z[m]	Type	Loadvalue
Point			70.733	7.675	0.000	PG	50.0 [kN]
	gar	2100			activated		100.00 percent
Point			71.933	7.675	0.000	PG	50.0 [kN]
	gar	2100			activated		100.00 percent
Point			70.733	9.675	0.000	PG	50.0 [kN]
	gar	2900			activated		100.00 percent
Point			71.933	9.675	0.000	PG	50.0 [kN]
	gar	2900			activated		100.00 percent

Load Case 427 (L_1) K-EN-R

Factor forces and moments	1.000	
unfavourable safety factor	1.500	
favourable safety factor	0.000	
Combination coefficient ψ-0	0.750	(rare)
Combination coefficient ψ-1'	0.800	(non frequent)
Combination coefficient ψ-1	0.750	(frequent)
Combination coefficient ψ-2	0.200	(permanent)

Loads

Kind	Referenceto	Projection W[m]	Coordinates X[m]	Y[m]	Z[m]	Type	Loadvalue
Point			76.289	7.675	0.000	PG	50.0 [kN]
	gar	2100			activated		100.00 percent
Point			77.489	7.675	0.000	PG	50.0 [kN]
	gar	2100			activated		100.00 percent
Point			76.289	9.675	0.000	PG	50.0 [kN]
	gar	2900			activated		100.00 percent
Point			77.489	9.675	0.000	PG	50.0 [kN]
	gar	2900			activated		100.00 percent

Load Case 428 (L_1) K-EN-R

Factor forces and moments	1.000	
unfavourable safety factor	1.500	
favourable safety factor	0.000	
Combination coefficient ψ-0	0.750	(rare)
Combination coefficient ψ-1'	0.800	(non frequent)
Combination coefficient ψ-1	0.750	(frequent)
Combination coefficient ψ-2	0.200	(permanent)

Loads

Kind	Referenceto	Projection W[m]	Coordinates X[m]	Y[m]	Z[m]	Type	Loadvalue
Point			81.844	7.675	0.000	PG	50.0 [kN]
	gar	2100			activated		100.00 percent
Point			83.044	7.675	0.000	PG	50.0 [kN]
	gar	2100			activated		100.00 percent
Point			81.844	9.675	0.000	PG	50.0 [kN]
	gar	2900			activated		100.00 percent
Point			83.044	9.675	0.000	PG	50.0 [kN]
	gar	2900			activated		100.00 percent

SOFiSTiK AG - www.sofistik.de

Composite bridge 38+50+38, b=14.25m, 2x2HL1100R HISTAR460 , slab 0.30m C30/37
Obciazenia zmienne

Load Case 429 (L_1) K-EN-R

Factor forces and moments	1.000	
unfavourable safety factor	1.500	
favourable safety factor	0.000	
Combination coefficient ψ-0	0.750	(rare)
Combination coefficient ψ-1'	0.800	(non frequent)
Combination coefficient ψ-1	0.750	(frequent)
Combination coefficient ψ-2	0.200	(permanent)

Loads

Kind	Referenceto	Projection W[m]	Coordinates X[m]	Y[m]	Z[m]	Type	Loadvalue
Point			87.400	7.675	0.000	PG	50.0 [kN]
	gar	2100			activated		100.00 percent
Point			88.600	7.675	0.000	PG	50.0 [kN]
	gar	3100			activated		100.00 percent
Point			87.400	9.675	0.000	PG	50.0 [kN]
	gar	2900			activated		100.00 percent
Point			88.600	9.675	0.000	PG	50.0 [kN]
	gar	3900			activated		100.00 percent

Load Case 430 (L_1) K-EN-R

Factor forces and moments	1.000	
unfavourable safety factor	1.500	
favourable safety factor	0.000	
Combination coefficient ψ-0	0.750	(rare)
Combination coefficient ψ-1'	0.800	(non frequent)
Combination coefficient ψ-1	0.750	(frequent)
Combination coefficient ψ-2	0.200	(permanent)

Loads

Kind	Referenceto	Projection W[m]	Coordinates X[m]	Y[m]	Z[m]	Type	Loadvalue
Point			87.400	7.675	0.000	PG	50.0 [kN]
	gar	2100			activated		100.00 percent
Point			88.600	7.675	0.000	PG	50.0 [kN]
	gar	3100			activated		100.00 percent
Point			87.400	9.675	0.000	PG	50.0 [kN]
	gar	2900			activated		100.00 percent
Point			88.600	9.675	0.000	PG	50.0 [kN]
	gar	3900			activated		100.00 percent

Load Case 431 (L_1) K-EN-R

Factor forces and moments	1.000	
unfavourable safety factor	1.500	
favourable safety factor	0.000	
Combination coefficient ψ-0	0.750	(rare)
Combination coefficient ψ-1'	0.800	(non frequent)
Combination coefficient ψ-1	0.750	(frequent)
Combination coefficient ψ-2	0.200	(permanent)

Loads

Kind	Referenceto	Projection W[m]	Coordinates X[m]	Y[m]	Z[m]	Type	Loadvalue
Point			91.622	7.675	0.000	PG	50.0 [kN]
	gar	3100			activated		100.00 percent
Point			92.822	7.675	0.000	PG	50.0 [kN]
	gar	3100			activated		100.00 percent
Point			91.622	9.675	0.000	PG	50.0 [kN]
	gar	3900			activated		100.00 percent
Point			92.822	9.675	0.000	PG	50.0 [kN]
	gar	3900			activated		100.00 percent

SOFiSTiK AG - www.sofistik.de

Composite bridge 38+50+38, b=14.25m, 2x2HL1100R HISTAR460 , slab 0.30m C30/37
Obciazenia zmienne

Load Case 432 (L_1) K-EN-R

Factor forces and moments	1.000	
unfavourable safety factor	1.500	
favourable safety factor	0.000	
Combination coefficient ψ-0	0.750	(rare)
Combination coefficient ψ-1'	0.800	(non frequent)
Combination coefficient ψ-1	0.750	(frequent)
Combination coefficient ψ-2	0.200	(permanent)

Loads

Kind	Referenceto	Projection W[m]	Coordinates X[m]	Y[m]	Z[m]	Type	Loadvalue
Point			95.844	7.675	0.000	PG	50.0 [kN]
	gar	3100			activated		100.00 percent
Point			97.044	7.675	0.000	PG	50.0 [kN]
	gar	3100			activated		100.00 percent
Point			95.844	9.675	0.000	PG	50.0 [kN]
	gar	3900			activated		100.00 percent
Point			97.044	9.675	0.000	PG	50.0 [kN]
	gar	3900			activated		100.00 percent

Load Case 433 (L_1) K-EN-R

Factor forces and moments	1.000	
unfavourable safety factor	1.500	
favourable safety factor	0.000	
Combination coefficient ψ-0	0.750	(rare)
Combination coefficient ψ-1'	0.800	(non frequent)
Combination coefficient ψ-1	0.750	(frequent)
Combination coefficient ψ-2	0.200	(permanent)

Loads

Kind	Referenceto	Projection W[m]	Coordinates X[m]	Y[m]	Z[m]	Type	Loadvalue
Point			100.067	7.675	0.000	PG	50.0 [kN]
	gar	3100			activated		100.00 percent
Point			101.267	7.675	0.000	PG	50.0 [kN]
	gar	3100			activated		100.00 percent
Point			100.067	9.675	0.000	PG	50.0 [kN]
	gar	3900			activated		100.00 percent
Point			101.267	9.675	0.000	PG	50.0 [kN]
	gar	3900			activated		100.00 percent

Load Case 434 (L_1) K-EN-R

Factor forces and moments	1.000	
unfavourable safety factor	1.500	
favourable safety factor	0.000	
Combination coefficient ψ-0	0.750	(rare)
Combination coefficient ψ-1'	0.800	(non frequent)
Combination coefficient ψ-1	0.750	(frequent)
Combination coefficient ψ-2	0.200	(permanent)

Loads

Kind	Referenceto	Projection W[m]	Coordinates X[m]	Y[m]	Z[m]	Type	Loadvalue
Point			104.289	7.675	0.000	PG	50.0 [kN]
	gar	3100			activated		100.00 percent
Point			105.489	7.675	0.000	PG	50.0 [kN]
	gar	3100			activated		100.00 percent
Point			104.289	9.675	0.000	PG	50.0 [kN]
	gar	3900			activated		100.00 percent
Point			105.489	9.675	0.000	PG	50.0 [kN]
	gar	3900			activated		100.00 percent

SOFiSTiK AG - www.sofistik.de

Composite bridge 38+50+38, b=14.25m, 2x2HL1100R HISTAR460 , slab 0.30m C30/37
Obciazenia zmienne

Load Case 435 (L_1) K-EN-R

Factor forces and moments	1.000	
unfavourable safety factor	1.500	
favourable safety factor	0.000	
Combination coefficient ψ-0	0.750	(rare)
Combination coefficient ψ-1'	0.800	(non frequent)
Combination coefficient ψ-1	0.750	(frequent)
Combination coefficient ψ-2	0.200	(permanent)

Loads

Kind	Referenceto	Projection W[m]	Coordinates X[m]	Y[m]	Z[m]	Type	Loadvalue
Point			108.511	7.675	0.000	PG	50.0 [kN]
	gar	3100			activated		100.00 percent
Point			109.711	7.675	0.000	PG	50.0 [kN]
	gar	3100			activated		100.00 percent
Point			108.511	9.675	0.000	PG	50.0 [kN]
	gar	3900			activated		100.00 percent
Point			109.711	9.675	0.000	PG	50.0 [kN]
	gar	3900			activated		100.00 percent

Load Case 436 (L_1) K-EN-R

Factor forces and moments	1.000	
unfavourable safety factor	1.500	
favourable safety factor	0.000	
Combination coefficient ψ-0	0.750	(rare)
Combination coefficient ψ-1'	0.800	(non frequent)
Combination coefficient ψ-1	0.750	(frequent)
Combination coefficient ψ-2	0.200	(permanent)

Loads

Kind	Referenceto	Projection W[m]	Coordinates X[m]	Y[m]	Z[m]	Type	Loadvalue
Point			112.733	7.675	0.000	PG	50.0 [kN]
	gar	3100			activated		100.00 percent
Point			113.933	7.675	0.000	PG	50.0 [kN]
	gar	3100			activated		100.00 percent
Point			112.733	9.675	0.000	PG	50.0 [kN]
	gar	3900			activated		100.00 percent
Point			113.933	9.675	0.000	PG	50.0 [kN]
	gar	3900			activated		100.00 percent

Load Case 437 (L_1) K-EN-R

Factor forces and moments	1.000	
unfavourable safety factor	1.500	
favourable safety factor	0.000	
Combination coefficient ψ-0	0.750	(rare)
Combination coefficient ψ-1'	0.800	(non frequent)
Combination coefficient ψ-1	0.750	(frequent)
Combination coefficient ψ-2	0.200	(permanent)

Loads

Kind	Referenceto	Projection W[m]	Coordinates X[m]	Y[m]	Z[m]	Type	Loadvalue
Point			116.956	7.675	0.000	PG	50.0 [kN]
	gar	3100			activated		100.00 percent
Point			118.156	7.675	0.000	PG	50.0 [kN]
	gar	3100			activated		100.00 percent
Point			116.956	9.675	0.000	PG	50.0 [kN]
	gar	3900			activated		100.00 percent
Point			118.156	9.675	0.000	PG	50.0 [kN]
	gar	3900			activated		100.00 percent

SOFiSTiK AG - www.sofistik.de

Composite bridge 38+50+38, b=14.25m, 2x2HL1100R HISTAR460 , slab 0.30m C30/37
Obciazenia zmienne

Load Case 438 (L_1) K-EN-R

```
Factor forces and moments          1.000
unfavourable safety factor         1.500
favourable safety factor           0.000
Combination coefficient ψ-0        0.750 (rare)
Combination coefficient ψ-1'       0.800 (non frequent)
Combination coefficient ψ-1        0.750 (frequent)
Combination coefficient ψ-2        0.200 (permanent)
```

Loads

```
Kind    Referenceto  Projection Coordinates                 Type Loadvalue
                          W[m]     X[m]     Y[m]     Z[m]
Point                            121.178    7.675    0.000 PG        50.0 [kN]
        gar    3100                              activated        100.00 percent
Point                            122.378    7.675    0.000 PG        50.0 [kN]
        gar    3100                              activated        100.00 percent
Point                            121.178    9.675    0.000 PG        50.0 [kN]
        gar    3900                              activated        100.00 percent
Point                            122.378    9.675    0.000 PG        50.0 [kN]
        gar    3900                              activated        100.00 percent
```

Load Case 439 (L_1) K-EN-R

```
Factor forces and moments          1.000
unfavourable safety factor         1.500
favourable safety factor           0.000
Combination coefficient ψ-0        0.750 (rare)
Combination coefficient ψ-1'       0.800 (non frequent)
Combination coefficient ψ-1        0.750 (frequent)
Combination coefficient ψ-2        0.200 (permanent)
```

Loads

```
Kind    Referenceto  Projection Coordinates                 Type Loadvalue
                          W[m]     X[m]     Y[m]     Z[m]
Point                            125.400    7.675    0.000 PG        50.0 [kN]
        gar    3100                              activated        100.00 percent
Point                            126.600    7.675    0.000 PG        50.0 [kN]
        auto ????                   (--)         activated          0.00 percent
Point                            125.400    9.675    0.000 PG        50.0 [kN]
        gar    3900                              activated        100.00 percent
Point                            126.600    9.675    0.000 PG        50.0 [kN]
        auto ????                   (--)         activated          0.00 percent
+++++ warning no.   185 in program ASE/SOFILOAD
LC-no  439 some free loads could not be completely covered,
load near hole or edge - please check SOFILOAD - loadcoordinates and projection
```

Load Case 510 (L_1) K-EN-R

```
Factor forces and moments          1.000
unfavourable safety factor         1.500
favourable safety factor           0.000
Combination coefficient ψ-0        0.750 (rare)
Combination coefficient ψ-1'       0.800 (non frequent)
Combination coefficient ψ-1        0.750 (frequent)
Combination coefficient ψ-2        0.200 (permanent)
```

Loads

```
Kind    Referenceto  Projection Coordinates                 Type Loadvalue
                          W[m]     X[m]     Y[m]     Z[m]
Point                             -0.600    4.675    0.000 PG        50.0 [kN]
        auto ????                   (--)         activated          0.00 percent
Point                              0.600    4.675    0.000 PG        50.0 [kN]
        gar    1100                              activated        100.00 percent
Point                             -0.600    6.675    0.000 PG        50.0 [kN]
        auto ????                   (--)         activated          0.00 percent
Point                              0.600    6.675    0.000 PG        50.0 [kN]
        gar    1100                              activated        100.00 percent
```

SOFiSTiK AG - www.sofistik.de

Composite bridge 38+50+38, b=14.25m, 2x2HL1100R HISTAR460 , slab 0.30m C30/37
Obciazenia zmienne

+++++ warning no. 185 in program ASE/SOFILOAD
LC-no 510 some free loads could not be completely covered,
load near hole or edge - please check SOFILOAD - loadcoordinates and projection

Load Case 511 (L_1) K-EN-R

Factor forces and moments	1.000	
unfavourable safety factor	1.500	
favourable safety factor	0.000	
Combination coefficient ψ-0	0.750	(rare)
Combination coefficient ψ-1'	0.800	(non frequent)
Combination coefficient ψ-1	0.750	(frequent)
Combination coefficient ψ-2	0.200	(permanent)

Loads

Kind	Referenceto	Projection W[m]	Coordinates X[m]	Y[m]	Z[m]	Type	Loadvalue
Point			3.622	4.675	0.000	PG	50.0 [kN]
	gar 1100				activated		100.00 percent
Point			4.822	4.675	0.000	PG	50.0 [kN]
	gar 1100				activated		100.00 percent
Point			3.622	6.675	0.000	PG	50.0 [kN]
	gar 1100				activated		100.00 percent
Point			4.822	6.675	0.000	PG	50.0 [kN]
	gar 1100				activated		100.00 percent

Load Case 512 (L_1) K-EN-R

Factor forces and moments	1.000	
unfavourable safety factor	1.500	
favourable safety factor	0.000	
Combination coefficient ψ-0	0.750	(rare)
Combination coefficient ψ-1'	0.800	(non frequent)
Combination coefficient ψ-1	0.750	(frequent)
Combination coefficient ψ-2	0.200	(permanent)

Loads

Kind	Referenceto	Projection W[m]	Coordinates X[m]	Y[m]	Z[m]	Type	Loadvalue
Point			7.844	4.675	0.000	PG	50.0 [kN]
	gar 1100				activated		100.00 percent
Point			9.044	4.675	0.000	PG	50.0 [kN]
	gar 1100				activated		100.00 percent
Point			7.844	6.675	0.000	PG	50.0 [kN]
	gar 1100				activated		100.00 percent
Point			9.044	6.675	0.000	PG	50.0 [kN]
	gar 1100				activated		100.00 percent

Load Case 513 (L_1) K-EN-R

Factor forces and moments	1.000	
unfavourable safety factor	1.500	
favourable safety factor	0.000	
Combination coefficient ψ-0	0.750	(rare)
Combination coefficient ψ-1'	0.800	(non frequent)
Combination coefficient ψ-1	0.750	(frequent)
Combination coefficient ψ-2	0.200	(permanent)

Loads

Kind	Referenceto	Projection W[m]	Coordinates X[m]	Y[m]	Z[m]	Type	Loadvalue
Point			12.067	4.675	0.000	PG	50.0 [kN]
	gar 1100				activated		100.00 percent
Point			13.267	4.675	0.000	PG	50.0 [kN]
	gar 1100				activated		100.00 percent
Point			12.067	6.675	0.000	PG	50.0 [kN]
	gar 1100				activated		100.00 percent
Point			13.267	6.675	0.000	PG	50.0 [kN]
	gar 1100				activated		100.00 percent

SOFiSTiK AG - www.sofistik.de

Composite bridge 38+50+38, b=14.25m, 2x2HL1100R HISTAR460 , slab 0.30m C30/37
Obciazenia zmienne

Load Case 514 (L_1) K-EN-R

Factor forces and moments	1.000	
unfavourable safety factor	1.500	
favourable safety factor	0.000	
Combination coefficient ψ-0	0.750	(rare)
Combination coefficient ψ-1'	0.800	(non frequent)
Combination coefficient ψ-1	0.750	(frequent)
Combination coefficient ψ-2	0.200	(permanent)

Loads

Kind	Referenceto	Projection W[m]	Coordinates X[m]	Y[m]	Z[m]	Type	Loadvalue
Point			16.289	4.675	0.000	PG	50.0 [kN]
	gar	1100			activated		100.00 percent
Point			17.489	4.675	0.000	PG	50.0 [kN]
	gar	1100			activated		100.00 percent
Point			16.289	6.675	0.000	PG	50.0 [kN]
	gar	1100			activated		100.00 percent
Point			17.489	6.675	0.000	PG	50.0 [kN]
	gar	1100			activated		100.00 percent

Load Case 515 (L_1) K-EN-R

Factor forces and moments	1.000	
unfavourable safety factor	1.500	
favourable safety factor	0.000	
Combination coefficient ψ-0	0.750	(rare)
Combination coefficient ψ-1'	0.800	(non frequent)
Combination coefficient ψ-1	0.750	(frequent)
Combination coefficient ψ-2	0.200	(permanent)

Loads

Kind	Referenceto	Projection W[m]	Coordinates X[m]	Y[m]	Z[m]	Type	Loadvalue
Point			20.511	4.675	0.000	PG	50.0 [kN]
	gar	1100			activated		100.00 percent
Point			21.711	4.675	0.000	PG	50.0 [kN]
	gar	1100			activated		100.00 percent
Point			20.511	6.675	0.000	PG	50.0 [kN]
	gar	1100			activated		100.00 percent
Point			21.711	6.675	0.000	PG	50.0 [kN]
	gar	1100			activated		100.00 percent

Load Case 516 (L_1) K-EN-R

Factor forces and moments	1.000	
unfavourable safety factor	1.500	
favourable safety factor	0.000	
Combination coefficient ψ-0	0.750	(rare)
Combination coefficient ψ-1'	0.800	(non frequent)
Combination coefficient ψ-1	0.750	(frequent)
Combination coefficient ψ-2	0.200	(permanent)

Loads

Kind	Referenceto	Projection W[m]	Coordinates X[m]	Y[m]	Z[m]	Type	Loadvalue
Point			24.733	4.675	0.000	PG	50.0 [kN]
	gar	1100			activated		100.00 percent
Point			25.933	4.675	0.000	PG	50.0 [kN]
	gar	1100			activated		100.00 percent
Point			24.733	6.675	0.000	PG	50.0 [kN]
	gar	1100			activated		100.00 percent
Point			25.933	6.675	0.000	PG	50.0 [kN]
	gar	1100			activated		100.00 percent

SOFiSTiK AG - www.sofistik.de

Composite bridge 38+50+38, b=14.25m, 2x2HL1100R HISTAR460 , slab 0.30m C30/37
Obciazenia zmienne

Load Case 517 (L_1) K-EN-R

Factor forces and moments	1.000	
unfavourable safety factor	1.500	
favourable safety factor	0.000	
Combination coefficient ψ-0	0.750	(rare)
Combination coefficient ψ-1'	0.800	(non frequent)
Combination coefficient ψ-1	0.750	(frequent)
Combination coefficient ψ-2	0.200	(permanent)

Loads

Kind	Referenceto	Projection W[m]	Coordinates X[m]	Y[m]	Z[m]	Type	Loadvalue
Point			28.956	4.675	0.000	PG	50.0 [kN]
	gar	1100			activated		100.00 percent
Point			30.156	4.675	0.000	PG	50.0 [kN]
	gar	1100			activated		100.00 percent
Point			28.956	6.675	0.000	PG	50.0 [kN]
	gar	1100			activated		100.00 percent
Point			30.156	6.675	0.000	PG	50.0 [kN]
	gar	1100			activated		100.00 percent

Load Case 518 (L_1) K-EN-R

Factor forces and moments	1.000	
unfavourable safety factor	1.500	
favourable safety factor	0.000	
Combination coefficient ψ-0	0.750	(rare)
Combination coefficient ψ-1'	0.800	(non frequent)
Combination coefficient ψ-1	0.750	(frequent)
Combination coefficient ψ-2	0.200	(permanent)

Loads

Kind	Referenceto	Projection W[m]	Coordinates X[m]	Y[m]	Z[m]	Type	Loadvalue
Point			33.178	4.675	0.000	PG	50.0 [kN]
	gar	1100			activated		100.00 percent
Point			34.378	4.675	0.000	PG	50.0 [kN]
	gar	1100			activated		100.00 percent
Point			33.178	6.675	0.000	PG	50.0 [kN]
	gar	1100			activated		100.00 percent
Point			34.378	6.675	0.000	PG	50.0 [kN]
	gar	1100			activated		100.00 percent

Load Case 519 (L_1) K-EN-R

Factor forces and moments	1.000	
unfavourable safety factor	1.500	
favourable safety factor	0.000	
Combination coefficient ψ-0	0.750	(rare)
Combination coefficient ψ-1'	0.800	(non frequent)
Combination coefficient ψ-1	0.750	(frequent)
Combination coefficient ψ-2	0.200	(permanent)

Loads

Kind	Referenceto	Projection W[m]	Coordinates X[m]	Y[m]	Z[m]	Type	Loadvalue
Point			37.400	4.675	0.000	PG	50.0 [kN]
	gar	1100			activated		100.00 percent
Point			38.600	4.675	0.000	PG	50.0 [kN]
	gar	2100			activated		100.00 percent
Point			37.400	6.675	0.000	PG	50.0 [kN]
	gar	1100			activated		100.00 percent
Point			38.600	6.675	0.000	PG	50.0 [kN]
	gar	2100			activated		100.00 percent

SOFiSTiK AG - www.sofistik.de

Composite bridge 38+50+38, b=14.25m, 2x2HL1100R HISTAR460 , slab 0.30m C30/37
Obciazenia zmienne

Load Case 520 (L_1) K-EN-R

Factor forces and moments	1.000	
unfavourable safety factor	1.500	
favourable safety factor	0.000	
Combination coefficient ψ-0	0.750	(rare)
Combination coefficient ψ-1'	0.800	(non frequent)
Combination coefficient ψ-1	0.750	(frequent)
Combination coefficient ψ-2	0.200	(permanent)

Loads

Kind	Referenceto	Projection W[m]	Coordinates X[m]	Y[m]	Z[m]	Type	Loadvalue
Point			37.400	4.675	0.000	PG	50.0 [kN]
	gar 1100				activated		100.00 percent
Point			38.600	4.675	0.000	PG	50.0 [kN]
	gar 2100				activated		100.00 percent
Point			37.400	6.675	0.000	PG	50.0 [kN]
	gar 1100				activated		100.00 percent
Point			38.600	6.675	0.000	PG	50.0 [kN]
	gar 2100				activated		100.00 percent

Load Case 521 (L_1) K-EN-R

Factor forces and moments	1.000	
unfavourable safety factor	1.500	
favourable safety factor	0.000	
Combination coefficient ψ-0	0.750	(rare)
Combination coefficient ψ-1'	0.800	(non frequent)
Combination coefficient ψ-1	0.750	(frequent)
Combination coefficient ψ-2	0.200	(permanent)

Loads

Kind	Referenceto	Projection W[m]	Coordinates X[m]	Y[m]	Z[m]	Type	Loadvalue
Point			42.956	4.675	0.000	PG	50.0 [kN]
	gar 2100				activated		100.00 percent
Point			44.156	4.675	0.000	PG	50.0 [kN]
	gar 2100				activated		100.00 percent
Point			42.956	6.675	0.000	PG	50.0 [kN]
	gar 2100				activated		100.00 percent
Point			44.156	6.675	0.000	PG	50.0 [kN]
	gar 2100				activated		100.00 percent

Load Case 522 (L_1) K-EN-R

Factor forces and moments	1.000	
unfavourable safety factor	1.500	
favourable safety factor	0.000	
Combination coefficient ψ-0	0.750	(rare)
Combination coefficient ψ-1'	0.800	(non frequent)
Combination coefficient ψ-1	0.750	(frequent)
Combination coefficient ψ-2	0.200	(permanent)

Loads

Kind	Referenceto	Projection W[m]	Coordinates X[m]	Y[m]	Z[m]	Type	Loadvalue
Point			48.511	4.675	0.000	PG	50.0 [kN]
	gar 2100				activated		100.00 percent
Point			49.711	4.675	0.000	PG	50.0 [kN]
	gar 2100				activated		100.00 percent
Point			48.511	6.675	0.000	PG	50.0 [kN]
	gar 2100				activated		100.00 percent
Point			49.711	6.675	0.000	PG	50.0 [kN]
	gar 2100				activated		100.00 percent

SOFiSTiK AG - www.sofistik.de

Composite bridge 38+50+38, b=14.25m, 2x2HL1100R HISTAR460 , slab 0.30m C30/37
Obciazenia zmienne

Load Case 523 (L_1) K-EN-R

Factor forces and moments	1.000	
unfavourable safety factor	1.500	
favourable safety factor	0.000	
Combination coefficient ψ-0	0.750	(rare)
Combination coefficient ψ-1'	0.800	(non frequent)
Combination coefficient ψ-1	0.750	(frequent)
Combination coefficient ψ-2	0.200	(permanent)

Loads

Kind	Referenceto	Projection W[m]	Coordinates X[m]	Y[m]	Z[m]	Type	Loadvalue
Point			54.067	4.675	0.000	PG	50.0 [kN]
	gar	2100			activated		100.00 percent
Point			55.267	4.675	0.000	PG	50.0 [kN]
	gar	2100			activated		100.00 percent
Point			54.067	6.675	0.000	PG	50.0 [kN]
	gar	2100			activated		100.00 percent
Point			55.267	6.675	0.000	PG	50.0 [kN]
	gar	2100			activated		100.00 percent

Load Case 524 (L_1) K-EN-R

Factor forces and moments	1.000	
unfavourable safety factor	1.500	
favourable safety factor	0.000	
Combination coefficient ψ-0	0.750	(rare)
Combination coefficient ψ-1'	0.800	(non frequent)
Combination coefficient ψ-1	0.750	(frequent)
Combination coefficient ψ-2	0.200	(permanent)

Loads

Kind	Referenceto	Projection W[m]	Coordinates X[m]	Y[m]	Z[m]	Type	Loadvalue
Point			59.622	4.675	0.000	PG	50.0 [kN]
	gar	2100			activated		100.00 percent
Point			60.822	4.675	0.000	PG	50.0 [kN]
	gar	2100			activated		100.00 percent
Point			59.622	6.675	0.000	PG	50.0 [kN]
	gar	2100			activated		100.00 percent
Point			60.822	6.675	0.000	PG	50.0 [kN]
	gar	2100			activated		100.00 percent

Load Case 525 (L_1) K-EN-R

Factor forces and moments	1.000	
unfavourable safety factor	1.500	
favourable safety factor	0.000	
Combination coefficient ψ-0	0.750	(rare)
Combination coefficient ψ-1'	0.800	(non frequent)
Combination coefficient ψ-1	0.750	(frequent)
Combination coefficient ψ-2	0.200	(permanent)

Loads

Kind	Referenceto	Projection W[m]	Coordinates X[m]	Y[m]	Z[m]	Type	Loadvalue
Point			65.178	4.675	0.000	PG	50.0 [kN]
	gar	2100			activated		100.00 percent
Point			66.378	4.675	0.000	PG	50.0 [kN]
	gar	2100			activated		100.00 percent
Point			65.178	6.675	0.000	PG	50.0 [kN]
	gar	2100			activated		100.00 percent
Point			66.378	6.675	0.000	PG	50.0 [kN]
	gar	2100			activated		100.00 percent

SOFiSTiK AG - www.sofistik.de

Composite bridge 38+50+38, b=14.25m, 2x2HL1100R HISTAR460 , slab 0.30m C30/37
Obciazenia zmienne

Load Case 526 (L_1) K-EN-R

Factor forces and moments	1.000	
unfavourable safety factor	1.500	
favourable safety factor	0.000	
Combination coefficient ψ-0	0.750	(rare)
Combination coefficient ψ-1'	0.800	(non frequent)
Combination coefficient ψ-1	0.750	(frequent)
Combination coefficient ψ-2	0.200	(permanent)

Loads

Kind	Referenceto	Projection W[m]	Coordinates X[m]	Y[m]	Z[m]	Type	Loadvalue
Point			70.733	4.675	0.000	PG	50.0 [kN]
	gar	2100			activated		100.00 percent
Point			71.933	4.675	0.000	PG	50.0 [kN]
	gar	2100			activated		100.00 percent
Point			70.733	6.675	0.000	PG	50.0 [kN]
	gar	2100			activated		100.00 percent
Point			71.933	6.675	0.000	PG	50.0 [kN]
	gar	2100			activated		100.00 percent

Load Case 527 (L_1) K-EN-R

Factor forces and moments	1.000	
unfavourable safety factor	1.500	
favourable safety factor	0.000	
Combination coefficient ψ-0	0.750	(rare)
Combination coefficient ψ-1'	0.800	(non frequent)
Combination coefficient ψ-1	0.750	(frequent)
Combination coefficient ψ-2	0.200	(permanent)

Loads

Kind	Referenceto	Projection W[m]	Coordinates X[m]	Y[m]	Z[m]	Type	Loadvalue
Point			76.289	4.675	0.000	PG	50.0 [kN]
	gar	2100			activated		100.00 percent
Point			77.489	4.675	0.000	PG	50.0 [kN]
	gar	2100			activated		100.00 percent
Point			76.289	6.675	0.000	PG	50.0 [kN]
	gar	2100			activated		100.00 percent
Point			77.489	6.675	0.000	PG	50.0 [kN]
	gar	2100			activated		100.00 percent

Load Case 528 (L_1) K-EN-R

Factor forces and moments	1.000	
unfavourable safety factor	1.500	
favourable safety factor	0.000	
Combination coefficient ψ-0	0.750	(rare)
Combination coefficient ψ-1'	0.800	(non frequent)
Combination coefficient ψ-1	0.750	(frequent)
Combination coefficient ψ-2	0.200	(permanent)

Loads

Kind	Referenceto	Projection W[m]	Coordinates X[m]	Y[m]	Z[m]	Type	Loadvalue
Point			81.844	4.675	0.000	PG	50.0 [kN]
	gar	2100			activated		100.00 percent
Point			83.044	4.675	0.000	PG	50.0 [kN]
	gar	2100			activated		100.00 percent
Point			81.844	6.675	0.000	PG	50.0 [kN]
	gar	2100			activated		100.00 percent
Point			83.044	6.675	0.000	PG	50.0 [kN]
	gar	2100			activated		100.00 percent

SOFiSTiK AG - www.sofistik.de

Composite bridge 38+50+38, b=14.25m, 2x2HL1100R HISTAR460 , slab 0.30m C30/37
Obciazenia zmienne

Load Case 529 (L_1) K-EN-R

Factor forces and moments	1.000	
unfavourable safety factor	1.500	
favourable safety factor	0.000	
Combination coefficient ψ-0	0.750	(rare)
Combination coefficient ψ-1'	0.800	(non frequent)
Combination coefficient ψ-1	0.750	(frequent)
Combination coefficient ψ-2	0.200	(permanent)

Loads

Kind	Referenceto	Projection W[m]	Coordinates X[m]	Y[m]	Z[m]	Type	Loadvalue
Point			87.400	4.675	0.000	PG	50.0 [kN]
	gar	2100			activated		100.00 percent
Point			88.600	4.675	0.000	PG	50.0 [kN]
	gar	3100			activated		100.00 percent
Point			87.400	6.675	0.000	PG	50.0 [kN]
	gar	2100			activated		100.00 percent
Point			88.600	6.675	0.000	PG	50.0 [kN]
	gar	3100			activated		100.00 percent

Load Case 530 (L_1) K-EN-R

Factor forces and moments	1.000	
unfavourable safety factor	1.500	
favourable safety factor	0.000	
Combination coefficient ψ-0	0.750	(rare)
Combination coefficient ψ-1'	0.800	(non frequent)
Combination coefficient ψ-1	0.750	(frequent)
Combination coefficient ψ-2	0.200	(permanent)

Loads

Kind	Referenceto	Projection W[m]	Coordinates X[m]	Y[m]	Z[m]	Type	Loadvalue
Point			87.400	4.675	0.000	PG	50.0 [kN]
	gar	2100			activated		100.00 percent
Point			88.600	4.675	0.000	PG	50.0 [kN]
	gar	3100			activated		100.00 percent
Point			87.400	6.675	0.000	PG	50.0 [kN]
	gar	2100			activated		100.00 percent
Point			88.600	6.675	0.000	PG	50.0 [kN]
	gar	3100			activated		100.00 percent

Load Case 531 (L_1) K-EN-R

Factor forces and moments	1.000	
unfavourable safety factor	1.500	
favourable safety factor	0.000	
Combination coefficient ψ-0	0.750	(rare)
Combination coefficient ψ-1'	0.800	(non frequent)
Combination coefficient ψ-1	0.750	(frequent)
Combination coefficient ψ-2	0.200	(permanent)

Loads

Kind	Referenceto	Projection W[m]	Coordinates X[m]	Y[m]	Z[m]	Type	Loadvalue
Point			91.622	4.675	0.000	PG	50.0 [kN]
	gar	3100			activated		100.00 percent
Point			92.822	4.675	0.000	PG	50.0 [kN]
	gar	3100			activated		100.00 percent
Point			91.622	6.675	0.000	PG	50.0 [kN]
	gar	3100			activated		100.00 percent
Point			92.822	6.675	0.000	PG	50.0 [kN]
	gar	3100			activated		100.00 percent

SOFiSTiK AG - www.sofistik.de

Composite bridge 38+50+38, b=14.25m, 2x2HL1100R HISTAR460 , slab 0.30m C30/37
Obciazenia zmienne

Load Case 532 (L_1) K-EN-R

Factor forces and moments	1.000	
unfavourable safety factor	1.500	
favourable safety factor	0.000	
Combination coefficient ψ-0	0.750	(rare)
Combination coefficient ψ-1'	0.800	(non frequent)
Combination coefficient ψ-1	0.750	(frequent)
Combination coefficient ψ-2	0.200	(permanent)

Loads

Kind	Referenceto	Projection W[m]	Coordinates X[m]	Y[m]	Z[m]	Type	Loadvalue
Point			95.844	4.675	0.000	PG	50.0 [kN]
	gar	3100			activated		100.00 percent
Point			97.044	4.675	0.000	PG	50.0 [kN]
	gar	3100			activated		100.00 percent
Point			95.844	6.675	0.000	PG	50.0 [kN]
	gar	3100			activated		100.00 percent
Point			97.044	6.675	0.000	PG	50.0 [kN]
	gar	3100			activated		100.00 percent

Load Case 533 (L_1) K-EN-R

Factor forces and moments	1.000	
unfavourable safety factor	1.500	
favourable safety factor	0.000	
Combination coefficient ψ-0	0.750	(rare)
Combination coefficient ψ-1'	0.800	(non frequent)
Combination coefficient ψ-1	0.750	(frequent)
Combination coefficient ψ-2	0.200	(permanent)

Loads

Kind	Referenceto	Projection W[m]	Coordinates X[m]	Y[m]	Z[m]	Type	Loadvalue
Point			100.067	4.675	0.000	PG	50.0 [kN]
	gar	3100			activated		100.00 percent
Point			101.267	4.675	0.000	PG	50.0 [kN]
	gar	3100			activated		100.00 percent
Point			100.067	6.675	0.000	PG	50.0 [kN]
	gar	3100			activated		100.00 percent
Point			101.267	6.675	0.000	PG	50.0 [kN]
	gar	3100			activated		100.00 percent

Load Case 534 (L_1) K-EN-R

Factor forces and moments	1.000	
unfavourable safety factor	1.500	
favourable safety factor	0.000	
Combination coefficient ψ-0	0.750	(rare)
Combination coefficient ψ-1'	0.800	(non frequent)
Combination coefficient ψ-1	0.750	(frequent)
Combination coefficient ψ-2	0.200	(permanent)

Loads

Kind	Referenceto	Projection W[m]	Coordinates X[m]	Y[m]	Z[m]	Type	Loadvalue
Point			104.289	4.675	0.000	PG	50.0 [kN]
	gar	3100			activated		100.00 percent
Point			105.489	4.675	0.000	PG	50.0 [kN]
	gar	3100			activated		100.00 percent
Point			104.289	6.675	0.000	PG	50.0 [kN]
	gar	3100			activated		100.00 percent
Point			105.489	6.675	0.000	PG	50.0 [kN]
	gar	3100			activated		100.00 percent

SOFiSTiK AG - www.sofistik.de

Composite bridge 38+50+38, b=14.25m, 2x2HL1100R HISTAR460 , slab 0.30m C30/37
Obciazenia zmienne

Load Case 535 (L_1) K-EN-R

Factor forces and moments	1.000	
unfavourable safety factor	1.500	
favourable safety factor	0.000	
Combination coefficient ψ-0	0.750	(rare)
Combination coefficient ψ-1'	0.800	(non frequent)
Combination coefficient ψ-1	0.750	(frequent)
Combination coefficient ψ-2	0.200	(permanent)

Loads

Kind	Referenceto	Projection W[m]	Coordinates X[m]	Y[m]	Z[m]	Type	Loadvalue
Point			108.511	4.675	0.000	PG	50.0 [kN]
	gar	3100			activated		100.00 percent
Point			109.711	4.675	0.000	PG	50.0 [kN]
	gar	3100			activated		100.00 percent
Point			108.511	6.675	0.000	PG	50.0 [kN]
	gar	3100			activated		100.00 percent
Point			109.711	6.675	0.000	PG	50.0 [kN]
	gar	3100			activated		100.00 percent

Load Case 536 (L_1) K-EN-R

Factor forces and moments	1.000	
unfavourable safety factor	1.500	
favourable safety factor	0.000	
Combination coefficient ψ-0	0.750	(rare)
Combination coefficient ψ-1'	0.800	(non frequent)
Combination coefficient ψ-1	0.750	(frequent)
Combination coefficient ψ-2	0.200	(permanent)

Loads

Kind	Referenceto	Projection W[m]	Coordinates X[m]	Y[m]	Z[m]	Type	Loadvalue
Point			112.733	4.675	0.000	PG	50.0 [kN]
	gar	3100			activated		100.00 percent
Point			113.933	4.675	0.000	PG	50.0 [kN]
	gar	3100			activated		100.00 percent
Point			112.733	6.675	0.000	PG	50.0 [kN]
	gar	3100			activated		100.00 percent
Point			113.933	6.675	0.000	PG	50.0 [kN]
	gar	3100			activated		100.00 percent

Load Case 537 (L_1) K-EN-R

Factor forces and moments	1.000	
unfavourable safety factor	1.500	
favourable safety factor	0.000	
Combination coefficient ψ-0	0.750	(rare)
Combination coefficient ψ-1'	0.800	(non frequent)
Combination coefficient ψ-1	0.750	(frequent)
Combination coefficient ψ-2	0.200	(permanent)

Loads

Kind	Referenceto	Projection W[m]	Coordinates X[m]	Y[m]	Z[m]	Type	Loadvalue
Point			116.956	4.675	0.000	PG	50.0 [kN]
	gar	3100			activated		100.00 percent
Point			118.156	4.675	0.000	PG	50.0 [kN]
	gar	3100			activated		100.00 percent
Point			116.956	6.675	0.000	PG	50.0 [kN]
	gar	3100			activated		100.00 percent
Point			118.156	6.675	0.000	PG	50.0 [kN]
	gar	3100			activated		100.00 percent

SOFiSTiK AG - www.sofistik.de

Composite bridge 38+50+38, b=14.25m, 2x2HL1100R HISTAR460 , slab 0.30m C30/37
Obciazenia zmienne

Load Case 538 (L_1) K-EN-R

```
Factor forces and moments          1.000
unfavourable safety factor         1.500
favourable safety factor           0.000
Combination coefficient ψ-0        0.750 (rare)
Combination coefficient ψ-1'       0.800 (non frequent)
Combination coefficient ψ-1        0.750 (frequent)
Combination coefficient ψ-2        0.200 (permanent)
```

Loads

```
Kind    Referenceto  Projection Coordinates                 Type Loadvalue
                          W[m]     X[m]     Y[m]     Z[m]
Point                            121.178    4.675    0.000 PG        50.0 [kN]
        gar    3100                                activated       100.00 percent
Point                            122.378    4.675    0.000 PG        50.0 [kN]
        gar    3100                                activated       100.00 percent
Point                            121.178    6.675    0.000 PG        50.0 [kN]
        gar    3100                                activated       100.00 percent
Point                            122.378    6.675    0.000 PG        50.0 [kN]
        gar    3100                                activated       100.00 percent
```

Load Case 539 (L_1) K-EN-R

```
Factor forces and moments          1.000
unfavourable safety factor         1.500
favourable safety factor           0.000
Combination coefficient ψ-0        0.750 (rare)
Combination coefficient ψ-1'       0.800 (non frequent)
Combination coefficient ψ-1        0.750 (frequent)
Combination coefficient ψ-2        0.200 (permanent)
```

Loads

```
Kind    Referenceto  Projection Coordinates                 Type Loadvalue
                          W[m]     X[m]     Y[m]     Z[m]
Point                            125.400    4.675    0.000 PG        50.0 [kN]
        gar    3100                                activated       100.00 percent
Point                            126.600    4.675    0.000 PG        50.0 [kN]
        auto ????                   (--)         activated         0.00 percent
Point                            125.400    6.675    0.000 PG        50.0 [kN]
        gar    3100                                activated       100.00 percent
Point                            126.600    6.675    0.000 PG        50.0 [kN]
        auto ????                   (--)         activated         0.00 percent
+++++ warning no.   185 in program ASE/SOFILOAD
LC-no  539 some free loads could not be completely covered,
load near hole or edge - please check SOFILOAD - loadcoordinates and projection
```

Load Case 711 (Q_1) q2.5-lane1-R

```
Factor forces and moments          1.000
unfavourable safety factor         1.500
favourable safety factor           0.000
Combination coefficient ψ-0        0.750 (rare)
Combination coefficient ψ-1'       0.800 (non frequent)
Combination coefficient ψ-1        0.750 (frequent)
Combination coefficient ψ-2        0.200 (permanent)
```

Loads

```
Kind    Referenceto  Projection Coordinates                 Type Loadvalue
                          W[m]     X[m]     Y[m]     Z[m]
Area                               0.000   10.175    0.000 Pz         2.50 [kN/m2]
                                  38.000   10.175    0.000           2.50 [kN/m2]
                                  38.000    7.175    0.000           2.50 [kN/m2]
                                   0.000    7.175    0.000           2.50 [kN/m2]
        gar  -mult-                                 activated       100.00 percent
```

SOFiSTiK AG - www.sofistik.de

Composite bridge 38+50+38, b=14.25m, 2x2HL1100R HISTAR460 , slab 0.30m C30/37
Obciazenia zmienne

Load Case 712 (Q_1) q2.5-lane2-R

Factor forces and moments	1.000	
unfavourable safety factor	1.500	
favourable safety factor	0.000	
Combination coefficient ψ-0	0.750	(rare)
Combination coefficient ψ-1'	0.800	(non frequent)
Combination coefficient ψ-1	0.750	(frequent)
Combination coefficient ψ-2	0.200	(permanent)

Loads

Kind	Referenceto	Projection W[m]	Coordinates X[m]	Y[m]	Z[m]	Type	Loadvalue
Area			0.000	7.175	0.000	Pz	2.50 [kN/m2]
			38.000	7.175	0.000		2.50 [kN/m2]
			38.000	4.175	0.000		2.50 [kN/m2]
			0.000	4.175	0.000		2.50 [kN/m2]
	gar	1100			activated		100.00 percent

Load Case 714 (Q_1) q2.5-remain-R

Factor forces and moments	1.000	
unfavourable safety factor	1.500	
favourable safety factor	0.000	
Combination coefficient ψ-0	0.750	(rare)
Combination coefficient ψ-1'	0.800	(non frequent)
Combination coefficient ψ-1	0.750	(frequent)
Combination coefficient ψ-2	0.200	(permanent)

Loads

Kind	Referenceto	Projection W[m]	Coordinates X[m]	Y[m]	Z[m]	Type	Loadvalue
Area			0.000	4.175	0.000	Pz	2.50 [kN/m2]
			38.000	4.175	0.000		2.50 [kN/m2]
			38.000	1.575	0.000		2.50 [kN/m2]
			0.000	1.575	0.000		2.50 [kN/m2]
	gar	1100			activated		100.00 percent

Load Case 715 (Q_1) deltaq6.5-lane1-R

Factor forces and moments	1.000	
unfavourable safety factor	1.500	
favourable safety factor	0.000	
Combination coefficient ψ-0	0.750	(rare)
Combination coefficient ψ-1'	0.800	(non frequent)
Combination coefficient ψ-1	0.750	(frequent)
Combination coefficient ψ-2	0.200	(permanent)

Loads

Kind	Referenceto	Projection W[m]	Coordinates X[m]	Y[m]	Z[m]	Type	Loadvalue
Area			0.000	10.175	0.000	Pz	6.50 [kN/m2]
			38.000	10.175	0.000		6.50 [kN/m2]
			38.000	7.175	0.000		6.50 [kN/m2]
			0.000	7.175	0.000		6.50 [kN/m2]
	gar	-mult-			activated		100.00 percent

Load Case 716 (Q_1) deltaq6.5-lane2-R

Factor forces and moments	1.000	
unfavourable safety factor	1.500	
favourable safety factor	0.000	
Combination coefficient ψ-0	0.750	(rare)
Combination coefficient ψ-1'	0.800	(non frequent)
Combination coefficient ψ-1	0.750	(frequent)
Combination coefficient ψ-2	0.200	(permanent)

SOFiSTiK AG - www.sofistik.de

Composite bridge 38+50+38, b=14.25m, 2x2HL1100R HISTAR460 , slab 0.30m C30/37
Obciazenia zmienne

Loads

Kind	Referenceto	Projection W[m]	Coordinates X[m]	Y[m]	Z[m]	Type	Loadvalue
Area			0.000	7.175	0.000	Pz	6.50 [kN/m2]
			38.000	7.175	0.000		6.50 [kN/m2]
			38.000	4.175	0.000		6.50 [kN/m2]
			0.000	4.175	0.000		6.50 [kN/m2]
	gar	1100			activated		100.00 percent

Load Case 721 (Q_1) q2.5-lane1-R

Factor forces and moments	1.000	
unfavourable safety factor	1.500	
favourable safety factor	0.000	
Combination coefficient ψ-0	0.750	(rare)
Combination coefficient ψ-1'	0.800	(non frequent)
Combination coefficient ψ-1	0.750	(frequent)
Combination coefficient ψ-2	0.200	(permanent)

Loads

Kind	Referenceto	Projection W[m]	Coordinates X[m]	Y[m]	Z[m]	Type	Loadvalue
Area			38.000	10.175	0.000	Pz	2.50 [kN/m2]
			88.000	10.175	0.000		2.50 [kN/m2]
			88.000	7.175	0.000		2.50 [kN/m2]
			38.000	7.175	0.000		2.50 [kN/m2]
	gar	-mult-			activated		100.00 percent

Load Case 722 (Q_1) q2.5-lane2-R

Factor forces and moments	1.000	
unfavourable safety factor	1.500	
favourable safety factor	0.000	
Combination coefficient ψ-0	0.750	(rare)
Combination coefficient ψ-1'	0.800	(non frequent)
Combination coefficient ψ-1	0.750	(frequent)
Combination coefficient ψ-2	0.200	(permanent)

Loads

Kind	Referenceto	Projection W[m]	Coordinates X[m]	Y[m]	Z[m]	Type	Loadvalue
Area			38.000	7.175	0.000	Pz	2.50 [kN/m2]
			88.000	7.175	0.000		2.50 [kN/m2]
			88.000	4.175	0.000		2.50 [kN/m2]
			38.000	4.175	0.000		2.50 [kN/m2]
	gar	2100			activated		100.00 percent

Load Case 724 (Q_1) q2.5-remain-R

Factor forces and moments	1.000	
unfavourable safety factor	1.500	
favourable safety factor	0.000	
Combination coefficient ψ-0	0.750	(rare)
Combination coefficient ψ-1'	0.800	(non frequent)
Combination coefficient ψ-1	0.750	(frequent)
Combination coefficient ψ-2	0.200	(permanent)

Loads

Kind	Referenceto	Projection W[m]	Coordinates X[m]	Y[m]	Z[m]	Type	Loadvalue
Area			38.000	4.175	0.000	Pz	2.50 [kN/m2]
			88.000	4.175	0.000		2.50 [kN/m2]
			88.000	1.575	0.000		2.50 [kN/m2]
			38.000	1.575	0.000		2.50 [kN/m2]
	gar	2100			activated		100.00 percent

SOFiSTiK AG - www.sofistik.de

Composite bridge 38+50+38, b=14.25m, 2x2HL1100R HISTAR460 , slab 0.30m C30/37
Obciazenia zmienne

Load Case 725 (Q_1) deltaq6.5-lane1-R

Factor forces and moments	1.000	
unfavourable safety factor	1.500	
favourable safety factor	0.000	
Combination coefficient ψ-0	0.750	(rare)
Combination coefficient ψ-1'	0.800	(non frequent)
Combination coefficient ψ-1	0.750	(frequent)
Combination coefficient ψ-2	0.200	(permanent)

Loads

Kind	Referenceto	Projection W[m]	Coordinates X[m]	Y[m]	Z[m]	Type	Loadvalue
Area			38.000	10.175	0.000	Pz	6.50 [kN/m2]
			88.000	10.175	0.000		6.50 [kN/m2]
			88.000	7.175	0.000		6.50 [kN/m2]
			38.000	7.175	0.000		6.50 [kN/m2]
	gar -mult-				activated		100.00 percent

Load Case 726 (Q_1) deltaq6.5-lane2-R

Factor forces and moments	1.000	
unfavourable safety factor	1.500	
favourable safety factor	0.000	
Combination coefficient ψ-0	0.750	(rare)
Combination coefficient ψ-1'	0.800	(non frequent)
Combination coefficient ψ-1	0.750	(frequent)
Combination coefficient ψ-2	0.200	(permanent)

Loads

Kind	Referenceto	Projection W[m]	Coordinates X[m]	Y[m]	Z[m]	Type	Loadvalue
Area			38.000	7.175	0.000	Pz	6.50 [kN/m2]
			88.000	7.175	0.000		6.50 [kN/m2]
			88.000	4.175	0.000		6.50 [kN/m2]
			38.000	4.175	0.000		6.50 [kN/m2]
	gar 2100				activated		100.00 percent

Load Case 731 (Q_1) q2.5-lane1-R

Factor forces and moments	1.000	
unfavourable safety factor	1.500	
favourable safety factor	0.000	
Combination coefficient ψ-0	0.750	(rare)
Combination coefficient ψ-1'	0.800	(non frequent)
Combination coefficient ψ-1	0.750	(frequent)
Combination coefficient ψ-2	0.200	(permanent)

Loads

Kind	Referenceto	Projection W[m]	Coordinates X[m]	Y[m]	Z[m]	Type	Loadvalue
Area			88.000	10.175	0.000	Pz	2.50 [kN/m2]
			126.000	10.175	0.000		2.50 [kN/m2]
			126.000	7.175	0.000		2.50 [kN/m2]
			88.000	7.175	0.000		2.50 [kN/m2]
	gar -mult-				activated		100.00 percent

Load Case 732 (Q_1) q2.5-lane2-R

Factor forces and moments	1.000	
unfavourable safety factor	1.500	
favourable safety factor	0.000	
Combination coefficient ψ-0	0.750	(rare)
Combination coefficient ψ-1'	0.800	(non frequent)
Combination coefficient ψ-1	0.750	(frequent)
Combination coefficient ψ-2	0.200	(permanent)

SOFiSTiK AG - www.sofistik.de

Composite bridge 38+50+38, b=14.25m, 2x2HL1100R HISTAR460 , slab 0.30m C30/37
Obciazenia zmienne

Loads

Kind	Referenceto	Projection W[m]	Coordinates X[m]	Y[m]	Z[m]	Type	Loadvalue
Area			88.000	7.175	0.000	Pz	2.50 [kN/m2]
			126.000	7.175	0.000		2.50 [kN/m2]
			126.000	4.175	0.000		2.50 [kN/m2]
			88.000	4.175	0.000		2.50 [kN/m2]
	gar	3100			activated		100.00 percent

Load Case 734 (Q_1) q2.5-remain-R

Factor forces and moments	1.000	
unfavourable safety factor	1.500	
favourable safety factor	0.000	
Combination coefficient ψ-0	0.750	(rare)
Combination coefficient ψ-1'	0.800	(non frequent)
Combination coefficient ψ-1	0.750	(frequent)
Combination coefficient ψ-2	0.200	(permanent)

Loads

Kind	Referenceto	Projection W[m]	Coordinates X[m]	Y[m]	Z[m]	Type	Loadvalue
Area			88.000	4.175	0.000	Pz	2.50 [kN/m2]
			126.000	4.175	0.000		2.50 [kN/m2]
			126.000	1.575	0.000		2.50 [kN/m2]
			88.000	1.575	0.000		2.50 [kN/m2]
	gar	3100			activated		100.00 percent

Load Case 735 (Q_1) deltaq6.5-lane1-R

Factor forces and moments	1.000	
unfavourable safety factor	1.500	
favourable safety factor	0.000	
Combination coefficient ψ-0	0.750	(rare)
Combination coefficient ψ-1'	0.800	(non frequent)
Combination coefficient ψ-1	0.750	(frequent)
Combination coefficient ψ-2	0.200	(permanent)

Loads

Kind	Referenceto	Projection W[m]	Coordinates X[m]	Y[m]	Z[m]	Type	Loadvalue
Area			88.000	10.175	0.000	Pz	6.50 [kN/m2]
			126.000	10.175	0.000		6.50 [kN/m2]
			126.000	7.175	0.000		6.50 [kN/m2]
			88.000	7.175	0.000		6.50 [kN/m2]
	gar	-mult-			activated		100.00 percent

Load Case 736 (Q_1) deltaq6.5-lane2-R

Factor forces and moments	1.000	
unfavourable safety factor	1.500	
favourable safety factor	0.000	
Combination coefficient ψ-0	0.750	(rare)
Combination coefficient ψ-1'	0.800	(non frequent)
Combination coefficient ψ-1	0.750	(frequent)
Combination coefficient ψ-2	0.200	(permanent)

Loads

Kind	Referenceto	Projection W[m]	Coordinates X[m]	Y[m]	Z[m]	Type	Loadvalue
Area			88.000	7.175	0.000	Pz	6.50 [kN/m2]
			126.000	7.175	0.000		6.50 [kN/m2]
			126.000	4.175	0.000		6.50 [kN/m2]
			88.000	4.175	0.000		6.50 [kN/m2]
	gar	3100			activated		100.00 percent

SOFiSTiK AG - www.sofistik.de

Composite bridge 38+50+38, b=14.25m, 2x2HL1100R HISTAR460 , slab 0.30m C30/37
Obciazenia zmienne

Load Case 901 (T_1) TN:+31

```
Factor forces and moments          1.000
unfavourable safety factor         1.500
favourable safety factor           0.000
Combination coefficient ψ-0        0.600 (rare)
Combination coefficient ψ-1'       1.000 (non frequent)
Combination coefficient ψ-1        0.600 (frequent)
Combination coefficient ψ-2        0.500 (permanent)
```

Loads

```
Kind    Referenceto  Projection Coordinates                 Type Loadvalue
                          W[m]     X[m]     Y[m]     Z[m]
Area                                                        TEMP    31.000 [°C]
        QGRP     81                                activated         100.00 percent
Area                                                        TEMP    31.000 [°C]
        QGRP     82                                activated         100.00 percent
Area                                                        TEMP    31.000 [°C]
        QGRP     83                                activated         100.00 percent
```

Load Case 902 (T_1) TN:-30

```
Factor forces and moments          1.000
unfavourable safety factor         1.500
favourable safety factor           0.000
Combination coefficient ψ-0        0.600 (rare)
Combination coefficient ψ-1'       1.000 (non frequent)
Combination coefficient ψ-1        0.600 (frequent)
Combination coefficient ψ-2        0.500 (permanent)
```

Loads

```
Kind    Referenceto  Projection Coordinates                 Type Loadvalue
                          W[m]     X[m]     Y[m]     Z[m]
Area                                                        TEMP   -30.000 [°C]
        QGRP     81                                activated         100.00 percent
Area                                                        TEMP   -30.000 [°C]
        QGRP     82                                activated         100.00 percent
Area                                                        TEMP   -30.000 [°C]
        QGRP     83                                activated         100.00 percent
```

Load Case 910 (T_1) TM:18deg-bottom warmer

```
Factor forces and moments          1.000
unfavourable safety factor         1.500
favourable safety factor           0.000
Combination coefficient ψ-0        0.600 (rare)
Combination coefficient ψ-1'       1.000 (non frequent)
Combination coefficient ψ-1        0.600 (frequent)
Combination coefficient ψ-2        0.500 (permanent)
```

Load Case 911 (T_1) TM(18:bot.warm)+wTN

```
Factor forces and moments          1.000
unfavourable safety factor         1.500
favourable safety factor           0.000
Combination coefficient ψ-0        0.600 (rare)
Combination coefficient ψ-1'       1.000 (non frequent)
Combination coefficient ψ-1        0.600 (frequent)
Combination coefficient ψ-2        0.500 (permanent)
Loads partially  copied from load case   910 with factor    1.000
Loads partially  copied from load case   901 with factor    0.350
```

Loads

```
Kind    Referenceto  Projection Coordinates                 Type Loadvalue
                          W[m]     X[m]     Y[m]     Z[m]
Area                                                        TEMP    10.850 [°C]
        QGRP     81                                activated         100.00 percent
Area                                                        TEMP    10.850 [°C]
        QGRP     82                                activated         100.00 percent
Area                                                        TEMP    10.850 [°C]
```

SOFiSTiK AG - www.sofistik.de

Composite bridge 38+50+38, b=14.25m, 2x2HL1100R HISTAR460 , slab 0.30m C30/37
Obciazenia zmienne

Loads

Kind	Referenceto	Projection Coordinates W[m]	X[m]	Y[m]	Z[m]	Type	Loadvalue
QGRP	83				activated		100.00 percent

Load Case 912 (T_1) TM(18:bot.warm)-wTN

Factor forces and moments 1.000
unfavourable safety factor 1.500
favourable safety factor 0.000
Combination coefficient ψ-0 0.600 (rare)
Combination coefficient ψ-1' 1.000 (non frequent)
Combination coefficient ψ-1 0.600 (frequent)
Combination coefficient ψ-2 0.500 (permanent)
Loads partially copied from load case 910 with factor 1.000
Loads partially copied from load case 902 with factor 0.350

Loads

Kind	Referenceto	Projection Coordinates W[m]	X[m]	Y[m]	Z[m]	Type	Loadvalue
Area						TEMP	-10.500 [°C]
QGRP	81				activated		100.00 percent
Area						TEMP	-10.500 [°C]
QGRP	82				activated		100.00 percent
Area						TEMP	-10.500 [°C]
QGRP	83				activated		100.00 percent

Load Case 913 (T_1) wTM(18:bot.warm)+TN

Factor forces and moments 1.000
unfavourable safety factor 1.500
favourable safety factor 0.000
Combination coefficient ψ-0 0.600 (rare)
Combination coefficient ψ-1' 1.000 (non frequent)
Combination coefficient ψ-1 0.600 (frequent)
Combination coefficient ψ-2 0.500 (permanent)
Loads partially copied from load case 910 with factor 0.750
Loads partially copied from load case 901 with factor 1.000

Loads

Kind	Referenceto	Projection Coordinates W[m]	X[m]	Y[m]	Z[m]	Type	Loadvalue
Area						TEMP	31.000 [°C]
QGRP	81				activated		100.00 percent
Area						TEMP	31.000 [°C]
QGRP	82				activated		100.00 percent
Area						TEMP	31.000 [°C]
QGRP	83				activated		100.00 percent

Load Case 914 (T_1) wTM(18:bot.warm)-TN

Factor forces and moments 1.000
unfavourable safety factor 1.500
favourable safety factor 0.000
Combination coefficient ψ-0 0.600 (rare)
Combination coefficient ψ-1' 1.000 (non frequent)
Combination coefficient ψ-1 0.600 (frequent)
Combination coefficient ψ-2 0.500 (permanent)
Loads partially copied from load case 910 with factor 0.750
Loads partially copied from load case 902 with factor 1.000

Loads

Kind	Referenceto	Projection Coordinates W[m]	X[m]	Y[m]	Z[m]	Type	Loadvalue
Area						TEMP	-30.000 [°C]
QGRP	81				activated		100.00 percent
Area						TEMP	-30.000 [°C]
QGRP	82				activated		100.00 percent
Area						TEMP	-30.000 [°C]

SOFiSTiK AG - www.sofistik.de

Composite bridge 38+50+38, b=14.25m, 2x2HL1100R HISTAR460 , slab 0.30m C30/37
Obciazenia zmienne

Loads

Kind	Referenceto	Projection Coordinates W[m]	X[m]	Y[m]	Z[m]	Type	Loadvalue
QGRP	83				activated		100.00 percent

Load Case 920 (T_1) TM:15deg upper warmer

Factor forces and moments 1.000
unfavourable safety factor 1.500
favourable safety factor 0.000
Combination coefficient ψ-0 0.600 (rare)
Combination coefficient ψ-1' 1.000 (non frequent)
Combination coefficient ψ-1 0.600 (frequent)
Combination coefficient ψ-2 0.500 (permanent)

Load Case 921 (T_1) TM(15:up.warm)+wTN

Factor forces and moments 1.000
unfavourable safety factor 1.500
favourable safety factor 0.000
Combination coefficient ψ-0 0.600 (rare)
Combination coefficient ψ-1' 1.000 (non frequent)
Combination coefficient ψ-1 0.600 (frequent)
Combination coefficient ψ-2 0.500 (permanent)
Loads partially copied from load case 920 with factor 1.000
Loads partially copied from load case 901 with factor 0.350

Loads

Kind	Referenceto	Projection Coordinates W[m]	X[m]	Y[m]	Z[m]	Type	Loadvalue
Area						TEMP	10.850 [°C]
QGRP	81				activated		100.00 percent
Area						TEMP	10.850 [°C]
QGRP	82				activated		100.00 percent
Area						TEMP	10.850 [°C]
QGRP	83				activated		100.00 percent

Load Case 922 (T_1) TM(15:up.warm)-wTN

Factor forces and moments 1.000
unfavourable safety factor 1.500
favourable safety factor 0.000
Combination coefficient ψ-0 0.600 (rare)
Combination coefficient ψ-1' 1.000 (non frequent)
Combination coefficient ψ-1 0.600 (frequent)
Combination coefficient ψ-2 0.500 (permanent)
Loads partially copied from load case 920 with factor 1.000
Loads partially copied from load case 902 with factor 0.350

Loads

Kind	Referenceto	Projection Coordinates W[m]	X[m]	Y[m]	Z[m]	Type	Loadvalue
Area						TEMP	-10.500 [°C]
QGRP	81				activated		100.00 percent
Area						TEMP	-10.500 [°C]
QGRP	82				activated		100.00 percent
Area						TEMP	-10.500 [°C]
QGRP	83				activated		100.00 percent

Load Case 923 (T_1) wTM(15:up.warm)+TN

Factor forces and moments 1.000
unfavourable safety factor 1.500
favourable safety factor 0.000
Combination coefficient ψ-0 0.600 (rare)
Combination coefficient ψ-1' 1.000 (non frequent)
Combination coefficient ψ-1 0.600 (frequent)
Combination coefficient ψ-2 0.500 (permanent)
Loads partially copied from load case 920 with factor 0.750
Loads partially copied from load case 901 with factor 1.000

SOFiSTiK AG - www.sofistik.de

Composite bridge 38+50+38, b=14.25m, 2x2HL1100R HISTAR460 , slab 0.30m C30/37
Obciazenia zmienne

Loads

Kind	Referenceto	Projection Coordinates W[m]	X[m]	Y[m]	Z[m]	Type	Loadvalue
Area						TEMP	31.000 [°C]
	QGRP	81			activated		100.00 percent
Area						TEMP	31.000 [°C]
	QGRP	82			activated		100.00 percent
Area						TEMP	31.000 [°C]
	QGRP	83			activated		100.00 percent

Load Case 924 (T_1) wTM(15:up.warm)-TN

Factor forces and moments 1.000
unfavourable safety factor 1.500
favourable safety factor 0.000
Combination coefficient ψ-0 0.600 (rare)
Combination coefficient ψ-1' 1.000 (non frequent)
Combination coefficient ψ-1 0.600 (frequent)
Combination coefficient ψ-2 0.500 (permanent)
Loads partially copied from load case 920 with factor 0.750
Loads partially copied from load case 902 with factor 1.000

Loads

Kind	Referenceto	Projection Coordinates W[m]	X[m]	Y[m]	Z[m]	Type	Loadvalue
Area						TEMP	-30.000 [°C]
	QGRP	81			activated		100.00 percent
Area						TEMP	-30.000 [°C]
	QGRP	82			activated		100.00 percent
Area						TEMP	-30.000 [°C]
	QGRP	83			activated		100.00 percent

Sum of Loads

LC	Title	PXX[kN]	PYY[kN]	PZZ[kN]
5	gn	0.0	0.0	7565.2
6	soil Ka:g	0.0	0.0	0.0
11	q2.5-lane1-L	0.0	0.0	285.0
12	q2.5-lane2-L	0.0	0.0	285.0
14	q2.5-remain-L	0.0	0.0	247.0
15	deltaq6.5-lane1-L	0.0	0.0	741.0
16	deltaq6.5-lane2-L	0.0	0.0	741.0
18	pedstrian-L	0.0	0.0	535.8
19	pedstrian-R	0.0	0.0	108.3
21	q2.5-lane1-L	0.0	0.0	375.0
22	q2.5-lane2-L	0.0	0.0	375.0
24	q2.5-remain-L	0.0	0.0	325.0
25	deltaq6.5-lane1-L	0.0	0.0	975.0
26	deltaq6.5-lane2-L	0.0	0.0	975.0
28	pedstrian-L	0.0	0.0	705.0
29	pedstrian-R	0.0	0.0	142.5
31	q2.5-lane1-L	0.0	0.0	285.0
32	q2.5-lane2-L	0.0	0.0	285.0
34	q2.5-remain-L	0.0	0.0	247.0
35	deltaq6.5-lane1-L	0.0	0.0	741.0
36	deltaq6.5-lane2-L	0.0	0.0	741.0
38	pedstrian-L	0.0	0.0	535.8
39	pedstrian-R	0.0	0.0	108.3
110	K-EN-L	0.0	0.0	100.0
111	K-EN-L	0.0	0.0	200.0
112	K-EN-L	0.0	0.0	200.0
113	K-EN-L	0.0	0.0	200.0
114	K-EN-L	0.0	0.0	200.0
115	K-EN-L	0.0	0.0	200.0
116	K-EN-L	0.0	0.0	200.0
117	K-EN-L	0.0	0.0	200.0
118	K-EN-L	0.0	0.0	200.0
119	K-EN-L	0.0	0.0	200.0

SOFiSTiK AG - www.sofistik.de

Composite bridge 38+50+38, b=14.25m, 2x2HL1100R HISTAR460 , slab 0.30m C30/37
Obciazenia zmienne

Sum of Loads

LC	Title	PXX[kN]	PYY[kN]	PZZ[kN]
120	K-EN-L	0.0	0.0	200.0
121	K-EN-L	0.0	0.0	200.0
122	K-EN-L	0.0	0.0	200.0
123	K-EN-L	0.0	0.0	200.0
124	K-EN-L	0.0	0.0	200.0
125	K-EN-L	0.0	0.0	200.0
126	K-EN-L	0.0	0.0	200.0
127	K-EN-L	0.0	0.0	200.0
128	K-EN-L	0.0	0.0	200.0
129	K-EN-L	0.0	0.0	200.0
130	K-EN-L	0.0	0.0	200.0
131	K-EN-L	0.0	0.0	200.0
132	K-EN-L	0.0	0.0	200.0
133	K-EN-L	0.0	0.0	200.0
134	K-EN-L	0.0	0.0	200.0
135	K-EN-L	0.0	0.0	200.0
136	K-EN-L	0.0	0.0	200.0
137	K-EN-L	0.0	0.0	200.0
138	K-EN-L	0.0	0.0	200.0
139	K-EN-L	0.0	0.0	100.0
210	K-EN-L	0.0	0.0	100.0
211	K-EN-L	0.0	0.0	200.0
212	K-EN-L	0.0	0.0	200.0
213	K-EN-L	0.0	0.0	200.0
214	K-EN-L	0.0	0.0	200.0
215	K-EN-L	0.0	0.0	200.0
216	K-EN-L	0.0	0.0	200.0
217	K-EN-L	0.0	0.0	200.0
218	K-EN-L	0.0	0.0	200.0
219	K-EN-L	0.0	0.0	200.0
220	K-EN-L	0.0	0.0	200.0
221	K-EN-L	0.0	0.0	200.0
222	K-EN-L	0.0	0.0	200.0
223	K-EN-L	0.0	0.0	200.0
224	K-EN-L	0.0	0.0	200.0
225	K-EN-L	0.0	0.0	200.0
226	K-EN-L	0.0	0.0	200.0
227	K-EN-L	0.0	0.0	200.0
228	K-EN-L	0.0	0.0	200.0
229	K-EN-L	0.0	0.0	200.0
230	K-EN-L	0.0	0.0	200.0
231	K-EN-L	0.0	0.0	200.0
232	K-EN-L	0.0	0.0	200.0
233	K-EN-L	0.0	0.0	200.0
234	K-EN-L	0.0	0.0	200.0
235	K-EN-L	0.0	0.0	200.0
236	K-EN-L	0.0	0.0	200.0
237	K-EN-L	0.0	0.0	200.0
238	K-EN-L	0.0	0.0	200.0
239	K-EN-L	0.0	0.0	100.0
410	K-EN-R	0.0	0.0	100.0
411	K-EN-R	0.0	0.0	200.0
412	K-EN-R	0.0	0.0	200.0
413	K-EN-R	0.0	0.0	200.0
414	K-EN-R	0.0	0.0	200.0
415	K-EN-R	0.0	0.0	200.0
416	K-EN-R	0.0	0.0	200.0
417	K-EN-R	0.0	0.0	200.0
418	K-EN-R	0.0	0.0	200.0
419	K-EN-R	0.0	0.0	200.0
420	K-EN-R	0.0	0.0	200.0
421	K-EN-R	0.0	0.0	200.0
422	K-EN-R	0.0	0.0	200.0
423	K-EN-R	0.0	0.0	200.0

SOFiSTiK AG - www.sofistik.de

Composite bridge 38+50+38, b=14.25m, 2x2HL1100R HISTAR460 , slab 0.30m C30/37
Obciazenia zmienne

Sum of Loads

LC	Title	PXX[kN]	PYY[kN]	PZZ[kN]
424	K-EN-R	0.0	0.0	200.0
425	K-EN-R	0.0	0.0	200.0
426	K-EN-R	0.0	0.0	200.0
427	K-EN-R	0.0	0.0	200.0
428	K-EN-R	0.0	0.0	200.0
429	K-EN-R	0.0	0.0	200.0
430	K-EN-R	0.0	0.0	200.0
431	K-EN-R	0.0	0.0	200.0
432	K-EN-R	0.0	0.0	200.0
433	K-EN-R	0.0	0.0	200.0
434	K-EN-R	0.0	0.0	200.0
435	K-EN-R	0.0	0.0	200.0
436	K-EN-R	0.0	0.0	200.0
437	K-EN-R	0.0	0.0	200.0
438	K-EN-R	0.0	0.0	200.0
439	K-EN-R	0.0	0.0	100.0
510	K-EN-R	0.0	0.0	100.0
511	K-EN-R	0.0	0.0	200.0
512	K-EN-R	0.0	0.0	200.0
513	K-EN-R	0.0	0.0	200.0
514	K-EN-R	0.0	0.0	200.0
515	K-EN-R	0.0	0.0	200.0
516	K-EN-R	0.0	0.0	200.0
517	K-EN-R	0.0	0.0	200.0
518	K-EN-R	0.0	0.0	200.0
519	K-EN-R	0.0	0.0	200.0
520	K-EN-R	0.0	0.0	200.0
521	K-EN-R	0.0	0.0	200.0
522	K-EN-R	0.0	0.0	200.0
523	K-EN-R	0.0	0.0	200.0
524	K-EN-R	0.0	0.0	200.0
525	K-EN-R	0.0	0.0	200.0
526	K-EN-R	0.0	0.0	200.0
527	K-EN-R	0.0	0.0	200.0
528	K-EN-R	0.0	0.0	200.0
529	K-EN-R	0.0	0.0	200.0
530	K-EN-R	0.0	0.0	200.0
531	K-EN-R	0.0	0.0	200.0
532	K-EN-R	0.0	0.0	200.0
533	K-EN-R	0.0	0.0	200.0
534	K-EN-R	0.0	0.0	200.0
535	K-EN-R	0.0	0.0	200.0
536	K-EN-R	0.0	0.0	200.0
537	K-EN-R	0.0	0.0	200.0
538	K-EN-R	0.0	0.0	200.0
539	K-EN-R	0.0	0.0	100.0
711	q2.5-lane1-R	0.0	0.0	285.0
712	q2.5-lane2-R	0.0	0.0	285.0
714	q2.5-remain-R	0.0	0.0	247.0
715	deltaq6.5-lane1-R	0.0	0.0	741.0
716	deltaq6.5-lane2-R	0.0	0.0	741.0
721	q2.5-lane1-R	0.0	0.0	375.0
722	q2.5-lane2-R	0.0	0.0	375.0
724	q2.5-remain-R	0.0	0.0	325.0
725	deltaq6.5-lane1-R	0.0	0.0	975.0
726	deltaq6.5-lane2-R	0.0	0.0	975.0
731	q2.5-lane1-R	0.0	0.0	285.0
732	q2.5-lane2-R	0.0	0.0	285.0
734	q2.5-remain-R	0.0	0.0	247.0
735	deltaq6.5-lane1-R	0.0	0.0	741.0
736	deltaq6.5-lane2-R	0.0	0.0	741.0
901	TN:+31	0.0	0.0	0.0
902	TN:-30	0.0	0.0	0.0
910	TM:18deg-bottom warmer	0.0	0.0	0.0

SOFiSTiK AG - www.sofistik.de

Composite bridge 38+50+38, b=14.25m, 2x2HL1100R HISTAR460 , slab 0.30m C30/37
Obciazenia zmienne

Sum of Loads

LC	Title	PXX[kN]	PYY[kN]	PZZ[kN]
911	TM(18:bot.warm)+wTN	0.0	0.0	0.0
912	TM(18:bot.warm)-wTN	0.0	0.0	0.0
913	wTM(18:bot.warm)+TN	0.0	0.0	0.0
914	wTM(18:bot.warm)-TN	0.0	0.0	0.0
920	TM:15deg upper warmer	0.0	0.0	0.0
921	TM(15:up.warm)+wTN	0.0	0.0	0.0
922	TM(15:up.warm)-wTN	0.0	0.0	0.0
923	wTM(15:up.warm)+TN	0.0	0.0	0.0
924	wTM(15:up.warm)-TN	0.0	0.0	0.0

Nodal Reactions and Residual Forces
Loadcase 5 gn

Node No	P-X [kN]	P-Y [kN]	P-Z [kN]	M-X [kNm]	M-Y [kNm]	M-Z [kNm]
1126			-194.9			
1136			-194.9			
1226			-188.1			
1236			-188.1			
2126			-893.7			
2136			-881.5			
2226			-614.6			
2236			-626.8			
3126			-887.2			
3136			-887.2			
3226			-621.1			
3236			-621.1			
4126			-194.0			
4136			-194.1			
4226			-188.9			
4236			-188.9			

Nodal Reactions and Residual Forces
Loadcase 6 soil Ka:g

Node No	P-X [kN]	P-Y [kN]	P-Z [kN]	M-X [kNm]	M-Y [kNm]	M-Z [kNm]
1126			3428.5			
1136			-3428.5			
1226			3427.5			
1236			-3427.5			
4126			-3428.5			
4136			3428.5			
4226			-3427.5			
4236			3427.5			

Nodal Reactions and Residual Forces
Loadcase 11 q2.5-lane1-L

Node No	P-X [kN]	P-Y [kN]	P-Z [kN]	M-X [kNm]	M-Y [kNm]	M-Z [kNm]
1126			-32.6			
1136			-32.6			
1226			-28.1			
1236			-28.1			
2126			-51.5			
2136			-60.9			
2226			-41.2			
2236			-31.8			
3126			9.1			
3136			9.1			
3226			5.5			
3236			5.5			
4126			-2.3			
4136			-2.3			
4226			-1.5			
4236			-1.5			

SOFiSTiK AG - www.sofistik.de

Composite bridge 38+50+38, b=14.25m, 2x2HL1100R HISTAR460 , slab 0.30m C30/37
Obciazenia zmienne

Nodal Reactions and Residual Forces
Loadcase 12 q2.5-lane2-L

Node No	P-X [kN]	P-Y [kN]	P-Z [kN]	M-X [kNm]	M-Y [kNm]	M-Z [kNm]
1126			-23.5			
1136			-23.5			
1226			-37.1			
1236			-37.1			
2126			-39.0			
2136			-16.9			
2226			-53.8			
2236			-75.9			
3126			6.9			
3136			6.9			
3226			7.8			
3236			7.8			
4126			-2.6			
4136			-2.6			
4226			-1.1			
4236			-1.1			

Nodal Reactions and Residual Forces
Loadcase 14 q2.5-remain-L

Node No	P-X [kN]	P-Y [kN]	P-Z [kN]	M-X [kNm]	M-Y [kNm]	M-Z [kNm]
1126			-13.0			
1136			-13.1			
1226			-39.4			
1236			-39.4			
2126			-22.9			
2136			20.8			
2226			-57.8			
2236			-101.5			
3126			3.7			
3136			3.7			
3226			9.2			
3236			9.2			
4126			-2.3			
4136			-2.3			
4226			-1.0			
4236			-1.0			

Nodal Reactions and Residual Forces
Loadcase 15 deltaq6.5-lane1-L

Node No	P-X [kN]	P-Y [kN]	P-Z [kN]	M-X [kNm]	M-Y [kNm]	M-Z [kNm]
1126			-84.7			
1136			-84.7			
1226			-73.0			
1236			-73.0			
2126			-133.9			
2136			-158.5			
2226			-107.2			
2236			-82.7			
3126			23.7			
3136			23.7			
3226			14.4			
3236			14.4			
4126			-5.9			
4136			-5.9			
4226			-3.9			
4236			-3.9			

SOFiSTiK AG - www.sofistik.de

Composite bridge 38+50+38, b=14.25m, 2x2HL1100R HISTAR460 , slab 0.30m C30/37
Obciazenia zmienne

Nodal Reactions and Residual Forces
Loadcase 16 deltaq6.5-lane2-L

Node No	P-X [kN]	P-Y [kN]	P-Z [kN]	M-X [kNm]	M-Y [kNm]	M-Z [kNm]
1126			-61.0			
1136			-61.0			
1226			-96.6			
1236			-96.6			
2126			-101.5			
2136			-43.9			
2226			-139.8			
2236			-197.4			
3126			18.0			
3136			18.0			
3226			20.3			
3236			20.3			
4126			-6.9			
4136			-6.9			
4226			-2.9			
4236			-2.9			

Nodal Reactions and Residual Forces
Loadcase 18 pedstrian-L

Node No	P-X [kN]	P-Y [kN]	P-Z [kN]	M-X [kNm]	M-Y [kNm]	M-Z [kNm]
1126			-85.3			
1136			-85.2			
1226			-28.5			
1236			-28.5			
2126			-122.9			
2136			-216.5			
2226			-52.0			
2236			41.5			
3126			18.2			
3136			18.2			
3226			9.7			
3236			9.7			
4126			-1.3			
4136			-1.3			
4226			-5.9			
4236			-5.9			

Nodal Reactions and Residual Forces
Loadcase 19 pedstrian-R

Node No	P-X [kN]	P-Y [kN]	P-Z [kN]	M-X [kNm]	M-Y [kNm]	M-Z [kNm]
1126			-3.7			
1136			-3.7			
1226			-19.2			
1236			-19.2			
2126			-6.9			
2136			18.9			
2226			-28.6			
2236			-54.4			
3126			1.0			
3136			1.0			
3226			4.8			
3236			4.8			
4126			-1.0			
4136			-1.0			
4226			-0.5			
4236			-0.5			

SOFiSTiK AG - www.sofistik.de

Composite bridge 38+50+38, b=14.25m, 2x2HL1100R HISTAR460 , slab 0.30m C30/37
Obciazenia zmienne

Nodal Reactions and Residual Forces
Loadcase 21 q2.5-lane1-L

Node No	P-X [kN]	P-Y [kN]	P-Z [kN]	M-X [kNm]	M-Y [kNm]	M-Z [kNm]
1126			12.1			
1136			12.1			
1226			4.3			
1236			4.3			
2126			-73.3			
2136			-60.3			
2226			-36.8			
2236			-49.8			
3126			-66.3			
3136			-66.3			
3226			-43.8			
3236			-43.8			
4126			12.9			
4136			12.9			
4226			3.5			
4236			3.5			

Nodal Reactions and Residual Forces
Loadcase 22 q2.5-lane2-L

Node No	P-X [kN]	P-Y [kN]	P-Z [kN]	M-X [kNm]	M-Y [kNm]	M-Z [kNm]
1126			4.1			
1136			4.1			
1226			12.2			
1236			12.2			
2126			-17.5			
2136			-47.6			
2226			-92.7			
2236			-62.5			
3126			-33.6			
3136			-33.6			
3226			-76.6			
3236			-76.6			
4126			2.3			
4136			2.3			
4226			14.1			
4236			14.1			

Nodal Reactions and Residual Forces
Loadcase 24 q2.5-remain-L

Node No	P-X [kN]	P-Y [kN]	P-Z [kN]	M-X [kNm]	M-Y [kNm]	M-Z [kNm]
1126			-3.6			
1136			-3.6			
1226			17.9			
1236			17.9			
2126			30.2			
2136			-30.0			
2226			-125.8			
2236			-65.6			
3126			-2.0			
3136			-2.0			
3226			-93.6			
3236			-93.6			
4126			-7.3			
4136			-7.3			
4226			21.6			
4236			21.6			

SOFiSTiK AG - www.sofistik.de

Composite bridge 38+50+38, b=14.25m, 2x2HL1100R HISTAR460 , slab 0.30m C30/37
Obciazenia zmienne

Nodal Reactions and Residual Forces
Loadcase 25 deltaq6.5-lane1-L

Node No	P-X [kN]	P-Y [kN]	P-Z [kN]	M-X [kNm]	M-Y [kNm]	M-Z [kNm]
1126			31.4			
1136			31.4			
1226			11.1			
1236			11.1			
2126			-190.5			
2136			-156.8			
2226			-95.7			
2236			-129.4			
3126			-172.5			
3136			-172.5			
3226			-113.8			
3236			-113.8			
4126			33.5			
4136			33.5			
4226			9.1			
4236			9.1			

Nodal Reactions and Residual Forces
Loadcase 26 deltaq6.5-lane2-L

Node No	P-X [kN]	P-Y [kN]	P-Z [kN]	M-X [kNm]	M-Y [kNm]	M-Z [kNm]
1126			10.7			
1136			10.7			
1226			31.8			
1236			31.8			
2126			-45.4			
2136			-123.9			
2226			-240.9			
2236			-162.4			
3126			-87.3			
3136			-87.3			
3226			-199.1			
3236			-199.1			
4126			5.9			
4136			5.9			
4226			36.7			
4236			36.7			

Nodal Reactions and Residual Forces
Loadcase 28 pedstrian-L

Node No	P-X [kN]	P-Y [kN]	P-Z [kN]	M-X [kNm]	M-Y [kNm]	M-Z [kNm]
1126			36.1			
1136			36.1			
1226			-5.1			
1236			-5.1			
2126			-267.7			
2136			-139.3			
2226			60.5			
2236			-68.0			
3126			-199.1			
3136			-199.1			
3226			-8.2			
3236			-8.2			
4126			44.0			
4136			44.0			
4226			-13.0			
4236			-13.0			

SOFiSTiK AG - www.sofistik.de

Composite bridge 38+50+38, b=14.25m, 2x2HL1100R HISTAR460 , slab 0.30m C30/37
Obciazenia zmienne

Nodal Reactions and Residual Forces
Loadcase 29 pedstrian-R

Node No	P-X [kN]	P-Y [kN]	P-Z [kN]	M-X [kNm]	M-Y [kNm]	M-Z [kNm]
1126			-3.6			
1136			-3.6			
1226			9.9			
1236			9.9			
2126			25.7			
2136			-9.9			
2226			-67.7			
2236			-32.1			
3126			6.7			
3136			6.7			
3226			-48.6			
3236			-48.6			
4126			-5.8			
4136			-5.8			
4226			12.1			
4236			12.1			

Nodal Reactions and Residual Forces
Loadcase 31 q2.5-lane1-L

Node No	P-X [kN]	P-Y [kN]	P-Z [kN]	M-X [kNm]	M-Y [kNm]	M-Z [kNm]
1126			-2.1			
1136			-2.1			
1226			-1.7			
1236			-1.7			
2126			10.7			
2136			8.3			
2226			4.0			
2236			6.4			
3126			-56.3			
3136			-56.3			
3226			-36.5			
3236			-36.5			
4126			-33.1			
4136			-33.1			
4226			-27.5			
4236			-27.5			

Nodal Reactions and Residual Forces
Loadcase 32 q2.5-lane2-L

Node No	P-X [kN]	P-Y [kN]	P-Z [kN]	M-X [kNm]	M-Y [kNm]	M-Z [kNm]
1126			-3.0			
1136			-3.0			
1226			-0.8			
1236			-0.8			
2126			3.9			
2136			8.2			
2226			10.8			
2236			6.5			
3126			-28.0			
3136			-28.0			
3226			-64.8			
3236			-64.8			
4126			-22.1			
4136			-22.1			
4226			-38.5			
4236			-38.5			

SOFiSTiK AG - www.sofistik.de

Composite bridge 38+50+38, b=14.25m, 2x2HL1100R HISTAR460 , slab 0.30m C30/37
Obciazenia zmienne

Nodal Reactions and Residual Forces
Loadcase 34 q2.5-remain-L

Node No	P-X [kN]	P-Y [kN]	P-Z [kN]	M-X [kNm]	M-Y [kNm]	M-Z [kNm]
1126			-3.0			
1136			-3.0			
1226			-0.3			
1236			-0.3			
2126			-2.7			
2136			6.6			
2226			15.6			
2236			6.3			
3126			-0.9			
3136			-0.9			
3226			-79.7			
3236			-79.7			
4126			-10.5			
4136			-10.5			
4226			-41.9			
4236			-41.9			

Nodal Reactions and Residual Forces
Loadcase 35 deltaq6.5-lane1-L

Node No	P-X [kN]	P-Y [kN]	P-Z [kN]	M-X [kNm]	M-Y [kNm]	M-Z [kNm]
1126			-5.4			
1136			-5.4			
1226			-4.4			
1236			-4.4			
2126			27.9			
2136			21.5			
2226			10.3			
2236			16.7			
3126			-146.3			
3136			-146.3			
3226			-94.9			
3236			-94.9			
4126			-86.1			
4136			-86.1			
4226			-71.5			
4236			-71.5			

Nodal Reactions and Residual Forces
Loadcase 36 deltaq6.5-lane2-L

Node No	P-X [kN]	P-Y [kN]	P-Z [kN]	M-X [kNm]	M-Y [kNm]	M-Z [kNm]
1126			-7.8			
1136			-7.8			
1226			-2.0			
1236			-2.0			
2126			10.0			
2136			21.3			
2226			28.2			
2236			16.9			
3126			-72.9			
3136			-72.9			
3226			-168.4			
3236			-168.4			
4126			-57.5			
4136			-57.5			
4226			-100.1			
4236			-100.1			

SOFiSTiK AG - www.sofistik.de

Composite bridge 38+50+38, b=14.25m, 2x2HL1100R HISTAR460 , slab 0.30m C30/37
Obciazenia zmienne

Nodal Reactions and Residual Forces
Loadcase 38 pedstrian-L

Node No	P-X [kN]	P-Y [kN]	P-Z [kN]	M-X [kNm]	M-Y [kNm]	M-Z [kNm]
1126			0.2			
1136			0.2			
1226			-7.4			
1236			-7.4			
2126			31.5			
2136			12.4			
2226			-3.6			
2236			15.6			
3126			-169.9			
3136			-169.9			
3226			-5.1			
3236			-5.1			
4126			-90.7			
4136			-90.7			
4226			-23.1			
4236			-23.1			

Nodal Reactions and Residual Forces
Loadcase 39 pedstrian-R

Node No	P-X [kN]	P-Y [kN]	P-Z [kN]	M-X [kNm]	M-Y [kNm]	M-Z [kNm]
1126			-1.4			
1136			-1.4			
1226			0.0			
1236			0.0			
2126			-2.9			
2136			2.7			
2226			8.6			
2236			3.0			
3126			6.1			
3136			6.1			
3226			-41.5			
3236			-41.5			
4126			-2.2			
4136			-2.2			
4226			-20.7			
4236			-20.7			

Nodal Reactions and Residual Forces
Loadcase 110 K-EN-L

Node No	P-X [kN]	P-Y [kN]	P-Z [kN]	M-X [kNm]	M-Y [kNm]	M-Z [kNm]
1126			-29.9			
1136			-29.9			
1226			-19.0			
1236			-19.0			
2126			1.3			
2136			1.9			
2226			-2.7			
2236			-3.3			
3126			0.0			
3136			0.0			
3226			0.4			
3236			0.4			
4126			-0.8			
4136			-0.8			
4226			0.6			
4236			0.6			

SOFiSTiK AG - www.sofistik.de

Composite bridge 38+50+38, b=14.25m, 2x2HL1100R HISTAR460 , slab 0.30m C30/37
Obciazenia zmienne

Nodal Reactions and Residual Forces
Loadcase 111 K-EN-L

Node No	P-X [kN]	P-Y [kN]	P-Z [kN]	M-X [kNm]	M-Y [kNm]	M-Z [kNm]
1126			-50.5			
1136			-50.5			
1226			-34.8			
1236			-34.8			
2126			-7.2			
2136			-9.3			
2226			-11.2			
2236			-9.1			
3126			2.5			
3136			2.5			
3226			2.5			
3236			2.5			
4126			-1.4			
4136			-1.4			
4226			0.1			
4236			0.1			

Nodal Reactions and Residual Forces
Loadcase 112 K-EN-L

Node No	P-X [kN]	P-Y [kN]	P-Z [kN]	M-X [kNm]	M-Y [kNm]	M-Z [kNm]
1126			-40.5			
1136			-40.5			
1226			-30.4			
1236			-30.4			
2126			-17.8			
2136			-23.3			
2226			-18.2			
2236			-12.8			
3126			5.1			
3136			5.1			
3226			4.3			
3236			4.3			
4126			-1.5			
4136			-1.5			
4226			-0.9			
4236			-0.9			

Nodal Reactions and Residual Forces
Loadcase 113 K-EN-L

Node No	P-X [kN]	P-Y [kN]	P-Z [kN]	M-X [kNm]	M-Y [kNm]	M-Z [kNm]
1126			-31.5			
1136			-31.5			
1226			-25.8			
1236			-25.8			
2126			-27.3			
2136			-35.5			
2226			-25.2			
2236			-17.0			
3126			7.2			
3136			7.2			
3226			5.8			
3236			5.8			
4126			-1.7			
4136			-1.7			
4226			-1.7			
4236			-1.7			

SOFiSTiK AG - www.sofistik.de

Composite bridge 38+50+38, b=14.25m, 2x2HL1100R HISTAR460 , slab 0.30m C30/37
Obciazenia zmienne

Nodal Reactions and Residual Forces
Loadcase 114 K-EN-L

Node No	P-X [kN]	P-Y [kN]	P-Z [kN]	M-X [kNm]	M-Y [kNm]	M-Z [kNm]
1126			-23.4			
1136			-23.4			
1226			-21.0			
1236			-21.0			
2126			-35.7			
2136			-45.7			
2226			-31.4			
2236			-21.4			
3126			8.7			
3136			8.7			
3226			6.8			
3236			6.8			
4126			-1.9			
4136			-1.9			
4226			-2.1			
4236			-2.1			

Nodal Reactions and Residual Forces
Loadcase 115 K-EN-L

Node No	P-X [kN]	P-Y [kN]	P-Z [kN]	M-X [kNm]	M-Y [kNm]	M-Z [kNm]
1126			-16.4			
1136			-16.4			
1226			-16.3			
1236			-16.3			
2126			-42.9			
2136			-53.7			
2226			-36.4			
2236			-25.6			
3126			9.3			
3136			9.3			
3226			6.9			
3236			6.9			
4126			-1.9			
4136			-1.9			
4226			-2.2			
4236			-2.2			

Nodal Reactions and Residual Forces
Loadcase 116 K-EN-L

Node No	P-X [kN]	P-Y [kN]	P-Z [kN]	M-X [kNm]	M-Y [kNm]	M-Z [kNm]
1126			-10.5			
1136			-10.5			
1226			-12.1			
1236			-12.1			
2126			-48.9			
2136			-59.1			
2226			-39.6			
2236			-29.3			
3126			8.8			
3136			8.8			
3226			6.0			
3236			6.0			
4126			-1.9			
4136			-1.9			
4226			-1.9			
4236			-1.9			

SOFiSTiK AG - www.sofistik.de

Composite bridge 38+50+38, b=14.25m, 2x2HL1100R HISTAR460 , slab 0.30m C30/37
Obciazenia zmienne

Nodal Reactions and Residual Forces
Loadcase 117 K-EN-L

Node No	P-X [kN]	P-Y [kN]	P-Z [kN]	M-X [kNm]	M-Y [kNm]	M-Z [kNm]
1126			-5.5			
1136			-5.5			
1226			-8.5			
1236			-8.5			
2126			-54.0			
2136			-62.0			
2226			-40.6			
2236			-32.5			
3126			7.5			
3136			7.5			
3226			3.9			
3236			3.9			
4126			-1.6			
4136			-1.6			
4226			-1.3			
4236			-1.3			

Nodal Reactions and Residual Forces
Loadcase 118 K-EN-L

Node No	P-X [kN]	P-Y [kN]	P-Z [kN]	M-X [kNm]	M-Y [kNm]	M-Z [kNm]
1126			-0.2			
1136			-0.2			
1226			-6.4			
1236			-6.4			
2126			-59.8			
2136			-64.4			
2226			-38.2			
2236			-33.6			
3126			5.9			
3136			5.9			
3226			0.3			
3236			0.3			
4126			-1.2			
4136			-1.2			
4226			-0.4			
4236			-0.4			

Nodal Reactions and Residual Forces
Loadcase 119 K-EN-L

Node No	P-X [kN]	P-Y [kN]	P-Z [kN]	M-X [kNm]	M-Y [kNm]	M-Z [kNm]
1126			5.4			
1136			5.4			
1226			-5.6			
1236			-5.6			
2126			-66.2			
2136			-66.4			
2226			-33.3			
2236			-33.1			
3126			3.9			
3136			3.9			
3226			-4.4			
3236			-4.4			
4126			-0.4			
4136			-0.4			
4226			0.5			
4236			0.5			

SOFiSTiK AG - www.sofistik.de

Composite bridge 38+50+38, b=14.25m, 2x2HL1100R HISTAR460 , slab 0.30m C30/37
Obciazenia zmienne

Nodal Reactions and Residual Forces
Loadcase 120 K-EN-L

Node No	P-X [kN]	P-Y [kN]	P-Z [kN]	M-X [kNm]	M-Y [kNm]	M-Z [kNm]
1126			5.4			
1136			5.4			
1226			-5.6			
1236			-5.6			
2126			-66.2			
2136			-66.4			
2226			-33.3			
2236			-33.1			
3126			3.9			
3136			3.9			
3226			-4.4			
3236			-4.4			
4126			-0.4			
4136			-0.4			
4226			0.5			
4236			0.5			

Nodal Reactions and Residual Forces
Loadcase 121 K-EN-L

Node No	P-X [kN]	P-Y [kN]	P-Z [kN]	M-X [kNm]	M-Y [kNm]	M-Z [kNm]
1126			6.2			
1136			6.2			
1226			0.5			
1236			0.5			
2126			-63.9			
2136			-58.3			
2226			-34.5			
2236			-40.0			
3126			-4.7			
3136			-4.7			
3226			-6.5			
3236			-6.5			
4126			1.8			
4136			1.8			
4226			1.1			
4236			1.1			

Nodal Reactions and Residual Forces
Loadcase 122 K-EN-L

Node No	P-X [kN]	P-Y [kN]	P-Z [kN]	M-X [kNm]	M-Y [kNm]	M-Z [kNm]
1126			8.2			
1136			8.2			
1226			3.4			
1236			3.4			
2126			-61.9			
2136			-51.9			
2226			-31.6			
2236			-41.6			
3126			-13.7			
3136			-13.7			
3226			-10.5			
3236			-10.5			
4126			4.5			
4136			4.5			
4226			1.6			
4236			1.6			

SOFiSTiK AG - www.sofistik.de

Composite bridge 38+50+38, b=14.25m, 2x2HL1100R HISTAR460 , slab 0.30m C30/37
Obciazenia zmienne

Nodal Reactions and Residual Forces
Loadcase 123 K-EN-L

Node No	P-X [kN]	P-Y [kN]	P-Z [kN]	M-X [kNm]	M-Y [kNm]	M-Z [kNm]
1126			9.6			
1136			9.6			
1226			4.5			
1236			4.5			
2126			-57.1			
2136			-45.3			
2226			-27.3			
2236			-39.1			
3126			-23.3			
3136			-23.3			
3226			-16.0			
3236			-16.0			
4126			7.1			
4136			7.1			
4226			2.4			
4236			2.4			

Nodal Reactions and Residual Forces
Loadcase 124 K-EN-L

Node No	P-X [kN]	P-Y [kN]	P-Z [kN]	M-X [kNm]	M-Y [kNm]	M-Z [kNm]
1126			9.7			
1136			9.7			
1226			4.5			
1236			4.5			
2126			-49.0			
2136			-37.4			
2226			-22.1			
2236			-33.7			
3126			-33.3			
3136			-33.3			
3226			-22.2			
3236			-22.2			
4126			9.2			
4136			9.2			
4226			3.3			
4236			3.3			

Nodal Reactions and Residual Forces
Loadcase 125 K-EN-L

Node No	P-X [kN]	P-Y [kN]	P-Z [kN]	M-X [kNm]	M-Y [kNm]	M-Z [kNm]
1126			8.6			
1136			8.6			
1226			3.9			
1236			3.9			
2126			-38.7			
2136			-28.8			
2226			-16.9			
2236			-26.7			
3126			-42.9			
3136			-42.9			
3226			-28.2			
3236			-28.2			
4126			10.4			
4136			10.4			
4226			3.8			
4236			3.8			

SOFiSTiK AG - www.sofistik.de

Composite bridge 38+50+38, b=14.25m, 2x2HL1100R HISTAR460 , slab 0.30m C30/37
Obciazenia zmienne

Nodal Reactions and Residual Forces
Loadcase 126 K-EN-L

Node No	P-X [kN]	P-Y [kN]	P-Z [kN]	M-X [kNm]	M-Y [kNm]	M-Z [kNm]
1126			6.7			
1136			6.7			
1226			2.8			
1236			2.8			
2126			-27.4			
2136			-20.1			
2226			-11.9			
2236			-19.2			
3126			-51.1			
3136			-51.1			
3226			-33.3			
3236			-33.3			
4126			10.4			
4136			10.4			
4226			3.8			
4236			3.8			

Nodal Reactions and Residual Forces
Loadcase 127 K-EN-L

Node No	P-X [kN]	P-Y [kN]	P-Z [kN]	M-X [kNm]	M-Y [kNm]	M-Z [kNm]
1126			4.2			
1136			4.2			
1226			1.9			
1236			1.9			
2126			-16.3			
2136			-11.8			
2226			-7.9			
2236			-12.4			
3126			-56.8			
3136			-56.8			
3226			-36.7			
3236			-36.7			
4126			8.8			
4136			8.8			
4226			2.8			
4236			2.8			

Nodal Reactions and Residual Forces
Loadcase 128 K-EN-L

Node No	P-X [kN]	P-Y [kN]	P-Z [kN]	M-X [kNm]	M-Y [kNm]	M-Z [kNm]
1126			1.7			
1136			1.7			
1226			1.3			
1236			1.3			
2126			-5.6			
2136			-4.1			
2226			-5.6			
2236			-7.1			
3126			-61.2			
3136			-61.2			
3226			-37.2			
3236			-37.2			
4126			6.6			
4136			6.6			
4226			0.1			
4236			0.1			

SOFiSTiK AG - www.sofistik.de

Composite bridge 38+50+38, b=14.25m, 2x2HL1100R HISTAR460 , slab 0.30m C30/37
Obciazenia zmienne

Nodal Reactions and Residual Forces
Loadcase 129 K-EN-L

Node No	P-X [kN]	P-Y [kN]	P-Z [kN]	M-X [kNm]	M-Y [kNm]	M-Z [kNm]
1126			-0.3			
1136			-0.3			
1226			0.5			
1236			0.5			
2126			4.4			
2136			3.4			
2226			-4.9			
2236			-3.9			
3126			-66.3			
3136			-66.3			
3226			-33.1			
3236			-33.1			
4126			5.4			
4136			5.4			
4226			-5.6			
4236			-5.6			

Nodal Reactions and Residual Forces
Loadcase 130 K-EN-L

Node No	P-X [kN]	P-Y [kN]	P-Z [kN]	M-X [kNm]	M-Y [kNm]	M-Z [kNm]
1126			-0.3			
1136			-0.3			
1226			0.5			
1236			0.5			
2126			4.4			
2136			3.4			
2226			-4.9			
2236			-3.9			
3126			-66.3			
3136			-66.3			
3226			-33.1			
3236			-33.1			
4126			5.4			
4136			5.4			
4226			-5.6			
4236			-5.6			

Nodal Reactions and Residual Forces
Loadcase 131 K-EN-L

Node No	P-X [kN]	P-Y [kN]	P-Z [kN]	M-X [kNm]	M-Y [kNm]	M-Z [kNm]
1126			-1.1			
1136			-1.1			
1226			-0.5			
1236			-0.5			
2126			6.9			
2136			5.3			
2226			-0.7			
2236			0.9			
3126			-62.2			
3136			-62.2			
3226			-35.9			
3236			-35.9			
4126			-0.4			
4136			-0.4			
4226			-6.1			
4236			-6.1			

SOFiSTiK AG - www.sofistik.de

Composite bridge 38+50+38, b=14.25m, 2x2HL1100R HISTAR460 , slab 0.30m C30/37
Obciazenia zmienne

Nodal Reactions and Residual Forces
Loadcase 132 K-EN-L

Node No	P-X [kN]	P-Y [kN]	P-Z [kN]	M-X [kNm]	M-Y [kNm]	M-Z [kNm]
1126			-1.5			
1136			-1.5			
1226			-1.4			
1236			-1.4			
2126			8.7			
2136			6.7			
2226			2.7			
2236			4.7			
3126			-57.9			
3136			-57.9			
3226			-36.6			
3236			-36.6			
4126			-6.0			
4136			-6.0			
4226			-7.9			
4236			-7.9			

Nodal Reactions and Residual Forces
Loadcase 133 K-EN-L

Node No	P-X [kN]	P-Y [kN]	P-Z [kN]	M-X [kNm]	M-Y [kNm]	M-Z [kNm]
1126			-1.7			
1136			-1.7			
1226			-2.1			
1236			-2.1			
2126			10.4			
2136			8.0			
2226			4.4			
2236			6.8			
3126			-54.0			
3136			-54.0			
3226			-34.4			
3236			-34.4			
4126			-11.0			
4136			-11.0			
4226			-11.5			
4236			-11.5			

Nodal Reactions and Residual Forces
Loadcase 134 K-EN-L

Node No	P-X [kN]	P-Y [kN]	P-Z [kN]	M-X [kNm]	M-Y [kNm]	M-Z [kNm]
1126			-1.8			
1136			-1.8			
1226			-2.4			
1236			-2.4			
2126			10.9			
2136			8.5			
2226			5.3			
2236			7.7			
3126			-48.4			
3136			-48.4			
3226			-30.9			
3236			-30.9			
4126			-17.0			
4136			-17.0			
4226			-15.7			
4236			-15.7			

SOFiSTiK AG - www.sofistik.de

Composite bridge 38+50+38, b=14.25m, 2x2HL1100R HISTAR460 , slab 0.30m C30/37
Obciazenia zmienne

Nodal Reactions and Residual Forces
Loadcase 135 K-EN-L

Node No	P-X [kN]	P-Y [kN]	P-Z [kN]	M-X [kNm]	M-Y [kNm]	M-Z [kNm]
1126			-1.7			
1136			-1.7			
1226			-2.3			
1236			-2.3			
2126			10.2			
2136			8.0			
2226			5.3			
2236			7.5			
3126			-40.7			
3136			-40.7			
3226			-26.3			
3236			-26.3			
4126			-24.0			
4136			-24.0			
4226			-20.4			
4236			-20.4			

Nodal Reactions and Residual Forces
Loadcase 136 K-EN-L

Node No	P-X [kN]	P-Y [kN]	P-Z [kN]	M-X [kNm]	M-Y [kNm]	M-Z [kNm]
1126			-1.5			
1136			-1.5			
1226			-1.8			
1236			-1.8			
2126			8.5			
2136			6.6			
2226			4.6			
2236			6.4			
3126			-31.4			
3136			-31.4			
3226			-21.0			
3236			-21.0			
4126			-31.9			
4136			-32.0			
4226			-25.3			
4236			-25.3			

Nodal Reactions and Residual Forces
Loadcase 137 K-EN-L

Node No	P-X [kN]	P-Y [kN]	P-Z [kN]	M-X [kNm]	M-Y [kNm]	M-Z [kNm]
1126			-1.4			
1136			-1.4			
1226			-1.0			
1236			-1.0			
2126			6.0			
2136			4.7			
2226			3.4			
2236			4.8			
3126			-20.6			
3136			-20.6			
3226			-15.5			
3236			-15.5			
4126			-40.9			
4136			-40.9			
4226			-30.1			
4236			-30.1			

SOFiSTiK AG - www.sofistik.de

Composite bridge 38+50+38, b=14.25m, 2x2HL1100R HISTAR460 , slab 0.30m C30/37
Obciazenia zmienne

Nodal Reactions and Residual Forces
Loadcase 138 K-EN-L

Node No	P-X [kN]	P-Y [kN]	P-Z [kN]	M-X [kNm]	M-Y [kNm]	M-Z [kNm]
1126			-1.4			
1136			-1.4			
1226			0.1			
1236			0.1			
2126			3.0			
2136			2.2			
2226			2.0			
2236			2.8			
3126			-8.3			
3136			-8.3			
3226			-10.2			
3236			-10.2			
4126			-50.7			
4136			-50.7			
4226			-34.6			
4236			-34.6			

Nodal Reactions and Residual Forces
Loadcase 139 K-EN-L

Node No	P-X [kN]	P-Y [kN]	P-Z [kN]	M-X [kNm]	M-Y [kNm]	M-Z [kNm]
1126			-0.7			
1136			-0.7			
1226			0.6			
1236			0.6			
2126			0.1			
2136			-0.1			
2226			0.3			
2236			0.5			
3126			1.6			
3136			1.6			
3226			-3.0			
3236			-3.0			
4126			-29.9			
4136			-29.9			
4226			-19.0			
4236			-19.0			

Nodal Reactions and Residual Forces
Loadcase 210 K-EN-L

Node No	P-X [kN]	P-Y [kN]	P-Z [kN]	M-X [kNm]	M-Y [kNm]	M-Z [kNm]
1126			-18.6			
1136			-18.6			
1226			-30.3			
1236			-30.3			
2126			1.3			
2136			2.6			
2226			-2.7			
2236			-4.0			
3226			0.4			
3236			0.4			
4126			-0.7			
4136			-0.7			
4226			0.6			
4236			0.6			

SOFiSTiK AG - www.sofistik.de

Composite bridge 38+50+38, b=14.25m, 2x2HL1100R HISTAR460 , slab 0.30m C30/37
Obciazenia zmienne

Nodal Reactions and Residual Forces
Loadcase 211 K-EN-L

Node No	P-X [kN]	P-Y [kN]	P-Z [kN]	M-X [kNm]	M-Y [kNm]	M-Z [kNm]
1126			-33.0			
1136			-33.0			
1226			-52.3			
1236			-52.3			
2126			-5.5			
2136			2.5			
2226			-12.9			
2236			-20.9			
3126			1.7			
3136			1.7			
3226			3.3			
3236			3.3			
4126			-1.8			
4136			-1.8			
4226			0.5			
4236			0.5			

Nodal Reactions and Residual Forces
Loadcase 212 K-EN-L

Node No	P-X [kN]	P-Y [kN]	P-Z [kN]	M-X [kNm]	M-Y [kNm]	M-Z [kNm]
1126			-28.3			
1136			-28.3			
1226			-42.7			
1236			-42.7			
2126			-14.5			
2136			-0.3			
2226			-21.6			
2236			-35.8			
3126			3.6			
3136			3.6			
3226			5.9			
3236			5.9			
4126			-2.1			
4136			-2.1			
4226			-0.4			
4236			-0.4			

Nodal Reactions and Residual Forces
Loadcase 213 K-EN-L

Node No	P-X [kN]	P-Y [kN]	P-Z [kN]	M-X [kNm]	M-Y [kNm]	M-Z [kNm]
1126			-23.7			
1136			-23.7			
1226			-33.6			
1236			-33.6			
2126			-22.5			
2136			-3.4			
2226			-30.0			
2236			-49.1			
3126			5.1			
3136			5.1			
3226			8.0			
3236			8.0			
4126			-2.4			
4136			-2.4			
4226			-1.0			
4236			-1.0			

SOFiSTiK AG - www.sofistik.de

Composite bridge 38+50+38, b=14.25m, 2x2HL1100R HISTAR460 , slab 0.30m C30/37
Obciazenia zmienne

Nodal Reactions and Residual Forces
Loadcase 214 K-EN-L

Node No	P-X [kN]	P-Y [kN]	P-Z [kN]	M-X [kNm]	M-Y [kNm]	M-Z [kNm]
1126			-19.2			
1136			-19.2			
1226			-25.2			
1236			-25.2			
2126			-29.3			
2136			-6.7			
2226			-37.8			
2236			-60.4			
3126			6.2			
3136			6.2			
3226			9.3			
3236			9.3			
4126			-2.5			
4136			-2.5			
4226			-1.4			
4236			-1.4			

Nodal Reactions and Residual Forces
Loadcase 215 K-EN-L

Node No	P-X [kN]	P-Y [kN]	P-Z [kN]	M-X [kNm]	M-Y [kNm]	M-Z [kNm]
1126			-14.6			
1136			-14.6			
1226			-18.1			
1236			-18.1			
2126			-34.8			
2136			-10.7			
2226			-44.6			
2236			-68.6			
3126			6.8			
3136			6.8			
3226			9.5			
3236			9.5			
4126			-2.5			
4136			-2.5			
4226			-1.6			
4236			-1.6			

Nodal Reactions and Residual Forces
Loadcase 216 K-EN-L

Node No	P-X [kN]	P-Y [kN]	P-Z [kN]	M-X [kNm]	M-Y [kNm]	M-Z [kNm]
1126			-9.9			
1136			-9.9			
1226			-12.7			
1236			-12.7			
2126			-38.5			
2136			-15.9			
2226			-50.0			
2236			-72.6			
3126			6.7			
3136			6.7			
3226			8.3			
3236			8.3			
4126			-2.2			
4136			-2.2			
4226			-1.6			
4236			-1.6			

SOFiSTiK AG - www.sofistik.de

Composite bridge 38+50+38, b=14.25m, 2x2HL1100R HISTAR460 , slab 0.30m C30/37
Obciazenia zmienne

Nodal Reactions and Residual Forces
Loadcase 217 K-EN-L

Node No	P-X [kN]	P-Y [kN]	P-Z [kN]	M-X [kNm]	M-Y [kNm]	M-Z [kNm]
1126			-4.6			
1136			-4.6			
1226			-9.4			
1236			-9.4			
2126			-40.7			
2136			-23.3			
2226			-53.9			
2236			-71.3			
3126			6.0			
3136			6.0			
3226			5.4			
3236			5.4			
4126			-1.5			
4136			-1.5			
4226			-1.4			
4236			-1.4			

Nodal Reactions and Residual Forces
Loadcase 218 K-EN-L

Node No	P-X [kN]	P-Y [kN]	P-Z [kN]	M-X [kNm]	M-Y [kNm]	M-Z [kNm]
1126			1.0			
1136			1.0			
1226			-7.6			
1236			-7.6			
2126			-41.5			
2136			-32.0			
2226			-56.6			
2236			-66.1			
3126			5.3			
3136			5.3			
3226			1.0			
3236			1.0			
4126			-0.8			
4136			-0.8			
4226			-0.8			
4236			-0.8			

Nodal Reactions and Residual Forces
Loadcase 219 K-EN-L

Node No	P-X [kN]	P-Y [kN]	P-Z [kN]	M-X [kNm]	M-Y [kNm]	M-Z [kNm]
1126			5.2			
1136			5.2			
1226			-5.4			
1236			-5.4			
2126			-39.4			
2136			-39.6			
2226			-60.1			
2236			-59.9			
3126			3.9			
3136			3.9			
3226			-4.3			
3236			-4.3			
4126			-0.4			
4136			-0.4			
4226			0.5			
4236			0.5			

SOFiSTiK AG - www.sofistik.de

Composite bridge 38+50+38, b=14.25m, 2x2HL1100R HISTAR460 , slab 0.30m C30/37
Obciazenia zmienne

Nodal Reactions and Residual Forces
Loadcase 220 K-EN-L

Node No	P-X [kN]	P-Y [kN]	P-Z [kN]	M-X [kNm]	M-Y [kNm]	M-Z [kNm]
1126			5.2			
1136			5.2			
1226			-5.4			
1236			-5.4			
2126			-39.4			
2136			-39.6			
2226			-60.1			
2236			-59.9			
3126			3.9			
3136			3.9			
3226			-4.3			
3236			-4.3			
4126			-0.4			
4136			-0.4			
4226			0.5			
4236			0.5			

Nodal Reactions and Residual Forces
Loadcase 221 K-EN-L

Node No	P-X [kN]	P-Y [kN]	P-Z [kN]	M-X [kNm]	M-Y [kNm]	M-Z [kNm]
1126			5.6			
1136			5.6			
1226			1.0			
1236			1.0			
2126			-29.2			
2136			-42.3			
2226			-69.2			
2236			-56.1			
3126			-0.9			
3136			-0.9			
3226			-10.3			
3236			-10.3			
4126			-0.1			
4136			-0.1			
4226			3.0			
4236			3.0			

Nodal Reactions and Residual Forces
Loadcase 222 K-EN-L

Node No	P-X [kN]	P-Y [kN]	P-Z [kN]	M-X [kNm]	M-Y [kNm]	M-Z [kNm]
1126			4.1			
1136			4.1			
1226			7.6			
1236			7.6			
2126			-18.5			
2136			-40.8			
2226			-75.1			
2236			-52.8			
3126			-5.8			
3136			-5.8			
3226			-18.4			
3236			-18.4			
4126			-0.5			
4136			-0.5			
4226			6.6			
4236			6.6			

SOFiSTiK AG - www.sofistik.de

Composite bridge 38+50+38, b=14.25m, 2x2HL1100R HISTAR460 , slab 0.30m C30/37
Obciazenia zmienne

Nodal Reactions and Residual Forces
Loadcase 223 K-EN-L

Node No	P-X [kN]	P-Y [kN]	P-Z [kN]	M-X [kNm]	M-Y [kNm]	M-Z [kNm]
1126			3.0			
1136			3.0			
1226			11.2			
1236			11.2			
2126			-11.1			
2136			-37.6			
2226			-73.3			
2236			-46.8			
3126			-10.5			
3136			-10.5			
3226			-28.8			
3236			-28.8			
4126			-0.5			
4136			-0.5			
4226			10.0			
4236			10.0			

Nodal Reactions and Residual Forces
Loadcase 224 K-EN-L

Node No	P-X [kN]	P-Y [kN]	P-Z [kN]	M-X [kNm]	M-Y [kNm]	M-Z [kNm]
1126			2.1			
1136			2.1			
1226			12.2			
1236			12.2			
2126			-6.4			
2136			-32.2			
2226			-64.8			
2236			-39.0			
3126			-15.2			
3136			-15.2			
3226			-40.4			
3236			-40.4			
4126			-0.2			
4136			-0.2			
4226			12.6			
4236			12.6			

Nodal Reactions and Residual Forces
Loadcase 225 K-EN-L

Node No	P-X [kN]	P-Y [kN]	P-Z [kN]	M-X [kNm]	M-Y [kNm]	M-Z [kNm]
1126			1.2			
1136			1.2			
1226			11.2			
1236			11.2			
2126			-3.3			
2136			-25.3			
2226			-52.2			
2236			-30.2			
3126			-20.0			
3136			-20.0			
3226			-51.2			
3236			-51.2			
4126			0.5			
4136			0.5			
4226			13.7			
4236			13.7			

SOFiSTiK AG - www.sofistik.de

Composite bridge 38+50+38, b=14.25m, 2x2HL1100R HISTAR460 , slab 0.30m C30/37
Obciazenia zmienne

Nodal Reactions and Residual Forces
Loadcase 226 K-EN-L

Node No	P-X [kN]	P-Y [kN]	P-Z [kN]	M-X [kNm]	M-Y [kNm]	M-Z [kNm]
1126			0.5			
1136			0.5			
1226			9.0			
1236			9.0			
2126			-1.1			
2136			-17.7			
2226			-38.2			
2236			-21.6			
3126			-24.9			
3136			-24.9			
3226			-59.6			
3236			-59.6			
4126			1.4			
4136			1.4			
4226			12.8			
4236			12.8			

Nodal Reactions and Residual Forces
Loadcase 227 K-EN-L

Node No	P-X [kN]	P-Y [kN]	P-Z [kN]	M-X [kNm]	M-Y [kNm]	M-Z [kNm]
1126			0.2			
1136			0.2			
1226			5.9			
1236			5.9			
2126			0.5			
2136			-10.3			
2226			-24.6			
2236			-13.9			
3126			-30.0			
3136			-30.0			
3226			-63.7			
3236			-63.7			
4126			2.7			
4136			2.7			
4226			8.9			
4236			8.9			

Nodal Reactions and Residual Forces
Loadcase 228 K-EN-L

Node No	P-X [kN]	P-Y [kN]	P-Z [kN]	M-X [kNm]	M-Y [kNm]	M-Z [kNm]
1126			0.3			
1136			0.3			
1226			2.6			
1236			2.6			
2126			2.2			
2136			-3.2			
2226			-13.4			
2236			-8.0			
3126			-35.8			
3136			-35.8			
3226			-62.6			
3236			-62.6			
4126			4.9			
4136			4.9			
4226			1.8			
4236			1.8			

SOFiSTiK AG - www.sofistik.de

Composite bridge 38+50+38, b=14.25m, 2x2HL1100R HISTAR460 , slab 0.30m C30/37
Obciazenia zmienne

Nodal Reactions and Residual Forces
Loadcase 229 K-EN-L

Node No	P-X [kN]	P-Y [kN]	P-Z [kN]	M-X [kNm]	M-Y [kNm]	M-Z [kNm]
1126			-0.3			
1136			-0.3			
1226			0.5			
1236			0.5			
2126			4.5			
2136			3.2			
2226			-5.0			
2236			-3.6			
3126			-39.6			
3136			-39.6			
3226			-59.9			
3236			-59.9			
4126			5.2			
4136			5.2			
4226			-5.4			
4236			-5.4			

Nodal Reactions and Residual Forces
Loadcase 230 K-EN-L

Node No	P-X [kN]	P-Y [kN]	P-Z [kN]	M-X [kNm]	M-Y [kNm]	M-Z [kNm]
1126			-0.3			
1136			-0.3			
1226			0.5			
1236			0.5			
2126			4.5			
2136			3.2			
2226			-5.0			
2236			-3.6			
3126			-39.6			
3136			-39.6			
3226			-59.9			
3236			-59.9			
4126			5.2			
4136			5.2			
4226			-5.4			
4236			-5.4			

Nodal Reactions and Residual Forces
Loadcase 231 K-EN-L

Node No	P-X [kN]	P-Y [kN]	P-Z [kN]	M-X [kNm]	M-Y [kNm]	M-Z [kNm]
1126			-0.9			
1136			-0.9			
1226			-0.7			
1236			-0.7			
2126			4.2			
2136			5.6			
2226			2.1			
2236			0.6			
3126			-36.7			
3136			-36.7			
3226			-61.3			
3236			-61.3			
4126			1.6			
4136			1.6			
4226			-8.1			
4236			-8.1			

SOFiSTiK AG - www.sofistik.de

Composite bridge 38+50+38, b=14.25m, 2x2HL1100R HISTAR460 , slab 0.30m C30/37
Obciazenia zmienne

Nodal Reactions and Residual Forces
Loadcase 232 K-EN-L

Node No	P-X [kN]	P-Y [kN]	P-Z [kN]	M-X [kNm]	M-Y [kNm]	M-Z [kNm]
1126			-1.8			
1136			-1.8			
1226			-1.2			
1236			-1.2			
2126			3.5			
2136			7.0			
2226			7.9			
2236			4.4			
3126			-31.8			
3136			-31.8			
3226			-62.7			
3236			-62.7			
4126			-3.6			
4136			-3.6			
4226			-10.3			
4236			-10.3			

Nodal Reactions and Residual Forces
Loadcase 233 K-EN-L

Node No	P-X [kN]	P-Y [kN]	P-Z [kN]	M-X [kNm]	M-Y [kNm]	M-Z [kNm]
1126			-2.5			
1136			-2.5			
1226			-1.3			
1236			-1.3			
2126			3.3			
2136			8.1			
2226			11.5			
2236			6.8			
3126			-27.2			
3136			-27.2			
3226			-61.4			
3236			-61.4			
4126			-8.6			
4136			-8.6			
4226			-14.0			
4236			-14.0			

Nodal Reactions and Residual Forces
Loadcase 234 K-EN-L

Node No	P-X [kN]	P-Y [kN]	P-Z [kN]	M-X [kNm]	M-Y [kNm]	M-Z [kNm]
1126			-2.9			
1136			-2.9			
1226			-1.2			
1236			-1.2			
2126			3.2			
2136			8.4			
2226			13.0			
2236			7.9			
3126			-22.8			
3136			-22.8			
3226			-56.6			
3236			-56.6			
4126			-13.2			
4136			-13.2			
4226			-19.6			
4236			-19.6			

SOFiSTiK AG - www.sofistik.de

Composite bridge 38+50+38, b=14.25m, 2x2HL1100R HISTAR460 , slab 0.30m C30/37
Obciazenia zmienne

Nodal Reactions and Residual Forces
Loadcase 235 K-EN-L

Node No	P-X [kN]	P-Y [kN]	P-Z [kN]	M-X [kNm]	M-Y [kNm]	M-Z [kNm]
1126			-2.9			
1136			-2.9			
1226			-1.1			
1236			-1.1			
2126			2.9			
2136			7.7			
2226			12.5			
2236			7.8			
3126			-18.2			
3136			-18.2			
3226			-49.0			
3236			-49.0			
4126			-17.7			
4136			-17.7			
4226			-26.7			
4236			-26.7			

Nodal Reactions and Residual Forces
Loadcase 236 K-EN-L

Node No	P-X [kN]	P-Y [kN]	P-Z [kN]	M-X [kNm]	M-Y [kNm]	M-Z [kNm]
1126			-2.7			
1136			-2.7			
1226			-0.7			
1236			-0.7			
2126			2.4			
2136			6.4			
2226			10.7			
2236			6.7			
3126			-13.2			
3136			-13.2			
3226			-39.4			
3236			-39.4			
4126			-22.4			
4136			-22.3			
4226			-34.9			
4236			-34.9			

Nodal Reactions and Residual Forces
Loadcase 237 K-EN-L

Node No	P-X [kN]	P-Y [kN]	P-Z [kN]	M-X [kNm]	M-Y [kNm]	M-Z [kNm]
1126			-2.3			
1136			-2.3			
1226			-0.2			
1236			-0.2			
2126			1.7			
2136			4.4			
2226			7.8			
2236			5.0			
3126			-7.7			
3136			-7.7			
3226			-28.4			
3236			-28.4			
4126			-27.2			
4136			-27.2			
4226			-43.7			
4236			-43.7			

SOFiSTiK AG - www.sofistik.de

Composite bridge 38+50+38, b=14.25m, 2x2HL1100R HISTAR460 , slab 0.30m C30/37
Obciazenia zmienne

Nodal Reactions and Residual Forces
Loadcase 238 K-EN-L

Node No	P-X [kN]	P-Y [kN]	P-Z [kN]	M-X [kNm]	M-Y [kNm]	M-Z [kNm]
1126			-1.9			
1136			-1.9			
1226			0.6			
1236			0.6			
2126			0.8			
2136			2.1			
2226			4.3			
2236			2.9			
3126			-1.6			
3136			-1.6			
3226			-16.8			
3236			-16.8			
4126			-32.5			
4136			-32.4			
4226			-52.8			
4236			-52.8			

Nodal Reactions and Residual Forces
Loadcase 239 K-EN-L

Node No	P-X [kN]	P-Y [kN]	P-Z [kN]	M-X [kNm]	M-Y [kNm]	M-Z [kNm]
1126			-0.7			
1136			-0.7			
1226			0.6			
1236			0.6			
2126			-0.1			
2136			-0.1			
2226			0.5			
2236			0.5			
3126			2.0			
3136			2.0			
3226			-3.4			
3236			-3.4			
4126			-18.6			
4136			-18.6			
4226			-30.3			
4236			-30.3			

Nodal Reactions and Residual Forces
Loadcase 410 K-EN-R

Node No	P-X [kN]	P-Y [kN]	P-Z [kN]	M-X [kNm]	M-Y [kNm]	M-Z [kNm]
1126			-8.1			
1136			-8.2			
1226			-40.7			
1236			-40.7			
2126			0.3			
2136			2.5			
2226			-1.7			
2236			-3.9			
3226			0.4			
3236			0.4			
4126			-0.4			
4136			-0.4			
4226			0.2			
4236			0.2			

SOFiSTiK AG - www.sofistik.de

Composite bridge 38+50+38, b=14.25m, 2x2HL1100R HISTAR460 , slab 0.30m C30/37
Obciazenia zmienne

Nodal Reactions and Residual Forces
Loadcase 411 K-EN-R

Node No	P-X [kN]	P-Y [kN]	P-Z [kN]	M-X [kNm]	M-Y [kNm]	M-Z [kNm]
1126			-16.3			
1136			-16.3			
1226			-68.9			
1236			-68.9			
2126			-5.8			
2136			10.9			
2226			-12.8			
2236			-29.5			
3126			1.2			
3136			1.2			
3226			3.9			
3236			3.9			
4126			-1.4			
4136			-1.4			
4226			0.1			
4236			0.1			

Nodal Reactions and Residual Forces
Loadcase 412 K-EN-R

Node No	P-X [kN]	P-Y [kN]	P-Z [kN]	M-X [kNm]	M-Y [kNm]	M-Z [kNm]
1126			-16.4			
1136			-16.4			
1226			-54.5			
1236			-54.5			
2126			-12.7			
2136			17.6			
2226			-23.5			
2236			-53.8			
3126			2.4			
3136			2.4			
3226			7.2			
3236			7.2			
4126			-2.2			
4136			-2.2			
4226			-0.3			
4236			-0.3			

Nodal Reactions and Residual Forces
Loadcase 413 K-EN-R

Node No	P-X [kN]	P-Y [kN]	P-Z [kN]	M-X [kNm]	M-Y [kNm]	M-Z [kNm]
1126			-16.0			
1136			-16.0			
1226			-41.2			
1236			-41.2			
2126			-18.9			
2136			22.8			
2226			-33.8			
2236			-75.5			
3126			3.4			
3136			3.4			
3226			9.8			
3236			9.8			
4126			-2.8			
4136			-2.8			
4226			-0.6			
4236			-0.6			

SOFiSTiK AG - www.sofistik.de

Composite bridge 38+50+38, b=14.25m, 2x2HL1100R HISTAR460 , slab 0.30m C30/37
Obciazenia zmienne

Nodal Reactions and Residual Forces
Loadcase 414 K-EN-R

Node No	P-X [kN]	P-Y [kN]	P-Z [kN]	M-X [kNm]	M-Y [kNm]	M-Z [kNm]
1126			-14.8			
1136			-14.9			
1226			-29.4			
1236			-29.4			
2126			-23.9			
2136			25.7			
2226			-43.5			
2236			-93.0			
3126			4.2			
3136			4.2			
3226			11.5			
3236			11.5			
4126			-3.0			
4136			-3.0			
4226			-1.0			
4236			-1.0			

Nodal Reactions and Residual Forces
Loadcase 415 K-EN-R

Node No	P-X [kN]	P-Y [kN]	P-Z [kN]	M-X [kNm]	M-Y [kNm]	M-Z [kNm]
1126			-12.8			
1136			-12.8			
1226			-19.8			
1236			-19.8			
2126			-27.2			
2136			25.4			
2226			-52.3			
2236			-105.0			
3126			4.5			
3136			4.5			
3226			11.9			
3236			11.9			
4126			-2.9			
4136			-2.9			
4226			-1.3			
4236			-1.3			

Nodal Reactions and Residual Forces
Loadcase 416 K-EN-R

Node No	P-X [kN]	P-Y [kN]	P-Z [kN]	M-X [kNm]	M-Y [kNm]	M-Z [kNm]
1126			-9.6			
1136			-9.6			
1226			-12.9			
1236			-12.9			
2126			-28.4			
2136			21.1			
2226			-60.4			
2236			-109.8			
3126			4.4			
3136			4.4			
3226			10.7			
3236			10.7			
4126			-2.3			
4136			-2.3			
4226			-1.5			
4236			-1.5			

SOFiSTiK AG - www.sofistik.de

Composite bridge 38+50+38, b=14.25m, 2x2HL1100R HISTAR460 , slab 0.30m C30/37
Obciazenia zmienne

Nodal Reactions and Residual Forces
Loadcase 417 K-EN-R

Node No	P-X [kN]	P-Y [kN]	P-Z [kN]	M-X [kNm]	M-Y [kNm]	M-Z [kNm]
1126			-5.2			
1136			-5.2			
1226			-8.7			
1236			-8.7			
2126			-26.8			
2136			12.1			
2226			-68.0			
2236			-106.8			
3126			3.9			
3136			3.9			
3226			7.7			
3236			7.7			
4126			-1.3			
4136			-1.3			
4226			-1.6			
4236			-1.6			

Nodal Reactions and Residual Forces
Loadcase 418 K-EN-R

Node No	P-X [kN]	P-Y [kN]	P-Z [kN]	M-X [kNm]	M-Y [kNm]	M-Z [kNm]
1126			-0.7			
1136			-0.7			
1226			-5.8			
1236			-5.8			
2126			-21.7			
2136			0.1			
2226			-76.5			
2236			-98.4			
3126			2.9			
3136			2.9			
3226			3.4			
3236			3.4			
4126			-0.4			
4136			-0.4			
4226			-1.2			
4236			-1.2			

Nodal Reactions and Residual Forces
Loadcase 419 K-EN-R

Node No	P-X [kN]	P-Y [kN]	P-Z [kN]	M-X [kNm]	M-Y [kNm]	M-Z [kNm]
1126			2.2			
1136			2.2			
1226			-2.4			
1236			-2.4			
2126			-12.0			
2136			-12.1			
2226			-87.6			
2236			-87.4			
3126			1.8			
3136			1.8			
3226			-2.2			
3236			-2.2			
4126			-0.3			
4136			-0.3			
4226			0.4			
4236			0.4			

SOFiSTiK AG - www.sofistik.de

Composite bridge 38+50+38, b=14.25m, 2x2HL1100R HISTAR460 , slab 0.30m C30/37
Obciazenia zmienne

Nodal Reactions and Residual Forces
Loadcase 420 K-EN-R

Node No	P-X [kN]	P-Y [kN]	P-Z [kN]	M-X [kNm]	M-Y [kNm]	M-Z [kNm]
1126			2.2			
1136			2.2			
1226			-2.4			
1236			-2.4			
2126			-12.0			
2136			-12.1			
2226			-87.6			
2236			-87.4			
3126			1.8			
3136			1.8			
3226			-2.2			
3236			-2.2			
4126			-0.3			
4136			-0.3			
4226			0.4			
4236			0.4			

Nodal Reactions and Residual Forces
Loadcase 421 K-EN-R

Node No	P-X [kN]	P-Y [kN]	P-Z [kN]	M-X [kNm]	M-Y [kNm]	M-Z [kNm]
1126			2.6			
1136			2.6			
1226			4.1			
1236			4.1			
2126			4.3			
2136			-24.6			
2226			-102.8			
2236			-73.9			
3126			0.9			
3136			0.9			
3226			-12.1			
3236			-12.1			
4126			-1.9			
4136			-1.9			
4226			4.8			
4236			4.8			

Nodal Reactions and Residual Forces
Loadcase 422 K-EN-R

Node No	P-X [kN]	P-Y [kN]	P-Z [kN]	M-X [kNm]	M-Y [kNm]	M-Z [kNm]
1126			-0.2			
1136			-0.2			
1226			12.0			
1236			12.0			
2126			19.5			
2136			-29.7			
2226			-113.3			
2236			-64.0			
3126			0.7			
3136			0.7			
3226			-24.8			
3236			-24.8			
4126			-4.7			
4136			-4.7			
4226			10.9			
4236			10.9			

SOFiSTiK AG - www.sofistik.de

Composite bridge 38+50+38, b=14.25m, 2x2HL1100R HISTAR460 , slab 0.30m C30/37
Obciazenia zmienne

Nodal Reactions and Residual Forces
Loadcase 423 K-EN-R

Node No	P-X [kN]	P-Y [kN]	P-Z [kN]	M-X [kNm]	M-Y [kNm]	M-Z [kNm]
1126			-2.8			
1136			-2.8			
1226			17.1			
1236			17.0			
2126			28.1			
2136			-30.3			
2226			-112.6			
2236			-54.2			
3126			0.6			
3136			0.6			
3226			-39.9			
3236			-39.9			
4126			-6.9			
4136			-6.9			
4226			16.5			
4236			16.5			

Nodal Reactions and Residual Forces
Loadcase 424 K-EN-R

Node No	P-X [kN]	P-Y [kN]	P-Z [kN]	M-X [kNm]	M-Y [kNm]	M-Z [kNm]
1126			-4.3			
1136			-4.3			
1226			18.6			
1236			18.6			
2126			29.9			
2136			-27.4			
2226			-101.2			
2236			-43.8			
3126			0.4			
3136			0.4			
3226			-55.9			
3236			-55.9			
4126			-8.0			
4136			-8.0			
4226			20.5			
4236			20.5			

Nodal Reactions and Residual Forces
Loadcase 425 K-EN-R

Node No	P-X [kN]	P-Y [kN]	P-Z [kN]	M-X [kNm]	M-Y [kNm]	M-Z [kNm]
1126			-4.9			
1136			-4.9			
1226			17.4			
1236			17.4			
2126			27.0			
2136			-22.2			
2226			-82.6			
2236			-33.3			
3126			-0.4			
3136			-0.4			
3226			-70.9			
3236			-70.9			
4126			-7.8			
4136			-7.8			
4226			22.1			
4236			22.1			

SOFiSTiK AG - www.sofistik.de

Composite bridge 38+50+38, b=14.25m, 2x2HL1100R HISTAR460 , slab 0.30m C30/37
Obciazenia zmienne

Nodal Reactions and Residual Forces
Loadcase 426 K-EN-R

Node No	P-X [kN]	P-Y [kN]	P-Z [kN]	M-X [kNm]	M-Y [kNm]	M-Z [kNm]
1126			-4.6			
1136			-4.6			
1226			14.1			
1236			14.1			
2126			21.4			
2136			-15.9			
2226			-60.7			
2236			-23.4			
3126			-2.3			
3136			-2.3			
3226			-82.3			
3236			-82.3			
4126			-6.3			
4136			-6.3			
4226			20.6			
4236			20.6			

Nodal Reactions and Residual Forces
Loadcase 427 K-EN-R

Node No	P-X [kN]	P-Y [kN]	P-Z [kN]	M-X [kNm]	M-Y [kNm]	M-Z [kNm]
1126			-3.2			
1136			-3.2			
1226			9.3			
1236			9.3			
2126			14.5			
2136			-9.4			
2226			-38.6			
2236			-14.7			
3126			-5.8			
3136			-5.8			
3226			-88.0			
3236			-88.0			
4126			-3.2			
4136			-3.2			
4226			14.9			
4236			14.9			

Nodal Reactions and Residual Forces
Loadcase 428 K-EN-R

Node No	P-X [kN]	P-Y [kN]	P-Z [kN]	M-X [kNm]	M-Y [kNm]	M-Z [kNm]
1126			-1.1			
1136			-1.1			
1226			4.0			
1236			4.0			
2126			7.7			
2136			-3.7			
2226			-18.8			
2236			-7.4			
3126			-10.4			
3136			-10.4			
3226			-88.1			
3236			-88.1			
4126			0.9			
4136			0.9			
4226			5.8			
4236			5.8			

SOFiSTiK AG - www.sofistik.de

Composite bridge 38+50+38, b=14.25m, 2x2HL1100R HISTAR460 , slab 0.30m C30/37
Obciazenia zmienne

Nodal Reactions and Residual Forces
Loadcase 429 K-EN-R

Node No	P-X [kN]	P-Y [kN]	P-Z [kN]	M-X [kNm]	M-Y [kNm]	M-Z [kNm]
1126			-0.2			
1136			-0.2			
1226			0.4			
1236			0.4			
2126			2.5			
2136			1.2			
2226			-2.9			
2236			-1.6			
3126			-12.1			
3136			-12.1			
3226			-87.5			
3236			-87.5			
4126			2.1			
4136			2.1			
4226			-2.3			
4236			-2.3			

Nodal Reactions and Residual Forces
Loadcase 430 K-EN-R

Node No	P-X [kN]	P-Y [kN]	P-Z [kN]	M-X [kNm]	M-Y [kNm]	M-Z [kNm]
1126			-0.2			
1136			-0.2			
1226			0.4			
1236			0.4			
2126			2.5			
2136			1.2			
2226			-2.9			
2236			-1.6			
3126			-12.1			
3136			-12.1			
3226			-87.5			
3236			-87.5			
4126			2.1			
4136			2.1			
4226			-2.3			
4236			-2.3			

Nodal Reactions and Residual Forces
Loadcase 431 K-EN-R

Node No	P-X [kN]	P-Y [kN]	P-Z [kN]	M-X [kNm]	M-Y [kNm]	M-Z [kNm]
1126			-0.8			
1136			-0.8			
1226			-0.8			
1236			-0.8			
2126			-0.1			
2136			4.3			
2226			6.4			
2236			2.0			
3126			-10.7			
3136			-10.7			
3226			-87.5			
3236			-87.5			
4126			0.6			
4136			0.6			
4226			-7.1			
4236			-7.1			

SOFiSTiK AG - www.sofistik.de

Composite bridge 38+50+38, b=14.25m, 2x2HL1100R HISTAR460 , slab 0.30m C30/37
Obciazenia zmienne

Nodal Reactions and Residual Forces
Loadcase 432 K-EN-R

Node No	P-X [kN]	P-Y [kN]	P-Z [kN]	M-X [kNm]	M-Y [kNm]	M-Z [kNm]
1126			-2.0			
1136			-2.0			
1226			-1.0			
1236			-1.0			
2126			-1.9			
2136			6.5			
2226			13.4			
2236			5.0			
3126			-7.2			
3136			-7.2			
3226			-87.5			
3236			-87.5			
4126			-2.9			
4136			-2.9			
4226			-10.9			
4236			-10.9			

Nodal Reactions and Residual Forces
Loadcase 433 K-EN-R

Node No	P-X [kN]	P-Y [kN]	P-Z [kN]	M-X [kNm]	M-Y [kNm]	M-Z [kNm]
1126			-3.2			
1136			-3.2			
1226			-0.7			
1236			-0.7			
2126			-2.9			
2136			7.8			
2226			18.0			
2236			7.2			
3126			-3.5			
3136			-3.5			
3226			-85.2			
3236			-85.2			
4126			-6.7			
4136			-6.7			
4226			-15.7			
4236			-15.7			

Nodal Reactions and Residual Forces
Loadcase 434 K-EN-R

Node No	P-X [kN]	P-Y [kN]	P-Z [kN]	M-X [kNm]	M-Y [kNm]	M-Z [kNm]
1126			-3.8			
1136			-3.8			
1226			-0.4			
1236			-0.4			
2126			-3.3			
2136			8.1			
2226			19.7			
2236			8.2			
3126			-0.8			
3136			-0.8			
3226			-78.8			
3236			-78.8			
4126			-9.7			
4136			-9.7			
4226			-22.9			
4236			-22.9			

SOFiSTiK AG - www.sofistik.de

Composite bridge 38+50+38, b=14.25m, 2x2HL1100R HISTAR460 , slab 0.30m C30/37
Obciazenia zmienne

Nodal Reactions and Residual Forces
Loadcase 435 K-EN-R

Node No	P-X [kN]	P-Y [kN]	P-Z [kN]	M-X [kNm]	M-Y [kNm]	M-Z [kNm]
1126			-3.8			
1136			-3.8			
1226			-0.2			
1236			-0.2			
2126			-3.2			
2136			7.6			
2226			18.8			
2236			8.1			
3126			1.0			
3136			1.0			
3226			-68.3			
3236			-68.3			
4126			-11.9			
4136			-11.9			
4226			-32.3			
4236			-32.4			

Nodal Reactions and Residual Forces
Loadcase 436 K-EN-R

Node No	P-X [kN]	P-Y [kN]	P-Z [kN]	M-X [kNm]	M-Y [kNm]	M-Z [kNm]
1126			-3.4			
1136			-3.4			
1226			0.0			
1236			0.0			
2126			-2.7			
2136			6.3			
2226			15.9			
2236			7.0			
3126			2.0			
3136			2.0			
3226			-54.7			
3236			-54.7			
4126			-13.5			
4136			-13.5			
4226			-43.6			
4236			-43.6			

Nodal Reactions and Residual Forces
Loadcase 437 K-EN-R

Node No	P-X [kN]	P-Y [kN]	P-Z [kN]	M-X [kNm]	M-Y [kNm]	M-Z [kNm]
1126			-2.7			
1136			-2.7			
1226			0.2			
1236			0.2			
2126			-2.0			
2136			4.4			
2226			11.6			
2236			5.1			
3126			2.4			
3136			2.4			
3226			-38.6			
3236			-38.6			
4126			-14.6			
4136			-14.5			
4226			-56.3			
4236			-56.3			

SOFiSTiK AG - www.sofistik.de

Composite bridge 38+50+38, b=14.25m, 2x2HL1100R HISTAR460 , slab 0.30m C30/37
Obciazenia zmienne

Nodal Reactions and Residual Forces
Loadcase 438 K-EN-R

Node No	P-X [kN]	P-Y [kN]	P-Z [kN]	M-X [kNm]	M-Y [kNm]	M-Z [kNm]
1126			-1.7			
1136			-1.7			
1226			0.4			
1236			0.4			
2126			-1.2			
2136			2.2			
2226			6.3			
2236			2.8			
3126			2.5			
3136			2.5			
3226			-21.1			
3236			-21.1			
4126			-15.3			
4136			-15.3			
4226			-69.9			
4236			-69.9			

Nodal Reactions and Residual Forces
Loadcase 439 K-EN-R

Node No	P-X [kN]	P-Y [kN]	P-Z [kN]	M-X [kNm]	M-Y [kNm]	M-Z [kNm]
1126			-0.4			
1136			-0.4			
1226			0.3			
1236			0.3			
2126			-0.3			
2136			0.1			
2226			0.7			
2236			0.3			
3126			1.4			
3136			1.4			
3226			-2.8			
3236			-2.8			
4126			-8.0			
4136			-8.0			
4226			-40.9			
4236			-40.9			

Nodal Reactions and Residual Forces
Loadcase 510 K-EN-R

Node No	P-X [kN]	P-Y [kN]	P-Z [kN]	M-X [kNm]	M-Y [kNm]	M-Z [kNm]
1126			-20.2			
1136			-20.2			
1226			-28.7			
1236			-28.7			
2126			1.4			
2136			2.7			
2226			-2.8			
2236			-4.1			
3126			0.0			
3136			0.0			
3226			0.4			
3236			0.4			
4126			-0.8			
4136			-0.8			
4226			0.7			
4236			0.7			

SOFiSTiK AG - www.sofistik.de

Composite bridge 38+50+38, b=14.25m, 2x2HL1100R HISTAR460 , slab 0.30m C30/37
Obciazenia zmienne

Nodal Reactions and Residual Forces
Loadcase 511 K-EN-R

Node No	P-X [kN]	P-Y [kN]	P-Z [kN]	M-X [kNm]	M-Y [kNm]	M-Z [kNm]
1126			-35.5			
1136			-35.5			
1226			-49.8			
1236			-49.8			
2126			-5.6			
2136			1.2			
2226			-12.9			
2236			-19.6			
3126			1.8			
3136			1.8			
3226			3.2			
3236			3.2			
4126			-1.8			
4136			-1.8			
4226			0.5			
4236			0.5			

Nodal Reactions and Residual Forces
Loadcase 512 K-EN-R

Node No	P-X [kN]	P-Y [kN]	P-Z [kN]	M-X [kNm]	M-Y [kNm]	M-Z [kNm]
1126			-30.0			
1136			-30.0			
1226			-40.9			
1236			-40.9			
2126			-14.8			
2136			-3.2			
2226			-21.3			
2236			-32.8			
3126			3.8			
3136			3.8			
3226			5.7			
3236			5.7			
4126			-2.0			
4136			-2.0			
4226			-0.4			
4236			-0.4			

Nodal Reactions and Residual Forces
Loadcase 513 K-EN-R

Node No	P-X [kN]	P-Y [kN]	P-Z [kN]	M-X [kNm]	M-Y [kNm]	M-Z [kNm]
1126			-24.8			
1136			-24.8			
1226			-32.5			
1236			-32.5			
2126			-23.1			
2136			-7.6			
2226			-29.4			
2236			-44.9			
3126			5.4			
3136			5.4			
3226			7.7			
3236			7.7			
4126			-2.3			
4136			-2.3			
4226			-1.1			
4236			-1.1			

SOFiSTiK AG - www.sofistik.de

Composite bridge 38+50+38, b=14.25m, 2x2HL1100R HISTAR460 , slab 0.30m C30/37
Obciazenia zmienne

Nodal Reactions and Residual Forces
Loadcase 514 K-EN-R

Node No	P-X [kN]	P-Y [kN]	P-Z [kN]	M-X [kNm]	M-Y [kNm]	M-Z [kNm]
1126			-19.8			
1136			-19.8			
1226			-24.6			
1236			-24.6			
2126			-30.2			
2136			-11.8			
2226			-37.0			
2236			-55.3			
3126			6.5			
3136			6.5			
3226			8.9			
3236			8.9			
4126			-2.5			
4136			-2.5			
4226			-1.5			
4236			-1.5			

Nodal Reactions and Residual Forces
Loadcase 515 K-EN-R

Node No	P-X [kN]	P-Y [kN]	P-Z [kN]	M-X [kNm]	M-Y [kNm]	M-Z [kNm]
1126			-14.9			
1136			-14.9			
1226			-17.9			
1236			-17.9			
2126			-35.9			
2136			-16.5			
2226			-43.5			
2236			-62.9			
3126			7.1			
3136			7.1			
3226			9.1			
3236			9.1			
4126			-2.4			
4136			-2.4			
4226			-1.7			
4236			-1.7			

Nodal Reactions and Residual Forces
Loadcase 516 K-EN-R

Node No	P-X [kN]	P-Y [kN]	P-Z [kN]	M-X [kNm]	M-Y [kNm]	M-Z [kNm]
1126			-9.9			
1136			-9.9			
1226			-12.7			
1236			-12.7			
2126			-40.0			
2136			-21.7			
2226			-48.5			
2236			-66.8			
3126			7.0			
3136			7.0			
3226			7.9			
3236			7.9			
4126			-2.1			
4136			-2.1			
4226			-1.7			
4236			-1.7			

SOFiSTiK AG - www.sofistik.de

Composite bridge 38+50+38, b=14.25m, 2x2HL1100R HISTAR460 , slab 0.30m C30/37
Obciazenia zmienne

Nodal Reactions and Residual Forces
Loadcase 517 K-EN-R

Node No	P-X [kN]	P-Y [kN]	P-Z [kN]	M-X [kNm]	M-Y [kNm]	M-Z [kNm]
1126			-4.6			
1136			-4.6			
1226			-9.4			
1236			-9.4			
2126			-42.6			
2136			-28.6			
2226			-51.9			
2236			-65.9			
3126			6.3			
3136			6.3			
3226			5.1			
3236			5.1			
4126			-1.5			
4136			-1.5			
4226			-1.4			
4236			-1.4			

Nodal Reactions and Residual Forces
Loadcase 518 K-EN-R

Node No	P-X [kN]	P-Y [kN]	P-Z [kN]	M-X [kNm]	M-Y [kNm]	M-Z [kNm]
1126			1.1			
1136			1.1			
1226			-7.7			
1236			-7.7			
2126			-44.3			
2136			-36.7			
2226			-53.8			
2236			-61.4			
3126			5.5			
3136			5.5			
3226			0.7			
3236			0.7			
4126			-0.8			
4136			-0.8			
4226			-0.7			
4236			-0.7			

Nodal Reactions and Residual Forces
Loadcase 519 K-EN-R

Node No	P-X [kN]	P-Y [kN]	P-Z [kN]	M-X [kNm]	M-Y [kNm]	M-Z [kNm]
1126			5.6			
1136			5.6			
1226			-5.8			
1236			-5.8			
2126			-43.4			
2136			-43.7			
2226			-56.0			
2236			-55.8			
3126			4.1			
3136			4.1			
3226			-4.6			
3236			-4.6			
4126			-0.4			
4136			-0.4			
4226			0.6			
4236			0.6			

SOFiSTiK AG - www.sofistik.de

Composite bridge 38+50+38, b=14.25m, 2x2HL1100R HISTAR460 , slab 0.30m C30/37
Obciazenia zmienne

Nodal Reactions and Residual Forces
Loadcase 520 K-EN-R

Node No	P-X [kN]	P-Y [kN]	P-Z [kN]	M-X [kNm]	M-Y [kNm]	M-Z [kNm]
1126			5.6			
1136			5.6			
1226			-5.8			
1236			-5.8			
2126			-43.4			
2136			-43.7			
2226			-56.0			
2236			-55.8			
3126			4.1			
3136			4.1			
3226			-4.6			
3236			-4.6			
4126			-0.4			
4136			-0.4			
4226			0.6			
4236			0.6			

Nodal Reactions and Residual Forces
Loadcase 521 K-EN-R

Node No	P-X [kN]	P-Y [kN]	P-Z [kN]	M-X [kNm]	M-Y [kNm]	M-Z [kNm]
1126			6.0			
1136			6.0			
1226			0.7			
1236			0.7			
2126			-34.2			
2136			-44.8			
2226			-64.2			
2236			-53.6			
3126			-1.3			
3136			-1.3			
3226			-9.9			
3236			-9.9			
4126			0.2			
4136			0.2			
4226			2.8			
4236			2.8			

Nodal Reactions and Residual Forces
Loadcase 522 K-EN-R

Node No	P-X [kN]	P-Y [kN]	P-Z [kN]	M-X [kNm]	M-Y [kNm]	M-Z [kNm]
1126			4.7			
1136			4.7			
1226			6.9			
1236			6.9			
2126			-24.3			
2136			-42.4			
2226			-69.2			
2236			-51.2			
3126			-6.8			
3136			-6.8			
3226			-17.4			
3236			-17.4			
4126			0.2			
4136			0.2			
4226			6.0			
4236			6.0			

SOFiSTiK AG - www.sofistik.de

Composite bridge 38+50+38, b=14.25m, 2x2HL1100R HISTAR460 , slab 0.30m C30/37
Obciazenia zmienne

Nodal Reactions and Residual Forces
Loadcase 523 K-EN-R

Node No	P-X [kN]	P-Y [kN]	P-Z [kN]	M-X [kNm]	M-Y [kNm]	M-Z [kNm]
1126			3.9			
1136			3.9			
1226			10.3			
1236			10.3			
2126			-17.2			
2136			-38.6			
2226			-67.1			
2236			-45.7			
3126			-12.1			
3136			-12.1			
3226			-27.2			
3236			-27.2			
4126			0.5			
4136			0.5			
4226			9.0			
4236			9.0			

Nodal Reactions and Residual Forces
Loadcase 524 K-EN-R

Node No	P-X [kN]	P-Y [kN]	P-Z [kN]	M-X [kNm]	M-Y [kNm]	M-Z [kNm]
1126			3.1			
1136			3.1			
1226			11.2			
1236			11.2			
2126			-12.0			
2136			-32.9			
2226			-59.1			
2236			-38.2			
3126			-17.6			
3136			-17.6			
3226			-38.0			
3236			-38.0			
4126			1.1			
4136			1.1			
4226			11.4			
4236			11.4			

Nodal Reactions and Residual Forces
Loadcase 525 K-EN-R

Node No	P-X [kN]	P-Y [kN]	P-Z [kN]	M-X [kNm]	M-Y [kNm]	M-Z [kNm]
1126			2.2			
1136			2.2			
1226			10.2			
1236			10.2			
2126			-8.0			
2136			-25.8			
2226			-47.5			
2236			-29.8			
3126			-23.0			
3136			-23.0			
3226			-48.1			
3236			-48.1			
4126			1.8			
4136			1.8			
4226			12.4			
4236			12.4			

SOFiSTiK AG - www.sofistik.de

Composite bridge 38+50+38, b=14.25m, 2x2HL1100R HISTAR460 , slab 0.30m C30/37
Obciazenia zmienne

Nodal Reactions and Residual Forces
Loadcase 526 K-EN-R

Node No	P-X [kN]	P-Y [kN]	P-Z [kN]	M-X [kNm]	M-Y [kNm]	M-Z [kNm]
1126			1.3			
1136			1.3			
1226			8.2			
1236			8.2			
2126			-4.5			
2136			-18.0			
2226			-34.7			
2236			-21.3			
3126			-28.4			
3136			-28.4			
3226			-56.0			
3236			-56.0			
4126			2.6			
4136			2.6			
4226			11.6			
4236			11.6			

Nodal Reactions and Residual Forces
Loadcase 527 K-EN-R

Node No	P-X [kN]	P-Y [kN]	P-Z [kN]	M-X [kNm]	M-Y [kNm]	M-Z [kNm]
1126			0.8			
1136			0.8			
1226			5.4			
1236			5.4			
2126			-1.8			
2136			-10.4			
2226			-22.4			
2236			-13.7			
3126			-33.7			
3136			-33.7			
3226			-59.9			
3236			-59.9			
4126			3.6			
4136			3.6			
4226			8.0			
4236			8.0			

Nodal Reactions and Residual Forces
Loadcase 528 K-EN-R

Node No	P-X [kN]	P-Y [kN]	P-Z [kN]	M-X [kNm]	M-Y [kNm]	M-Z [kNm]
1126			0.5			
1136			0.5			
1226			2.4			
1236			2.4			
2126			1.3			
2136			-3.2			
2226			-12.5			
2236			-8.0			
3126			-39.5			
3136			-39.5			
3226			-58.9			
3236			-58.9			
4126			5.3			
4136			5.3			
4226			1.3			
4236			1.3			

SOFiSTiK AG - www.sofistik.de

Composite bridge 38+50+38, b=14.25m, 2x2HL1100R HISTAR460 , slab 0.30m C30/37
Obciazenia zmienne

Nodal Reactions and Residual Forces
Loadcase 529 K-EN-R

Node No	P-X [kN]	P-Y [kN]	P-Z [kN]	M-X [kNm]	M-Y [kNm]	M-Z [kNm]
1126			-0.3			
1136			-0.3			
1226			0.5			
1236			0.5			
2126			4.8			
2136			3.4			
2226			-5.2			
2236			-3.9			
3126			-43.6			
3136			-43.6			
3226			-55.9			
3236			-55.9			
4126			5.5			
4136			5.5			
4226			-5.8			
4236			-5.8			

Nodal Reactions and Residual Forces
Loadcase 530 K-EN-R

Node No	P-X [kN]	P-Y [kN]	P-Z [kN]	M-X [kNm]	M-Y [kNm]	M-Z [kNm]
1126			-0.3			
1136			-0.3			
1226			0.5			
1236			0.5			
2126			4.8			
2136			3.4			
2226			-5.2			
2236			-3.9			
3126			-43.6			
3136			-43.6			
3226			-55.9			
3236			-55.9			
4126			5.5			
4136			5.5			
4226			-5.8			
4236			-5.8			

Nodal Reactions and Residual Forces
Loadcase 531 K-EN-R

Node No	P-X [kN]	P-Y [kN]	P-Z [kN]	M-X [kNm]	M-Y [kNm]	M-Z [kNm]
1126			-0.9			
1136			-0.9			
1226			-0.6			
1236			-0.6			
2126			4.7			
2136			5.7			
2226			1.5			
2236			0.5			
3126			-40.5			
3136			-40.5			
3226			-57.6			
3236			-57.6			
4126			1.5			
4136			1.5			
4226			-8.1			
4236			-8.1			

SOFiSTiK AG - www.sofistik.de

Composite bridge 38+50+38, b=14.25m, 2x2HL1100R HISTAR460 , slab 0.30m C30/37
Obciazenia zmienne

Nodal Reactions and Residual Forces
Loadcase 532 K-EN-R

Node No	P-X [kN]	P-Y [kN]	P-Z [kN]	M-X [kNm]	M-Y [kNm]	M-Z [kNm]
1126			-1.7			
1136			-1.7			
1226			-1.2			
1236			-1.2			
2126			4.3			
2136			7.1			
2226			7.1			
2236			4.3			
3126			-35.5			
3136			-35.5			
3226			-59.1			
3236			-59.1			
4126			-3.8			
4136			-3.8			
4226			-10.1			
4236			-10.1			

Nodal Reactions and Residual Forces
Loadcase 533 K-EN-R

Node No	P-X [kN]	P-Y [kN]	P-Z [kN]	M-X [kNm]	M-Y [kNm]	M-Z [kNm]
1126			-2.4			
1136			-2.4			
1226			-1.4			
1236			-1.4			
2126			4.3			
2136			8.1			
2226			10.6			
2236			6.7			
3126			-30.8			
3136			-30.8			
3226			-57.7			
3236			-57.7			
4126			-8.9			
4136			-8.9			
4226			-13.7			
4236			-13.7			

Nodal Reactions and Residual Forces
Loadcase 534 K-EN-R

Node No	P-X [kN]	P-Y [kN]	P-Z [kN]	M-X [kNm]	M-Y [kNm]	M-Z [kNm]
1126			-2.8			
1136			-2.8			
1226			-1.4			
1236			-1.4			
2126			4.3			
2136			8.4			
2226			12.0			
2236			7.8			
3126			-26.2			
3136			-26.2			
3226			-53.1			
3236			-53.1			
4126			-13.7			
4136			-13.7			
4226			-19.1			
4236			-19.1			

SOFiSTiK AG - www.sofistik.de

Composite bridge 38+50+38, b=14.25m, 2x2HL1100R HISTAR460 , slab 0.30m C30/37
Obciazenia zmienne

Nodal Reactions and Residual Forces
Loadcase 535 K-EN-R

Node No	P-X [kN]	P-Y [kN]	P-Z [kN]	M-X [kNm]	M-Y [kNm]	M-Z [kNm]
1126			-2.8			
1136			-2.8			
1226			-1.2			
1236			-1.2			
2126			3.9			
2136			7.8			
2226			11.6			
2236			7.7			
3126			-21.2			
3136			-21.2			
3226			-46.0			
3236			-46.0			
4126			-18.6			
4136			-18.5			
4226			-25.8			
4236			-25.8			

Nodal Reactions and Residual Forces
Loadcase 536 K-EN-R

Node No	P-X [kN]	P-Y [kN]	P-Z [kN]	M-X [kNm]	M-Y [kNm]	M-Z [kNm]
1126			-2.5			
1136			-2.5			
1226			-0.8			
1236			-0.8			
2126			3.2			
2136			6.4			
2226			9.9			
2236			6.7			
3126			-15.5			
3136			-15.5			
3226			-37.0			
3236			-37.0			
4126			-23.7			
4136			-23.7			
4226			-33.5			
4236			-33.5			

Nodal Reactions and Residual Forces
Loadcase 537 K-EN-R

Node No	P-X [kN]	P-Y [kN]	P-Z [kN]	M-X [kNm]	M-Y [kNm]	M-Z [kNm]
1126			-2.2			
1136			-2.2			
1226			-0.2			
1236			-0.2			
2126			2.2			
2136			4.5			
2226			7.2			
2236			5.0			
3126			-9.3			
3136			-9.3			
3226			-26.8			
3236			-26.8			
4126			-29.1			
4136			-29.1			
4226			-41.8			
4236			-41.8			

SOFiSTiK AG - www.sofistik.de

Composite bridge 38+50+38, b=14.25m, 2x2HL1100R HISTAR460 , slab 0.30m C30/37
Obciazenia zmienne

Nodal Reactions and Residual Forces
Loadcase 538 K-EN-R

Node No	P-X [kN]	P-Y [kN]	P-Z [kN]	M-X [kNm]	M-Y [kNm]	M-Z [kNm]
1126			-1.8			
1136			-1.8			
1226			0.6			
1236			0.6			
2126			1.0			
2136			2.1			
2226			4.0			
2236			2.9			
3126			-2.3			
3136			-2.3			
3226			-16.2			
3236			-16.2			
4126			-35.1			
4136			-35.1			
4226			-50.2			
4236			-50.2			

Nodal Reactions and Residual Forces
Loadcase 539 K-EN-R

Node No	P-X [kN]	P-Y [kN]	P-Z [kN]	M-X [kNm]	M-Y [kNm]	M-Z [kNm]
1126			-0.8			
1136			-0.8			
1226			0.7			
1236			0.7			
2126			-0.1			
2136			-0.1			
2226			0.5			
2236			0.5			
3126			2.0			
3136			2.0			
3226			-3.4			
3236			-3.4			
4126			-20.2			
4136			-20.2			
4226			-28.7			
4236			-28.7			

Nodal Reactions and Residual Forces
Loadcase 711 q2.5-lane1-R

Node No	P-X [kN]	P-Y [kN]	P-Z [kN]	M-X [kNm]	M-Y [kNm]	M-Z [kNm]
1126			-15.7			
1136			-15.7			
1226			-44.9			
1236			-44.8			
2126			-27.3			
2136			21.1			
2226			-65.7			
2236			-114.1			
3126			4.4			
3136			4.4			
3226			10.4			
3236			10.4			
4126			-2.7			
4136			-2.7			
4226			-1.1			
4236			-1.1			

SOFiSTiK AG - www.sofistik.de

Composite bridge 38+50+38, b=14.25m, 2x2HL1100R HISTAR460 , slab 0.30m C30/37
Obciazenia zmienne

Nodal Reactions and Residual Forces
Loadcase 712 q2.5-lane2-R

Node No	P-X [kN]	P-Y [kN]	P-Z [kN]	M-X [kNm]	M-Y [kNm]	M-Z [kNm]
1126			-24.7			
1136			-24.7			
1226			-36.0			
1236			-36.0			
2126			-40.8			
2136			-22.8			
2226			-52.0			
2236			-70.0			
3126			7.3			
3136			7.3			
3226			7.4			
3236			7.4			
4126			-2.6			
4136			-2.6			
4226			-1.1			
4236			-1.1			

Nodal Reactions and Residual Forces
Loadcase 714 q2.5-remain-R

Node No	P-X [kN]	P-Y [kN]	P-Z [kN]	M-X [kNm]	M-Y [kNm]	M-Z [kNm]
1126			-28.8			
1136			-28.8			
1226			-23.8			
1236			-23.8			
2126			-45.3			
2136			-55.4			
2226			-35.1			
2236			-25.0			
3126			8.0			
3136			8.0			
3226			4.7			
3236			4.7			
4126			-1.9			
4136			-1.9			
4226			-1.3			
4236			-1.3			

Nodal Reactions and Residual Forces
Loadcase 715 deltaq6.5-lane1-R

Node No	P-X [kN]	P-Y [kN]	P-Z [kN]	M-X [kNm]	M-Y [kNm]	M-Z [kNm]
1126			-40.7			
1136			-40.7			
1226			-116.6			
1236			-116.6			
2126			-71.0			
2136			54.9			
2226			-170.9			
2236			-296.8			
3126			11.5			
3136			11.5			
3226			27.1			
3236			27.1			
4126			-6.9			
4136			-6.9			
4226			-3.0			
4236			-3.0			

SOFiSTiK AG - www.sofistik.de

Composite bridge 38+50+38, b=14.25m, 2x2HL1100R HISTAR460 , slab 0.30m C30/37
Obciazenia zmienne

Nodal Reactions and Residual Forces
Loadcase 716 deltaq6.5-lane2-R

Node No	P-X [kN]	P-Y [kN]	P-Z [kN]	M-X [kNm]	M-Y [kNm]	M-Z [kNm]
1126			-64.1			
1136			-64.1			
1226			-93.5			
1236			-93.5			
2126			-106.0			
2136			-59.2			
2226			-135.2			
2236			-182.0			
3126			18.9			
3136			18.9			
3226			19.3			
3236			19.3			
4126			-6.8			
4136			-6.8			
4226			-2.9			
4236			-2.9			

Nodal Reactions and Residual Forces
Loadcase 721 q2.5-lane1-R

Node No	P-X [kN]	P-Y [kN]	P-Z [kN]	M-X [kNm]	M-Y [kNm]	M-Z [kNm]
1126			-3.6			
1136			-3.6			
1226			20.1			
1236			20.1			
2126			31.1			
2136			-35.5			
2226			-141.3			
2236			-74.7			
3126			-4.5			
3136			-4.5			
3226			-105.7			
3236			-105.7			
4126			-7.7			
4136			-7.7			
4226			24.2			
4236			24.2			

Nodal Reactions and Residual Forces
Loadcase 722 q2.5-lane2-R

Node No	P-X [kN]	P-Y [kN]	P-Z [kN]	M-X [kNm]	M-Y [kNm]	M-Z [kNm]
1126			5.3			
1136			5.3			
1226			11.1			
1236			11.1			
2126			-24.9			
2136			-49.4			
2226			-85.2			
2236			-60.7			
3126			-38.0			
3136			-38.0			
3226			-72.1			
3236			-72.1			
4126			3.8			
4136			3.8			
4226			12.6			
4236			12.6			

SOFiSTiK AG - www.sofistik.de

Composite bridge 38+50+38, b=14.25m, 2x2HL1100R HISTAR460 , slab 0.30m C30/37
Obciazenia zmienne

Nodal Reactions and Residual Forces
Loadcase 724 q2.5-remain-R

Node No	P-X [kN]	P-Y [kN]	P-Z [kN]	M-X [kNm]	M-Y [kNm]	M-Z [kNm]
1126			10.9			
1136			10.9			
1226			3.3			
1236			3.3			
2126			-66.7			
2136			-53.0			
2226			-28.7			
2236			-42.4			
3126			-59.4			
3136			-59.4			
3226			-36.1			
3236			-36.1			
4126			11.7			
4136			11.7			
4226			2.4			
4236			2.4			

Nodal Reactions and Residual Forces
Loadcase 725 deltaq6.5-lane1-R

Node No	P-X [kN]	P-Y [kN]	P-Z [kN]	M-X [kNm]	M-Y [kNm]	M-Z [kNm]
1126			-9.3			
1136			-9.3			
1226			52.2			
1236			52.2			
2126			80.9			
2136			-92.4			
2226			-367.5			
2236			-194.2			
3126			-11.8			
3136			-11.8			
3226			-274.9			
3236			-274.9			
4126			-20.0			
4136			-20.0			
4226			62.9			
4236			62.9			

Nodal Reactions and Residual Forces
Loadcase 726 deltaq6.5-lane2-R

Node No	P-X [kN]	P-Y [kN]	P-Z [kN]	M-X [kNm]	M-Y [kNm]	M-Z [kNm]
1126			13.7			
1136			13.7			
1226			28.8			
1236			28.8			
2126			-64.8			
2136			-128.5			
2226			-221.4			
2236			-157.8			
3126			-98.8			
3136			-98.8			
3226			-187.5			
3236			-187.5			
4126			9.8			
4136			9.8			
4226			32.8			
4236			32.8			

SOFiSTiK AG - www.sofistik.de

Composite bridge 38+50+38, b=14.25m, 2x2HL1100R HISTAR460 , slab 0.30m C30/37
Obciazenia zmienne

Nodal Reactions and Residual Forces
Loadcase 731 q2.5-lane1-R

Node No	P-X [kN]	P-Y [kN]	P-Z [kN]	M-X [kNm]	M-Y [kNm]	M-Z [kNm]
1126			-3.5			
1136			-3.5			
1226			-0.3			
1236			-0.3			
2126			-2.7			
2136			7.6			
2226			17.5			
2236			7.2			
3126			-3.0			
3136			-3.0			
3226			-90.0			
3236			-90.0			
4126			-12.8			
4136			-12.8			
4226			-47.7			
4236			-47.7			

Nodal Reactions and Residual Forces
Loadcase 732 q2.5-lane2-R

Node No	P-X [kN]	P-Y [kN]	P-Z [kN]	M-X [kNm]	M-Y [kNm]	M-Z [kNm]
1126			-2.9			
1136			-2.9			
1226			-0.9			
1236			-0.9			
2126			4.8			
2136			8.3			
2226			9.8			
2236			6.4			
3126			-31.8			
3136			-31.8			
3226			-61.0			
3236			-61.0			
4126			-23.6			
4136			-23.6			
4226			-37.1			
4236			-37.1			

Nodal Reactions and Residual Forces
Loadcase 734 q2.5-remain-R

Node No	P-X [kN]	P-Y [kN]	P-Z [kN]	M-X [kNm]	M-Y [kNm]	M-Z [kNm]
1126			-1.7			
1136			-1.7			
1226			-1.5			
1236			-1.5			
2126			9.6			
2136			7.1			
2226			3.1			
2236			5.6			
3126			-50.4			
3136			-50.4			
3226			-30.0			
3236			-30.0			
4126			-29.4			
4136			-29.4			
4226			-23.2			
4236			-23.2			

SOFiSTiK AG - www.sofistik.de

Composite bridge 38+50+38, b=14.25m, 2x2HL1100R HISTAR460 , slab 0.30m C30/37
Obciazenia zmienne

Nodal Reactions and Residual Forces
Loadcase 735 deltaq6.5-lane1-R

Node No	P-X [kN]	P-Y [kN]	P-Z [kN]	M-X [kNm]	M-Y [kNm]	M-Z [kNm]
1126			-9.0			
1136			-9.0			
1226			-0.9			
1236			-0.9			
2126			-6.9			
2136			19.9			
2226			45.5			
2236			18.7			
3126			-7.8			
3136			-7.8			
3226			-234.1			
3236			-234.1			
4126			-33.4			
4136			-33.4			
4226			-123.9			
4236			-124.0			

Nodal Reactions and Residual Forces
Loadcase 736 deltaq6.5-lane2-R

Node No	P-X [kN]	P-Y [kN]	P-Z [kN]	M-X [kNm]	M-Y [kNm]	M-Z [kNm]
1126			-7.5			
1136			-7.5			
1226			-2.2			
1236			-2.2			
2126			12.6			
2136			21.5			
2226			25.6			
2236			16.7			
3126			-82.8			
3136			-82.8			
3226			-158.5			
3236			-158.5			
4126			-61.3			
4136			-61.2			
4226			-96.4			
4236			-96.4			

Nodal Reactions and Residual Forces
Loadcase 901 TN:+31

Node No	P-X [kN]	P-Y [kN]	P-Z [kN]	M-X [kNm]	M-Y [kNm]	M-Z [kNm]
1126			-5.0			
1136			-5.0			
1226			5.0			
1236			5.0			
2126			3.5			
2136			4.7			
2226			-3.5			
2236			-4.8			
3126			4.2			
3136			4.2			
3226			-4.2			
3236			-4.2			
4126			-4.9			
4136			-4.9			
4226			5.0			
4236			5.0			

SOFiSTiK AG - www.sofistik.de

Composite bridge 38+50+38, b=14.25m, 2x2HL1100R HISTAR460 , slab 0.30m C30/37
Obciazenia zmienne

Nodal Reactions and Residual Forces
Loadcase 902 TN:-30

Node No	P-X [kN]	P-Y [kN]	P-Z [kN]	M-X [kNm]	M-Y [kNm]	M-Z [kNm]
1126			4.8			
1136			4.8			
1226			-4.9			
1236			-4.9			
2126			-3.4			
2136			-4.6			
2226			3.4			
2236			4.6			
3126			-4.1			
3136			-4.1			
3226			4.1			
3236			4.1			
4126			4.8			
4136			4.8			
4226			-4.8			
4236			-4.8			

Nodal Reactions and Residual Forces
Loadcase 910 TM:18deg-bottom warmer

Node No	P-X [kN]	P-Y [kN]	P-Z [kN]	M-X [kNm]	M-Y [kNm]	M-Z [kNm]
1126			43.6			
1136			43.6			
1226			42.8			
1236			42.8			
2126			-43.4			
2136			-43.6			
2226			-42.9			
2236			-42.8			
3126			-43.5			
3136			-43.5			
3226			-42.9			
3236			-42.9			
4126			43.6			
4136			43.6			
4226			42.8			
4236			42.8			

Nodal Reactions and Residual Forces
Loadcase 911 TM(18:bot.warm)+wTN

Node No	P-X [kN]	P-Y [kN]	P-Z [kN]	M-X [kNm]	M-Y [kNm]	M-Z [kNm]
1126			41.8			
1136			41.8			
1226			44.6			
1236			44.6			
2126			-42.2			
2136			-41.9			
2226			-44.1			
2236			-44.5			
3126			-42.1			
3136			-42.1			
3226			-44.3			
3236			-44.3			
4126			41.8			
4136			41.8			
4226			44.5			
4236			44.5			

SOFiSTiK AG - www.sofistik.de

Composite bridge 38+50+38, b=14.25m, 2x2HL1100R HISTAR460 , slab 0.30m C30/37
Obciazenia zmienne

Nodal Reactions and Residual Forces
Loadcase 912 TM(18:bot.warm)-wTN

Node No	P-X [kN]	P-Y [kN]	P-Z [kN]	M-X [kNm]	M-Y [kNm]	M-Z [kNm]
1126			45.3			
1136			45.3			
1226			41.1			
1236			41.1			
2126			-44.6			
2136			-45.2			
2226			-41.7			
2236			-41.2			
3126			-44.9			
3136			-44.9			
3226			-41.4			
3236			-41.4			
4126			45.2			
4136			45.2			
4226			41.1			
4236			41.1			

Nodal Reactions and Residual Forces
Loadcase 913 wTM(18:bot.warm)+TN

Node No	P-X [kN]	P-Y [kN]	P-Z [kN]	M-X [kNm]	M-Y [kNm]	M-Z [kNm]
1126			27.7			
1136			27.7			
1226			37.1			
1236			37.1			
2126			-29.1			
2136			-27.9			
2226			-35.7			
2236			-36.9			
3126			-28.5			
3136			-28.5			
3226			-36.4			
3236			-36.4			
4126			27.7			
4136			27.7			
4226			37.1			
4236			37.1			

Nodal Reactions and Residual Forces
Loadcase 914 wTM(18:bot.warm)-TN

Node No	P-X [kN]	P-Y [kN]	P-Z [kN]	M-X [kNm]	M-Y [kNm]	M-Z [kNm]
1126			37.5			
1136			37.5			
1226			27.2			
1236			27.2			
2126			-36.0			
2136			-37.2			
2226			-28.8			
2236			-27.5			
3126			-36.7			
3136			-36.7			
3226			-28.1			
3236			-28.1			
4126			37.5			
4136			37.5			
4226			27.3			
4236			27.3			

SOFiSTiK AG - www.sofistik.de

Composite bridge 38+50+38, b=14.25m, 2x2HL1100R HISTAR460 , slab 0.30m C30/37
Obciazenia zmienne

Nodal Reactions and Residual Forces
Loadcase 920 TM:15deg upper warmer

Node No	P-X [kN]	P-Y [kN]	P-Z [kN]	M-X [kNm]	M-Y [kNm]	M-Z [kNm]
1126			-36.3			
1136			-36.3			
1226			-35.7			
1236			-35.7			
2126			36.2			
2136			36.3			
2226			35.8			
2236			35.7			
3126			36.3			
3136			36.3			
3226			35.7			
3236			35.7			
4126			-36.3			
4136			-36.3			
4226			-35.7			
4236			-35.7			

Nodal Reactions and Residual Forces
Loadcase 921 TM(15:up.warm)+wTN

Node No	P-X [kN]	P-Y [kN]	P-Z [kN]	M-X [kNm]	M-Y [kNm]	M-Z [kNm]
1126			-38.1			
1136			-38.1			
1226			-33.9			
1236			-33.9			
2126			37.4			
2136			38.0			
2226			34.5			
2236			34.0			
3126			37.7			
3136			37.7			
3226			34.2			
3236			34.2			
4126			-38.0			
4136			-38.0			
4226			-33.9			
4236			-33.9			

Nodal Reactions and Residual Forces
Loadcase 922 TM(15:up.warm)-wTN

Node No	P-X [kN]	P-Y [kN]	P-Z [kN]	M-X [kNm]	M-Y [kNm]	M-Z [kNm]
1126			-34.6			
1136			-34.6			
1226			-37.4			
1236			-37.4			
2126			35.0			
2136			34.7			
2226			36.9			
2236			37.3			
3126			34.9			
3136			34.9			
3226			37.1			
3236			37.1			
4126			-34.6			
4136			-34.6			
4226			-37.4			
4236			-37.4			

SOFiSTiK AG - www.sofistik.de

Composite bridge 38+50+38, b=14.25m, 2x2HL1100R HISTAR460 , slab 0.30m C30/37
Obciazenia zmienne

Nodal Reactions and Residual Forces
Loadcase 923 wTM(15:up.warm)+TN

Node No	P-X [kN]	P-Y [kN]	P-Z [kN]	M-X [kNm]	M-Y [kNm]	M-Z [kNm]
1126			-32.2			
1136			-32.2			
1226			-21.7			
1236			-21.7			
2126			30.6			
2136			31.9			
2226			23.3			
2236			22.0			
3126			31.4			
3136			31.4			
3226			22.6			
3236			22.6			
4126			-32.2			
4136			-32.2			
4226			-21.8			
4236			-21.8			

Nodal Reactions and Residual Forces
Loadcase 924 wTM(15:up.warm)-TN

Node No	P-X [kN]	P-Y [kN]	P-Z [kN]	M-X [kNm]	M-Y [kNm]	M-Z [kNm]
1126			-22.4			
1136			-22.4			
1226			-31.6			
1236			-31.6			
2126			23.8			
2136			22.7			
2226			30.2			
2236			31.3			
3126			23.1			
3136			23.1			
3226			30.9			
3236			30.9			
4126			-22.4			
4136			-22.4			
4226			-31.6			
4236			-31.6			

Sum of Reactions and Loads

LC	Title	PXX[kN]	PYY[kN]	PZZ[kN]
5	gn	0.0	-3.0	-7565.2
		0.0	0.0	7565.2
6	soil Ka:g	0.0	0.0	0.0
		0.0	0.0	0.0
11	q2.5-lane1-L	0.0	-0.1	-285.0
		0.0	0.0	285.0
12	q2.5-lane2-L	0.0	0.3	-285.0
		0.0	0.0	285.0
14	q2.5-remain-L	0.0	0.6	-247.0
		0.0	0.0	247.0
15	deltaq6.5-lane1-L	0.0	-0.3	-741.0
		0.0	0.0	741.0
16	deltaq6.5-lane2-L	0.0	0.7	-741.0
		0.0	0.0	741.0
18	pedstrian-L	0.0	-1.2	-535.8
		0.0	0.0	535.8
19	pedstrian-R	0.0	0.3	-108.3
		0.0	0.0	108.3
21	q2.5-lane1-L	0.0	-0.2	-375.0
		0.0	0.0	375.0
22	q2.5-lane2-L	0.0	0.3	-375.0
		0.0	0.0	375.0

SOFiSTiK AG - www.sofistik.de

Composite bridge 38+50+38, b=14.25m, 2x2HL1100R HISTAR460 , slab 0.30m C30/37
Obciazenia zmienne

Sum of Reactions and Loads

LC	Title	PXX[kN]	PYY[kN]	PZZ[kN]
24	q2.5-remain-L	0.0	0.7	-325.0
		0.0	0.0	325.0
25	deltaq6.5-lane1-L	0.0	-0.4	-975.0
		0.0	0.0	975.0
26	deltaq6.5-lane2-L	0.0	0.8	-975.0
		0.0	0.0	975.0
28	pedstrian-L	0.0	-1.4	-705.0
		0.0	0.0	705.0
29	pedstrian-R	0.0	0.4	-142.5
		0.0	0.0	142.5
31	q2.5-lane1-L	0.0	-0.1	-285.0
		0.0	0.0	285.0
32	q2.5-lane2-L	0.0	0.3	-285.0
		0.0	0.0	285.0
34	q2.5-remain-L	0.0	0.6	-247.0
		0.0	0.0	247.0
35	deltaq6.5-lane1-L	0.0	-0.3	-741.0
		0.0	0.0	741.0
36	deltaq6.5-lane2-L	0.0	0.7	-741.0
		0.0	0.0	741.0
38	pedstrian-L	0.0	-1.2	-535.8
		0.0	0.0	535.8
39	pedstrian-R	0.0	0.3	-108.3
		0.0	0.0	108.3
110	K-EN-L	0.0	0.0	-100.0
		0.0	0.0	100.0
111	K-EN-L	0.0	-0.1	-200.0
		0.0	0.0	200.0
112	K-EN-L	0.0	-0.1	-200.0
		0.0	0.0	200.0
113	K-EN-L	0.0	-0.1	-200.0
		0.0	0.0	200.0
114	K-EN-L	0.0	-0.1	-200.0
		0.0	0.0	200.0
115	K-EN-L	0.0	-0.1	-200.0
		0.0	0.0	200.0
116	K-EN-L	0.0	-0.1	-200.0
		0.0	0.0	200.0
117	K-EN-L	0.0	-0.1	-200.0
		0.0	0.0	200.0
118	K-EN-L	0.0	-0.1	-200.0
		0.0	0.0	200.0
119	K-EN-L	0.0	-0.1	-200.0
		0.0	0.0	200.0
120	K-EN-L	0.0	-0.1	-200.0
		0.0	0.0	200.0
121	K-EN-L	0.0	-0.1	-200.0
		0.0	0.0	200.0
122	K-EN-L	0.0	-0.1	-200.0
		0.0	0.0	200.0
123	K-EN-L	0.0	-0.1	-200.0
		0.0	0.0	200.0
124	K-EN-L	0.0	-0.1	-200.0
		0.0	0.0	200.0
125	K-EN-L	0.0	-0.1	-200.0
		0.0	0.0	200.0
126	K-EN-L	0.0	-0.1	-200.0
		0.0	0.0	200.0
127	K-EN-L	0.0	-0.1	-200.0
		0.0	0.0	200.0
128	K-EN-L	0.0	-0.1	-200.0
		0.0	0.0	200.0
129	K-EN-L	0.0	-0.1	-200.0
		0.0	0.0	200.0

SOFiSTiK AG - www.sofistik.de

Composite bridge 38+50+38, b=14.25m, 2x2HL1100R HISTAR460 , slab 0.30m C30/37
Obciazenia zmienne

Sum of Reactions and Loads

LC	Title	PXX[kN]	PYY[kN]	PZZ[kN]
130	K-EN-L	0.0	-0.1	-200.0
		0.0	0.0	200.0
131	K-EN-L	0.0	-0.1	-200.0
		0.0	0.0	200.0
132	K-EN-L	0.0	-0.1	-200.0
		0.0	0.0	200.0
133	K-EN-L	0.0	-0.1	-200.0
		0.0	0.0	200.0
134	K-EN-L	0.0	-0.1	-200.0
		0.0	0.0	200.0
135	K-EN-L	0.0	-0.1	-200.0
		0.0	0.0	200.0
136	K-EN-L	0.0	-0.1	-200.0
		0.0	0.0	200.0
137	K-EN-L	0.0	-0.1	-200.0
		0.0	0.0	200.0
138	K-EN-L	0.0	-0.1	-200.0
		0.0	0.0	200.0
139	K-EN-L	0.0	0.0	-100.0
		0.0	0.0	100.0
210	K-EN-L	0.0	0.1	-100.0
		0.0	0.0	100.0
211	K-EN-L	0.0	0.2	-200.0
		0.0	0.0	200.0
212	K-EN-L	0.0	0.2	-200.0
		0.0	0.0	200.0
213	K-EN-L	0.0	0.2	-200.0
		0.0	0.0	200.0
214	K-EN-L	0.0	0.2	-200.0
		0.0	0.0	200.0
215	K-EN-L	0.0	0.2	-200.0
		0.0	0.0	200.0
216	K-EN-L	0.0	0.2	-200.0
		0.0	0.0	200.0
217	K-EN-L	0.0	0.2	-200.0
		0.0	0.0	200.0
218	K-EN-L	0.0	0.2	-200.0
		0.0	0.0	200.0
219	K-EN-L	0.0	0.1	-200.0
		0.0	0.0	200.0
220	K-EN-L	0.0	0.1	-200.0
		0.0	0.0	200.0
221	K-EN-L	0.0	0.2	-200.0
		0.0	0.0	200.0
222	K-EN-L	0.0	0.2	-200.0
		0.0	0.0	200.0
223	K-EN-L	0.0	0.2	-200.0
		0.0	0.0	200.0
224	K-EN-L	0.0	0.2	-200.0
		0.0	0.0	200.0
225	K-EN-L	0.0	0.2	-200.0
		0.0	0.0	200.0
226	K-EN-L	0.0	0.2	-200.0
		0.0	0.0	200.0
227	K-EN-L	0.0	0.2	-200.0
		0.0	0.0	200.0
228	K-EN-L	0.0	0.2	-200.0
		0.0	0.0	200.0
229	K-EN-L	0.0	0.1	-200.0
		0.0	0.0	200.0
230	K-EN-L	0.0	0.1	-200.0
		0.0	0.0	200.0
231	K-EN-L	0.0	0.2	-200.0
		0.0	0.0	200.0

SOFiSTiK AG - www.sofistik.de

Composite bridge 38+50+38, b=14.25m, 2x2HL1100R HISTAR460 , slab 0.30m C30/37
Obciazenia zmienne

Sum of Reactions and Loads

LC	Title	PXX[kN]	PYY[kN]	PZZ[kN]
232	K-EN-L	0.0	0.2	-200.0
		0.0	0.0	200.0
233	K-EN-L	0.0	0.2	-200.0
		0.0	0.0	200.0
234	K-EN-L	0.0	0.2	-200.0
		0.0	0.0	200.0
235	K-EN-L	0.0	0.2	-200.0
		0.0	0.0	200.0
236	K-EN-L	0.0	0.2	-200.0
		0.0	0.0	200.0
237	K-EN-L	0.0	0.2	-200.0
		0.0	0.0	200.0
238	K-EN-L	0.0	0.2	-200.0
		0.0	0.0	200.0
239	K-EN-L	0.0	0.1	-100.0
		0.0	0.0	100.0
410	K-EN-R	0.0	0.2	-100.0
		0.0	0.0	100.0
411	K-EN-R	0.0	0.5	-200.0
		0.0	0.0	200.0
412	K-EN-R	0.0	0.5	-200.0
		0.0	0.0	200.0
413	K-EN-R	0.0	0.5	-200.0
		0.0	0.0	200.0
414	K-EN-R	0.0	0.5	-200.0
		0.0	0.0	200.0
415	K-EN-R	0.0	0.5	-200.0
		0.0	0.0	200.0
416	K-EN-R	0.0	0.4	-200.0
		0.0	0.0	200.0
417	K-EN-R	0.0	0.4	-200.0
		0.0	0.0	200.0
418	K-EN-R	0.0	0.4	-200.0
		0.0	0.0	200.0
419	K-EN-R	0.0	0.4	-200.0
		0.0	0.0	200.0
420	K-EN-R	0.0	0.4	-200.0
		0.0	0.0	200.0
421	K-EN-R	0.0	0.4	-200.0
		0.0	0.0	200.0
422	K-EN-R	0.0	0.4	-200.0
		0.0	0.0	200.0
423	K-EN-R	0.0	0.4	-200.0
		0.0	0.0	200.0
424	K-EN-R	0.0	0.4	-200.0
		0.0	0.0	200.0
425	K-EN-R	0.0	0.4	-200.0
		0.0	0.0	200.0
426	K-EN-R	0.0	0.4	-200.0
		0.0	0.0	200.0
427	K-EN-R	0.0	0.4	-200.0
		0.0	0.0	200.0
428	K-EN-R	0.0	0.4	-200.0
		0.0	0.0	200.0
429	K-EN-R	0.0	0.4	-200.0
		0.0	0.0	200.0
430	K-EN-R	0.0	0.4	-200.0
		0.0	0.0	200.0
431	K-EN-R	0.0	0.4	-200.0
		0.0	0.0	200.0
432	K-EN-R	0.0	0.4	-200.0
		0.0	0.0	200.0
433	K-EN-R	0.0	0.4	-200.0
		0.0	0.0	200.0

SOFiSTiK AG - www.sofistik.de

Composite bridge 38+50+38, b=14.25m, 2x2HL1100R HISTAR460 , slab 0.30m C30/37
Obciazenia zmienne

Sum of Reactions and Loads

LC	Title	PXX[kN]	PYY[kN]	PZZ[kN]
434	K-EN-R	0.0	0.5	-200.0
		0.0	0.0	200.0
435	K-EN-R	0.0	0.5	-200.0
		0.0	0.0	200.0
436	K-EN-R	0.0	0.5	-200.0
		0.0	0.0	200.0
437	K-EN-R	0.0	0.5	-200.0
		0.0	0.0	200.0
438	K-EN-R	0.0	0.5	-200.0
		0.0	0.0	200.0
439	K-EN-R	0.0	0.2	-100.0
		0.0	0.0	100.0
510	K-EN-R	0.0	0.1	-100.0
		0.0	0.0	100.0
511	K-EN-R	0.0	0.2	-200.0
		0.0	0.0	200.0
512	K-EN-R	0.0	0.2	-200.0
		0.0	0.0	200.0
513	K-EN-R	0.0	0.2	-200.0
		0.0	0.0	200.0
514	K-EN-R	0.0	0.2	-200.0
		0.0	0.0	200.0
515	K-EN-R	0.0	0.2	-200.0
		0.0	0.0	200.0
516	K-EN-R	0.0	0.2	-200.0
		0.0	0.0	200.0
517	K-EN-R	0.0	0.1	-200.0
		0.0	0.0	200.0
518	K-EN-R	0.0	0.1	-200.0
		0.0	0.0	200.0
519	K-EN-R	0.0	0.1	-200.0
		0.0	0.0	200.0
520	K-EN-R	0.0	0.1	-200.0
		0.0	0.0	200.0
521	K-EN-R	0.0	0.1	-200.0
		0.0	0.0	200.0
522	K-EN-R	0.0	0.1	-200.0
		0.0	0.0	200.0
523	K-EN-R	0.0	0.2	-200.0
		0.0	0.0	200.0
524	K-EN-R	0.0	0.2	-200.0
		0.0	0.0	200.0
525	K-EN-R	0.0	0.2	-200.0
		0.0	0.0	200.0
526	K-EN-R	0.0	0.2	-200.0
		0.0	0.0	200.0
527	K-EN-R	0.0	0.1	-200.0
		0.0	0.0	200.0
528	K-EN-R	0.0	0.1	-200.0
		0.0	0.0	200.0
529	K-EN-R	0.0	0.1	-200.0
		0.0	0.0	200.0
530	K-EN-R	0.0	0.1	-200.0
		0.0	0.0	200.0
531	K-EN-R	0.0	0.1	-200.0
		0.0	0.0	200.0
532	K-EN-R	0.0	0.1	-200.0
		0.0	0.0	200.0
533	K-EN-R	0.0	0.2	-200.0
		0.0	0.0	200.0
534	K-EN-R	0.0	0.2	-200.0
		0.0	0.0	200.0
535	K-EN-R	0.0	0.2	-200.0
		0.0	0.0	200.0

SOFiSTiK AG - www.sofistik.de

Composite bridge 38+50+38, b=14.25m, 2x2HL1100R HISTAR460 , slab 0.30m C30/37
Obciazenia zmienne

Sum of Reactions and Loads

LC	Title	PXX[kN]	PYY[kN]	PZZ[kN]
536	K-EN-R	0.0	0.2	-200.0
		0.0	0.0	200.0
537	K-EN-R	0.0	0.2	-200.0
		0.0	0.0	200.0
538	K-EN-R	0.0	0.2	-200.0
		0.0	0.0	200.0
539	K-EN-R	0.0	0.1	-100.0
		0.0	0.0	100.0
711	q2.5-lane1-R	0.0	0.6	-285.0
		0.0	0.0	285.0
712	q2.5-lane2-R	0.0	0.2	-285.0
		0.0	0.0	285.0
714	q2.5-remain-R	0.0	-0.1	-247.0
		0.0	0.0	247.0
715	deltaq6.5-lane1-R	0.0	1.7	-741.0
		0.0	0.0	741.0
716	deltaq6.5-lane2-R	0.0	0.6	-741.0
		0.0	0.0	741.0
721	q2.5-lane1-R	0.0	0.8	-375.0
		0.0	0.0	375.0
722	q2.5-lane2-R	0.0	0.3	-375.0
		0.0	0.0	375.0
724	q2.5-remain-R	0.0	-0.2	-325.0
		0.0	0.0	325.0
725	deltaq6.5-lane1-R	0.0	2.0	-975.0
		0.0	0.0	975.0
726	deltaq6.5-lane2-R	0.0	0.7	-975.0
		0.0	0.0	975.0
731	q2.5-lane1-R	0.0	0.6	-285.0
		0.0	0.0	285.0
732	q2.5-lane2-R	0.0	0.2	-285.0
		0.0	0.0	285.0
734	q2.5-remain-R	0.0	-0.1	-247.0
		0.0	0.0	247.0
735	deltaq6.5-lane1-R	0.0	1.7	-741.0
		0.0	0.0	741.0
736	deltaq6.5-lane2-R	0.0	0.6	-741.0
		0.0	0.0	741.0
901	TN:+31	0.0	0.0	0.0
		0.0	0.0	0.0
902	TN:-30	0.0	0.0	0.0
		0.0	0.0	0.0
910	TM:18deg-bottom warmer	0.0	0.0	0.0
		0.0	0.0	0.0
911	TM(18:bot.warm)+wTN	0.0	0.0	0.0
		0.0	0.0	0.0
912	TM(18:bot.warm)-wTN	0.0	0.0	0.0
		0.0	0.0	0.0
913	wTM(18:bot.warm)+TN	0.0	0.0	0.0
		0.0	0.0	0.0
914	wTM(18:bot.warm)-TN	0.0	0.0	0.0
		0.0	0.0	0.0
920	TM:15deg upper warmer	0.0	0.0	0.0
		0.0	0.0	0.0
921	TM(15:up.warm)+wTN	0.0	0.0	0.0
		0.0	0.0	0.0
922	TM(15:up.warm)-wTN	0.0	0.0	0.0
		0.0	0.0	0.0
923	wTM(15:up.warm)+TN	0.0	0.0	0.0
		0.0	0.0	0.0
924	wTM(15:up.warm)-TN	0.0	0.0	0.0
		0.0	0.0	0.0

SOFiSTiK AG - www.sofistik.de

Composite bridge 38+50+38, b=14.25m, 2x2HL1100R HISTAR460 , slab 0.30m C30/37
gk:Structural dead load G_1
part-precombination

Superposition according to EuroNorm 1994 (2004) Composite Structures

Combination rule Number 1
Design Combination
Resulting loadcases type G_1
Loadcase selection

Number	factor	type	Title
5003	1.00	permanent load grouped in actions	supports
5010	1.00	permanent load grouped in actions	Steel structure
5020	1.00	permanent load grouped in actions	scaffoldings+bottom conc
5021	1.00	permanent load grouped in actions	stiffnes of bottom concr
5026	1.00	permanent load grouped in actions	zero step for consistenc
5027	1.00	permanent load grouped in actions	weight of insitu wet con
5030	1.00	permanent load grouped in actions	scaffoldings removed

Generated Loadcases

Number	Comb	Title
2001	1	MAX-MY BEAM Part precomb G_1
2001	1	MAX-P SPRI Part precomb G_1
2001	1	MAX-UZ NODE Part precomb G_1

SOFiSTiK AG - www.sofistik.de

Composite bridge 38+50+38, b=14.25m, 2x2HL1100R HISTAR460 , slab 0.30m C30/37
gn:Superimposed dead loads G_2
part-precombination

Superposition according to EuroNorm 1994 (2004) Composite Structures

Combination rule Number 1
Design Combination
Resulting loadcases type G_2
Loadcase selection

Number	factor	type	Title
5040	1.00	permanent load grouped in actions	superimposed dead loads

Generated Loadcases

Number	Comb	Title
2002	1	MAX-MY BEAM Part precomb G_2
2002	1	MAX-P SPRI Part precomb G_2
2002	1	MAX-UZ NODE Part precomb G_2

SOFiSTiK AG - www.sofistik.de

Composite bridge 38+50+38, b=14.25m, 2x2HL1100R HISTAR460 , slab 0.30m C30/37
g:Total dead loads
precombination

Combination rule Number 1
Design Combination
Resulting loadcases type dead load
Loadcase selection

Number	factor	type	Title
5003	1.00	permanent load grouped in actions	supports
5010	1.00	permanent load grouped in actions	Steel structure
5020	1.00	permanent load grouped in actions	scaffoldings+bottom conc
5021	1.00	permanent load grouped in actions	stiffnes of bottom concr
5026	1.00	permanent load grouped in actions	zero step for consistenc
5027	1.00	permanent load grouped in actions	weight of insitu wet con
5030	1.00	permanent load grouped in actions	scaffoldings removed
5040	1.00	permanent load grouped in actions	superimposed dead loads

Generated Loadcases

Number	Comb	Title
2005	1	MAX-MY BEAM Precombination G
2005	1	MAX-P SPRI Precombination G
2005	1	MAX-UZ NODE Precombination G

SOFiSTiK AG - www.sofistik.de

Composite bridge 38+50+38, b=14.25m, 2x2HL1100R HISTAR460 , slab 0.30m C30/37
C_1:Part1from2 of C+S.
part-precombination

Superposition according to EuroNorm 1994 (2004) Composite Structures

Combination rule Number 1
Design Combination
Resulting loadcases type C_1
Loadcase selection

Number	factor	type	Title
5005	1.00	permanent load grouped in actions	C+S supports 28days
5015	1.00	permanent load grouped in actions	C+S 28days
5025	1.00	permanent load grouped in actions	C+S bottom concrete 28da
5035	1.00	permanent load grouped in actions	C+S til opening 56days

Generated Loadcases

Number	Comb	Title
2021	1	MAX-MY BEAM Part precomb C_1
2021	1	MAX-P SPRI Part precomb C_1
2021	1	MAX-UZ NODE Part precomb C_1

SOFiSTiK AG - www.sofistik.de

Composite bridge 38+50+38, b=14.25m, 2x2HL1100R HISTAR460 , slab 0.30m C30/37
C_2:Part2from2 of C+S.
part-precombination

Superposition according to EuroNorm 1994 (2004) Composite Structures

Combination rule Number 1
Design Combination
Resulting loadcases type C_2
Loadcase selection

Number	factor	type	Title
5045	1.00	permanent load grouped in actions	C+S infinity
5046	1.00	permanent load grouped in actions	C+S infinity
5047	1.00	permanent load grouped in actions	C+S infinity
5048	1.00	permanent load grouped in actions	C+S infinity
5049	1.00	permanent load grouped in actions	C+S infinity

Generated Loadcases

Number	Comb	Title
2022	1	MAX-MY BEAM Part precomb C_2
2022	1	MAX-P SPRI Part precomb C_2
2022	1	MAX-UZ NODE Part precomb C_2

SOFiSTiK AG - www.sofistik.de

Composite bridge 38+50+38, b=14.25m, 2x2HL1100R HISTAR460 , slab 0.30m C30/37
C:Creep and shrink.
precombination

Combination rule Number 1
Design Combination
Resulting loadcases type C+S
Loadcase selection

Number	factor	type	Title
5005	1.00	permanent load grouped in actions	C+S supports 28days
5015	1.00	permanent load grouped in actions	C+S 28days
5025	1.00	permanent load grouped in actions	C+S bottom concrete 28da
5035	1.00	permanent load grouped in actions	C+S til opening 56days
5045	1.00	Conditional LC C+S infinity	
5046	1.00	Conditional LC C+S infinity	
5047	1.00	Conditional LC C+S infinity	
5048	1.00	Conditional LC C+S infinity	
5049	1.00	Conditional LC C+S infinity	

Generated Loadcases

Number	Comb	Title
2026	1	MAX-MY BEAM Precombination C
2027	1	MIN-MY BEAM Precombination C
2028	1	MAX-VZ BEAM Precombination C
2029	1	MIN-VZ BEAM Precombination C
2030	1	MAX-N BEAM Precombination C
2031	1	MIN-N BEAM Precombination C
2032	1	MAX-P SPRI Precombination C
2033	1	MIN-P SPRI Precombination C
2034	1	MAX-UZ NODE Precombination C
2035	1	MIN-UZ NODE Precombination C

SOFiSTiK AG - www.sofistik.de

Composite bridge 38+50+38, b=14.25m, 2x2HL1100R HISTAR460 , slab 0.30m C30/37
F:Settlements
precombination

Superposition according to EuroNorm 1994 (2004) Composite Structures

Combination rule Number 1
Design Combination
Resulting loadcases type F_1
Loadcase selection

Number	factor	type	Title
801	1.00	Conditional LC f10mm P(1)	
802	1.00	Conditional LC f10mm P(2)	
803	1.00	Conditional LC f10mm P(3)	
804	1.00	Conditional LC f10mm P(4)	

Generated Loadcases

Number	Comb	Title
2601	1	MAX-MY BEAM Precombination F
2602	1	MIN-MY BEAM Precombination F
2603	1	MAX-VZ BEAM Precombination F
2604	1	MIN-VZ BEAM Precombination F
2605	1	MAX-N BEAM Precombination F
2606	1	MIN-N BEAM Precombination F
2607	1	MAX-P SPRI Precombination F
2608	1	MIN-P SPRI Precombination F
2609	1	MAX-UZ NODE Precombination F
2610	1	MIN-UZ NODE Precombination F

SOFiSTiK AG - www.sofistik.de

Composite bridge 38+50+38, b=14.25m, 2x2HL1100R HISTAR460 , slab 0.30m C30/37
T:temperature
precombination

Superposition according to EuroNorm 1994 (2004) Composite Structures

Combination rule Number 1
Design Combination
Resulting loadcases type T_1
Loadcase selection

Number	factor	type		Title
901	1.00	Exclusive LC	A 1	TN:+31
902	1.00	Exclusive LC	A 1	TN:-30
910	1.00	Exclusive LC	A 1	TM:18deg-bottom warmer
911	1.00	Exclusive LC	A 1	TM(18:bot.warm)+wTN
912	1.00	Exclusive LC	A 1	TM(18:bot.warm)-wTN
913	1.00	Exclusive LC	A 1	wTM(18:bot.warm)+TN
914	1.00	Exclusive LC	A 1	wTM(18:bot.warm)-TN
920	1.00	Exclusive LC	A 1	TM:15deg upper warmer
921	1.00	Exclusive LC	A 1	TM(15:up.warm)+wTN
922	1.00	Exclusive LC	A 1	TM(15:up.warm)-wTN
923	1.00	Exclusive LC	A 1	wTM(15:up.warm)+TN
924	1.00	Exclusive LC	A 1	wTM(15:up.warm)-TN

Generated Loadcases

Number	Comb	Title
2701	1	MAX-MY BEAM Precombination T
2702	1	MIN-MY BEAM Precombination T
2703	1	MAX-VZ BEAM Precombination T
2704	1	MIN-VZ BEAM Precombination T
2705	1	MAX-N BEAM Precombination T
2706	1	MIN-N BEAM Precombination T
2707	1	MAX-P SPRI Precombination T
2708	1	MIN-P SPRI Precombination T
2709	1	MAX-UZ NODE Precombination T
2710	1	MIN-UZ NODE Precombination T

SOFiSTiK AG - www.sofistik.de

Composite bridge 38+50+38, b=14.25m, 2x2HL1100R HISTAR460 , slab 0.30m C30/37
PN-EN:LM1
prekombinacja

Superposition according to EuroNorm 1994 (2004) Composite Structures

Combination rule Number 1
Design Combination
Resulting loadcases type Q_1
Loadcase selection

Number	factor	type				Title
110	3.00	Exclusive LC	A	1	K-EN-L	
111	3.00	Exclusive LC	A	1	K-EN-L	
112	3.00	Exclusive LC	A	1	K-EN-L	
113	3.00	Exclusive LC	A	1	K-EN-L	
114	3.00	Exclusive LC	A	1	K-EN-L	
115	3.00	Exclusive LC	A	1	K-EN-L	
116	3.00	Exclusive LC	A	1	K-EN-L	
117	3.00	Exclusive LC	A	1	K-EN-L	
118	3.00	Exclusive LC	A	1	K-EN-L	
119	3.00	Exclusive LC	A	1	K-EN-L	
120	3.00	Exclusive LC	A	1	K-EN-L	
121	3.00	Exclusive LC	A	1	K-EN-L	
122	3.00	Exclusive LC	A	1	K-EN-L	
123	3.00	Exclusive LC	A	1	K-EN-L	
124	3.00	Exclusive LC	A	1	K-EN-L	
125	3.00	Exclusive LC	A	1	K-EN-L	
126	3.00	Exclusive LC	A	1	K-EN-L	
127	3.00	Exclusive LC	A	1	K-EN-L	
128	3.00	Exclusive LC	A	1	K-EN-L	
129	3.00	Exclusive LC	A	1	K-EN-L	
130	3.00	Exclusive LC	A	1	K-EN-L	
131	3.00	Exclusive LC	A	1	K-EN-L	
132	3.00	Exclusive LC	A	1	K-EN-L	
133	3.00	Exclusive LC	A	1	K-EN-L	
134	3.00	Exclusive LC	A	1	K-EN-L	
135	3.00	Exclusive LC	A	1	K-EN-L	
136	3.00	Exclusive LC	A	1	K-EN-L	
137	3.00	Exclusive LC	A	1	K-EN-L	
138	3.00	Exclusive LC	A	1	K-EN-L	
139	3.00	Exclusive LC	A	1	K-EN-L	
210	2.00	Exclusive LC	A	2	K-EN-L	
211	2.00	Exclusive LC	A	2	K-EN-L	
212	2.00	Exclusive LC	A	2	K-EN-L	
213	2.00	Exclusive LC	A	2	K-EN-L	
214	2.00	Exclusive LC	A	2	K-EN-L	
215	2.00	Exclusive LC	A	2	K-EN-L	
216	2.00	Exclusive LC	A	2	K-EN-L	
217	2.00	Exclusive LC	A	2	K-EN-L	
218	2.00	Exclusive LC	A	2	K-EN-L	
219	2.00	Exclusive LC	A	2	K-EN-L	
220	2.00	Exclusive LC	A	2	K-EN-L	
221	2.00	Exclusive LC	A	2	K-EN-L	
222	2.00	Exclusive LC	A	2	K-EN-L	
223	2.00	Exclusive LC	A	2	K-EN-L	
224	2.00	Exclusive LC	A	2	K-EN-L	
225	2.00	Exclusive LC	A	2	K-EN-L	
226	2.00	Exclusive LC	A	2	K-EN-L	
227	2.00	Exclusive LC	A	2	K-EN-L	
228	2.00	Exclusive LC	A	2	K-EN-L	
229	2.00	Exclusive LC	A	2	K-EN-L	
230	2.00	Exclusive LC	A	2	K-EN-L	
231	2.00	Exclusive LC	A	2	K-EN-L	
232	2.00	Exclusive LC	A	2	K-EN-L	
233	2.00	Exclusive LC	A	2	K-EN-L	
234	2.00	Exclusive LC	A	2	K-EN-L	
235	2.00	Exclusive LC	A	2	K-EN-L	
236	2.00	Exclusive LC	A	2	K-EN-L	

SOFiSTiK AG - www.sofistik.de

Composite bridge 38+50+38, b=14.25m, 2x2HL1100R HISTAR460 , slab 0.30m C30/37
PN-EN:LM1
prekombinacja

Loadcase selection

Number	factor	type	Title
237	2.00	Exclusive LC A 2	K-EN-L
238	2.00	Exclusive LC A 2	K-EN-L
239	2.00	Exclusive LC A 2	K-EN-L
11	1.00	Conditional LC	q2.5-lane1-L
12	1.00	Conditional LC	q2.5-lane2-L
14	1.00	Conditional LC	q2.5-remain-L
18	1.00	Conditional LC	pedstrian-L
19	1.00	Conditional LC	pedstrian-R
15	1.00	Conditional LC	deltaq6.5-lane1-L
16	0.00	Conditional LC	deltaq6.5-lane2-L
21	1.00	Conditional LC	q2.5-lane1-L
22	1.00	Conditional LC	q2.5-lane2-L
24	1.00	Conditional LC	q2.5-remain-L
28	1.00	Conditional LC	pedstrian-L
29	1.00	Conditional LC	pedstrian-R
25	1.00	Conditional LC	deltaq6.5-lane1-L
26	0.00	Conditional LC	deltaq6.5-lane2-L
31	1.00	Conditional LC	q2.5-lane1-L
32	1.00	Conditional LC	q2.5-lane2-L
34	1.00	Conditional LC	q2.5-remain-L
38	1.00	Conditional LC	pedstrian-L
39	1.00	Conditional LC	pedstrian-R
35	1.00	Conditional LC	deltaq6.5-lane1-L
36	0.00	Conditional LC	deltaq6.5-lane2-L

Generated Loadcases

Number	Comb	Title
2211	1	MAX-MY BEAM PN-EN:K
2212	1	MIN-MY BEAM PN-EN:K
2213	1	MAX-VZ BEAM PN-EN:K
2214	1	MIN-VZ BEAM PN-EN:K
2215	1	MAX-N BEAM PN-EN:K
2216	1	MIN-N BEAM PN-EN:K
2217	1	MAX-P SPRI PN-EN:K
2218	1	MIN-P SPRI PN-EN:K
2219	1	MAX-UZ NODE PN-EN:K
2220	1	MIN-UZ NODE PN-EN:K

SOFiSTiK AG - www.sofistik.de

Composite bridge 38+50+38, b=14.25m, 2x2HL1100R HISTAR460 , slab 0.30m C30/37
PN-EN:LM1
prekombinacja

Superposition according to EuroNorm 1994 (2004) Composite Structures

Combination rule Number 1
Design Combination
Resulting loadcases type Q_1
Loadcase selection

Number	factor	type				Title
110	3.00	Exclusive LC	A	1	K-EN-L	
111	3.00	Exclusive LC	A	1	K-EN-L	
112	3.00	Exclusive LC	A	1	K-EN-L	
113	3.00	Exclusive LC	A	1	K-EN-L	
114	3.00	Exclusive LC	A	1	K-EN-L	
115	3.00	Exclusive LC	A	1	K-EN-L	
116	3.00	Exclusive LC	A	1	K-EN-L	
117	3.00	Exclusive LC	A	1	K-EN-L	
118	3.00	Exclusive LC	A	1	K-EN-L	
119	3.00	Exclusive LC	A	1	K-EN-L	
120	3.00	Exclusive LC	A	1	K-EN-L	
121	3.00	Exclusive LC	A	1	K-EN-L	
122	3.00	Exclusive LC	A	1	K-EN-L	
123	3.00	Exclusive LC	A	1	K-EN-L	
124	3.00	Exclusive LC	A	1	K-EN-L	
125	3.00	Exclusive LC	A	1	K-EN-L	
126	3.00	Exclusive LC	A	1	K-EN-L	
127	3.00	Exclusive LC	A	1	K-EN-L	
128	3.00	Exclusive LC	A	1	K-EN-L	
129	3.00	Exclusive LC	A	1	K-EN-L	
130	3.00	Exclusive LC	A	1	K-EN-L	
131	3.00	Exclusive LC	A	1	K-EN-L	
132	3.00	Exclusive LC	A	1	K-EN-L	
133	3.00	Exclusive LC	A	1	K-EN-L	
134	3.00	Exclusive LC	A	1	K-EN-L	
135	3.00	Exclusive LC	A	1	K-EN-L	
136	3.00	Exclusive LC	A	1	K-EN-L	
137	3.00	Exclusive LC	A	1	K-EN-L	
138	3.00	Exclusive LC	A	1	K-EN-L	
139	3.00	Exclusive LC	A	1	K-EN-L	
210	1.00	Exclusive LC	A	2	K-EN-L	
211	1.00	Exclusive LC	A	2	K-EN-L	
212	1.00	Exclusive LC	A	2	K-EN-L	
213	1.00	Exclusive LC	A	2	K-EN-L	
214	1.00	Exclusive LC	A	2	K-EN-L	
215	1.00	Exclusive LC	A	2	K-EN-L	
216	1.00	Exclusive LC	A	2	K-EN-L	
217	1.00	Exclusive LC	A	2	K-EN-L	
218	1.00	Exclusive LC	A	2	K-EN-L	
219	1.00	Exclusive LC	A	2	K-EN-L	
220	1.00	Exclusive LC	A	2	K-EN-L	
221	1.00	Exclusive LC	A	2	K-EN-L	
222	1.00	Exclusive LC	A	2	K-EN-L	
223	1.00	Exclusive LC	A	2	K-EN-L	
224	1.00	Exclusive LC	A	2	K-EN-L	
225	1.00	Exclusive LC	A	2	K-EN-L	
226	1.00	Exclusive LC	A	2	K-EN-L	
227	1.00	Exclusive LC	A	2	K-EN-L	
228	1.00	Exclusive LC	A	2	K-EN-L	
229	1.00	Exclusive LC	A	2	K-EN-L	
230	1.00	Exclusive LC	A	2	K-EN-L	
231	1.00	Exclusive LC	A	2	K-EN-L	
232	1.00	Exclusive LC	A	2	K-EN-L	
233	1.00	Exclusive LC	A	2	K-EN-L	
234	1.00	Exclusive LC	A	2	K-EN-L	
235	1.00	Exclusive LC	A	2	K-EN-L	
236	1.00	Exclusive LC	A	2	K-EN-L	

SOFiSTiK AG - www.sofistik.de

Composite bridge 38+50+38, b=14.25m, 2x2HL1100R HISTAR460 , slab 0.30m C30/37
PN-EN:LM1
prekombinacja

Loadcase selection

Number	factor	type	Title
237	1.00	Exclusive LC A 2	K-EN-L
238	1.00	Exclusive LC A 2	K-EN-L
239	1.00	Exclusive LC A 2	K-EN-L
11	1.00	Conditional LC	q2.5-lane1-L
12	1.00	Conditional LC	q2.5-lane2-L
14	1.00	Conditional LC	q2.5-remain-L
18	1.00	Conditional LC	pedstrian-L
19	1.00	Conditional LC	pedstrian-R
15	1.00	Conditional LC	deltaq6.5-lane1-L
16	0.00	Conditional LC	deltaq6.5-lane2-L
21	1.00	Conditional LC	q2.5-lane1-L
22	1.00	Conditional LC	q2.5-lane2-L
24	1.00	Conditional LC	q2.5-remain-L
28	1.00	Conditional LC	pedstrian-L
29	1.00	Conditional LC	pedstrian-R
25	1.00	Conditional LC	deltaq6.5-lane1-L
26	0.00	Conditional LC	deltaq6.5-lane2-L
31	1.00	Conditional LC	q2.5-lane1-L
32	1.00	Conditional LC	q2.5-lane2-L
34	1.00	Conditional LC	q2.5-remain-L
38	1.00	Conditional LC	pedstrian-L
39	1.00	Conditional LC	pedstrian-R
35	1.00	Conditional LC	deltaq6.5-lane1-L
36	0.00	Conditional LC	deltaq6.5-lane2-L

Generated Loadcases

Number	Comb	Title
2221	1	MAX-MY BEAM PN-EN:K
2222	1	MIN-MY BEAM PN-EN:K
2223	1	MAX-VZ BEAM PN-EN:K
2224	1	MIN-VZ BEAM PN-EN:K
2225	1	MAX-N BEAM PN-EN:K
2226	1	MIN-N BEAM PN-EN:K
2227	1	MAX-P SPRI PN-EN:K
2228	1	MIN-P SPRI PN-EN:K
2229	1	MAX-UZ NODE PN-EN:K
2230	1	MIN-UZ NODE PN-EN:K

SOFiSTiK AG - www.sofistik.de

Composite bridge 38+50+38, b=14.25m, 2x2HL1100R HISTAR460 , slab 0.30m C30/37
PN-EN:LM1
prekombinacja

Superposition according to EuroNorm 1994 (2004) Composite Structures

Combination rule Number 1
Design Combination
Resulting loadcases type Q_1
Loadcase selection

Number	factor	type				Title
110	2.00	Exclusive LC	A	1	K-EN-L	
111	2.00	Exclusive LC	A	1	K-EN-L	
112	2.00	Exclusive LC	A	1	K-EN-L	
113	2.00	Exclusive LC	A	1	K-EN-L	
114	2.00	Exclusive LC	A	1	K-EN-L	
115	2.00	Exclusive LC	A	1	K-EN-L	
116	2.00	Exclusive LC	A	1	K-EN-L	
117	2.00	Exclusive LC	A	1	K-EN-L	
118	2.00	Exclusive LC	A	1	K-EN-L	
119	2.00	Exclusive LC	A	1	K-EN-L	
120	2.00	Exclusive LC	A	1	K-EN-L	
121	2.00	Exclusive LC	A	1	K-EN-L	
122	2.00	Exclusive LC	A	1	K-EN-L	
123	2.00	Exclusive LC	A	1	K-EN-L	
124	2.00	Exclusive LC	A	1	K-EN-L	
125	2.00	Exclusive LC	A	1	K-EN-L	
126	2.00	Exclusive LC	A	1	K-EN-L	
127	2.00	Exclusive LC	A	1	K-EN-L	
128	2.00	Exclusive LC	A	1	K-EN-L	
129	2.00	Exclusive LC	A	1	K-EN-L	
130	2.00	Exclusive LC	A	1	K-EN-L	
131	2.00	Exclusive LC	A	1	K-EN-L	
132	2.00	Exclusive LC	A	1	K-EN-L	
133	2.00	Exclusive LC	A	1	K-EN-L	
134	2.00	Exclusive LC	A	1	K-EN-L	
135	2.00	Exclusive LC	A	1	K-EN-L	
136	2.00	Exclusive LC	A	1	K-EN-L	
137	2.00	Exclusive LC	A	1	K-EN-L	
138	2.00	Exclusive LC	A	1	K-EN-L	
139	2.00	Exclusive LC	A	1	K-EN-L	
210	3.00	Exclusive LC	A	2	K-EN-L	
211	3.00	Exclusive LC	A	2	K-EN-L	
212	3.00	Exclusive LC	A	2	K-EN-L	
213	3.00	Exclusive LC	A	2	K-EN-L	
214	3.00	Exclusive LC	A	2	K-EN-L	
215	3.00	Exclusive LC	A	2	K-EN-L	
216	3.00	Exclusive LC	A	2	K-EN-L	
217	3.00	Exclusive LC	A	2	K-EN-L	
218	3.00	Exclusive LC	A	2	K-EN-L	
219	3.00	Exclusive LC	A	2	K-EN-L	
220	3.00	Exclusive LC	A	2	K-EN-L	
221	3.00	Exclusive LC	A	2	K-EN-L	
222	3.00	Exclusive LC	A	2	K-EN-L	
223	3.00	Exclusive LC	A	2	K-EN-L	
224	3.00	Exclusive LC	A	2	K-EN-L	
225	3.00	Exclusive LC	A	2	K-EN-L	
226	3.00	Exclusive LC	A	2	K-EN-L	
227	3.00	Exclusive LC	A	2	K-EN-L	
228	3.00	Exclusive LC	A	2	K-EN-L	
229	3.00	Exclusive LC	A	2	K-EN-L	
230	3.00	Exclusive LC	A	2	K-EN-L	
231	3.00	Exclusive LC	A	2	K-EN-L	
232	3.00	Exclusive LC	A	2	K-EN-L	
233	3.00	Exclusive LC	A	2	K-EN-L	
234	3.00	Exclusive LC	A	2	K-EN-L	
235	3.00	Exclusive LC	A	2	K-EN-L	
236	3.00	Exclusive LC	A	2	K-EN-L	

SOFiSTiK AG - www.sofistik.de

Composite bridge 38+50+38, b=14.25m, 2x2HL1100R HISTAR460 , slab 0.30m C30/37
PN-EN:LM1
prekombinacja

Loadcase selection

Number	factor	type	Title
237	3.00	Exclusive LC A 2	K-EN-L
238	3.00	Exclusive LC A 2	K-EN-L
239	3.00	Exclusive LC A 2	K-EN-L
11	1.00	Conditional LC	q2.5-lane1-L
12	1.00	Conditional LC	q2.5-lane2-L
14	1.00	Conditional LC	q2.5-remain-L
18	1.00	Conditional LC	pedstrian-L
19	1.00	Conditional LC	pedstrian-R
15	0.00	Conditional LC	deltaq6.5-lane1-L
16	1.00	Conditional LC	deltaq6.5-lane2-L
21	1.00	Conditional LC	q2.5-lane1-L
22	1.00	Conditional LC	q2.5-lane2-L
24	1.00	Conditional LC	q2.5-remain-L
28	1.00	Conditional LC	pedstrian-L
29	1.00	Conditional LC	pedstrian-R
25	0.00	Conditional LC	deltaq6.5-lane1-L
26	1.00	Conditional LC	deltaq6.5-lane2-L
31	1.00	Conditional LC	q2.5-lane1-L
32	1.00	Conditional LC	q2.5-lane2-L
34	1.00	Conditional LC	q2.5-remain-L
38	1.00	Conditional LC	pedstrian-L
39	1.00	Conditional LC	pedstrian-R
35	0.00	Conditional LC	deltaq6.5-lane1-L
36	1.00	Conditional LC	deltaq6.5-lane2-L

Generated Loadcases

Number	Comb	Title
2231	1	MAX-MY BEAM PN-EN:K
2232	1	MIN-MY BEAM PN-EN:K
2233	1	MAX-VZ BEAM PN-EN:K
2234	1	MIN-VZ BEAM PN-EN:K
2235	1	MAX-N BEAM PN-EN:K
2236	1	MIN-N BEAM PN-EN:K
2237	1	MAX-P SPRI PN-EN:K
2238	1	MIN-P SPRI PN-EN:K
2239	1	MAX-UZ NODE PN-EN:K
2240	1	MIN-UZ NODE PN-EN:K

SOFiSTiK AG - www.sofistik.de

Composite bridge 38+50+38, b=14.25m, 2x2HL1100R HISTAR460 , slab 0.30m C30/37
PN-EN:LM1
prekombinacja

Superposition according to EuroNorm 1994 (2004) Composite Structures

Combination rule Number 1
Design Combination
Resulting loadcases type Q_1
Loadcase selection

Number	factor	type				Title
110	2.00	Exclusive LC	A	1	K-EN-L	
111	2.00	Exclusive LC	A	1	K-EN-L	
112	2.00	Exclusive LC	A	1	K-EN-L	
113	2.00	Exclusive LC	A	1	K-EN-L	
114	2.00	Exclusive LC	A	1	K-EN-L	
115	2.00	Exclusive LC	A	1	K-EN-L	
116	2.00	Exclusive LC	A	1	K-EN-L	
117	2.00	Exclusive LC	A	1	K-EN-L	
118	2.00	Exclusive LC	A	1	K-EN-L	
119	2.00	Exclusive LC	A	1	K-EN-L	
120	2.00	Exclusive LC	A	1	K-EN-L	
121	2.00	Exclusive LC	A	1	K-EN-L	
122	2.00	Exclusive LC	A	1	K-EN-L	
123	2.00	Exclusive LC	A	1	K-EN-L	
124	2.00	Exclusive LC	A	1	K-EN-L	
125	2.00	Exclusive LC	A	1	K-EN-L	
126	2.00	Exclusive LC	A	1	K-EN-L	
127	2.00	Exclusive LC	A	1	K-EN-L	
128	2.00	Exclusive LC	A	1	K-EN-L	
129	2.00	Exclusive LC	A	1	K-EN-L	
130	2.00	Exclusive LC	A	1	K-EN-L	
131	2.00	Exclusive LC	A	1	K-EN-L	
132	2.00	Exclusive LC	A	1	K-EN-L	
133	2.00	Exclusive LC	A	1	K-EN-L	
134	2.00	Exclusive LC	A	1	K-EN-L	
135	2.00	Exclusive LC	A	1	K-EN-L	
136	2.00	Exclusive LC	A	1	K-EN-L	
137	2.00	Exclusive LC	A	1	K-EN-L	
138	2.00	Exclusive LC	A	1	K-EN-L	
139	2.00	Exclusive LC	A	1	K-EN-L	
210	1.00	Exclusive LC	A	2	K-EN-L	
211	1.00	Exclusive LC	A	2	K-EN-L	
212	1.00	Exclusive LC	A	2	K-EN-L	
213	1.00	Exclusive LC	A	2	K-EN-L	
214	1.00	Exclusive LC	A	2	K-EN-L	
215	1.00	Exclusive LC	A	2	K-EN-L	
216	1.00	Exclusive LC	A	2	K-EN-L	
217	1.00	Exclusive LC	A	2	K-EN-L	
218	1.00	Exclusive LC	A	2	K-EN-L	
219	1.00	Exclusive LC	A	2	K-EN-L	
220	1.00	Exclusive LC	A	2	K-EN-L	
221	1.00	Exclusive LC	A	2	K-EN-L	
222	1.00	Exclusive LC	A	2	K-EN-L	
223	1.00	Exclusive LC	A	2	K-EN-L	
224	1.00	Exclusive LC	A	2	K-EN-L	
225	1.00	Exclusive LC	A	2	K-EN-L	
226	1.00	Exclusive LC	A	2	K-EN-L	
227	1.00	Exclusive LC	A	2	K-EN-L	
228	1.00	Exclusive LC	A	2	K-EN-L	
229	1.00	Exclusive LC	A	2	K-EN-L	
230	1.00	Exclusive LC	A	2	K-EN-L	
231	1.00	Exclusive LC	A	2	K-EN-L	
232	1.00	Exclusive LC	A	2	K-EN-L	
233	1.00	Exclusive LC	A	2	K-EN-L	
234	1.00	Exclusive LC	A	2	K-EN-L	
235	1.00	Exclusive LC	A	2	K-EN-L	
236	1.00	Exclusive LC	A	2	K-EN-L	

SOFiSTiK AG - www.sofistik.de

Composite bridge 38+50+38, b=14.25m, 2x2HL1100R HISTAR460 , slab 0.30m C30/37
PN-EN:LM1
prekombinacja

Loadcase selection

Number	factor	type	Title
237	1.00	Exclusive LC A 2	K-EN-L
238	1.00	Exclusive LC A 2	K-EN-L
239	1.00	Exclusive LC A 2	K-EN-L
11	1.00	Conditional LC	q2.5-lane1-L
12	1.00	Conditional LC	q2.5-lane2-L
14	1.00	Conditional LC	q2.5-remain-L
18	1.00	Conditional LC	pedstrian-L
19	1.00	Conditional LC	pedstrian-R
15	0.00	Conditional LC	deltaq6.5-lane1-L
16	0.00	Conditional LC	deltaq6.5-lane2-L
21	1.00	Conditional LC	q2.5-lane1-L
22	1.00	Conditional LC	q2.5-lane2-L
24	1.00	Conditional LC	q2.5-remain-L
28	1.00	Conditional LC	pedstrian-L
29	1.00	Conditional LC	pedstrian-R
25	0.00	Conditional LC	deltaq6.5-lane1-L
26	0.00	Conditional LC	deltaq6.5-lane2-L
31	1.00	Conditional LC	q2.5-lane1-L
32	1.00	Conditional LC	q2.5-lane2-L
34	1.00	Conditional LC	q2.5-remain-L
38	1.00	Conditional LC	pedstrian-L
39	1.00	Conditional LC	pedstrian-R
35	0.00	Conditional LC	deltaq6.5-lane1-L
36	0.00	Conditional LC	deltaq6.5-lane2-L

Generated Loadcases

Number	Comb	Title
2241	1	MAX-MY BEAM PN-EN:K
2242	1	MIN-MY BEAM PN-EN:K
2243	1	MAX-VZ BEAM PN-EN:K
2244	1	MIN-VZ BEAM PN-EN:K
2245	1	MAX-N BEAM PN-EN:K
2246	1	MIN-N BEAM PN-EN:K
2247	1	MAX-P SPRI PN-EN:K
2248	1	MIN-P SPRI PN-EN:K
2249	1	MAX-UZ NODE PN-EN:K
2250	1	MIN-UZ NODE PN-EN:K

SOFiSTiK AG - www.sofistik.de

Composite bridge 38+50+38, b=14.25m, 2x2HL1100R HISTAR460 , slab 0.30m C30/37
PN-EN:LM1
prekombinacja

Superposition according to EuroNorm 1994 (2004) Composite Structures

Combination rule Number 1
Design Combination
Resulting loadcases type Q_1
Loadcase selection

Number	factor	type				Title
110	1.00	Exclusive LC	A	1	K-EN-L	
111	1.00	Exclusive LC	A	1	K-EN-L	
112	1.00	Exclusive LC	A	1	K-EN-L	
113	1.00	Exclusive LC	A	1	K-EN-L	
114	1.00	Exclusive LC	A	1	K-EN-L	
115	1.00	Exclusive LC	A	1	K-EN-L	
116	1.00	Exclusive LC	A	1	K-EN-L	
117	1.00	Exclusive LC	A	1	K-EN-L	
118	1.00	Exclusive LC	A	1	K-EN-L	
119	1.00	Exclusive LC	A	1	K-EN-L	
120	1.00	Exclusive LC	A	1	K-EN-L	
121	1.00	Exclusive LC	A	1	K-EN-L	
122	1.00	Exclusive LC	A	1	K-EN-L	
123	1.00	Exclusive LC	A	1	K-EN-L	
124	1.00	Exclusive LC	A	1	K-EN-L	
125	1.00	Exclusive LC	A	1	K-EN-L	
126	1.00	Exclusive LC	A	1	K-EN-L	
127	1.00	Exclusive LC	A	1	K-EN-L	
128	1.00	Exclusive LC	A	1	K-EN-L	
129	1.00	Exclusive LC	A	1	K-EN-L	
130	1.00	Exclusive LC	A	1	K-EN-L	
131	1.00	Exclusive LC	A	1	K-EN-L	
132	1.00	Exclusive LC	A	1	K-EN-L	
133	1.00	Exclusive LC	A	1	K-EN-L	
134	1.00	Exclusive LC	A	1	K-EN-L	
135	1.00	Exclusive LC	A	1	K-EN-L	
136	1.00	Exclusive LC	A	1	K-EN-L	
137	1.00	Exclusive LC	A	1	K-EN-L	
138	1.00	Exclusive LC	A	1	K-EN-L	
139	1.00	Exclusive LC	A	1	K-EN-L	
210	2.00	Exclusive LC	A	2	K-EN-L	
211	2.00	Exclusive LC	A	2	K-EN-L	
212	2.00	Exclusive LC	A	2	K-EN-L	
213	2.00	Exclusive LC	A	2	K-EN-L	
214	2.00	Exclusive LC	A	2	K-EN-L	
215	2.00	Exclusive LC	A	2	K-EN-L	
216	2.00	Exclusive LC	A	2	K-EN-L	
217	2.00	Exclusive LC	A	2	K-EN-L	
218	2.00	Exclusive LC	A	2	K-EN-L	
219	2.00	Exclusive LC	A	2	K-EN-L	
220	2.00	Exclusive LC	A	2	K-EN-L	
221	2.00	Exclusive LC	A	2	K-EN-L	
222	2.00	Exclusive LC	A	2	K-EN-L	
223	2.00	Exclusive LC	A	2	K-EN-L	
224	2.00	Exclusive LC	A	2	K-EN-L	
225	2.00	Exclusive LC	A	2	K-EN-L	
226	2.00	Exclusive LC	A	2	K-EN-L	
227	2.00	Exclusive LC	A	2	K-EN-L	
228	2.00	Exclusive LC	A	2	K-EN-L	
229	2.00	Exclusive LC	A	2	K-EN-L	
230	2.00	Exclusive LC	A	2	K-EN-L	
231	2.00	Exclusive LC	A	2	K-EN-L	
232	2.00	Exclusive LC	A	2	K-EN-L	
233	2.00	Exclusive LC	A	2	K-EN-L	
234	2.00	Exclusive LC	A	2	K-EN-L	
235	2.00	Exclusive LC	A	2	K-EN-L	
236	2.00	Exclusive LC	A	2	K-EN-L	

SOFiSTiK AG - www.sofistik.de

Composite bridge 38+50+38, b=14.25m, 2x2HL1100R HISTAR460 , slab 0.30m C30/37
PN-EN:LM1
prekombinacja

Loadcase selection

Number	factor	type	Title
237	2.00	Exclusive LC A 2	K-EN-L
238	2.00	Exclusive LC A 2	K-EN-L
239	2.00	Exclusive LC A 2	K-EN-L
11	1.00	Conditional LC	q2.5-lane1-L
12	1.00	Conditional LC	q2.5-lane2-L
14	1.00	Conditional LC	q2.5-remain-L
18	1.00	Conditional LC	pedstrian-L
19	1.00	Conditional LC	pedstrian-R
15	0.00	Conditional LC	deltaq6.5-lane1-L
16	0.00	Conditional LC	deltaq6.5-lane2-L
21	1.00	Conditional LC	q2.5-lane1-L
22	1.00	Conditional LC	q2.5-lane2-L
24	1.00	Conditional LC	q2.5-remain-L
28	1.00	Conditional LC	pedstrian-L
29	1.00	Conditional LC	pedstrian-R
25	0.00	Conditional LC	deltaq6.5-lane1-L
26	0.00	Conditional LC	deltaq6.5-lane2-L
31	1.00	Conditional LC	q2.5-lane1-L
32	1.00	Conditional LC	q2.5-lane2-L
34	1.00	Conditional LC	q2.5-remain-L
38	1.00	Conditional LC	pedstrian-L
39	1.00	Conditional LC	pedstrian-R
35	0.00	Conditional LC	deltaq6.5-lane1-L
36	0.00	Conditional LC	deltaq6.5-lane2-L

Generated Loadcases

Number	Comb	Title
2251	1	MAX-MY BEAM PN-EN:K
2252	1	MIN-MY BEAM PN-EN:K
2253	1	MAX-VZ BEAM PN-EN:K
2254	1	MIN-VZ BEAM PN-EN:K
2255	1	MAX-N BEAM PN-EN:K
2256	1	MIN-N BEAM PN-EN:K
2257	1	MAX-P SPRI PN-EN:K
2258	1	MIN-P SPRI PN-EN:K
2259	1	MAX-UZ NODE PN-EN:K
2260	1	MIN-UZ NODE PN-EN:K

SOFiSTiK AG - www.sofistik.de

Composite bridge 38+50+38, b=14.25m, 2x2HL1100R HISTAR460 , slab 0.30m C30/37
PN-EN:LM1
prekombinacja

Superposition according to EuroNorm 1994 (2004) Composite Structures

Combination rule Number 1
Design Combination
Resulting loadcases type Q_1
Loadcase selection

Number	factor	type				Title
110	1.00	Exclusive LC	A	1	K-EN-L	
111	1.00	Exclusive LC	A	1	K-EN-L	
112	1.00	Exclusive LC	A	1	K-EN-L	
113	1.00	Exclusive LC	A	1	K-EN-L	
114	1.00	Exclusive LC	A	1	K-EN-L	
115	1.00	Exclusive LC	A	1	K-EN-L	
116	1.00	Exclusive LC	A	1	K-EN-L	
117	1.00	Exclusive LC	A	1	K-EN-L	
118	1.00	Exclusive LC	A	1	K-EN-L	
119	1.00	Exclusive LC	A	1	K-EN-L	
120	1.00	Exclusive LC	A	1	K-EN-L	
121	1.00	Exclusive LC	A	1	K-EN-L	
122	1.00	Exclusive LC	A	1	K-EN-L	
123	1.00	Exclusive LC	A	1	K-EN-L	
124	1.00	Exclusive LC	A	1	K-EN-L	
125	1.00	Exclusive LC	A	1	K-EN-L	
126	1.00	Exclusive LC	A	1	K-EN-L	
127	1.00	Exclusive LC	A	1	K-EN-L	
128	1.00	Exclusive LC	A	1	K-EN-L	
129	1.00	Exclusive LC	A	1	K-EN-L	
130	1.00	Exclusive LC	A	1	K-EN-L	
131	1.00	Exclusive LC	A	1	K-EN-L	
132	1.00	Exclusive LC	A	1	K-EN-L	
133	1.00	Exclusive LC	A	1	K-EN-L	
134	1.00	Exclusive LC	A	1	K-EN-L	
135	1.00	Exclusive LC	A	1	K-EN-L	
136	1.00	Exclusive LC	A	1	K-EN-L	
137	1.00	Exclusive LC	A	1	K-EN-L	
138	1.00	Exclusive LC	A	1	K-EN-L	
139	1.00	Exclusive LC	A	1	K-EN-L	
210	3.00	Exclusive LC	A	2	K-EN-L	
211	3.00	Exclusive LC	A	2	K-EN-L	
212	3.00	Exclusive LC	A	2	K-EN-L	
213	3.00	Exclusive LC	A	2	K-EN-L	
214	3.00	Exclusive LC	A	2	K-EN-L	
215	3.00	Exclusive LC	A	2	K-EN-L	
216	3.00	Exclusive LC	A	2	K-EN-L	
217	3.00	Exclusive LC	A	2	K-EN-L	
218	3.00	Exclusive LC	A	2	K-EN-L	
219	3.00	Exclusive LC	A	2	K-EN-L	
220	3.00	Exclusive LC	A	2	K-EN-L	
221	3.00	Exclusive LC	A	2	K-EN-L	
222	3.00	Exclusive LC	A	2	K-EN-L	
223	3.00	Exclusive LC	A	2	K-EN-L	
224	3.00	Exclusive LC	A	2	K-EN-L	
225	3.00	Exclusive LC	A	2	K-EN-L	
226	3.00	Exclusive LC	A	2	K-EN-L	
227	3.00	Exclusive LC	A	2	K-EN-L	
228	3.00	Exclusive LC	A	2	K-EN-L	
229	3.00	Exclusive LC	A	2	K-EN-L	
230	3.00	Exclusive LC	A	2	K-EN-L	
231	3.00	Exclusive LC	A	2	K-EN-L	
232	3.00	Exclusive LC	A	2	K-EN-L	
233	3.00	Exclusive LC	A	2	K-EN-L	
234	3.00	Exclusive LC	A	2	K-EN-L	
235	3.00	Exclusive LC	A	2	K-EN-L	
236	3.00	Exclusive LC	A	2	K-EN-L	

SOFiSTiK AG - www.sofistik.de

Composite bridge 38+50+38, b=14.25m, 2x2HL1100R HISTAR460 , slab 0.30m C30/37
PN-EN:LM1
prekombinacja

Loadcase selection

Number	factor	type	Title
237	3.00	Exclusive LC A 2	K-EN-L
238	3.00	Exclusive LC A 2	K-EN-L
239	3.00	Exclusive LC A 2	K-EN-L
11	1.00	Conditional LC	q2.5-lane1-L
12	1.00	Conditional LC	q2.5-lane2-L
14	1.00	Conditional LC	q2.5-remain-L
18	1.00	Conditional LC	pedstrian-L
19	1.00	Conditional LC	pedstrian-R
15	0.00	Conditional LC	deltaq6.5-lane1-L
16	1.00	Conditional LC	deltaq6.5-lane2-L
21	1.00	Conditional LC	q2.5-lane1-L
22	1.00	Conditional LC	q2.5-lane2-L
24	1.00	Conditional LC	q2.5-remain-L
28	1.00	Conditional LC	pedstrian-L
29	1.00	Conditional LC	pedstrian-R
25	0.00	Conditional LC	deltaq6.5-lane1-L
26	1.00	Conditional LC	deltaq6.5-lane2-L
31	1.00	Conditional LC	q2.5-lane1-L
32	1.00	Conditional LC	q2.5-lane2-L
34	1.00	Conditional LC	q2.5-remain-L
38	1.00	Conditional LC	pedstrian-L
39	1.00	Conditional LC	pedstrian-R
35	0.00	Conditional LC	deltaq6.5-lane1-L
36	1.00	Conditional LC	deltaq6.5-lane2-L

Generated Loadcases

Number	Comb	Title
2261	1	MAX-MY BEAM PN-EN:K
2262	1	MIN-MY BEAM PN-EN:K
2263	1	MAX-VZ BEAM PN-EN:K
2264	1	MIN-VZ BEAM PN-EN:K
2265	1	MAX-N BEAM PN-EN:K
2266	1	MIN-N BEAM PN-EN:K
2267	1	MAX-P SPRI PN-EN:K
2268	1	MIN-P SPRI PN-EN:K
2269	1	MAX-UZ NODE PN-EN:K
2270	1	MIN-UZ NODE PN-EN:K

SOFiSTiK AG - www.sofistik.de

Composite bridge 38+50+38, b=14.25m, 2x2HL1100R HISTAR460 , slab 0.30m C30/37
PN-EN:LM1
prekombinacja

Superposition according to EuroNorm 1994 (2004) Composite Structures

Combination rule Number 1
Design Combination
Resulting loadcases type Q_1
Loadcase selection

Number	factor	type				Title
410	3.00	Exclusive LC	A	1	K-EN-R	
411	3.00	Exclusive LC	A	1	K-EN-R	
412	3.00	Exclusive LC	A	1	K-EN-R	
413	3.00	Exclusive LC	A	1	K-EN-R	
414	3.00	Exclusive LC	A	1	K-EN-R	
415	3.00	Exclusive LC	A	1	K-EN-R	
416	3.00	Exclusive LC	A	1	K-EN-R	
417	3.00	Exclusive LC	A	1	K-EN-R	
418	3.00	Exclusive LC	A	1	K-EN-R	
419	3.00	Exclusive LC	A	1	K-EN-R	
420	3.00	Exclusive LC	A	1	K-EN-R	
421	3.00	Exclusive LC	A	1	K-EN-R	
422	3.00	Exclusive LC	A	1	K-EN-R	
423	3.00	Exclusive LC	A	1	K-EN-R	
424	3.00	Exclusive LC	A	1	K-EN-R	
425	3.00	Exclusive LC	A	1	K-EN-R	
426	3.00	Exclusive LC	A	1	K-EN-R	
427	3.00	Exclusive LC	A	1	K-EN-R	
428	3.00	Exclusive LC	A	1	K-EN-R	
429	3.00	Exclusive LC	A	1	K-EN-R	
430	3.00	Exclusive LC	A	1	K-EN-R	
431	3.00	Exclusive LC	A	1	K-EN-R	
432	3.00	Exclusive LC	A	1	K-EN-R	
433	3.00	Exclusive LC	A	1	K-EN-R	
434	3.00	Exclusive LC	A	1	K-EN-R	
435	3.00	Exclusive LC	A	1	K-EN-R	
436	3.00	Exclusive LC	A	1	K-EN-R	
437	3.00	Exclusive LC	A	1	K-EN-R	
438	3.00	Exclusive LC	A	1	K-EN-R	
439	3.00	Exclusive LC	A	1	K-EN-R	
510	2.00	Exclusive LC	A	2	K-EN-R	
511	2.00	Exclusive LC	A	2	K-EN-R	
512	2.00	Exclusive LC	A	2	K-EN-R	
513	2.00	Exclusive LC	A	2	K-EN-R	
514	2.00	Exclusive LC	A	2	K-EN-R	
515	2.00	Exclusive LC	A	2	K-EN-R	
516	2.00	Exclusive LC	A	2	K-EN-R	
517	2.00	Exclusive LC	A	2	K-EN-R	
518	2.00	Exclusive LC	A	2	K-EN-R	
519	2.00	Exclusive LC	A	2	K-EN-R	
520	2.00	Exclusive LC	A	2	K-EN-R	
521	2.00	Exclusive LC	A	2	K-EN-R	
522	2.00	Exclusive LC	A	2	K-EN-R	
523	2.00	Exclusive LC	A	2	K-EN-R	
524	2.00	Exclusive LC	A	2	K-EN-R	
525	2.00	Exclusive LC	A	2	K-EN-R	
526	2.00	Exclusive LC	A	2	K-EN-R	
527	2.00	Exclusive LC	A	2	K-EN-R	
528	2.00	Exclusive LC	A	2	K-EN-R	
529	2.00	Exclusive LC	A	2	K-EN-R	
530	2.00	Exclusive LC	A	2	K-EN-R	
531	2.00	Exclusive LC	A	2	K-EN-R	
532	2.00	Exclusive LC	A	2	K-EN-R	
533	2.00	Exclusive LC	A	2	K-EN-R	
534	2.00	Exclusive LC	A	2	K-EN-R	
535	2.00	Exclusive LC	A	2	K-EN-R	
536	2.00	Exclusive LC	A	2	K-EN-R	

SOFiSTiK AG - www.sofistik.de

Composite bridge 38+50+38, b=14.25m, 2x2HL1100R HISTAR460 , slab 0.30m C30/37
PN-EN:LM1
prekombinacja

Loadcase selection

Number	factor	type	Title
537	2.00	Exclusive LC A 2	K-EN-R
538	2.00	Exclusive LC A 2	K-EN-R
539	2.00	Exclusive LC A 2	K-EN-R
711	1.00	Conditional LC	q2.5-lane1-R
712	1.00	Conditional LC	q2.5-lane2-R
714	1.00	Conditional LC	q2.5-remain-R
18	1.00	Conditional LC	pedstrian-L
19	1.00	Conditional LC	pedstrian-R
715	1.00	Conditional LC	deltaq6.5-lane1-R
716	0.00	Conditional LC	deltaq6.5-lane2-R
721	1.00	Conditional LC	q2.5-lane1-R
722	1.00	Conditional LC	q2.5-lane2-R
724	1.00	Conditional LC	q2.5-remain-R
28	1.00	Conditional LC	pedstrian-L
29	1.00	Conditional LC	pedstrian-R
725	1.00	Conditional LC	deltaq6.5-lane1-R
726	0.00	Conditional LC	deltaq6.5-lane2-R
731	1.00	Conditional LC	q2.5-lane1-R
732	1.00	Conditional LC	q2.5-lane2-R
734	1.00	Conditional LC	q2.5-remain-R
38	1.00	Conditional LC	pedstrian-L
39	1.00	Conditional LC	pedstrian-R
735	1.00	Conditional LC	deltaq6.5-lane1-R
736	0.00	Conditional LC	deltaq6.5-lane2-R

Generated Loadcases

Number	Comb	Title
2311	1	MAX-MY BEAM PN-EN:K
2312	1	MIN-MY BEAM PN-EN:K
2313	1	MAX-VZ BEAM PN-EN:K
2314	1	MIN-VZ BEAM PN-EN:K
2315	1	MAX-N BEAM PN-EN:K
2316	1	MIN-N BEAM PN-EN:K
2317	1	MAX-P SPRI PN-EN:K
2318	1	MIN-P SPRI PN-EN:K
2319	1	MAX-UZ NODE PN-EN:K
2320	1	MIN-UZ NODE PN-EN:K

SOFiSTiK AG - www.sofistik.de

Composite bridge 38+50+38, b=14.25m, 2x2HL1100R HISTAR460 , slab 0.30m C30/37
PN-EN:LM1
prekombinacja

Superposition according to EuroNorm 1994 (2004) Composite Structures

Combination rule Number 1
Design Combination
Resulting loadcases type Q_1
Loadcase selection

Number	factor	type				Title
410	3.00	Exclusive LC	A	1	K-EN-R	
411	3.00	Exclusive LC	A	1	K-EN-R	
412	3.00	Exclusive LC	A	1	K-EN-R	
413	3.00	Exclusive LC	A	1	K-EN-R	
414	3.00	Exclusive LC	A	1	K-EN-R	
415	3.00	Exclusive LC	A	1	K-EN-R	
416	3.00	Exclusive LC	A	1	K-EN-R	
417	3.00	Exclusive LC	A	1	K-EN-R	
418	3.00	Exclusive LC	A	1	K-EN-R	
419	3.00	Exclusive LC	A	1	K-EN-R	
420	3.00	Exclusive LC	A	1	K-EN-R	
421	3.00	Exclusive LC	A	1	K-EN-R	
422	3.00	Exclusive LC	A	1	K-EN-R	
423	3.00	Exclusive LC	A	1	K-EN-R	
424	3.00	Exclusive LC	A	1	K-EN-R	
425	3.00	Exclusive LC	A	1	K-EN-R	
426	3.00	Exclusive LC	A	1	K-EN-R	
427	3.00	Exclusive LC	A	1	K-EN-R	
428	3.00	Exclusive LC	A	1	K-EN-R	
429	3.00	Exclusive LC	A	1	K-EN-R	
430	3.00	Exclusive LC	A	1	K-EN-R	
431	3.00	Exclusive LC	A	1	K-EN-R	
432	3.00	Exclusive LC	A	1	K-EN-R	
433	3.00	Exclusive LC	A	1	K-EN-R	
434	3.00	Exclusive LC	A	1	K-EN-R	
435	3.00	Exclusive LC	A	1	K-EN-R	
436	3.00	Exclusive LC	A	1	K-EN-R	
437	3.00	Exclusive LC	A	1	K-EN-R	
438	3.00	Exclusive LC	A	1	K-EN-R	
439	3.00	Exclusive LC	A	1	K-EN-R	
510	1.00	Exclusive LC	A	2	K-EN-R	
511	1.00	Exclusive LC	A	2	K-EN-R	
512	1.00	Exclusive LC	A	2	K-EN-R	
513	1.00	Exclusive LC	A	2	K-EN-R	
514	1.00	Exclusive LC	A	2	K-EN-R	
515	1.00	Exclusive LC	A	2	K-EN-R	
516	1.00	Exclusive LC	A	2	K-EN-R	
517	1.00	Exclusive LC	A	2	K-EN-R	
518	1.00	Exclusive LC	A	2	K-EN-R	
519	1.00	Exclusive LC	A	2	K-EN-R	
520	1.00	Exclusive LC	A	2	K-EN-R	
521	1.00	Exclusive LC	A	2	K-EN-R	
522	1.00	Exclusive LC	A	2	K-EN-R	
523	1.00	Exclusive LC	A	2	K-EN-R	
524	1.00	Exclusive LC	A	2	K-EN-R	
525	1.00	Exclusive LC	A	2	K-EN-R	
526	1.00	Exclusive LC	A	2	K-EN-R	
527	1.00	Exclusive LC	A	2	K-EN-R	
528	1.00	Exclusive LC	A	2	K-EN-R	
529	1.00	Exclusive LC	A	2	K-EN-R	
530	1.00	Exclusive LC	A	2	K-EN-R	
531	1.00	Exclusive LC	A	2	K-EN-R	
532	1.00	Exclusive LC	A	2	K-EN-R	
533	1.00	Exclusive LC	A	2	K-EN-R	
534	1.00	Exclusive LC	A	2	K-EN-R	
535	1.00	Exclusive LC	A	2	K-EN-R	
536	1.00	Exclusive LC	A	2	K-EN-R	

SOFiSTiK AG - www.sofistik.de

Composite bridge 38+50+38, b=14.25m, 2x2HL1100R HISTAR460 , slab 0.30m C30/37
PN-EN:LM1
prekombinacja

Loadcase selection

Number	factor	type	Title
537	1.00	Exclusive LC A 2	K-EN-R
538	1.00	Exclusive LC A 2	K-EN-R
539	1.00	Exclusive LC A 2	K-EN-R
711	1.00	Conditional LC	q2.5-lane1-R
712	1.00	Conditional LC	q2.5-lane2-R
714	1.00	Conditional LC	q2.5-remain-R
18	1.00	Conditional LC	pedstrian-L
19	1.00	Conditional LC	pedstrian-R
715	1.00	Conditional LC	deltaq6.5-lane1-R
716	0.00	Conditional LC	deltaq6.5-lane2-R
721	1.00	Conditional LC	q2.5-lane1-R
722	1.00	Conditional LC	q2.5-lane2-R
724	1.00	Conditional LC	q2.5-remain-R
28	1.00	Conditional LC	pedstrian-L
29	1.00	Conditional LC	pedstrian-R
725	1.00	Conditional LC	deltaq6.5-lane1-R
726	0.00	Conditional LC	deltaq6.5-lane2-R
731	1.00	Conditional LC	q2.5-lane1-R
732	1.00	Conditional LC	q2.5-lane2-R
734	1.00	Conditional LC	q2.5-remain-R
38	1.00	Conditional LC	pedstrian-L
39	1.00	Conditional LC	pedstrian-R
735	1.00	Conditional LC	deltaq6.5-lane1-R
736	0.00	Conditional LC	deltaq6.5-lane2-R

Generated Loadcases

Number	Comb	Title
2321	1	MAX-MY BEAM PN-EN:K
2322	1	MIN-MY BEAM PN-EN:K
2323	1	MAX-VZ BEAM PN-EN:K
2324	1	MIN-VZ BEAM PN-EN:K
2325	1	MAX-N BEAM PN-EN:K
2326	1	MIN-N BEAM PN-EN:K
2327	1	MAX-P SPRI PN-EN:K
2328	1	MIN-P SPRI PN-EN:K
2329	1	MAX-UZ NODE PN-EN:K
2330	1	MIN-UZ NODE PN-EN:K

SOFiSTiK AG - www.sofistik.de

Composite bridge 38+50+38, b=14.25m, 2x2HL1100R HISTAR460 , slab 0.30m C30/37
PN-EN:LM1
prekombinacja

Superposition according to EuroNorm 1994 (2004) Composite Structures

Combination rule Number 1
Design Combination
Resulting loadcases type Q_1
Loadcase selection

Number	factor	type	Title
410	2.00	Exclusive LC A 1 K-EN-R	
411	2.00	Exclusive LC A 1 K-EN-R	
412	2.00	Exclusive LC A 1 K-EN-R	
413	2.00	Exclusive LC A 1 K-EN-R	
414	2.00	Exclusive LC A 1 K-EN-R	
415	2.00	Exclusive LC A 1 K-EN-R	
416	2.00	Exclusive LC A 1 K-EN-R	
417	2.00	Exclusive LC A 1 K-EN-R	
418	2.00	Exclusive LC A 1 K-EN-R	
419	2.00	Exclusive LC A 1 K-EN-R	
420	2.00	Exclusive LC A 1 K-EN-R	
421	2.00	Exclusive LC A 1 K-EN-R	
422	2.00	Exclusive LC A 1 K-EN-R	
423	2.00	Exclusive LC A 1 K-EN-R	
424	2.00	Exclusive LC A 1 K-EN-R	
425	2.00	Exclusive LC A 1 K-EN-R	
426	2.00	Exclusive LC A 1 K-EN-R	
427	2.00	Exclusive LC A 1 K-EN-R	
428	2.00	Exclusive LC A 1 K-EN-R	
429	2.00	Exclusive LC A 1 K-EN-R	
430	2.00	Exclusive LC A 1 K-EN-R	
431	2.00	Exclusive LC A 1 K-EN-R	
432	2.00	Exclusive LC A 1 K-EN-R	
433	2.00	Exclusive LC A 1 K-EN-R	
434	2.00	Exclusive LC A 1 K-EN-R	
435	2.00	Exclusive LC A 1 K-EN-R	
436	2.00	Exclusive LC A 1 K-EN-R	
437	2.00	Exclusive LC A 1 K-EN-R	
438	2.00	Exclusive LC A 1 K-EN-R	
439	2.00	Exclusive LC A 1 K-EN-R	
510	3.00	Exclusive LC A 2 K-EN-R	
511	3.00	Exclusive LC A 2 K-EN-R	
512	3.00	Exclusive LC A 2 K-EN-R	
513	3.00	Exclusive LC A 2 K-EN-R	
514	3.00	Exclusive LC A 2 K-EN-R	
515	3.00	Exclusive LC A 2 K-EN-R	
516	3.00	Exclusive LC A 2 K-EN-R	
517	3.00	Exclusive LC A 2 K-EN-R	
518	3.00	Exclusive LC A 2 K-EN-R	
519	3.00	Exclusive LC A 2 K-EN-R	
520	3.00	Exclusive LC A 2 K-EN-R	
521	3.00	Exclusive LC A 2 K-EN-R	
522	3.00	Exclusive LC A 2 K-EN-R	
523	3.00	Exclusive LC A 2 K-EN-R	
524	3.00	Exclusive LC A 2 K-EN-R	
525	3.00	Exclusive LC A 2 K-EN-R	
526	3.00	Exclusive LC A 2 K-EN-R	
527	3.00	Exclusive LC A 2 K-EN-R	
528	3.00	Exclusive LC A 2 K-EN-R	
529	3.00	Exclusive LC A 2 K-EN-R	
530	3.00	Exclusive LC A 2 K-EN-R	
531	3.00	Exclusive LC A 2 K-EN-R	
532	3.00	Exclusive LC A 2 K-EN-R	
533	3.00	Exclusive LC A 2 K-EN-R	
534	3.00	Exclusive LC A 2 K-EN-R	
535	3.00	Exclusive LC A 2 K-EN-R	
536	3.00	Exclusive LC A 2 K-EN-R	

SOFiSTiK AG - www.sofistik.de

Composite bridge 38+50+38, b=14.25m, 2x2HL1100R HISTAR460 , slab 0.30m C30/37
PN-EN:LM1
prekombinacja

Loadcase selection

Number	factor	type	Title
537	3.00	Exclusive LC A 2	K-EN-R
538	3.00	Exclusive LC A 2	K-EN-R
539	3.00	Exclusive LC A 2	K-EN-R
711	1.00	Conditional LC	q2.5-lane1-R
712	1.00	Conditional LC	q2.5-lane2-R
714	1.00	Conditional LC	q2.5-remain-R
18	1.00	Conditional LC	pedstrian-L
19	1.00	Conditional LC	pedstrian-R
715	0.00	Conditional LC	deltaq6.5-lane1-R
716	1.00	Conditional LC	deltaq6.5-lane2-R
721	1.00	Conditional LC	q2.5-lane1-R
722	1.00	Conditional LC	q2.5-lane2-R
724	1.00	Conditional LC	q2.5-remain-R
28	1.00	Conditional LC	pedstrian-L
29	1.00	Conditional LC	pedstrian-R
725	0.00	Conditional LC	deltaq6.5-lane1-R
726	1.00	Conditional LC	deltaq6.5-lane2-R
731	1.00	Conditional LC	q2.5-lane1-R
732	1.00	Conditional LC	q2.5-lane2-R
734	1.00	Conditional LC	q2.5-remain-R
38	1.00	Conditional LC	pedstrian-L
39	1.00	Conditional LC	pedstrian-R
735	0.00	Conditional LC	deltaq6.5-lane1-R
736	1.00	Conditional LC	deltaq6.5-lane2-R

Generated Loadcases

Number	Comb	Title
2331	1	MAX-MY BEAM PN-EN:K
2332	1	MIN-MY BEAM PN-EN:K
2333	1	MAX-VZ BEAM PN-EN:K
2334	1	MIN-VZ BEAM PN-EN:K
2335	1	MAX-N BEAM PN-EN:K
2336	1	MIN-N BEAM PN-EN:K
2337	1	MAX-P SPRI PN-EN:K
2338	1	MIN-P SPRI PN-EN:K
2339	1	MAX-UZ NODE PN-EN:K
2340	1	MIN-UZ NODE PN-EN:K

SOFiSTiK AG - www.sofistik.de

Composite bridge 38+50+38, b=14.25m, 2x2HL1100R HISTAR460 , slab 0.30m C30/37
PN-EN:LM1
prekombinacja

Superposition according to EuroNorm 1994 (2004) Composite Structures

Combination rule Number 1
Design Combination
Resulting loadcases type Q_1
Loadcase selection

Number	factor	type				Title
410	2.00	Exclusive LC	A	1	K-EN-R	
411	2.00	Exclusive LC	A	1	K-EN-R	
412	2.00	Exclusive LC	A	1	K-EN-R	
413	2.00	Exclusive LC	A	1	K-EN-R	
414	2.00	Exclusive LC	A	1	K-EN-R	
415	2.00	Exclusive LC	A	1	K-EN-R	
416	2.00	Exclusive LC	A	1	K-EN-R	
417	2.00	Exclusive LC	A	1	K-EN-R	
418	2.00	Exclusive LC	A	1	K-EN-R	
419	2.00	Exclusive LC	A	1	K-EN-R	
420	2.00	Exclusive LC	A	1	K-EN-R	
421	2.00	Exclusive LC	A	1	K-EN-R	
422	2.00	Exclusive LC	A	1	K-EN-R	
423	2.00	Exclusive LC	A	1	K-EN-R	
424	2.00	Exclusive LC	A	1	K-EN-R	
425	2.00	Exclusive LC	A	1	K-EN-R	
426	2.00	Exclusive LC	A	1	K-EN-R	
427	2.00	Exclusive LC	A	1	K-EN-R	
428	2.00	Exclusive LC	A	1	K-EN-R	
429	2.00	Exclusive LC	A	1	K-EN-R	
430	2.00	Exclusive LC	A	1	K-EN-R	
431	2.00	Exclusive LC	A	1	K-EN-R	
432	2.00	Exclusive LC	A	1	K-EN-R	
433	2.00	Exclusive LC	A	1	K-EN-R	
434	2.00	Exclusive LC	A	1	K-EN-R	
435	2.00	Exclusive LC	A	1	K-EN-R	
436	2.00	Exclusive LC	A	1	K-EN-R	
437	2.00	Exclusive LC	A	1	K-EN-R	
438	2.00	Exclusive LC	A	1	K-EN-R	
439	2.00	Exclusive LC	A	1	K-EN-R	
510	1.00	Exclusive LC	A	2	K-EN-R	
511	1.00	Exclusive LC	A	2	K-EN-R	
512	1.00	Exclusive LC	A	2	K-EN-R	
513	1.00	Exclusive LC	A	2	K-EN-R	
514	1.00	Exclusive LC	A	2	K-EN-R	
515	1.00	Exclusive LC	A	2	K-EN-R	
516	1.00	Exclusive LC	A	2	K-EN-R	
517	1.00	Exclusive LC	A	2	K-EN-R	
518	1.00	Exclusive LC	A	2	K-EN-R	
519	1.00	Exclusive LC	A	2	K-EN-R	
520	1.00	Exclusive LC	A	2	K-EN-R	
521	1.00	Exclusive LC	A	2	K-EN-R	
522	1.00	Exclusive LC	A	2	K-EN-R	
523	1.00	Exclusive LC	A	2	K-EN-R	
524	1.00	Exclusive LC	A	2	K-EN-R	
525	1.00	Exclusive LC	A	2	K-EN-R	
526	1.00	Exclusive LC	A	2	K-EN-R	
527	1.00	Exclusive LC	A	2	K-EN-R	
528	1.00	Exclusive LC	A	2	K-EN-R	
529	1.00	Exclusive LC	A	2	K-EN-R	
530	1.00	Exclusive LC	A	2	K-EN-R	
531	1.00	Exclusive LC	A	2	K-EN-R	
532	1.00	Exclusive LC	A	2	K-EN-R	
533	1.00	Exclusive LC	A	2	K-EN-R	
534	1.00	Exclusive LC	A	2	K-EN-R	
535	1.00	Exclusive LC	A	2	K-EN-R	
536	1.00	Exclusive LC	A	2	K-EN-R	

SOFiSTiK AG - www.sofistik.de

Composite bridge 38+50+38, b=14.25m, 2x2HL1100R HISTAR460 , slab 0.30m C30/37
PN-EN:LM1
prekombinacja

Loadcase selection

Number	factor	type	Title
537	1.00	Exclusive LC A 2	K-EN-R
538	1.00	Exclusive LC A 2	K-EN-R
539	1.00	Exclusive LC A 2	K-EN-R
711	1.00	Conditional LC	q2.5-lane1-R
712	1.00	Conditional LC	q2.5-lane2-R
714	1.00	Conditional LC	q2.5-remain-R
18	1.00	Conditional LC	pedstrian-L
19	1.00	Conditional LC	pedstrian-R
715	0.00	Conditional LC	deltaq6.5-lane1-R
716	0.00	Conditional LC	deltaq6.5-lane2-R
721	1.00	Conditional LC	q2.5-lane1-R
722	1.00	Conditional LC	q2.5-lane2-R
724	1.00	Conditional LC	q2.5-remain-R
28	1.00	Conditional LC	pedstrian-L
29	1.00	Conditional LC	pedstrian-R
725	0.00	Conditional LC	deltaq6.5-lane1-R
726	0.00	Conditional LC	deltaq6.5-lane2-R
731	1.00	Conditional LC	q2.5-lane1-R
732	1.00	Conditional LC	q2.5-lane2-R
734	1.00	Conditional LC	q2.5-remain-R
38	1.00	Conditional LC	pedstrian-L
39	1.00	Conditional LC	pedstrian-R
735	0.00	Conditional LC	deltaq6.5-lane1-R
736	0.00	Conditional LC	deltaq6.5-lane2-R

Generated Loadcases

Number	Comb	Title
2341	1	MAX-MY BEAM PN-EN:K
2342	1	MIN-MY BEAM PN-EN:K
2343	1	MAX-VZ BEAM PN-EN:K
2344	1	MIN-VZ BEAM PN-EN:K
2345	1	MAX-N BEAM PN-EN:K
2346	1	MIN-N BEAM PN-EN:K
2347	1	MAX-P SPRI PN-EN:K
2348	1	MIN-P SPRI PN-EN:K
2349	1	MAX-UZ NODE PN-EN:K
2350	1	MIN-UZ NODE PN-EN:K

SOFiSTiK AG - www.sofistik.de

Composite bridge 38+50+38, b=14.25m, 2x2HL1100R HISTAR460 , slab 0.30m C30/37
PN-EN:LM1
prekombinacja

Superposition according to EuroNorm 1994 (2004) Composite Structures

Combination rule Number 1
Design Combination
Resulting loadcases type Q_1
Loadcase selection

Number	factor	type				Title
410	1.00	Exclusive LC	A	1	K-EN-R	
411	1.00	Exclusive LC	A	1	K-EN-R	
412	1.00	Exclusive LC	A	1	K-EN-R	
413	1.00	Exclusive LC	A	1	K-EN-R	
414	1.00	Exclusive LC	A	1	K-EN-R	
415	1.00	Exclusive LC	A	1	K-EN-R	
416	1.00	Exclusive LC	A	1	K-EN-R	
417	1.00	Exclusive LC	A	1	K-EN-R	
418	1.00	Exclusive LC	A	1	K-EN-R	
419	1.00	Exclusive LC	A	1	K-EN-R	
420	1.00	Exclusive LC	A	1	K-EN-R	
421	1.00	Exclusive LC	A	1	K-EN-R	
422	1.00	Exclusive LC	A	1	K-EN-R	
423	1.00	Exclusive LC	A	1	K-EN-R	
424	1.00	Exclusive LC	A	1	K-EN-R	
425	1.00	Exclusive LC	A	1	K-EN-R	
426	1.00	Exclusive LC	A	1	K-EN-R	
427	1.00	Exclusive LC	A	1	K-EN-R	
428	1.00	Exclusive LC	A	1	K-EN-R	
429	1.00	Exclusive LC	A	1	K-EN-R	
430	1.00	Exclusive LC	A	1	K-EN-R	
431	1.00	Exclusive LC	A	1	K-EN-R	
432	1.00	Exclusive LC	A	1	K-EN-R	
433	1.00	Exclusive LC	A	1	K-EN-R	
434	1.00	Exclusive LC	A	1	K-EN-R	
435	1.00	Exclusive LC	A	1	K-EN-R	
436	1.00	Exclusive LC	A	1	K-EN-R	
437	1.00	Exclusive LC	A	1	K-EN-R	
438	1.00	Exclusive LC	A	1	K-EN-R	
439	1.00	Exclusive LC	A	1	K-EN-R	
510	2.00	Exclusive LC	A	2	K-EN-R	
511	2.00	Exclusive LC	A	2	K-EN-R	
512	2.00	Exclusive LC	A	2	K-EN-R	
513	2.00	Exclusive LC	A	2	K-EN-R	
514	2.00	Exclusive LC	A	2	K-EN-R	
515	2.00	Exclusive LC	A	2	K-EN-R	
516	2.00	Exclusive LC	A	2	K-EN-R	
517	2.00	Exclusive LC	A	2	K-EN-R	
518	2.00	Exclusive LC	A	2	K-EN-R	
519	2.00	Exclusive LC	A	2	K-EN-R	
520	2.00	Exclusive LC	A	2	K-EN-R	
521	2.00	Exclusive LC	A	2	K-EN-R	
522	2.00	Exclusive LC	A	2	K-EN-R	
523	2.00	Exclusive LC	A	2	K-EN-R	
524	2.00	Exclusive LC	A	2	K-EN-R	
525	2.00	Exclusive LC	A	2	K-EN-R	
526	2.00	Exclusive LC	A	2	K-EN-R	
527	2.00	Exclusive LC	A	2	K-EN-R	
528	2.00	Exclusive LC	A	2	K-EN-R	
529	2.00	Exclusive LC	A	2	K-EN-R	
530	2.00	Exclusive LC	A	2	K-EN-R	
531	2.00	Exclusive LC	A	2	K-EN-R	
532	2.00	Exclusive LC	A	2	K-EN-R	
533	2.00	Exclusive LC	A	2	K-EN-R	
534	2.00	Exclusive LC	A	2	K-EN-R	
535	2.00	Exclusive LC	A	2	K-EN-R	
536	2.00	Exclusive LC	A	2	K-EN-R	

SOFiSTiK AG - www.sofistik.de

Composite bridge 38+50+38, b=14.25m, 2x2HL1100R HISTAR460 , slab 0.30m C30/37
PN-EN:LM1
prekombinacja

Loadcase selection

Number	factor	type	Title
537	2.00	Exclusive LC A 2	K-EN-R
538	2.00	Exclusive LC A 2	K-EN-R
539	2.00	Exclusive LC A 2	K-EN-R
711	1.00	Conditional LC	q2.5-lane1-R
712	1.00	Conditional LC	q2.5-lane2-R
714	1.00	Conditional LC	q2.5-remain-R
18	1.00	Conditional LC	pedstrian-L
19	1.00	Conditional LC	pedstrian-R
715	0.00	Conditional LC	deltaq6.5-lane1-R
716	0.00	Conditional LC	deltaq6.5-lane2-R
721	1.00	Conditional LC	q2.5-lane1-R
722	1.00	Conditional LC	q2.5-lane2-R
724	1.00	Conditional LC	q2.5-remain-R
28	1.00	Conditional LC	pedstrian-L
29	1.00	Conditional LC	pedstrian-R
725	0.00	Conditional LC	deltaq6.5-lane1-R
726	0.00	Conditional LC	deltaq6.5-lane2-R
731	1.00	Conditional LC	q2.5-lane1-R
732	1.00	Conditional LC	q2.5-lane2-R
734	1.00	Conditional LC	q2.5-remain-R
38	1.00	Conditional LC	pedstrian-L
39	1.00	Conditional LC	pedstrian-R
735	0.00	Conditional LC	deltaq6.5-lane1-R
736	0.00	Conditional LC	deltaq6.5-lane2-R

Generated Loadcases

Number	Comb	Title
2351	1	MAX-MY BEAM PN-EN:K
2352	1	MIN-MY BEAM PN-EN:K
2353	1	MAX-VZ BEAM PN-EN:K
2354	1	MIN-VZ BEAM PN-EN:K
2355	1	MAX-N BEAM PN-EN:K
2356	1	MIN-N BEAM PN-EN:K
2357	1	MAX-P SPRI PN-EN:K
2358	1	MIN-P SPRI PN-EN:K
2359	1	MAX-UZ NODE PN-EN:K
2360	1	MIN-UZ NODE PN-EN:K

SOFiSTiK AG - www.sofistik.de

Composite bridge 38+50+38, b=14.25m, 2x2HL1100R HISTAR460 , slab 0.30m C30/37
PN-EN:LM1
prekombinacja

Superposition according to EuroNorm 1994 (2004) Composite Structures

Combination rule Number 1
Design Combination
Resulting loadcases type Q_1
Loadcase selection

Number	factor	type				Title
410	1.00	Exclusive LC	A	1	K-EN-R	
411	1.00	Exclusive LC	A	1	K-EN-R	
412	1.00	Exclusive LC	A	1	K-EN-R	
413	1.00	Exclusive LC	A	1	K-EN-R	
414	1.00	Exclusive LC	A	1	K-EN-R	
415	1.00	Exclusive LC	A	1	K-EN-R	
416	1.00	Exclusive LC	A	1	K-EN-R	
417	1.00	Exclusive LC	A	1	K-EN-R	
418	1.00	Exclusive LC	A	1	K-EN-R	
419	1.00	Exclusive LC	A	1	K-EN-R	
420	1.00	Exclusive LC	A	1	K-EN-R	
421	1.00	Exclusive LC	A	1	K-EN-R	
422	1.00	Exclusive LC	A	1	K-EN-R	
423	1.00	Exclusive LC	A	1	K-EN-R	
424	1.00	Exclusive LC	A	1	K-EN-R	
425	1.00	Exclusive LC	A	1	K-EN-R	
426	1.00	Exclusive LC	A	1	K-EN-R	
427	1.00	Exclusive LC	A	1	K-EN-R	
428	1.00	Exclusive LC	A	1	K-EN-R	
429	1.00	Exclusive LC	A	1	K-EN-R	
430	1.00	Exclusive LC	A	1	K-EN-R	
431	1.00	Exclusive LC	A	1	K-EN-R	
432	1.00	Exclusive LC	A	1	K-EN-R	
433	1.00	Exclusive LC	A	1	K-EN-R	
434	1.00	Exclusive LC	A	1	K-EN-R	
435	1.00	Exclusive LC	A	1	K-EN-R	
436	1.00	Exclusive LC	A	1	K-EN-R	
437	1.00	Exclusive LC	A	1	K-EN-R	
438	1.00	Exclusive LC	A	1	K-EN-R	
439	1.00	Exclusive LC	A	1	K-EN-R	
510	3.00	Exclusive LC	A	2	K-EN-R	
511	3.00	Exclusive LC	A	2	K-EN-R	
512	3.00	Exclusive LC	A	2	K-EN-R	
513	3.00	Exclusive LC	A	2	K-EN-R	
514	3.00	Exclusive LC	A	2	K-EN-R	
515	3.00	Exclusive LC	A	2	K-EN-R	
516	3.00	Exclusive LC	A	2	K-EN-R	
517	3.00	Exclusive LC	A	2	K-EN-R	
518	3.00	Exclusive LC	A	2	K-EN-R	
519	3.00	Exclusive LC	A	2	K-EN-R	
520	3.00	Exclusive LC	A	2	K-EN-R	
521	3.00	Exclusive LC	A	2	K-EN-R	
522	3.00	Exclusive LC	A	2	K-EN-R	
523	3.00	Exclusive LC	A	2	K-EN-R	
524	3.00	Exclusive LC	A	2	K-EN-R	
525	3.00	Exclusive LC	A	2	K-EN-R	
526	3.00	Exclusive LC	A	2	K-EN-R	
527	3.00	Exclusive LC	A	2	K-EN-R	
528	3.00	Exclusive LC	A	2	K-EN-R	
529	3.00	Exclusive LC	A	2	K-EN-R	
530	3.00	Exclusive LC	A	2	K-EN-R	
531	3.00	Exclusive LC	A	2	K-EN-R	
532	3.00	Exclusive LC	A	2	K-EN-R	
533	3.00	Exclusive LC	A	2	K-EN-R	
534	3.00	Exclusive LC	A	2	K-EN-R	
535	3.00	Exclusive LC	A	2	K-EN-R	
536	3.00	Exclusive LC	A	2	K-EN-R	

SOFiSTiK AG - www.sofistik.de

Composite bridge 38+50+38, b=14.25m, 2x2HL1100R HISTAR460 , slab 0.30m C30/37
PN-EN:LM1
prekombinacja

Loadcase selection

Number	factor	type	Title
537	3.00	Exclusive LC A 2	K-EN-R
538	3.00	Exclusive LC A 2	K-EN-R
539	3.00	Exclusive LC A 2	K-EN-R
711	1.00	Conditional LC	q2.5-lane1-R
712	1.00	Conditional LC	q2.5-lane2-R
714	1.00	Conditional LC	q2.5-remain-R
18	1.00	Conditional LC	pedstrian-L
19	1.00	Conditional LC	pedstrian-R
715	0.00	Conditional LC	deltaq6.5-lane1-R
716	1.00	Conditional LC	deltaq6.5-lane2-R
721	1.00	Conditional LC	q2.5-lane1-R
722	1.00	Conditional LC	q2.5-lane2-R
724	1.00	Conditional LC	q2.5-remain-R
28	1.00	Conditional LC	pedstrian-L
29	1.00	Conditional LC	pedstrian-R
725	0.00	Conditional LC	deltaq6.5-lane1-R
726	1.00	Conditional LC	deltaq6.5-lane2-R
731	1.00	Conditional LC	q2.5-lane1-R
732	1.00	Conditional LC	q2.5-lane2-R
734	1.00	Conditional LC	q2.5-remain-R
38	1.00	Conditional LC	pedstrian-L
39	1.00	Conditional LC	pedstrian-R
735	0.00	Conditional LC	deltaq6.5-lane1-R
736	1.00	Conditional LC	deltaq6.5-lane2-R

Generated Loadcases

Number	Comb	Title
2361	1	MAX-MY BEAM PN-EN:K
2362	1	MIN-MY BEAM PN-EN:K
2363	1	MAX-VZ BEAM PN-EN:K
2364	1	MIN-VZ BEAM PN-EN:K
2365	1	MAX-N BEAM PN-EN:K
2366	1	MIN-N BEAM PN-EN:K
2367	1	MAX-P SPRI PN-EN:K
2368	1	MIN-P SPRI PN-EN:K
2369	1	MAX-UZ NODE PN-EN:K
2370	1	MIN-UZ NODE PN-EN:K

SOFiSTiK AG - www.sofistik.de

Composite bridge 38+50+38, b=14.25m, 2x2HL1100R HISTAR460 , slab 0.30m C30/37
PN-EN:LM1
prekombinacja

Superposition according to EuroNorm 1994 (2004) Composite Structures

Combination rule Number 1
Design Combination
Resulting loadcases type Q_1
Loadcase selection

Number	factor	type	Title
2211	1.00	Exclusive LC A 1	MAX-MY BEAM PN-EN:K
2212	1.00	Exclusive LC A 1	MIN-MY BEAM PN-EN:K
2213	1.00	Exclusive LC A 1	MAX-VZ BEAM PN-EN:K
2214	1.00	Exclusive LC A 1	MIN-VZ BEAM PN-EN:K
2215	1.00	Exclusive LC A 1	MAX-N BEAM PN-EN:K
2216	1.00	Exclusive LC A 1	MIN-N BEAM PN-EN:K
2217	1.00	Exclusive LC A 1	MAX-P SPRI PN-EN:K
2218	1.00	Exclusive LC A 1	MIN-P SPRI PN-EN:K
2219	1.00	Exclusive LC A 1	MAX-UZ NODE PN-EN:K
2220	1.00	Exclusive LC A 1	MIN-UZ NODE PN-EN:K
2221	1.00	Exclusive LC A 1	MAX-MY BEAM PN-EN:K
2222	1.00	Exclusive LC A 1	MIN-MY BEAM PN-EN:K
2223	1.00	Exclusive LC A 1	MAX-VZ BEAM PN-EN:K
2224	1.00	Exclusive LC A 1	MIN-VZ BEAM PN-EN:K
2225	1.00	Exclusive LC A 1	MAX-N BEAM PN-EN:K
2226	1.00	Exclusive LC A 1	MIN-N BEAM PN-EN:K
2227	1.00	Exclusive LC A 1	MAX-P SPRI PN-EN:K
2228	1.00	Exclusive LC A 1	MIN-P SPRI PN-EN:K
2229	1.00	Exclusive LC A 1	MAX-UZ NODE PN-EN:K
2230	1.00	Exclusive LC A 1	MIN-UZ NODE PN-EN:K
2231	1.00	Exclusive LC A 1	MAX-MY BEAM PN-EN:K
2232	1.00	Exclusive LC A 1	MIN-MY BEAM PN-EN:K
2233	1.00	Exclusive LC A 1	MAX-VZ BEAM PN-EN:K
2234	1.00	Exclusive LC A 1	MIN-VZ BEAM PN-EN:K
2235	1.00	Exclusive LC A 1	MAX-N BEAM PN-EN:K
2236	1.00	Exclusive LC A 1	MIN-N BEAM PN-EN:K
2237	1.00	Exclusive LC A 1	MAX-P SPRI PN-EN:K
2238	1.00	Exclusive LC A 1	MIN-P SPRI PN-EN:K
2239	1.00	Exclusive LC A 1	MAX-UZ NODE PN-EN:K
2240	1.00	Exclusive LC A 1	MIN-UZ NODE PN-EN:K
2241	1.00	Exclusive LC A 1	MAX-MY BEAM PN-EN:K
2242	1.00	Exclusive LC A 1	MIN-MY BEAM PN-EN:K
2243	1.00	Exclusive LC A 1	MAX-VZ BEAM PN-EN:K
2244	1.00	Exclusive LC A 1	MIN-VZ BEAM PN-EN:K
2245	1.00	Exclusive LC A 1	MAX-N BEAM PN-EN:K
2246	1.00	Exclusive LC A 1	MIN-N BEAM PN-EN:K
2247	1.00	Exclusive LC A 1	MAX-P SPRI PN-EN:K
2248	1.00	Exclusive LC A 1	MIN-P SPRI PN-EN:K
2249	1.00	Exclusive LC A 1	MAX-UZ NODE PN-EN:K
2250	1.00	Exclusive LC A 1	MIN-UZ NODE PN-EN:K
2251	1.00	Exclusive LC A 1	MAX-MY BEAM PN-EN:K
2252	1.00	Exclusive LC A 1	MIN-MY BEAM PN-EN:K
2253	1.00	Exclusive LC A 1	MAX-VZ BEAM PN-EN:K
2254	1.00	Exclusive LC A 1	MIN-VZ BEAM PN-EN:K
2255	1.00	Exclusive LC A 1	MAX-N BEAM PN-EN:K
2256	1.00	Exclusive LC A 1	MIN-N BEAM PN-EN:K
2257	1.00	Exclusive LC A 1	MAX-P SPRI PN-EN:K
2258	1.00	Exclusive LC A 1	MIN-P SPRI PN-EN:K
2259	1.00	Exclusive LC A 1	MAX-UZ NODE PN-EN:K
2260	1.00	Exclusive LC A 1	MIN-UZ NODE PN-EN:K
2261	1.00	Exclusive LC A 1	MAX-MY BEAM PN-EN:K
2262	1.00	Exclusive LC A 1	MIN-MY BEAM PN-EN:K
2263	1.00	Exclusive LC A 1	MAX-VZ BEAM PN-EN:K
2264	1.00	Exclusive LC A 1	MIN-VZ BEAM PN-EN:K
2265	1.00	Exclusive LC A 1	MAX-N BEAM PN-EN:K
2266	1.00	Exclusive LC A 1	MIN-N BEAM PN-EN:K
2267	1.00	Exclusive LC A 1	MAX-P SPRI PN-EN:K

SOFiSTiK AG - www.sofistik.de

Composite bridge 38+50+38, b=14.25m, 2x2HL1100R HISTAR460 , slab 0.30m C30/37
PN-EN:LM1
prekombinacja

Loadcase selection

Number	factor	type	Title
2268	1.00	Exclusive LC A 1	MIN-P SPRI PN-EN:K
2269	1.00	Exclusive LC A 1	MAX-UZ NODE PN-EN:K
2270	1.00	Exclusive LC A 1	MIN-UZ NODE PN-EN:K
2311	1.00	Exclusive LC A 1	MAX-MY BEAM PN-EN:K
2312	1.00	Exclusive LC A 1	MIN-MY BEAM PN-EN:K
2313	1.00	Exclusive LC A 1	MAX-VZ BEAM PN-EN:K
2314	1.00	Exclusive LC A 1	MIN-VZ BEAM PN-EN:K
2315	1.00	Exclusive LC A 1	MAX-N BEAM PN-EN:K
2316	1.00	Exclusive LC A 1	MIN-N BEAM PN-EN:K
2317	1.00	Exclusive LC A 1	MAX-P SPRI PN-EN:K
2318	1.00	Exclusive LC A 1	MIN-P SPRI PN-EN:K
2319	1.00	Exclusive LC A 1	MAX-UZ NODE PN-EN:K
2320	1.00	Exclusive LC A 1	MIN-UZ NODE PN-EN:K
2321	1.00	Exclusive LC A 1	MAX-MY BEAM PN-EN:K
2322	1.00	Exclusive LC A 1	MIN-MY BEAM PN-EN:K
2323	1.00	Exclusive LC A 1	MAX-VZ BEAM PN-EN:K
2324	1.00	Exclusive LC A 1	MIN-VZ BEAM PN-EN:K
2325	1.00	Exclusive LC A 1	MAX-N BEAM PN-EN:K
2326	1.00	Exclusive LC A 1	MIN-N BEAM PN-EN:K
2327	1.00	Exclusive LC A 1	MAX-P SPRI PN-EN:K
2328	1.00	Exclusive LC A 1	MIN-P SPRI PN-EN:K
2329	1.00	Exclusive LC A 1	MAX-UZ NODE PN-EN:K
2330	1.00	Exclusive LC A 1	MIN-UZ NODE PN-EN:K
2331	1.00	Exclusive LC A 1	MAX-MY BEAM PN-EN:K
2332	1.00	Exclusive LC A 1	MIN-MY BEAM PN-EN:K
2333	1.00	Exclusive LC A 1	MAX-VZ BEAM PN-EN:K
2334	1.00	Exclusive LC A 1	MIN-VZ BEAM PN-EN:K
2335	1.00	Exclusive LC A 1	MAX-N BEAM PN-EN:K
2336	1.00	Exclusive LC A 1	MIN-N BEAM PN-EN:K
2337	1.00	Exclusive LC A 1	MAX-P SPRI PN-EN:K
2338	1.00	Exclusive LC A 1	MIN-P SPRI PN-EN:K
2339	1.00	Exclusive LC A 1	MAX-UZ NODE PN-EN:K
2340	1.00	Exclusive LC A 1	MIN-UZ NODE PN-EN:K
2341	1.00	Exclusive LC A 1	MAX-MY BEAM PN-EN:K
2342	1.00	Exclusive LC A 1	MIN-MY BEAM PN-EN:K
2343	1.00	Exclusive LC A 1	MAX-VZ BEAM PN-EN:K
2344	1.00	Exclusive LC A 1	MIN-VZ BEAM PN-EN:K
2345	1.00	Exclusive LC A 1	MAX-N BEAM PN-EN:K
2346	1.00	Exclusive LC A 1	MIN-N BEAM PN-EN:K
2347	1.00	Exclusive LC A 1	MAX-P SPRI PN-EN:K
2348	1.00	Exclusive LC A 1	MIN-P SPRI PN-EN:K
2349	1.00	Exclusive LC A 1	MAX-UZ NODE PN-EN:K
2350	1.00	Exclusive LC A 1	MIN-UZ NODE PN-EN:K
2351	1.00	Exclusive LC A 1	MAX-MY BEAM PN-EN:K
2352	1.00	Exclusive LC A 1	MIN-MY BEAM PN-EN:K
2353	1.00	Exclusive LC A 1	MAX-VZ BEAM PN-EN:K
2354	1.00	Exclusive LC A 1	MIN-VZ BEAM PN-EN:K
2355	1.00	Exclusive LC A 1	MAX-N BEAM PN-EN:K
2356	1.00	Exclusive LC A 1	MIN-N BEAM PN-EN:K
2357	1.00	Exclusive LC A 1	MAX-P SPRI PN-EN:K
2358	1.00	Exclusive LC A 1	MIN-P SPRI PN-EN:K
2359	1.00	Exclusive LC A 1	MAX-UZ NODE PN-EN:K
2360	1.00	Exclusive LC A 1	MIN-UZ NODE PN-EN:K
2361	1.00	Exclusive LC A 1	MAX-MY BEAM PN-EN:K
2362	1.00	Exclusive LC A 1	MIN-MY BEAM PN-EN:K
2363	1.00	Exclusive LC A 1	MAX-VZ BEAM PN-EN:K
2364	1.00	Exclusive LC A 1	MIN-VZ BEAM PN-EN:K
2365	1.00	Exclusive LC A 1	MAX-N BEAM PN-EN:K
2366	1.00	Exclusive LC A 1	MIN-N BEAM PN-EN:K
2367	1.00	Exclusive LC A 1	MAX-P SPRI PN-EN:K
2368	1.00	Exclusive LC A 1	MIN-P SPRI PN-EN:K
2369	1.00	Exclusive LC A 1	MAX-UZ NODE PN-EN:K
2370	1.00	Exclusive LC A 1	MIN-UZ NODE PN-EN:K

SOFiSTiK AG - www.sofistik.de

```
Composite bridge 38+50+38, b=14.25m, 2x2HL1100R HISTAR460 , slab 0.30m C30/37
PN-EN:LM1
prekombinacja
```

Generated Loadcases

```
Number Comb Title
  2101    1 MAX-MY BEAM Precombination Q
  2102    1 MIN-MY BEAM Precombination Q
  2103    1 MAX-VZ BEAM Precombination Q
  2104    1 MIN-VZ BEAM Precombination Q
  2105    1 MAX-N BEAM Precombination Q
  2106    1 MIN-N BEAM Precombination Q
  2107    1 MAX-P SPRI Precombination Q
  2108    1 MIN-P SPRI Precombination Q
  2109    1 MAX-UZ NODE Precombination Q
  2110    1 MIN-UZ NODE Precombination Q
+++++ warning no.    34 in program MUEB
 Element type BEAM Loadcase 2217, does not contribute anything to superposition
+++++ warning no.    34 in program MUEB
 Element type BEAM Loadcase 2218, does not contribute anything to superposition
+++++ warning no.    34 in program MUEB
 Element type BEAM Loadcase 2219, does not contribute anything to superposition
+++++ warning no.    34 in program MUEB
 Element type BEAM Loadcase 2220, does not contribute anything to superposition
+++++ warning no.    34 in program MUEB
 Element type BEAM Loadcase 2227, does not contribute anything to superposition
+++++ warning no.    34 in program MUEB
 Element type BEAM Loadcase 2228, does not contribute anything to superposition
+++++ warning no.    34 in program MUEB
 Element type BEAM Loadcase 2229, does not contribute anything to superposition
+++++ warning no.    34 in program MUEB
 Element type BEAM Loadcase 2230, does not contribute anything to superposition
+++++ warning no.    34 in program MUEB
 Element type BEAM Loadcase 2237, does not contribute anything to superposition
+++++ warning no.    34 in program MUEB
 Element type BEAM Loadcase 2238, does not contribute anything to superposition
+++++ warning no.    34 in program MUEB
 Element type BEAM Loadcase 2239, does not contribute anything to superposition
+++++ warning no.    34 in program MUEB
 Element type BEAM Loadcase 2240, does not contribute anything to superposition
+++++ warning no.    34 in program MUEB
 Element type BEAM Loadcase 2247, does not contribute anything to superposition
+++++ warning no.    34 in program MUEB
 Element type BEAM Loadcase 2248, does not contribute anything to superposition
+++++ warning no.    34 in program MUEB
 Element type BEAM Loadcase 2249, does not contribute anything to superposition
+++++ warning no.    34 in program MUEB
 Element type BEAM Loadcase 2250, does not contribute anything to superposition
+++++ warning no.    34 in program MUEB
 Element type BEAM Loadcase 2257, does not contribute anything to superposition
+++++ warning no.    34 in program MUEB
 Element type BEAM Loadcase 2258, does not contribute anything to superposition
+++++ warning no.    34 in program MUEB
 Element type BEAM Loadcase 2259, does not contribute anything to superposition
+++++ warning no.    34 in program MUEB
 Element type BEAM Loadcase 2260, does not contribute anything to superposition
+++++ warning no.    34 in program MUEB
 Element type BEAM Loadcase 2267, does not contribute anything to superposition
+++++ warning no.    34 in program MUEB
 Element type BEAM Loadcase 2268, does not contribute anything to superposition
+++++ warning no.    34 in program MUEB
 Element type BEAM Loadcase 2269, does not contribute anything to superposition
+++++ warning no.    34 in program MUEB
 Element type BEAM Loadcase 2270, does not contribute anything to superposition
+++++ warning no.    34 in program MUEB
 Element type BEAM Loadcase 2317, does not contribute anything to superposition
+++++ warning no.    34 in program MUEB
 Element type BEAM Loadcase 2318, does not contribute anything to superposition
```

SOFiSTiK AG - www.sofistik.de

```
Composite bridge 38+50+38, b=14.25m, 2x2HL1100R HISTAR460 , slab 0.30m C30/37
PN-EN:LM1
prekombinacja

+++++ warning no.    34 in program MUEB
 Element type BEAM Loadcase 2319, does not contribute anything to superposition
+++++ warning no.    34 in program MUEB
 Element type BEAM Loadcase 2320, does not contribute anything to superposition
+++++ warning no.    34 in program MUEB
 Element type BEAM Loadcase 2327, does not contribute anything to superposition
+++++ warning no.    34 in program MUEB
 Element type BEAM Loadcase 2328, does not contribute anything to superposition
+++++ warning no.    34 in program MUEB
 Element type BEAM Loadcase 2329, does not contribute anything to superposition
+++++ warning no.    34 in program MUEB
 Element type BEAM Loadcase 2330, does not contribute anything to superposition
+++++ warning no.    34 in program MUEB
 Element type BEAM Loadcase 2337, does not contribute anything to superposition
+++++ warning no.    34 in program MUEB
 Element type BEAM Loadcase 2338, does not contribute anything to superposition
+++++ warning no.    34 in program MUEB
 Element type BEAM Loadcase 2339, does not contribute anything to superposition
+++++ warning no.    34 in program MUEB
 Element type BEAM Loadcase 2340, does not contribute anything to superposition
+++++ warning no.    34 in program MUEB
 Element type BEAM Loadcase 2347, does not contribute anything to superposition
+++++ warning no.    34 in program MUEB
 Element type BEAM Loadcase 2348, does not contribute anything to superposition
+++++ warning no.    34 in program MUEB
 Element type BEAM Loadcase 2349, does not contribute anything to superposition
+++++ warning no.    34 in program MUEB
 Element type BEAM Loadcase 2350, does not contribute anything to superposition
+++++ warning no.    34 in program MUEB
 Element type BEAM Loadcase 2357, does not contribute anything to superposition
+++++ warning no.    34 in program MUEB
 Element type BEAM Loadcase 2358, does not contribute anything to superposition
+++++ warning no.    34 in program MUEB
 Element type BEAM Loadcase 2359, does not contribute anything to superposition
+++++ warning no.    34 in program MUEB
 Element type BEAM Loadcase 2360, does not contribute anything to superposition
+++++ warning no.    34 in program MUEB
 Element type BEAM Loadcase 2367, does not contribute anything to superposition
+++++ warning no.    34 in program MUEB
 Element type BEAM Loadcase 2368, does not contribute anything to superposition
+++++ warning no.    34 in program MUEB
 Element type BEAM Loadcase 2369, does not contribute anything to superposition
+++++ warning no.    34 in program MUEB
 Element type BEAM Loadcase 2370, does not contribute anything to superposition
+++++ warning no.    34 in program MUEB
 Element type SPRI Loadcase 2211, does not contribute anything to superposition
+++++ warning no.    34 in program MUEB
 Element type SPRI Loadcase 2212, does not contribute anything to superposition
+++++ warning no. 10989 in program MUEB
Warning    34 has been issued    50 times, further printing will be supressed
```

SOFiSTiK AG - www.sofistik.de

Composite bridge 38+50+38, b=14.25m, 2x2HL1100R HISTAR460 , slab 0.30m C30/37
Combination DESI: ULS-total sum

Superposition according to EuroNorm 1994 (2004) Composite Structures

Combination rule Number 1
Ultimate Design combination
Superposition according to manual MAXIMA formula 1

$$E_d = E\left\{\sum_{j\geq 1}\gamma_{G,j}\cdot G_{k,j} \oplus \gamma_P\cdot P_k \oplus \gamma_{Q,1}\cdot Q_{k,1} \oplus \sum_{i>1}\gamma_{Q,i}\cdot\psi_{0,i}\cdot Q_{k,i}\right\}$$

Resulting loadcases type Ultimate Design combination

Loadcase selection and Actions

Act	type	γ-u	γ-f	γ-a	ψ-0	ψ-1	ψ-2	ψ-1'	
		LC factor	Type of loadcase						Title
C_2	P	1.35	0.00	1.00	1.00	1.00	1.00	1.00	C+S
2022		1.00	Conditional LC				MAX-MY BEAM Part precomb		
C_1	P	1.35	1.00	1.00	1.00	1.00	1.00	1.00	C+S
2021		1.00	permanent load grouped in actions					MAX-MY BEAM Part precomb	
F_1	Q	1.20	0.00	1.00	1.00	1.00	1.00	1.00	settlements
2601		1.00	Exclusive LC	A 7			MAX-MY BEAM Precombinati		
2602		1.00	Exclusive LC	A 7			MIN-MY BEAM Precombinati		
2603		1.00	Exclusive LC	A 7			MAX-VZ BEAM Precombinati		
2604		1.00	Exclusive LC	A 7			MIN-VZ BEAM Precombinati		
2605		1.00	Exclusive LC	A 7			MAX-N BEAM Precombinatio		
2606		1.00	Exclusive LC	A 7			MIN-N BEAM Precombinatio		
2607		1.00	Exclusive LC	A 7			MAX-P SPRI Precombinatio		
2608		1.00	Exclusive LC	A 7			MIN-P SPRI Precombinatio		
2609		1.00	Exclusive LC	A 7			MAX-UZ NODE Precombinati		
2610		1.00	Exclusive LC	A 7			MIN-UZ NODE Precombinati		
G_2	G	1.35	1.00	1.00	1.00	1.00	1.00	1.00	gn
2002		1.00	permanent load grouped in actions					MAX-MY BEAM Part precomb	
G_1	G	1.35	1.00	1.00	1.00	1.00	1.00	1.00	gk
2001		1.00	permanent load grouped in actions					MAX-MY BEAM Part precomb	
Q	Q	1.50	0.00	1.00	0.75	0.75	0.20	0.80	gr1a EN
2101		1.00	Exclusive LC	A 5			MAX-MY BEAM Precombinati		
2102		1.00	Exclusive LC	A 5			MIN-MY BEAM Precombinati		
2103		1.00	Exclusive LC	A 5			MAX-VZ BEAM Precombinati		
2104		1.00	Exclusive LC	A 5			MIN-VZ BEAM Precombinati		
2105		1.00	Exclusive LC	A 5			MAX-N BEAM Precombinatio		
2106		1.00	Exclusive LC	A 5			MIN-N BEAM Precombinatio		
2107		1.00	Exclusive LC	A 5			MAX-P SPRI Precombinatio		
2108		1.00	Exclusive LC	A 5			MIN-P SPRI Precombinatio		
2109		1.00	Exclusive LC	A 5			MAX-UZ NODE Precombinati		
2110		1.00	Exclusive LC	A 5			MIN-UZ NODE Precombinati		
T_1	Q	1.50	0.00	1.00	0.60	0.60	0.50	1.00	temp
2701		1.00	Exclusive LC	A 8			MAX-MY BEAM Precombinati		
2702		1.00	Exclusive LC	A 8			MIN-MY BEAM Precombinati		
2703		1.00	Exclusive LC	A 8			MAX-VZ BEAM Precombinati		
2704		1.00	Exclusive LC	A 8			MIN-VZ BEAM Precombinati		
2705		1.00	Exclusive LC	A 8			MAX-N BEAM Precombinatio		
2706		1.00	Exclusive LC	A 8			MIN-N BEAM Precombinatio		
2707		1.00	Exclusive LC	A 8			MAX-P SPRI Precombinatio		
2708		1.00	Exclusive LC	A 8			MIN-P SPRI Precombinatio		
2709		1.00	Exclusive LC	A 8			MAX-UZ NODE Precombinati		
2710		1.00	Exclusive LC	A 8			MIN-UZ NODE Precombinati		

Generated Loadcases

Number	Comb	Title
3101	1	MAX-MY BEAM ULS total sum
3102	1	MIN-MY BEAM ULS total sum
3103	1	MAX-VZ BEAM ULS total sum

SOFiSTiK AG - www.sofistik.de

Composite bridge 38+50+38, b=14.25m, 2x2HL1100R HISTAR460 , slab 0.30m C30/37
Combination DESI: ULS-total sum

Generated Loadcases

```
Number Comb Title
  3104    1 MIN-VZ BEAM ULS total sum
  3105    1 MAX-N BEAM ULS total sum
  3106    1 MIN-N BEAM ULS total sum
  3107    1 MAX-P SPRI ULS total sum
  3108    1 MIN-P SPRI ULS total sum
  3109    1 MAX-UZ NODE ULS total sum
  3110    1 MIN-UZ NODE ULS total sum
+++++ warning no.    34 in program MUEB
 Element type BEAM Loadcase 2107, does not contribute anything to superposition
+++++ warning no.    34 in program MUEB
 Element type BEAM Loadcase 2108, does not contribute anything to superposition
+++++ warning no.    34 in program MUEB
 Element type BEAM Loadcase 2109, does not contribute anything to superposition
+++++ warning no.    34 in program MUEB
 Element type BEAM Loadcase 2110, does not contribute anything to superposition
+++++ warning no.    34 in program MUEB
 Element type BEAM Loadcase 2607, does not contribute anything to superposition
+++++ warning no.    34 in program MUEB
 Element type BEAM Loadcase 2608, does not contribute anything to superposition
+++++ warning no.    34 in program MUEB
 Element type BEAM Loadcase 2609, does not contribute anything to superposition
+++++ warning no.    34 in program MUEB
 Element type BEAM Loadcase 2610, does not contribute anything to superposition
+++++ warning no.    34 in program MUEB
 Element type BEAM Loadcase 2707, does not contribute anything to superposition
+++++ warning no.    34 in program MUEB
 Element type BEAM Loadcase 2708, does not contribute anything to superposition
+++++ warning no.    34 in program MUEB
 Element type BEAM Loadcase 2709, does not contribute anything to superposition
+++++ warning no.    34 in program MUEB
 Element type BEAM Loadcase 2710, does not contribute anything to superposition
+++++ warning no.    34 in program MUEB
 Element type SPRI Loadcase 2101, does not contribute anything to superposition
+++++ warning no.    34 in program MUEB
 Element type SPRI Loadcase 2102, does not contribute anything to superposition
+++++ warning no.    34 in program MUEB
 Element type SPRI Loadcase 2103, does not contribute anything to superposition
+++++ warning no.    34 in program MUEB
 Element type SPRI Loadcase 2104, does not contribute anything to superposition
+++++ warning no.    34 in program MUEB
 Element type SPRI Loadcase 2105, does not contribute anything to superposition
+++++ warning no.    34 in program MUEB
 Element type SPRI Loadcase 2106, does not contribute anything to superposition
+++++ warning no.    34 in program MUEB
 Element type SPRI Loadcase 2109, does not contribute anything to superposition
+++++ warning no.    34 in program MUEB
 Element type SPRI Loadcase 2110, does not contribute anything to superposition
+++++ warning no.    34 in program MUEB
 Element type SPRI Loadcase 2601, does not contribute anything to superposition
+++++ warning no.    34 in program MUEB
 Element type SPRI Loadcase 2602, does not contribute anything to superposition
+++++ warning no.    34 in program MUEB
 Element type SPRI Loadcase 2603, does not contribute anything to superposition
+++++ warning no.    34 in program MUEB
 Element type SPRI Loadcase 2604, does not contribute anything to superposition
+++++ warning no.    34 in program MUEB
 Element type SPRI Loadcase 2605, does not contribute anything to superposition
+++++ warning no.    34 in program MUEB
 Element type SPRI Loadcase 2606, does not contribute anything to superposition
+++++ warning no.    34 in program MUEB
 Element type SPRI Loadcase 2609, does not contribute anything to superposition
+++++ warning no.    34 in program MUEB
 Element type SPRI Loadcase 2610, does not contribute anything to superposition
```

SOFiSTiK AG - www.sofistik.de

```
Composite bridge 38+50+38, b=14.25m, 2x2HL1100R HISTAR460 , slab 0.30m C30/37
Combination DESI: ULS-total sum

+++++ warning no.    34 in program MUEB
 Element type SPRI Loadcase 2701, does not contribute anything to superposition
+++++ warning no.    34 in program MUEB
 Element type SPRI Loadcase 2702, does not contribute anything to superposition
+++++ warning no.    34 in program MUEB
 Element type SPRI Loadcase 2703, does not contribute anything to superposition
+++++ warning no.    34 in program MUEB
 Element type SPRI Loadcase 2704, does not contribute anything to superposition
+++++ warning no.    34 in program MUEB
 Element type SPRI Loadcase 2705, does not contribute anything to superposition
+++++ warning no.    34 in program MUEB
 Element type SPRI Loadcase 2706, does not contribute anything to superposition
+++++ warning no.    34 in program MUEB
 Element type SPRI Loadcase 2709, does not contribute anything to superposition
+++++ warning no.    34 in program MUEB
 Element type SPRI Loadcase 2710, does not contribute anything to superposition
+++++ warning no.    34 in program MUEB
 Element type NODE Loadcase 2101, does not contribute anything to superposition
+++++ warning no.    34 in program MUEB
 Element type NODE Loadcase 2102, does not contribute anything to superposition
+++++ warning no.    34 in program MUEB
 Element type NODE Loadcase 2103, does not contribute anything to superposition
+++++ warning no.    34 in program MUEB
 Element type NODE Loadcase 2104, does not contribute anything to superposition
+++++ warning no.    34 in program MUEB
 Element type NODE Loadcase 2105, does not contribute anything to superposition
+++++ warning no.    34 in program MUEB
 Element type NODE Loadcase 2106, does not contribute anything to superposition
+++++ warning no.    34 in program MUEB
 Element type NODE Loadcase 2107, does not contribute anything to superposition
+++++ warning no.    34 in program MUEB
 Element type NODE Loadcase 2108, does not contribute anything to superposition
+++++ warning no.    34 in program MUEB
 Element type NODE Loadcase 2601, does not contribute anything to superposition
+++++ warning no.    34 in program MUEB
 Element type NODE Loadcase 2602, does not contribute anything to superposition
+++++ warning no.    34 in program MUEB
 Element type NODE Loadcase 2603, does not contribute anything to superposition
+++++ warning no.    34 in program MUEB
 Element type NODE Loadcase 2604, does not contribute anything to superposition
+++++ warning no.    34 in program MUEB
 Element type NODE Loadcase 2605, does not contribute anything to superposition
+++++ warning no.    34 in program MUEB
 Element type NODE Loadcase 2606, does not contribute anything to superposition
+++++ warning no. 10989 in program MUEB
Warning    34 has been issued    50 times, further printing will be supressed
```

SOFiSTiK AG - www.sofistik.de

Composite bridge 38+50+38, b=14.25m, 2x2HL1100R HISTAR460 , slab 0.30m C30/37
Combination DESI: ULS G+C

Superposition according to EuroNorm 1994 (2004) Composite Structures

Combination rule Number 1
Ultimate Design combination
Superposition according to manual MAXIMA formula 1

$$E_d = E\left\{\sum_{j\geq 1}\gamma_{G,j}\cdot G_{k,j} \oplus \gamma_P\cdot P_k \oplus \gamma_{Q,1}\cdot Q_{k,1} \oplus \sum_{i>1}\gamma_{Q,i}\cdot\psi_{0,i}\cdot Q_{k,i}\right\}$$

Resulting loadcases type Ultimate Design combination

Loadcase selection and Actions

Act	type	γ-u	γ-f	γ-a	ψ-0	ψ-1	ψ-2	ψ-1'	Title
C_1	P	1.35	1.00	1.00	1.00	1.00	1.00	1.00	C+S
2021	1.00 permanent load grouped in actions								MAX-MY BEAM Part precomb
C_2	P	1.35	0.00	1.00	1.00	1.00	1.00	1.00	C+S
2022	1.00 Conditional LC					MAX-MY BEAM Part precomb			
G_1	G	1.35	1.00	1.00	1.00	1.00	1.00	1.00	gk
2001	1.00 permanent load grouped in actions								MAX-MY BEAM Part precomb
G_2	G	1.35	1.00	1.00	1.00	1.00	1.00	1.00	gn
2002	1.00 permanent load grouped in actions								MAX-MY BEAM Part precomb

Generated Loadcases

Number	Comb	Title
3111	1	MAX-MY BEAM ULS G+C
3112	1	MIN-MY BEAM ULS G+C
3113	1	MAX-VZ BEAM ULS G+C
3114	1	MIN-VZ BEAM ULS G+C
3115	1	MAX-N BEAM ULS G+C
3116	1	MIN-N BEAM ULS G+C
3117	1	MAX-P SPRI ULS G+C
3118	1	MIN-P SPRI ULS G+C
3119	1	MAX-UZ NODE ULS G+C
3120	1	MIN-UZ NODE ULS G+C

SOFiSTiK AG - www.sofistik.de

Composite bridge 38+50+38, b=14.25m, 2x2HL1100R HISTAR460 , slab 0.30m C30/37
Combination DESI: Q+F+T

Superposition according to EuroNorm 1994 (2004) Composite Structures

Combination rule Number 1
Ultimate Design combination
Superposition according to manual MAXIMA formula 1

$$E_d = E\left\{\sum_{j\geq 1}\gamma_{G,j}\cdot G_{k,j} \oplus \gamma_P\cdot P_k \oplus \gamma_{Q,1}\cdot Q_{k,1} \oplus \sum_{i>1}\gamma_{Q,i}\cdot\psi_{0,i}\cdot Q_{k,i}\right\}$$

Resulting loadcases type Ultimate Design combination

Loadcase selection and Actions

Act	type	γ-u	γ-f	γ-a	ψ-0	ψ-1	ψ-2	ψ-1'	Title
F_1	Q	1.20	0.00	1.00	1.00	1.00	1.00	1.00	settlements
2601	1.00	Exclusive LC	A 7						MAX-MY BEAM Precombinati
2602	1.00	Exclusive LC	A 7						MIN-MY BEAM Precombinati
2603	1.00	Exclusive LC	A 7						MAX-VZ BEAM Precombinati
2604	1.00	Exclusive LC	A 7						MIN-VZ BEAM Precombinati
2605	1.00	Exclusive LC	A 7						MAX-N BEAM Precombinatio
2606	1.00	Exclusive LC	A 7						MIN-N BEAM Precombinatio
2607	1.00	Exclusive LC	A 7						MAX-P SPRI Precombinatio
2608	1.00	Exclusive LC	A 7						MIN-P SPRI Precombinatio
2609	1.00	Exclusive LC	A 7						MAX-UZ NODE Precombinati
2610	1.00	Exclusive LC	A 7						MIN-UZ NODE Precombinati
Q	Q	1.50	0.00	1.00	0.75	0.75	0.20	0.80	gr1a EN
2101	1.00	Exclusive LC	A 5						MAX-MY BEAM Precombinati
2102	1.00	Exclusive LC	A 5						MIN-MY BEAM Precombinati
2103	1.00	Exclusive LC	A 5						MAX-VZ BEAM Precombinati
2104	1.00	Exclusive LC	A 5						MIN-VZ BEAM Precombinati
2105	1.00	Exclusive LC	A 5						MAX-N BEAM Precombinatio
2106	1.00	Exclusive LC	A 5						MIN-N BEAM Precombinatio
2107	1.00	Exclusive LC	A 5						MAX-P SPRI Precombinatio
2108	1.00	Exclusive LC	A 5						MIN-P SPRI Precombinatio
2109	1.00	Exclusive LC	A 5						MAX-UZ NODE Precombinati
2110	1.00	Exclusive LC	A 5						MIN-UZ NODE Precombinati
T_1	Q	1.50	0.00	1.00	0.60	0.60	0.50	1.00	temp
2701	1.00	Exclusive LC	A 8						MAX-MY BEAM Precombinati
2702	1.00	Exclusive LC	A 8						MIN-MY BEAM Precombinati
2703	1.00	Exclusive LC	A 8						MAX-VZ BEAM Precombinati
2704	1.00	Exclusive LC	A 8						MIN-VZ BEAM Precombinati
2705	1.00	Exclusive LC	A 8						MAX-N BEAM Precombinatio
2706	1.00	Exclusive LC	A 8						MIN-N BEAM Precombinatio
2707	1.00	Exclusive LC	A 8						MAX-P SPRI Precombinatio
2708	1.00	Exclusive LC	A 8						MIN-P SPRI Precombinatio
2709	1.00	Exclusive LC	A 8						MAX-UZ NODE Precombinati
2710	1.00	Exclusive LC	A 8						MIN-UZ NODE Precombinati

Generated Loadcases

Number	Comb	Title
3141	1	MAX-MY BEAM ULS Q+F+T
3142	1	MIN-MY BEAM ULS Q+F+T
3143	1	MAX-VZ BEAM ULS Q+F+T
3144	1	MIN-VZ BEAM ULS Q+F+T
3145	1	MAX-N BEAM ULS Q+F+T
3146	1	MIN-N BEAM ULS Q+F+T
3147	1	MAX-P SPRI ULS Q+F+T
3148	1	MIN-P SPRI ULS Q+F+T
3149	1	MAX-UZ NODE ULS Q+F+T
3150	1	MIN-UZ NODE ULS Q+F+T

SOFiSTiK AG - www.sofistik.de

```
Composite bridge 38+50+38, b=14.25m, 2x2HL1100R HISTAR460 , slab 0.30m C30/37
Combination DESI: Q+F+T

+++++ warning no.    34 in program MUEB
 Element type BEAM Loadcase 2107, does not contribute anything to superposition
+++++ warning no.    34 in program MUEB
 Element type BEAM Loadcase 2108, does not contribute anything to superposition
+++++ warning no.    34 in program MUEB
 Element type BEAM Loadcase 2109, does not contribute anything to superposition
+++++ warning no.    34 in program MUEB
 Element type BEAM Loadcase 2110, does not contribute anything to superposition
+++++ warning no.    34 in program MUEB
 Element type BEAM Loadcase 2607, does not contribute anything to superposition
+++++ warning no.    34 in program MUEB
 Element type BEAM Loadcase 2608, does not contribute anything to superposition
+++++ warning no.    34 in program MUEB
 Element type BEAM Loadcase 2609, does not contribute anything to superposition
+++++ warning no.    34 in program MUEB
 Element type BEAM Loadcase 2610, does not contribute anything to superposition
+++++ warning no.    34 in program MUEB
 Element type BEAM Loadcase 2707, does not contribute anything to superposition
+++++ warning no.    34 in program MUEB
 Element type BEAM Loadcase 2708, does not contribute anything to superposition
+++++ warning no.    34 in program MUEB
 Element type BEAM Loadcase 2709, does not contribute anything to superposition
+++++ warning no.    34 in program MUEB
 Element type BEAM Loadcase 2710, does not contribute anything to superposition
+++++ warning no.    34 in program MUEB
 Element type SPRI Loadcase 2101, does not contribute anything to superposition
+++++ warning no.    34 in program MUEB
 Element type SPRI Loadcase 2102, does not contribute anything to superposition
+++++ warning no.    34 in program MUEB
 Element type SPRI Loadcase 2103, does not contribute anything to superposition
+++++ warning no.    34 in program MUEB
 Element type SPRI Loadcase 2104, does not contribute anything to superposition
+++++ warning no.    34 in program MUEB
 Element type SPRI Loadcase 2105, does not contribute anything to superposition
+++++ warning no.    34 in program MUEB
 Element type SPRI Loadcase 2106, does not contribute anything to superposition
+++++ warning no.    34 in program MUEB
 Element type SPRI Loadcase 2109, does not contribute anything to superposition
+++++ warning no.    34 in program MUEB
 Element type SPRI Loadcase 2110, does not contribute anything to superposition
+++++ warning no.    34 in program MUEB
 Element type SPRI Loadcase 2601, does not contribute anything to superposition
+++++ warning no.    34 in program MUEB
 Element type SPRI Loadcase 2602, does not contribute anything to superposition
+++++ warning no.    34 in program MUEB
 Element type SPRI Loadcase 2603, does not contribute anything to superposition
+++++ warning no.    34 in program MUEB
 Element type SPRI Loadcase 2604, does not contribute anything to superposition
+++++ warning no.    34 in program MUEB
 Element type SPRI Loadcase 2605, does not contribute anything to superposition
+++++ warning no.    34 in program MUEB
 Element type SPRI Loadcase 2606, does not contribute anything to superposition
+++++ warning no.    34 in program MUEB
 Element type SPRI Loadcase 2609, does not contribute anything to superposition
+++++ warning no.    34 in program MUEB
 Element type SPRI Loadcase 2610, does not contribute anything to superposition
+++++ warning no.    34 in program MUEB
 Element type SPRI Loadcase 2701, does not contribute anything to superposition
+++++ warning no.    34 in program MUEB
 Element type SPRI Loadcase 2702, does not contribute anything to superposition
+++++ warning no.    34 in program MUEB
 Element type SPRI Loadcase 2703, does not contribute anything to superposition
+++++ warning no.    34 in program MUEB
 Element type SPRI Loadcase 2704, does not contribute anything to superposition
+++++ warning no.    34 in program MUEB
 Element type SPRI Loadcase 2705, does not contribute anything to superposition
```

SOFiSTiK AG - www.sofistik.de

```
Composite bridge 38+50+38, b=14.25m, 2x2HL1100R HISTAR460 , slab 0.30m C30/37
Combination DESI: Q+F+T

+++++ warning no.    34 in program MUEB
 Element type SPRI Loadcase 2706, does not contribute anything to superposition
+++++ warning no.    34 in program MUEB
 Element type SPRI Loadcase 2709, does not contribute anything to superposition
+++++ warning no.    34 in program MUEB
 Element type SPRI Loadcase 2710, does not contribute anything to superposition
+++++ warning no.    34 in program MUEB
 Element type NODE Loadcase 2101, does not contribute anything to superposition
+++++ warning no.    34 in program MUEB
 Element type NODE Loadcase 2102, does not contribute anything to superposition
+++++ warning no.    34 in program MUEB
 Element type NODE Loadcase 2103, does not contribute anything to superposition
+++++ warning no.    34 in program MUEB
 Element type NODE Loadcase 2104, does not contribute anything to superposition
+++++ warning no.    34 in program MUEB
 Element type NODE Loadcase 2105, does not contribute anything to superposition
+++++ warning no.    34 in program MUEB
 Element type NODE Loadcase 2106, does not contribute anything to superposition
+++++ warning no.    34 in program MUEB
 Element type NODE Loadcase 2107, does not contribute anything to superposition
+++++ warning no.    34 in program MUEB
 Element type NODE Loadcase 2108, does not contribute anything to superposition
+++++ warning no.    34 in program MUEB
 Element type NODE Loadcase 2601, does not contribute anything to superposition
+++++ warning no.    34 in program MUEB
 Element type NODE Loadcase 2602, does not contribute anything to superposition
+++++ warning no.    34 in program MUEB
 Element type NODE Loadcase 2603, does not contribute anything to superposition
+++++ warning no.    34 in program MUEB
 Element type NODE Loadcase 2604, does not contribute anything to superposition
+++++ warning no.    34 in program MUEB
 Element type NODE Loadcase 2605, does not contribute anything to superposition
+++++ warning no.    34 in program MUEB
 Element type NODE Loadcase 2606, does not contribute anything to superposition
+++++ warning no. 10989 in program MUEB
Warning    34 has been issued    50 times, further printing will be supressed
```

SOFiSTiK AG - www.sofistik.de

Composite bridge 38+50+38, b=14.25m, 2x2HL1100R HISTAR460 , slab 0.30m C30/37
Combination RARE: SLS-total sum

Superposition according to EuroNorm 1994 (2004) Composite Structures

Combination rule Number 1
Service: Rare combination
Superposition according to manual MAXIMA formula 4

$$E_{d,rare} = E\left\{\sum_{j\geq 1} G_{k,j} \oplus P_k \oplus Q_{k,1} \oplus \sum_{i>1} \psi_{0,i} \cdot Q_{k,i}\right\}$$

Resulting loadcases type Service: Rare combination

Loadcase selection and Actions

Act	type	γ-u	γ-f	γ-a	ψ-0	ψ-1	ψ-2	ψ-1'	Title
C_2	P	1.35	0.00	1.00	1.00	1.00	1.00	1.00	C+S
2022	1.00	Conditional LC				MAX-MY BEAM Part precomb			
C_1	P	1.35	1.00	1.00	1.00	1.00	1.00	1.00	C+S
2021	1.00	permanent load grouped in actions						MAX-MY BEAM Part precomb	
F_1	Q	1.20	0.00	1.00	1.00	1.00	1.00	1.00	settlements
2601	1.00	Exclusive LC		A 7		MAX-MY BEAM Precombinati			
2602	1.00	Exclusive LC		A 7		MIN-MY BEAM Precombinati			
2603	1.00	Exclusive LC		A 7		MAX-VZ BEAM Precombinati			
2604	1.00	Exclusive LC		A 7		MIN-VZ BEAM Precombinati			
2605	1.00	Exclusive LC		A 7		MAX-N BEAM Precombinatio			
2606	1.00	Exclusive LC		A 7		MIN-N BEAM Precombinatio			
2607	1.00	Exclusive LC		A 7		MAX-P SPRI Precombinatio			
2608	1.00	Exclusive LC		A 7		MIN-P SPRI Precombinatio			
2609	1.00	Exclusive LC		A 7		MAX-UZ NODE Precombinati			
2610	1.00	Exclusive LC		A 7		MIN-UZ NODE Precombinati			
G_2	G	1.35	1.00	1.00	1.00	1.00	1.00	1.00	gn
2002	1.00	permanent load grouped in actions						MAX-MY BEAM Part precomb	
G_1	G	1.35	1.00	1.00	1.00	1.00	1.00	1.00	gk
2001	1.00	permanent load grouped in actions						MAX-MY BEAM Part precomb	
Q	Q	1.50	0.00	1.00	0.75	0.75	0.20	0.80	gr1a EN
2101	1.00	Exclusive LC		A 5		MAX-MY BEAM Precombinati			
2102	1.00	Exclusive LC		A 5		MIN-MY BEAM Precombinati			
2103	1.00	Exclusive LC		A 5		MAX-VZ BEAM Precombinati			
2104	1.00	Exclusive LC		A 5		MIN-VZ BEAM Precombinati			
2105	1.00	Exclusive LC		A 5		MAX-N BEAM Precombinatio			
2106	1.00	Exclusive LC		A 5		MIN-N BEAM Precombinatio			
2107	1.00	Exclusive LC		A 5		MAX-P SPRI Precombinatio			
2108	1.00	Exclusive LC		A 5		MIN-P SPRI Precombinatio			
2109	1.00	Exclusive LC		A 5		MAX-UZ NODE Precombinati			
2110	1.00	Exclusive LC		A 5		MIN-UZ NODE Precombinati			
T_1	Q	1.50	0.00	1.00	0.60	0.60	0.50	1.00	temp
2701	1.00	Exclusive LC		A 8		MAX-MY BEAM Precombinati			
2702	1.00	Exclusive LC		A 8		MIN-MY BEAM Precombinati			
2703	1.00	Exclusive LC		A 8		MAX-VZ BEAM Precombinati			
2704	1.00	Exclusive LC		A 8		MIN-VZ BEAM Precombinati			
2705	1.00	Exclusive LC		A 8		MAX-N BEAM Precombinatio			
2706	1.00	Exclusive LC		A 8		MIN-N BEAM Precombinatio			
2707	1.00	Exclusive LC		A 8		MAX-P SPRI Precombinatio			
2708	1.00	Exclusive LC		A 8		MIN-P SPRI Precombinatio			
2709	1.00	Exclusive LC		A 8		MAX-UZ NODE Precombinati			
2710	1.00	Exclusive LC		A 8		MIN-UZ NODE Precombinati			

Generated Loadcases

Number	Comb	Title
3201	1	MAXR-MY BEAM SLSsuma
3202	1	MINR-MY BEAM SLSsuma
3203	1	MAXR-VZ BEAM SLSsuma
3204	1	MINR-VZ BEAM SLSsuma

SOFiSTiK AG - www.sofistik.de

```
Composite bridge 38+50+38, b=14.25m, 2x2HL1100R HISTAR460 , slab 0.30m C30/37
Combination RARE: SLS-total sum
```

Generated Loadcases
Number Comb Title

```
  3205    1 MAXR-N BEAM SLSsuma
  3206    1 MINR-N BEAM SLSsuma
  3207    1 MAXR-P SPRI SLSsuma
  3208    1 MINR-P SPRI SLSsuma
  3209    1 MAXR-UZ NODE SLSsuma
  3210    1 MINR-UZ NODE SLSsuma
+++++ warning no.    34 in program MUEB
 Element type BEAM Loadcase 2107, does not contribute anything to superposition
+++++ warning no.    34 in program MUEB
 Element type BEAM Loadcase 2108, does not contribute anything to superposition
+++++ warning no.    34 in program MUEB
 Element type BEAM Loadcase 2109, does not contribute anything to superposition
+++++ warning no.    34 in program MUEB
 Element type BEAM Loadcase 2110, does not contribute anything to superposition
+++++ warning no.    34 in program MUEB
 Element type BEAM Loadcase 2607, does not contribute anything to superposition
+++++ warning no.    34 in program MUEB
 Element type BEAM Loadcase 2608, does not contribute anything to superposition
+++++ warning no.    34 in program MUEB
 Element type BEAM Loadcase 2609, does not contribute anything to superposition
+++++ warning no.    34 in program MUEB
 Element type BEAM Loadcase 2610, does not contribute anything to superposition
+++++ warning no.    34 in program MUEB
 Element type BEAM Loadcase 2707, does not contribute anything to superposition
+++++ warning no.    34 in program MUEB
 Element type BEAM Loadcase 2708, does not contribute anything to superposition
+++++ warning no.    34 in program MUEB
 Element type BEAM Loadcase 2709, does not contribute anything to superposition
+++++ warning no.    34 in program MUEB
 Element type BEAM Loadcase 2710, does not contribute anything to superposition
+++++ warning no.    34 in program MUEB
 Element type SPRI Loadcase 2101, does not contribute anything to superposition
+++++ warning no.    34 in program MUEB
 Element type SPRI Loadcase 2102, does not contribute anything to superposition
+++++ warning no.    34 in program MUEB
 Element type SPRI Loadcase 2103, does not contribute anything to superposition
+++++ warning no.    34 in program MUEB
 Element type SPRI Loadcase 2104, does not contribute anything to superposition
+++++ warning no.    34 in program MUEB
 Element type SPRI Loadcase 2105, does not contribute anything to superposition
+++++ warning no.    34 in program MUEB
 Element type SPRI Loadcase 2106, does not contribute anything to superposition
+++++ warning no.    34 in program MUEB
 Element type SPRI Loadcase 2109, does not contribute anything to superposition
+++++ warning no.    34 in program MUEB
 Element type SPRI Loadcase 2110, does not contribute anything to superposition
+++++ warning no.    34 in program MUEB
 Element type SPRI Loadcase 2601, does not contribute anything to superposition
+++++ warning no.    34 in program MUEB
 Element type SPRI Loadcase 2602, does not contribute anything to superposition
+++++ warning no.    34 in program MUEB
 Element type SPRI Loadcase 2603, does not contribute anything to superposition
+++++ warning no.    34 in program MUEB
 Element type SPRI Loadcase 2604, does not contribute anything to superposition
+++++ warning no.    34 in program MUEB
 Element type SPRI Loadcase 2605, does not contribute anything to superposition
+++++ warning no.    34 in program MUEB
 Element type SPRI Loadcase 2606, does not contribute anything to superposition
+++++ warning no.    34 in program MUEB
 Element type SPRI Loadcase 2609, does not contribute anything to superposition
+++++ warning no.    34 in program MUEB
 Element type SPRI Loadcase 2610, does not contribute anything to superposition
+++++ warning no.    34 in program MUEB
 Element type SPRI Loadcase 2701, does not contribute anything to superposition
```

SOFiSTiK AG - www.sofistik.de

```
Composite bridge 38+50+38, b=14.25m, 2x2HL1100R HISTAR460 , slab 0.30m C30/37
Combination RARE: SLS-total sum

+++++ warning no.    34 in program MUEB
 Element type SPRI Loadcase 2702, does not contribute anything to superposition
+++++ warning no.    34 in program MUEB
 Element type SPRI Loadcase 2703, does not contribute anything to superposition
+++++ warning no.    34 in program MUEB
 Element type SPRI Loadcase 2704, does not contribute anything to superposition
+++++ warning no.    34 in program MUEB
 Element type SPRI Loadcase 2705, does not contribute anything to superposition
+++++ warning no.    34 in program MUEB
 Element type SPRI Loadcase 2706, does not contribute anything to superposition
+++++ warning no.    34 in program MUEB
 Element type SPRI Loadcase 2709, does not contribute anything to superposition
+++++ warning no.    34 in program MUEB
 Element type SPRI Loadcase 2710, does not contribute anything to superposition
+++++ warning no.    34 in program MUEB
 Element type NODE Loadcase 2101, does not contribute anything to superposition
+++++ warning no.    34 in program MUEB
 Element type NODE Loadcase 2102, does not contribute anything to superposition
+++++ warning no.    34 in program MUEB
 Element type NODE Loadcase 2103, does not contribute anything to superposition
+++++ warning no.    34 in program MUEB
 Element type NODE Loadcase 2104, does not contribute anything to superposition
+++++ warning no.    34 in program MUEB
 Element type NODE Loadcase 2105, does not contribute anything to superposition
+++++ warning no.    34 in program MUEB
 Element type NODE Loadcase 2106, does not contribute anything to superposition
+++++ warning no.    34 in program MUEB
 Element type NODE Loadcase 2107, does not contribute anything to superposition
+++++ warning no.    34 in program MUEB
 Element type NODE Loadcase 2108, does not contribute anything to superposition
+++++ warning no.    34 in program MUEB
 Element type NODE Loadcase 2601, does not contribute anything to superposition
+++++ warning no.    34 in program MUEB
 Element type NODE Loadcase 2602, does not contribute anything to superposition
+++++ warning no.    34 in program MUEB
 Element type NODE Loadcase 2603, does not contribute anything to superposition
+++++ warning no.    34 in program MUEB
 Element type NODE Loadcase 2604, does not contribute anything to superposition
+++++ warning no.    34 in program MUEB
 Element type NODE Loadcase 2605, does not contribute anything to superposition
+++++ warning no.    34 in program MUEB
 Element type NODE Loadcase 2606, does not contribute anything to superposition
+++++ warning no. 10989 in program MUEB
Warning    34 has been issued    50 times, further printing will be supressed
```

SOFiSTiK AG - www.sofistik.de

Composite bridge 38+50+38, b=14.25m, 2x2HL1100R HISTAR460 , slab 0.30m C30/37
Combination RARE: SLS G+C

Superposition according to EuroNorm 1994 (2004) Composite Structures

Combination rule Number 1
Service: Rare combination
Superposition according to manual MAXIMA formula 4

$$E_{d,rare} = E\left\{\sum_{j\geq 1} G_{k,j} \oplus P_k \oplus Q_{k,1} \oplus \sum_{i>1} \psi_{0,i} \cdot Q_{k,i}\right\}$$

Resulting loadcases type Service: Rare combination

Loadcase selection and Actions

Act	type	γ-u	γ-f	γ-a	ψ-0	ψ-1	ψ-2	ψ-1'	Title
C_1	P	1.35	1.00	1.00	1.00	1.00	1.00	1.00	C+S
2021	1.00 permanent load grouped in actions								MAX-MY BEAM Part precomb
C_2	P	1.35	0.00	1.00	1.00	1.00	1.00	1.00	C+S
2022	1.00 Conditional LC					MAX-MY BEAM Part precomb			
G_1	G	1.35	1.00	1.00	1.00	1.00	1.00	1.00	gk
2001	1.00 permanent load grouped in actions								MAX-MY BEAM Part precomb
G_2	G	1.35	1.00	1.00	1.00	1.00	1.00	1.00	gn
2002	1.00 permanent load grouped in actions								MAX-MY BEAM Part precomb

Generated Loadcases

Number	Comb	Title
3211	1	MAXR-MY BEAM SLS G+C
3212	1	MINR-MY BEAM SLS G+C
3213	1	MAXR-VZ BEAM SLS G+C
3214	1	MINR-VZ BEAM SLS G+C
3215	1	MAXR-N BEAM SLS G+C
3216	1	MINR-N BEAM SLS G+C
3217	1	MAXR-P SPRI SLS G+C
3218	1	MINR-P SPRI SLS G+C
3219	1	MAXR-UZ NODE SLS G+C
3220	1	MINR-UZ NODE SLS G+C

SOFiSTiK AG - www.sofistik.de

Composite bridge 38+50+38, b=14.25m, 2x2HL1100R HISTAR460 , slab 0.30m C30/37
Combination RARE: Q+F+T

Superposition according to EuroNorm 1994 (2004) Composite Structures

Combination rule Number 1
Service: Rare combination
Superposition according to manual MAXIMA formula 4

$$E_{d,rare} = E\left\{\sum_{j\geq 1} G_{k,j} \oplus P_k \oplus Q_{k,1} \oplus \sum_{i>1} \psi_{0,i} \cdot Q_{k,i}\right\}$$

Resulting loadcases type Service: Rare combination

Loadcase selection and Actions

Act	type	γ-u	γ-f	γ-a	ψ-0	ψ-1	ψ-2	ψ-1'	
	LC factor	Type of loadcase							Title
F_1	Q	1.20	0.00	1.00	1.00	1.00	1.00	1.00	settlements
2601	1.00	Exclusive LC	A 7						MAX-MY BEAM Precombinati
2602	1.00	Exclusive LC	A 7						MIN-MY BEAM Precombinati
2603	1.00	Exclusive LC	A 7						MAX-VZ BEAM Precombinati
2604	1.00	Exclusive LC	A 7						MIN-VZ BEAM Precombinati
2605	1.00	Exclusive LC	A 7						MAX-N BEAM Precombinatio
2606	1.00	Exclusive LC	A 7						MIN-N BEAM Precombinatio
2607	1.00	Exclusive LC	A 7						MAX-P SPRI Precombinatio
2608	1.00	Exclusive LC	A 7						MIN-P SPRI Precombinatio
2609	1.00	Exclusive LC	A 7						MAX-UZ NODE Precombinati
2610	1.00	Exclusive LC	A 7						MIN-UZ NODE Precombinati
Q	Q	1.50	0.00	1.00	0.75	0.75	0.20	0.80	gr1a EN
2101	1.00	Exclusive LC	A 5						MAX-MY BEAM Precombinati
2102	1.00	Exclusive LC	A 5						MIN-MY BEAM Precombinati
2103	1.00	Exclusive LC	A 5						MAX-VZ BEAM Precombinati
2104	1.00	Exclusive LC	A 5						MIN-VZ BEAM Precombinati
2105	1.00	Exclusive LC	A 5						MAX-N BEAM Precombinatio
2106	1.00	Exclusive LC	A 5						MIN-N BEAM Precombinatio
2107	1.00	Exclusive LC	A 5						MAX-P SPRI Precombinatio
2108	1.00	Exclusive LC	A 5						MIN-P SPRI Precombinatio
2109	1.00	Exclusive LC	A 5						MAX-UZ NODE Precombinati
2110	1.00	Exclusive LC	A 5						MIN-UZ NODE Precombinati
T_1	Q	1.50	0.00	1.00	0.60	0.60	0.50	1.00	temp
2701	1.00	Exclusive LC	A 8						MAX-MY BEAM Precombinati
2702	1.00	Exclusive LC	A 8						MIN-MY BEAM Precombinati
2703	1.00	Exclusive LC	A 8						MAX-VZ BEAM Precombinati
2704	1.00	Exclusive LC	A 8						MIN-VZ BEAM Precombinati
2705	1.00	Exclusive LC	A 8						MAX-N BEAM Precombinatio
2706	1.00	Exclusive LC	A 8						MIN-N BEAM Precombinatio
2707	1.00	Exclusive LC	A 8						MAX-P SPRI Precombinatio
2708	1.00	Exclusive LC	A 8						MIN-P SPRI Precombinatio
2709	1.00	Exclusive LC	A 8						MAX-UZ NODE Precombinati
2710	1.00	Exclusive LC	A 8						MIN-UZ NODE Precombinati

Generated Loadcases

Number	Comb	Title
3241	1	MAXR-MY BEAM SLS Q+F+T
3242	1	MINR-MY BEAM SLS Q+F+T
3243	1	MAXR-VZ BEAM SLS Q+F+T
3244	1	MINR-VZ BEAM SLS Q+F+T
3245	1	MAXR-N BEAM SLS Q+F+T
3246	1	MINR-N BEAM SLS Q+F+T
3247	1	MAXR-P SPRI SLS Q+F+T
3248	1	MINR-P SPRI SLS Q+F+T
3249	1	MAXR-UZ NODE SLS Q+F+T
3250	1	MINR-UZ NODE SLS Q+F+T

+++++ warning no. 34 in program MUEB
Element type BEAM Loadcase 2107, does not contribute anything to superposition

SOFiSTiK AG - www.sofistik.de

```
Composite bridge 38+50+38, b=14.25m, 2x2HL1100R HISTAR460 , slab 0.30m C30/37
Combination RARE: Q+F+T

+++++ warning no.    34 in program MUEB
 Element type BEAM Loadcase 2108, does not contribute anything to superposition
+++++ warning no.    34 in program MUEB
 Element type BEAM Loadcase 2109, does not contribute anything to superposition
+++++ warning no.    34 in program MUEB
 Element type BEAM Loadcase 2110, does not contribute anything to superposition
+++++ warning no.    34 in program MUEB
 Element type BEAM Loadcase 2607, does not contribute anything to superposition
+++++ warning no.    34 in program MUEB
 Element type BEAM Loadcase 2608, does not contribute anything to superposition
+++++ warning no.    34 in program MUEB
 Element type BEAM Loadcase 2609, does not contribute anything to superposition
+++++ warning no.    34 in program MUEB
 Element type BEAM Loadcase 2610, does not contribute anything to superposition
+++++ warning no.    34 in program MUEB
 Element type BEAM Loadcase 2707, does not contribute anything to superposition
+++++ warning no.    34 in program MUEB
 Element type BEAM Loadcase 2708, does not contribute anything to superposition
+++++ warning no.    34 in program MUEB
 Element type BEAM Loadcase 2709, does not contribute anything to superposition
+++++ warning no.    34 in program MUEB
 Element type BEAM Loadcase 2710, does not contribute anything to superposition
+++++ warning no.    34 in program MUEB
 Element type SPRI Loadcase 2101, does not contribute anything to superposition
+++++ warning no.    34 in program MUEB
 Element type SPRI Loadcase 2102, does not contribute anything to superposition
+++++ warning no.    34 in program MUEB
 Element type SPRI Loadcase 2103, does not contribute anything to superposition
+++++ warning no.    34 in program MUEB
 Element type SPRI Loadcase 2104, does not contribute anything to superposition
+++++ warning no.    34 in program MUEB
 Element type SPRI Loadcase 2105, does not contribute anything to superposition
+++++ warning no.    34 in program MUEB
 Element type SPRI Loadcase 2106, does not contribute anything to superposition
+++++ warning no.    34 in program MUEB
 Element type SPRI Loadcase 2109, does not contribute anything to superposition
+++++ warning no.    34 in program MUEB
 Element type SPRI Loadcase 2110, does not contribute anything to superposition
+++++ warning no.    34 in program MUEB
 Element type SPRI Loadcase 2601, does not contribute anything to superposition
+++++ warning no.    34 in program MUEB
 Element type SPRI Loadcase 2602, does not contribute anything to superposition
+++++ warning no.    34 in program MUEB
 Element type SPRI Loadcase 2603, does not contribute anything to superposition
+++++ warning no.    34 in program MUEB
 Element type SPRI Loadcase 2604, does not contribute anything to superposition
+++++ warning no.    34 in program MUEB
 Element type SPRI Loadcase 2605, does not contribute anything to superposition
+++++ warning no.    34 in program MUEB
 Element type SPRI Loadcase 2606, does not contribute anything to superposition
+++++ warning no.    34 in program MUEB
 Element type SPRI Loadcase 2609, does not contribute anything to superposition
+++++ warning no.    34 in program MUEB
 Element type SPRI Loadcase 2610, does not contribute anything to superposition
+++++ warning no.    34 in program MUEB
 Element type SPRI Loadcase 2701, does not contribute anything to superposition
+++++ warning no.    34 in program MUEB
 Element type SPRI Loadcase 2702, does not contribute anything to superposition
+++++ warning no.    34 in program MUEB
 Element type SPRI Loadcase 2703, does not contribute anything to superposition
+++++ warning no.    34 in program MUEB
 Element type SPRI Loadcase 2704, does not contribute anything to superposition
+++++ warning no.    34 in program MUEB
 Element type SPRI Loadcase 2705, does not contribute anything to superposition
+++++ warning no.    34 in program MUEB
 Element type SPRI Loadcase 2706, does not contribute anything to superposition
```

SOFiSTiK AG - www.sofistik.de

```
Composite bridge 38+50+38, b=14.25m, 2x2HL1100R HISTAR460 , slab 0.30m C30/37
Combination RARE: Q+F+T

+++++ warning no.    34 in program MUEB
 Element type SPRI Loadcase 2709, does not contribute anything to superposition
+++++ warning no.    34 in program MUEB
 Element type SPRI Loadcase 2710, does not contribute anything to superposition
+++++ warning no.    34 in program MUEB
 Element type NODE Loadcase 2101, does not contribute anything to superposition
+++++ warning no.    34 in program MUEB
 Element type NODE Loadcase 2102, does not contribute anything to superposition
+++++ warning no.    34 in program MUEB
 Element type NODE Loadcase 2103, does not contribute anything to superposition
+++++ warning no.    34 in program MUEB
 Element type NODE Loadcase 2104, does not contribute anything to superposition
+++++ warning no.    34 in program MUEB
 Element type NODE Loadcase 2105, does not contribute anything to superposition
+++++ warning no.    34 in program MUEB
 Element type NODE Loadcase 2106, does not contribute anything to superposition
+++++ warning no.    34 in program MUEB
 Element type NODE Loadcase 2107, does not contribute anything to superposition
+++++ warning no.    34 in program MUEB
 Element type NODE Loadcase 2108, does not contribute anything to superposition
+++++ warning no.    34 in program MUEB
 Element type NODE Loadcase 2601, does not contribute anything to superposition
+++++ warning no.    34 in program MUEB
 Element type NODE Loadcase 2602, does not contribute anything to superposition
+++++ warning no.    34 in program MUEB
 Element type NODE Loadcase 2603, does not contribute anything to superposition
+++++ warning no.    34 in program MUEB
 Element type NODE Loadcase 2604, does not contribute anything to superposition
+++++ warning no.    34 in program MUEB
 Element type NODE Loadcase 2605, does not contribute anything to superposition
+++++ warning no.    34 in program MUEB
 Element type NODE Loadcase 2606, does not contribute anything to superposition
+++++ warning no. 10989 in program MUEB
Warning    34 has been issued    50 times, further printing will be supressed
```

SOFiSTiK AG - www.sofistik.de

Composite bridge 38+50+38, b=14.25m, 2x2HL1100R HISTAR460 , slab 0.30m C30/37
CSM Print of stresses in a cross section

Selected Beam Elements

FROM	TO	INC	X-VALUE	NC	MEMBER	CS0	CS1	CS2	CS3	CS4	CS5
510000	510024	1				1	10	20	21	30	
520000	520032	1				1	10	20	21	30	
530000	530024	1				1	10	20	21	30	
15100001	510032	1				1	10	20	21	30	
15200001	520034	1				1	10	20	21	30	
15300001	530030	1				1	10	20	21	30	
110000	110040	1									
120000	120040	1									
130000	130040	1									
140000	140040	1									
610000	610008	1				1	10	20	21	30	
620000	620012	1				1	10	20	21	30	
630000	630016	1				1	10	20	21	30	
640000	640008	1				1	10	20	21	30	
320000	320018	1									
330000	330018	1									

Default design code is EuroNorm 1994 (2004) Composite Structures (Europe) V 27.0
Structure: A (Buildings)
Snow load zone : 1

Materials

No. 1 S 355 T (EN 1993) S355
No. 2 S 355 N (EN 1993) S355
No. 3 S 355 N (EN 1993) S355
No. 10 C 30/37 (EN 1992) C1:prefab slab
No. 11 C 30/37 (EN 1992) C1:prefab slab
No. 13 C 30/37 (EN 1992) C1:prefab bott
No. 20 C 30/37 (EN 1992) C2:crossbeam
No. 21 C 30/37 (EN 1992) C2:crossbeam c
No. 22 C 30/37 (EN 1992) C2:crossbeam g
No. 23 C 30/37 (EN 1992) C2:miedzybetci
No. 24 C 30/37 (EN 1992) C2:miedzybetle
No. 25 C 30/37 (EN 1992) C2:bottom conc
No. 30 C 30/37 (EN 1992) C3:insitu slab
No. 31 C 30/37 (EN 1992) C3:insitu slab
No. 32 C 30/37 (EN 1992) C3:insitu slab
No. 40 C 30/37 (EN 1992) C4:slab transv
No. 42 C 30/37 (EN 1992) C4:slab trans.
No. 50 C 30/37 (EN 1992) C5:supports
No. 52 C 30/37 (EN 1992) C5:supports ga
No.100 B 500 B (EN 1992) R1:Bst500
No.200 B 500 B (EN 1992) R2:Bst500
No.210 B 500 B (EN 1992) R2:Bst500
No.300 B 500 B (EN 1992) R3:Bst500
No.400 B 500 B (EN 1992) R4:Bst500
No.500 B 500 B (EN 1992) R5:Bst500

All moments will be smoothed out between face and support
Reinforcement will be accounted for sectional values as defined in AQUA
Reinforcements saved as design case LCR 1

Considered Load Cases

No.	refer	act	on	Title/type of load case	gam-u	gam-f	ψ-0	ψ-1	ψ-2	ψ-1'	
2101	part.	CS	4	MAX-MY BEAM Precombinati	1.50	0.00	0.75	0.75	0.20	0.80	ex
				Q_1 (gr1a vertical EN)							
2102	part.	CS	4	MIN-MY BEAM Precombinati	1.50	0.00	0.75	0.75	0.20	0.80	ex
				Q_1 (gr1a vertical EN)							
2103	part.	CS	4	MAX-VZ BEAM Precombinati	1.50	0.00	0.75	0.75	0.20	0.80	ex
				Q_1 (gr1a vertical EN)							
2104	part.	CS	4	MIN-VZ BEAM Precombinati	1.50	0.00	0.75	0.75	0.20	0.80	ex
				Q_1 (gr1a vertical EN)							
2105	part.	CS	4	MAX-N BEAM Precombinatio	1.50	0.00	0.75	0.75	0.20	0.80	ex
				Q_1 (gr1a vertical EN)							

SOFiSTiK AG - www.sofistik.de

Composite bridge 38+50+38, b=14.25m, 2x2HL1100R HISTAR460 , slab 0.30m C30/37
CSM Print of stresses in a cross section

Considered Load Cases

No.	refer	act	on	Title/type of load case	gam-u	gam-f	ψ-0	ψ-1	ψ-2	ψ-1'	
2106	part.	CS	4	MIN-N BEAM Precombinatio Q_1 (gr1a vertical EN)	1.50	0.00	0.75	0.75	0.20	0.80	ex
2601	part.	CS	4	MAX-MY BEAM Precombinati F_1 (settlements)	1.20	0.00	1.00	1.00	1.00	1.00	ex
2602	part.	CS	4	MIN-MY BEAM Precombinati F_1 (settlements)	1.20	0.00	1.00	1.00	1.00	1.00	ex
2603	part.	CS	4	MAX-VZ BEAM Precombinati F_1 (settlements)	1.20	0.00	1.00	1.00	1.00	1.00	ex
2604	part.	CS	4	MIN-VZ BEAM Precombinati F_1 (settlements)	1.20	0.00	1.00	1.00	1.00	1.00	ex
2605	part.	CS	4	MAX-N BEAM Precombinatio F_1 (settlements)	1.20	0.00	1.00	1.00	1.00	1.00	ex
2606	part.	CS	4	MIN-N BEAM Precombinatio F_1 (settlements)	1.20	0.00	1.00	1.00	1.00	1.00	ex
2701	part.	CS	4	MAX-MY BEAM Precombinati T_1 (temp)	1.50	0.00	0.60	0.60	0.50	1.00	ex
2702	part.	CS	4	MIN-MY BEAM Precombinati T_1 (temp)	1.50	0.00	0.60	0.60	0.50	1.00	ex
2703	part.	CS	4	MAX-VZ BEAM Precombinati T_1 (temp)	1.50	0.00	0.60	0.60	0.50	1.00	ex
2704	part.	CS	4	MIN-VZ BEAM Precombinati T_1 (temp)	1.50	0.00	0.60	0.60	0.50	1.00	ex
2705	part.	CS	4	MAX-N BEAM Precombinatio T_1 (temp)	1.50	0.00	0.60	0.60	0.50	1.00	ex
2706	part.	CS	4	MIN-N BEAM Precombinatio T_1 (temp)	1.50	0.00	0.60	0.60	0.50	1.00	ex
3141	part.	CS	4	MAX-MY BEAM ULS Q+F+T D	1.00	0.00	0.00	0.00	0.00	0.00	ex
3142	part.	CS	4	MIN-MY BEAM ULS Q+F+T D	1.00	0.00	0.00	0.00	0.00	0.00	ex
3143	part.	CS	4	MAX-VZ BEAM ULS Q+F+T D	1.00	0.00	0.00	0.00	0.00	0.00	ex
3144	part.	CS	4	MIN-VZ BEAM ULS Q+F+T D	1.00	0.00	0.00	0.00	0.00	0.00	ex
3145	part.	CS	4	MAX-N BEAM ULS Q+F+T D	1.00	0.00	0.00	0.00	0.00	0.00	ex
3146	part.	CS	4	MIN-N BEAM ULS Q+F+T D	1.00	0.00	0.00	0.00	0.00	0.00	ex
3241	part.	CS	4	MAXR-MY BEAM SLS Q+F+T R (earth pressure)	1.00	0.00	1.00	1.00	0.00	1.00	ex
3242	part.	CS	4	MINR-MY BEAM SLS Q+F+T R (earth pressure)	1.00	0.00	1.00	1.00	0.00	1.00	ex
3243	part.	CS	4	MAXR-VZ BEAM SLS Q+F+T R (earth pressure)	1.00	0.00	1.00	1.00	0.00	1.00	ex
3244	part.	CS	4	MINR-VZ BEAM SLS Q+F+T R (earth pressure)	1.00	0.00	1.00	1.00	0.00	1.00	ex
3245	part.	CS	4	MAXR-N BEAM SLS Q+F+T R (earth pressure)	1.00	0.00	1.00	1.00	0.00	1.00	ex
3246	part.	CS	4	MINR-N BEAM SLS Q+F+T R (earth pressure)	1.00	0.00	1.00	1.00	0.00	1.00	ex
5003	part.	CS	0	supports G_1 (gk)	1.35	1.00	1.00	1.00	1.00	1.00	pe
5005	part.	CS	0	C+S supports 28days C_1 (C+S)	1.35	1.00	1.00	1.00	1.00	1.00	pe
5010	part.	CS	1	Steel structure G_1 (gk)	1.35	1.00	1.00	1.00	1.00	1.00	pe
5015	part.	CS	1	C+S 28days C_1 (C+S)	1.35	1.00	1.00	1.00	1.00	1.00	pe
5020	part.	CS	2	scaffoldings+bottom conc G_1 (gk)	1.35	1.00	1.00	1.00	1.00	1.00	pe
5021	part.	CS	3	stiffnes of bottom concr G_1 (gk)	1.35	1.00	1.00	1.00	1.00	1.00	pe
5025	part.	CS	3	C+S bottom concrete 28da C_1 (C+S)	1.35	1.00	1.00	1.00	1.00	1.00	pe

SOFiSTiK AG - www.sofistik.de

Composite bridge 38+50+38, b=14.25m, 2x2HL1100R HISTAR460 , slab 0.30m C30/37
CSM Print of stresses in a cross section

Considered Load Cases

No.	refer	act	on	Title/type of load case	gam-u	gam-f	ψ-0	ψ-1	ψ-2	ψ-1'	
5026	part.	CS	3	zero step for consistenc G_1 (gk)	1.35	1.00	1.00	1.00	1.00	1.00	pe
5027	part.	CS	3	weight of insitu wet con G_1 (gk)	1.35	1.00	1.00	1.00	1.00	1.00	pe
5030	part.	CS	4	scaffoldings removed G_1 (gk)	1.35	1.00	1.00	1.00	1.00	1.00	pe
5035	part.	CS	4	C+S til opening 56days C_1 (C+S)	1.35	1.00	1.00	1.00	1.00	1.00	pe
5040	part.	CS	4	superimposed dead loads G_2 (gn)	1.35	1.00	1.00	1.00	1.00	1.00	pe
5045	part.	CS	4	C+S infinity C_2 (C+S)	1.35	0.00	1.00	1.00	1.00	1.00	pe
5046	part.	CS	4	C+S infinity C_2 (C+S)	1.35	0.00	1.00	1.00	1.00	1.00	pe
5047	part.	CS	4	C+S infinity C_2 (C+S)	1.35	0.00	1.00	1.00	1.00	1.00	pe
5048	part.	CS	4	C+S infinity C_2 (C+S)	1.35	0.00	1.00	1.00	1.00	1.00	pe
5049	part.	CS	4	C+S infinity C_2 (C+S)	1.35	0.00	1.00	1.00	1.00	1.00	pe
6005	part.	CS	0	05 C+S supports 28days C_1 (C+S)							pe
6015	part.	CS	1	15 C+S 28days C_1 (C+S)							pe
6025	part.	CS	3	25 C+S bottom concrete 2 C_1 (C+S)							pe
6035	part.	CS	4	35 C+S til opening 56day C_1 (C+S)							pe
6045	part.	CS	4	45 C+S infinity C_2 (C+S)							pe
6046	part.	CS	4	46 C+S infinity C_2 (C+S)							pe
6047	part.	CS	4	47 C+S infinity C_2 (C+S)							pe
6048	part.	CS	4	48 C+S infinity C_2 (C+S)							pe
6049	part.	CS	4	49 C+S infinity C_2 (C+S)							pe

Combinations For Stress Design

```
 7103 Solo_03 abutments
       SOLO  : 1.00 * LC5003
 7105 Solo_05 Creep0 abutments
       SUM   : 1.00 * LC5005 + 1.00 * LC6005
 7110 Solo_10 g Precast
       SOLO  : 1.00 * LC5010
 7115 Solo_15 Creep1 Precast
       SUM   : 1.00 * LC5015 + 1.00 * LC6015
 7120 Solo_20 g Precast+miedzy
       SOLO  : 1.00 * LC5020
 7121 Solo_21 g crosbeams acit
       SOLO  : 1.00 * LC5021
 7125 Solo_25 Creep2 Crossb
       SUM   : 1.00 * LC5025 + 1.00 * LC6025
 7126 Solo_26 Supports removed
       SOLO  : 1.00 * LC5026
 7127 Solo_27 insitu conc
       SOLO  : 1.00 * LC5027
 7130 Solo_30 Final stage
       SOLO  : 1.00 * LC5030
 7135 Solo_35 C+S til opening
       SUM   : 1.00 * LC5035 + 1.00 * LC6035
 7140 Solo_40 gn
       SOLO  : 1.00 * LC5040
```

SOFiSTiK AG - www.sofistik.de

Composite bridge 38+50+38, b=14.25m, 2x2HL1100R HISTAR460 , slab 0.30m C30/37
CSM Print of stresses in a cross section

Combinations For Stress Design

```
 7145 Solo_45 C+S infinity
       SUM   : 1.00 * LC5045 + 1.00 * LC6045
 7146 Solo_46 C+S infinity
       SUM   : 1.00 * LC5046 + 1.00 * LC6046
 7147 Solo_47 C+S infinity
       SUM   : 1.00 * LC5047 + 1.00 * LC6047
 7148 Solo_48 C+S infinity
       SUM   : 1.00 * LC5048 + 1.00 * LC6048
 7149 Solo_49 C+S infinity
       SUM   : 1.00 * LC5049 + 1.00 * LC6049
  C18 ********************
       SUM   : 0.00 * LC5003
 7003 03 abutments
       SUM   : 1.00 * LC5003
 7005 05 Creep0 abutments
       SUM   : 1.00 * LC5003 + 1.00 * LC5005 + 1.00 * LC6005
 7010 10 g Precast
       SUM   : 1.00 * LC5003 + 1.00 * LC5005 + 1.00 * LC6005 + 1.00 * LC5010
 7015 15 Creep1 Precast
       SUM   : 1.00 * LC5003 + 1.00 * LC5005 + 1.00 * LC6005 + 1.00 * LC5010
               1.00 * LC5015 + 1.00 * LC6015
 7020 20 g Precast+miedzybet
       SUM   : 1.00 * LC5003 + 1.00 * LC5005 + 1.00 * LC6005 + 1.00 * LC5010
               1.00 * LC5015 + 1.00 * LC6015 + 1.00 * LC5020
 7021 21 g crosbeams acitive
       SUM   : 1.00 * LC5003 + 1.00 * LC5005 + 1.00 * LC6005 + 1.00 * LC5010
               1.00 * LC5015 + 1.00 * LC6015 + 1.00 * LC5020 + 1.00 * LC5021
 7025 25 Creep2 Crossb
       SUM   : 1.00 * LC5003 + 1.00 * LC5005 + 1.00 * LC6005 + 1.00 * LC5010
               1.00 * LC5015 + 1.00 * LC6015 + 1.00 * LC5020 + 1.00 * LC5021
               1.00 * LC5025 + 1.00 * LC6025
 7026 26 Supports removed
       SUM   : 1.00 * LC5003 + 1.00 * LC5005 + 1.00 * LC6005 + 1.00 * LC5010
               1.00 * LC5015 + 1.00 * LC6015 + 1.00 * LC5020 + 1.00 * LC5021
               1.00 * LC5025 + 1.00 * LC6025 + 1.00 * LC5026
 7027 27 insitu conc
       SUM   : 1.00 * LC5003 + 1.00 * LC5005 + 1.00 * LC6005 + 1.00 * LC5010
               1.00 * LC5015 + 1.00 * LC6015 + 1.00 * LC5020 + 1.00 * LC5021
               1.00 * LC5025 + 1.00 * LC6025 + 1.00 * LC5026 + 1.00 * LC5027
 7030 30 Final stage
       SUM   : 1.00 * LC5003 + 1.00 * LC5005 + 1.00 * LC6005 + 1.00 * LC5010
               1.00 * LC5015 + 1.00 * LC6015 + 1.00 * LC5020 + 1.00 * LC5021
               1.00 * LC5025 + 1.00 * LC6025 + 1.00 * LC5026 + 1.00 * LC5027
               1.00 * LC5030
 7035 35 C+S til opening
       SUM   : 1.00 * LC5003 + 1.00 * LC5005 + 1.00 * LC6005 + 1.00 * LC5010
               1.00 * LC5015 + 1.00 * LC6015 + 1.00 * LC5020 + 1.00 * LC5021
               1.00 * LC5025 + 1.00 * LC6025 + 1.00 * LC5026 + 1.00 * LC5027
               1.00 * LC5030 + 1.00 * LC5035 + 1.00 * LC6035
 7040 40 gn
       SUM   : 1.00 * LC5003 + 1.00 * LC5005 + 1.00 * LC6005 + 1.00 * LC5010
               1.00 * LC5015 + 1.00 * LC6015 + 1.00 * LC5020 + 1.00 * LC5021
               1.00 * LC5025 + 1.00 * LC6025 + 1.00 * LC5026 + 1.00 * LC5027
               1.00 * LC5030 + 1.00 * LC5035 + 1.00 * LC6035 + 1.00 * LC5040
 7045 45 C+S infinity
       SUM   : 1.00 * LC5003 + 1.00 * LC5005 + 1.00 * LC6005 + 1.00 * LC5010
               1.00 * LC5015 + 1.00 * LC6015 + 1.00 * LC5020 + 1.00 * LC5021
               1.00 * LC5025 + 1.00 * LC6025 + 1.00 * LC5026 + 1.00 * LC5027
               1.00 * LC5030 + 1.00 * LC5035 + 1.00 * LC6035 + 1.00 * LC5040
               1.00 * LC5045 + 1.00 * LC6045
 7046 46 C+S infinity
```

SOFiSTiK AG - www.sofistik.de

Composite bridge 38+50+38, b=14.25m, 2x2HL1100R HISTAR460 , slab 0.30m C30/37
CSM Print of stresses in a cross section

Combinations For Stress Design

```
      SUM   : 1.00 * LC5003 + 1.00 * LC5005 + 1.00 * LC6005 + 1.00 * LC5010
              1.00 * LC5015 + 1.00 * LC6015 + 1.00 * LC5020 + 1.00 * LC5021
              1.00 * LC5025 + 1.00 * LC6025 + 1.00 * LC5026 + 1.00 * LC5027
              1.00 * LC5030 + 1.00 * LC5035 + 1.00 * LC6035 + 1.00 * LC5040
              1.00 * LC5045 + 1.00 * LC6045 + 1.00 * LC5046 + 1.00 * LC6046
 7047 47 C+S infinity
      SUM   : 1.00 * LC5003 + 1.00 * LC5005 + 1.00 * LC6005 + 1.00 * LC5010
              1.00 * LC5015 + 1.00 * LC6015 + 1.00 * LC5020 + 1.00 * LC5021
              1.00 * LC5025 + 1.00 * LC6025 + 1.00 * LC5026 + 1.00 * LC5027
              1.00 * LC5030 + 1.00 * LC5035 + 1.00 * LC6035 + 1.00 * LC5040
              1.00 * LC5045 + 1.00 * LC6045 + 1.00 * LC5046 + 1.00 * LC6046
              1.00 * LC5047 + 1.00 * LC6047
 7048 48 C+S infinity
      SUM   : 1.00 * LC5003 + 1.00 * LC5005 + 1.00 * LC6005 + 1.00 * LC5010
              1.00 * LC5015 + 1.00 * LC6015 + 1.00 * LC5020 + 1.00 * LC5021
              1.00 * LC5025 + 1.00 * LC6025 + 1.00 * LC5026 + 1.00 * LC5027
              1.00 * LC5030 + 1.00 * LC5035 + 1.00 * LC6035 + 1.00 * LC5040
              1.00 * LC5045 + 1.00 * LC6045 + 1.00 * LC5046 + 1.00 * LC6046
              1.00 * LC5047 + 1.00 * LC6047 + 1.00 * LC5048 + 1.00 * LC6048
 7049 49 C+S infinity
      SUM   : 1.00 * LC5003 + 1.00 * LC5005 + 1.00 * LC6005 + 1.00 * LC5010
              1.00 * LC5015 + 1.00 * LC6015 + 1.00 * LC5020 + 1.00 * LC5021
              1.00 * LC5025 + 1.00 * LC6025 + 1.00 * LC5026 + 1.00 * LC5027
              1.00 * LC5030 + 1.00 * LC5035 + 1.00 * LC6035 + 1.00 * LC5040
              1.00 * LC5045 + 1.00 * LC6045 + 1.00 * LC5046 + 1.00 * LC6046
              1.00 * LC5047 + 1.00 * LC6047 + 1.00 * LC5048 + 1.00 * LC6048
              1.00 * LC5049 + 1.00 * LC6049
 7301 ULS M+ with C1+C2
      MAX  +  MY   :
              1.35 * G_1 + 1.35 * C_1 + 1.35 * G_2 + 1.35 * C_2 + 1.00 * D
 7302 ULS M- with C1+C2
      MIN  +  MY   :
              1.35 * G_1 + 1.35 * C_1 + 1.35 * G_2 + 1.35 * C_2 + 1.00 * D
 7303 ULS V+ with C1+C2
      MAX  +  VZ   :
              1.35 * G_1 + 1.35 * C_1 + 1.35 * G_2 + 1.35 * C_2 + 1.00 * D
 7304 ULS V- with C1+C2
      MIN  +  VZ   :
              1.35 * G_1 + 1.35 * C_1 + 1.35 * G_2 + 1.35 * C_2 + 1.00 * D
 7306 ULS M+ with C1 only
      MAX  +  MY   :
              1.35 * G_1 + 1.35 * C_1 + 1.35 * G_2 + 1.00 * D
 7307 ULS M- with C1 only
      MIN  +  MY   :
              1.35 * G_1 + 1.35 * C_1 + 1.35 * G_2 + 1.00 * D
 7308 ULS V+ with C1 only
      MAX  +  VZ   :
              1.35 * G_1 + 1.35 * C_1 + 1.35 * G_2 + 1.00 * D
 7309 ULS V- with C1 only
      MIN  +  VZ   :
              1.35 * G_1 + 1.35 * C_1 + 1.35 * G_2 + 1.00 * D
 7311 SLS M+ with C1+C2
      MAX  +  MY   :
              1.00 * G_1 + 1.00 * C_1 + 1.00 * G_2 + 1.00 * C_2 + 1.00 * R
 7312 SLS M- with C1+C2
      MIN  +  MY   :
              1.00 * G_1 + 1.00 * C_1 + 1.00 * G_2 + 1.00 * C_2 + 1.00 * R
 7313 SLS V+ with C1+C2
      MAX  +  VZ   :
              1.00 * G_1 + 1.00 * C_1 + 1.00 * G_2 + 1.00 * C_2 + 1.00 * R
 7314 SLS V- with C1+C2
      MIN  +  VZ   :
              1.00 * G_1 + 1.00 * C_1 + 1.00 * G_2 + 1.00 * C_2 + 1.00 * R
 7316 SLS M+ with C1 only
```

SOFiSTiK AG - www.sofistik.de

Composite bridge 38+50+38, b=14.25m, 2x2HL1100R HISTAR460 , slab 0.30m C30/37
CSM Print of stresses in a cross section

Combinations For Stress Design

```
      MAX  +  MY   :
              1.00 * G_1 + 1.00 * C_1 + 1.00 * G_2 + 1.00 * R
 7317 SLS M- with C1 only
      MIN  +  MY   :
              1.00 * G_1 + 1.00 * C_1 + 1.00 * G_2 + 1.00 * R
 7318 SLS V+ with C1 only
      MAX  +  VZ   :
              1.00 * G_1 + 1.00 * C_1 + 1.00 * G_2 + 1.00 * R
 7319 SLS V- with C1 only
      MIN  +  VZ   :
              1.00 * G_1 + 1.00 * C_1 + 1.00 * G_2 + 1.00 * R
 7351 Part ULS(Q+T+F) M+
      MAX  +  MY   :
              1.00 * D
 7352 Part ULS(Q+T+F) M-
      MIN  +  MY   :
              1.00 * D
 7353 Part ULS(Q+T+F) V+
      MAX  +  VZ   :
              1.00 * D
 7354 Part ULS(Q+T+F) V-
      MIN  +  VZ   :
              1.00 * D
 7356 Part SLS(Q+T+F) M+
      MAX  +  MY   :
              1.00 * R
 7357 Part SLS(Q+T+F) M-
      MIN  +  MY   :
              1.00 * R
 7358 Part SLS(Q+T+F) V+
      MAX  +  VZ   :
              1.00 * R
 7359 Part SLS(Q+T+F) V-
      MIN  +  VZ   :
              1.00 * R
 7511 Part-precomb G_1 M+
      MAX  +  MY   :
              1.00 * G_1
 7512 Part-precomb G_1 M-
      MIN  +  MY   :
              1.00 * G_1
 7521 Part-precomb G_2 M+
      MAX  +  MY   :
              1.00 * G_2
 7522 Part-precomb G_2 M-
      MIN  +  MY   :
              1.00 * G_2
 7531 Part-precomb C_1 M+
      MAX  +  MY   :
              1.00 * C_1
 7532 Part-precomb C_1 M-
      MIN  +  MY   :
              1.00 * C_1
 7541 Part-precomb C_2 M+
      MAX  +  MY   :
              1.00 * C_2
 7542 Part-precomb C_2 M-
      MIN  +  MY   :
              1.00 * C_2
 7561 Part-precomb Q_1 M+
      MAX  +  MY   :
              1.00 * Q_1
 7562 Part-precomb Q_1 M-
      MIN  +  MY   :
              1.00 * Q_1
```

SOFiSTiK AG - www.sofistik.de

Composite bridge 38+50+38, b=14.25m, 2x2HL1100R HISTAR460 , slab 0.30m C30/37
CSM Print of stresses in a cross section

Combinations For Stress Design

```
 7571 Part-precomb F_1 M+
      MAX  +  MY   :
              1.00 * F_1
 7572 Part-precomb F_1 M-
      MIN  +  MY   :
              1.00 * F_1
 7581 Part-precomb T_1 M+
      MAX  +  MY   :
              1.00 * T_1
 7582 Part-precomb T_1 M-
      MIN  +  MY   :
              1.00 * T_1
 7399 MaxStress-ULS
      GMAX  :
```

Combination - Calculatoric Forces and Moments

Beam	x[m]	LC	N[kN]	Vy[kN]	Vz[kN]	Mt[kNm]	My[kNm]	Mz[kNm]
				Mb[kNm2]	Mtp[kNm]	Mts[kNm]	eMy[kNm]	eMz[kNm]
110001	0.000	7103	LC 5003					
			1.0000					
		7103	-2188.7	7.76	0.00	0.00	-62.87	81.20
			LC 5005	LC 6005				
			1.0000	1.0000				
		7105	0.0	-0.36	0.00	0.00	-0.03	-3.25
			LC 5010					
			1.0000					
		7110	-72.0	0.11	0.00	0.00	0.00	1.06
			LC 5015	LC 6015				
			1.0000	1.0000				
		7115	0.0	-0.17	0.00	0.00	0.00	-1.63
			LC 5020					
			1.0000					
		7120	-22.3	0.03	0.00	0.00	0.00	0.31
			LC 5021					
			1.0000					
		7121	0.0	0.00	0.00	0.00	0.00	0.00
			LC 5025	LC 6025				
			1.0000	1.0000				
		7125	0.0	-0.17	0.00	0.00	0.00	-1.64
			LC 5026					
			1.0000					
		7126	0.0	0.00	0.00	0.00	0.00	0.00
			LC 5027					
			1.0000					
		7127	-347.3	0.51	0.00	0.00	0.00	4.85
			LC 5030					
			1.0000					
		7130	35.8	0.02	0.00	0.00	0.00	-0.54
			LC 5035	LC 6035				
			1.0000	1.0000				
		7135	6.2	-0.47	0.00	0.00	0.00	-1.60
			LC 5040					
			1.0000					
		7140	-194.8	-7.90	0.00	0.00	-0.01	-60.99
			LC 5045	LC 6045				
			1.0000	1.0000				
		7145	12.7	-0.59	0.00	0.00	0.00	-3.63
			LC 5046	LC 6046				
			1.0000	1.0000				
		7146	10.6	-0.92	0.00	0.00	0.00	-7.58
			LC 5047	LC 6047				
			1.0000	1.0000				
		7147	5.5	-0.36	0.00	0.00	0.00	-0.53
			LC 5048	LC 6048				
			1.0000	1.0000				

SOFiSTiK AG - www.sofistik.de

Composite bridge 38+50+38, b=14.25m, 2x2HL1100R HISTAR460 , slab 0.30m C30/37
Incremental results of CSM stages; CS10: steel structure

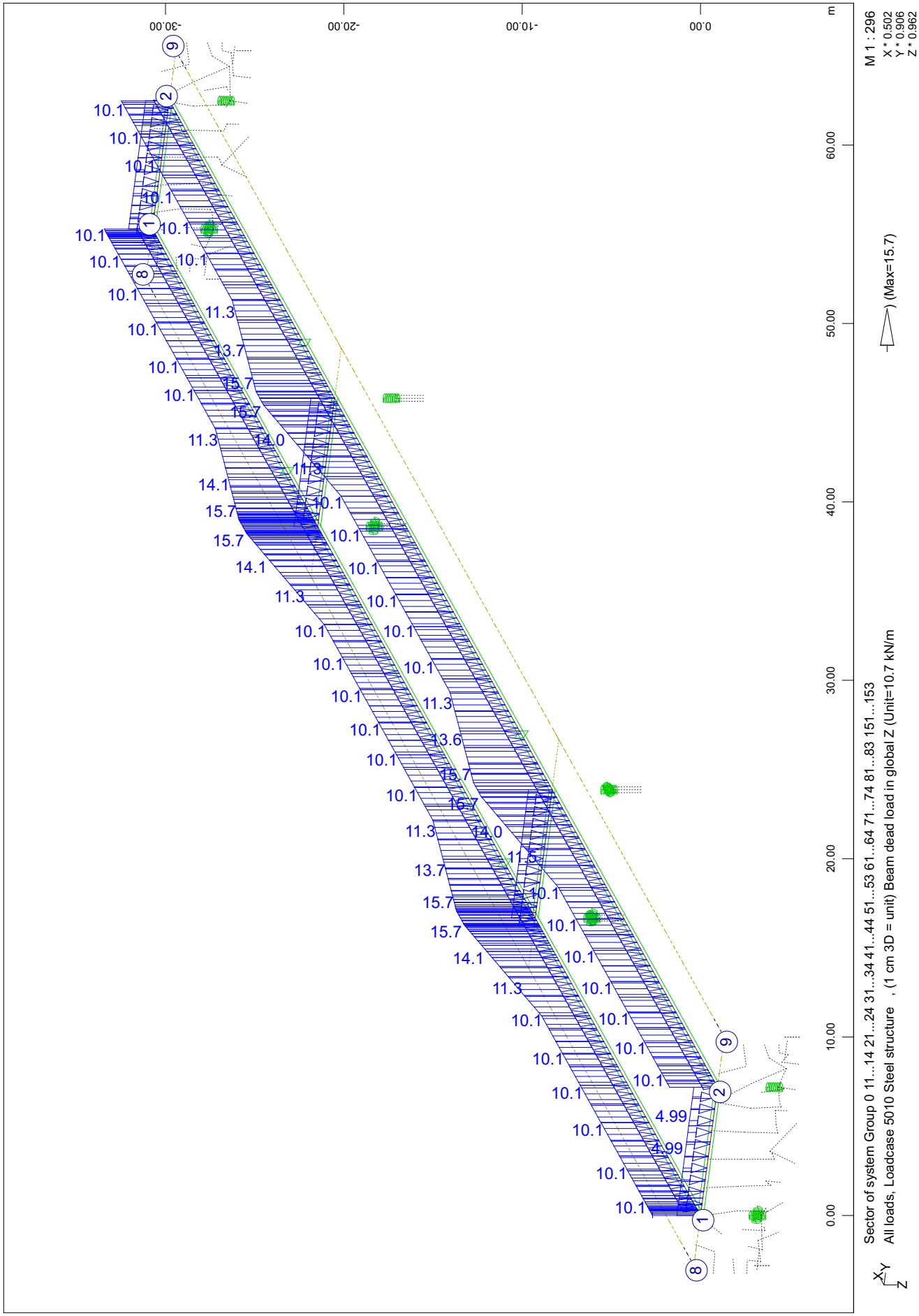

SOFiSTiK AG - www.sofistik.de

Composite bridge 38+50+38, b=14.25m, 2x2HL1100R HISTAR460 , slab 0.30m C30/37

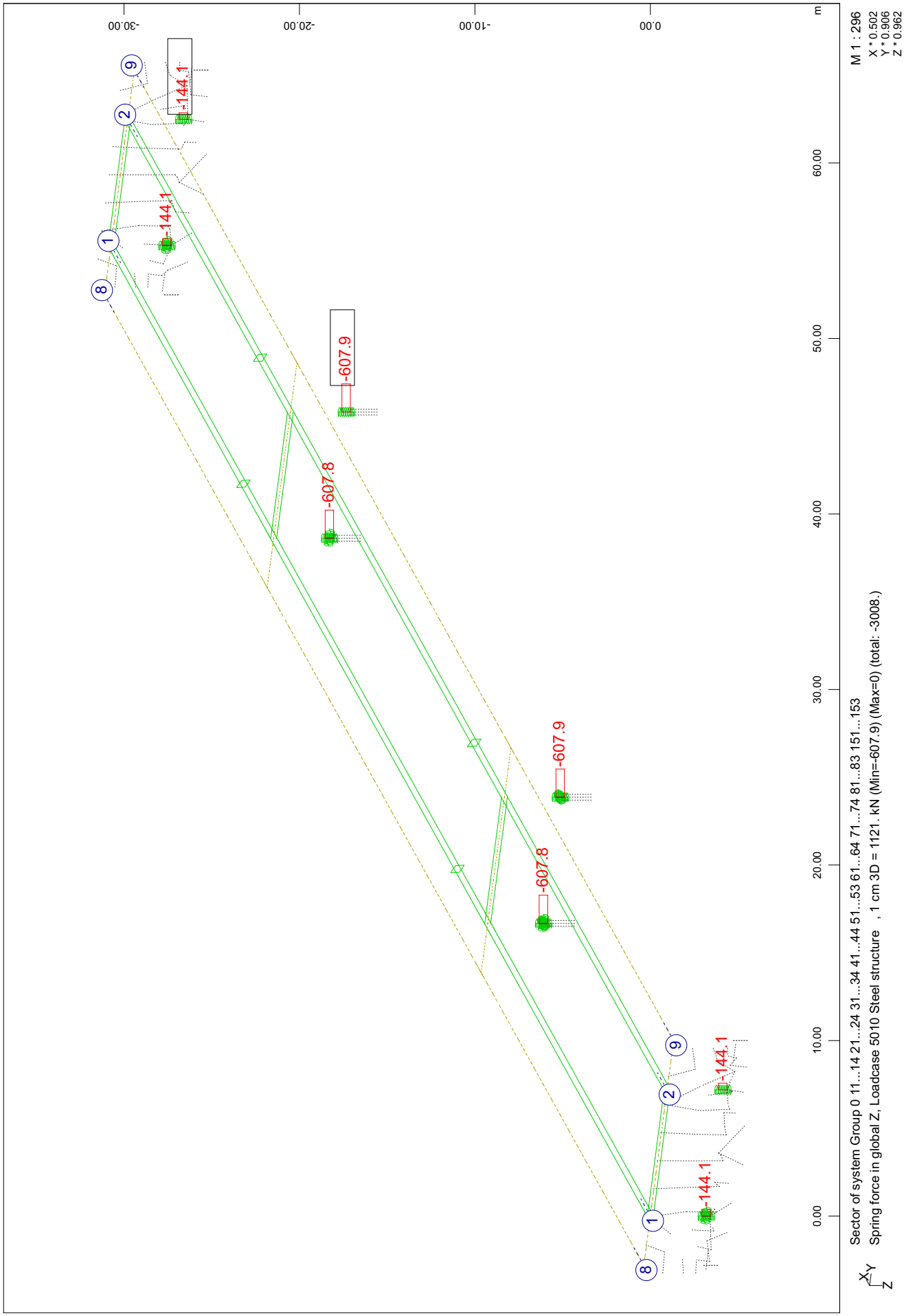

SOFiSTiK AG - www.sofistik.de

Composite bridge 38+50+38, b=14.25m, 2x2HL1100R HISTAR460 , slab 0.30m C30/37

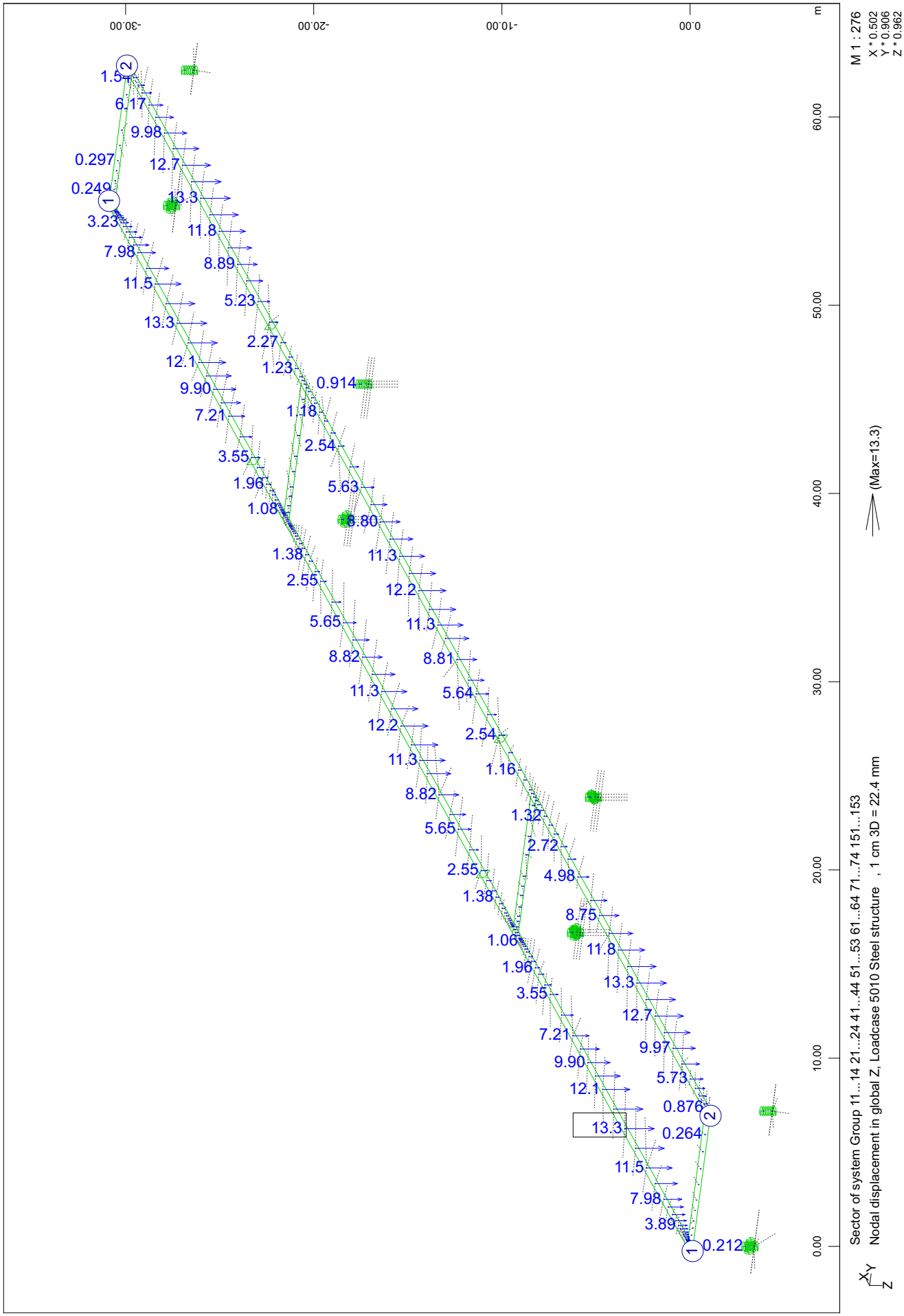

SOFiSTiK AG - www.sofistik.de

Composite bridge 38+50+38, b=14.25m, 2x2HL1100R HISTAR460 , slab 0.30m C30/37

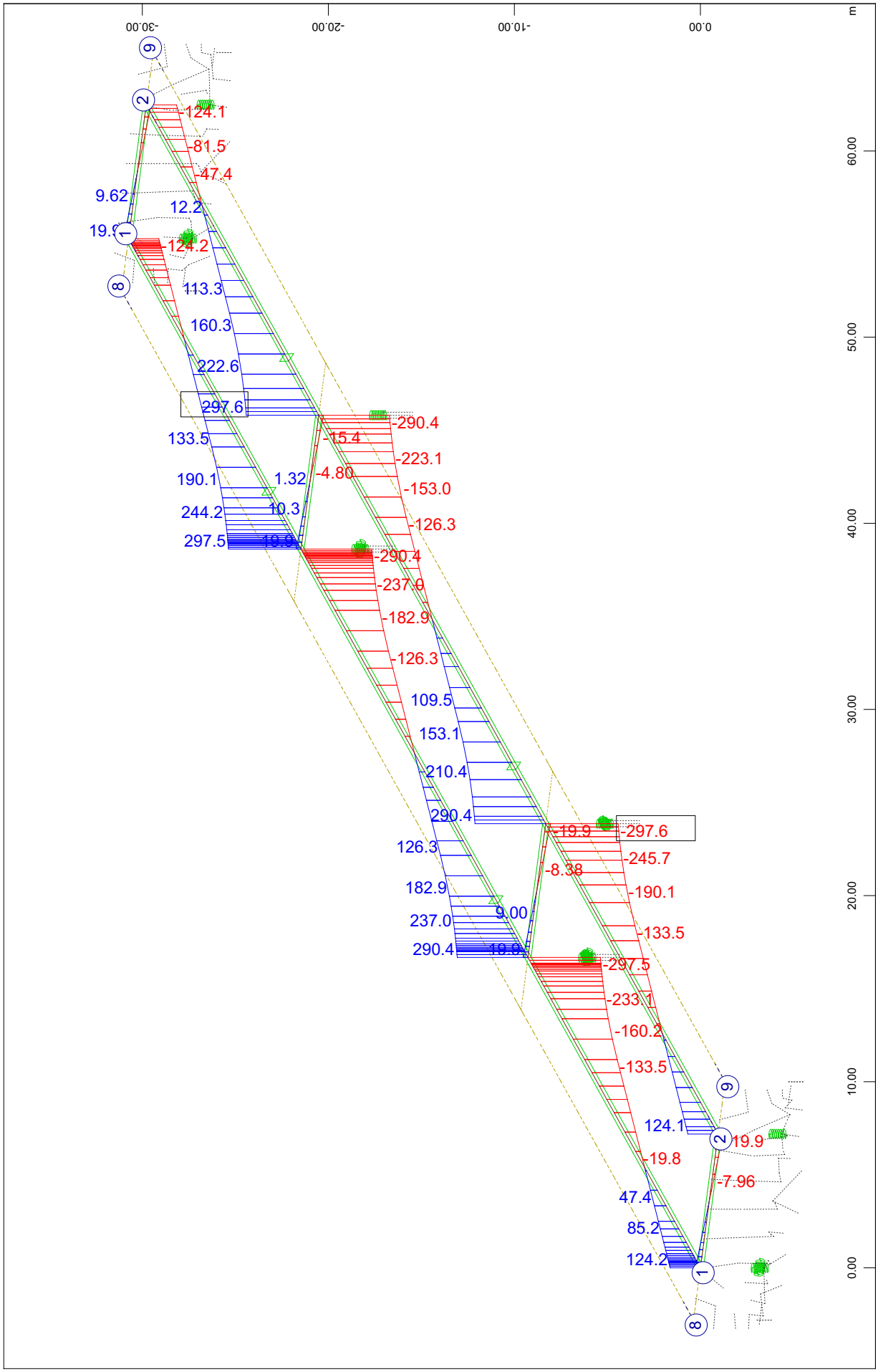

SOFiSTiK AG - www.sofistik.de

Composite bridge 38+50+38, b=14.25m, 2x2HL1100R HISTAR460 , slab 0.30m C30/37

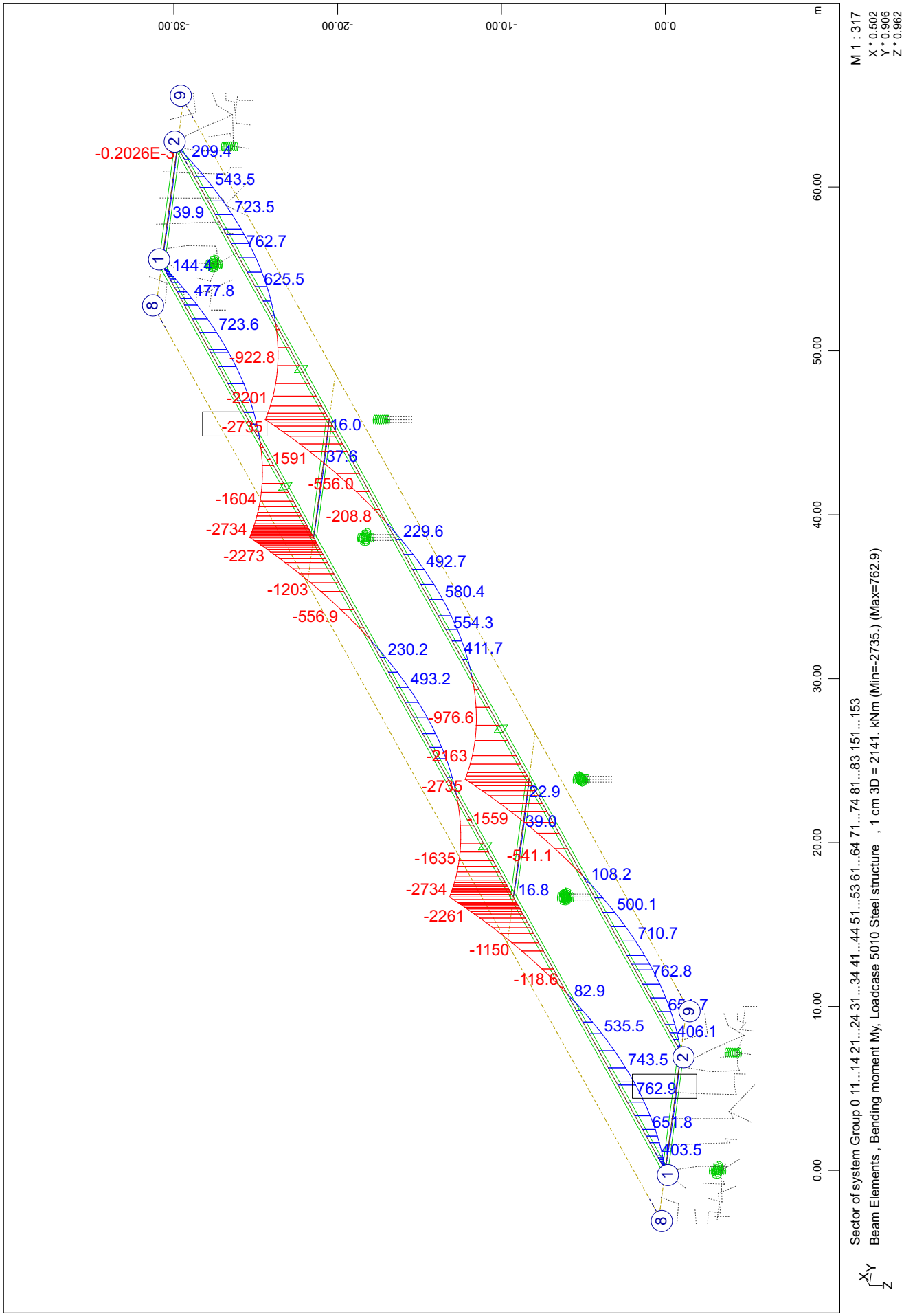

Composite bridge 38+50+38, b=14.25m, 2x2HL1100R HISTAR460 , slab 0.30m C30/37

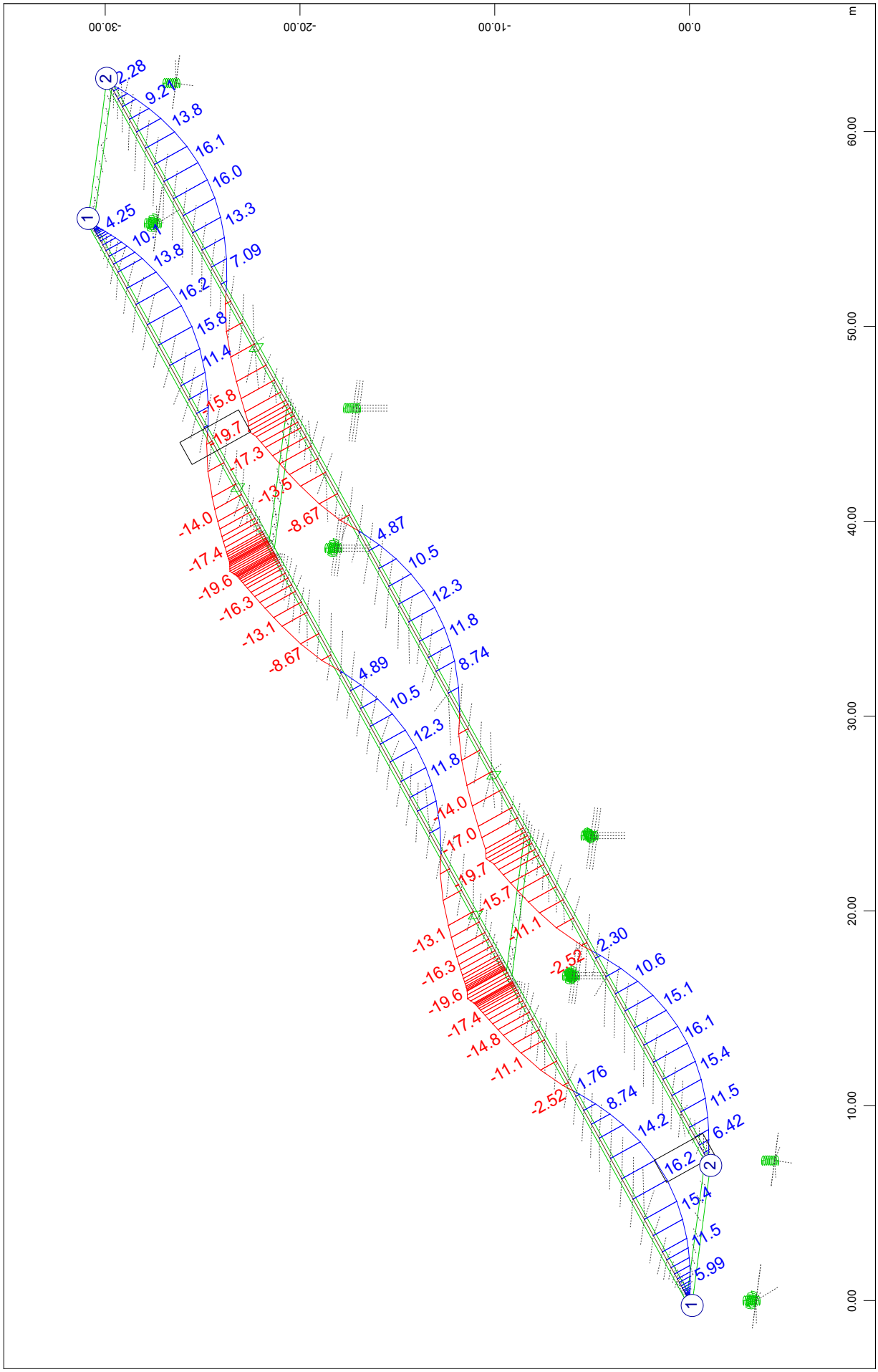

SOFiSTiK AG - www.sofistik.de

Composite bridge 38+50+38, b=14.25m, 2x2HL1100R HISTAR460 , slab 0.30m C30/37

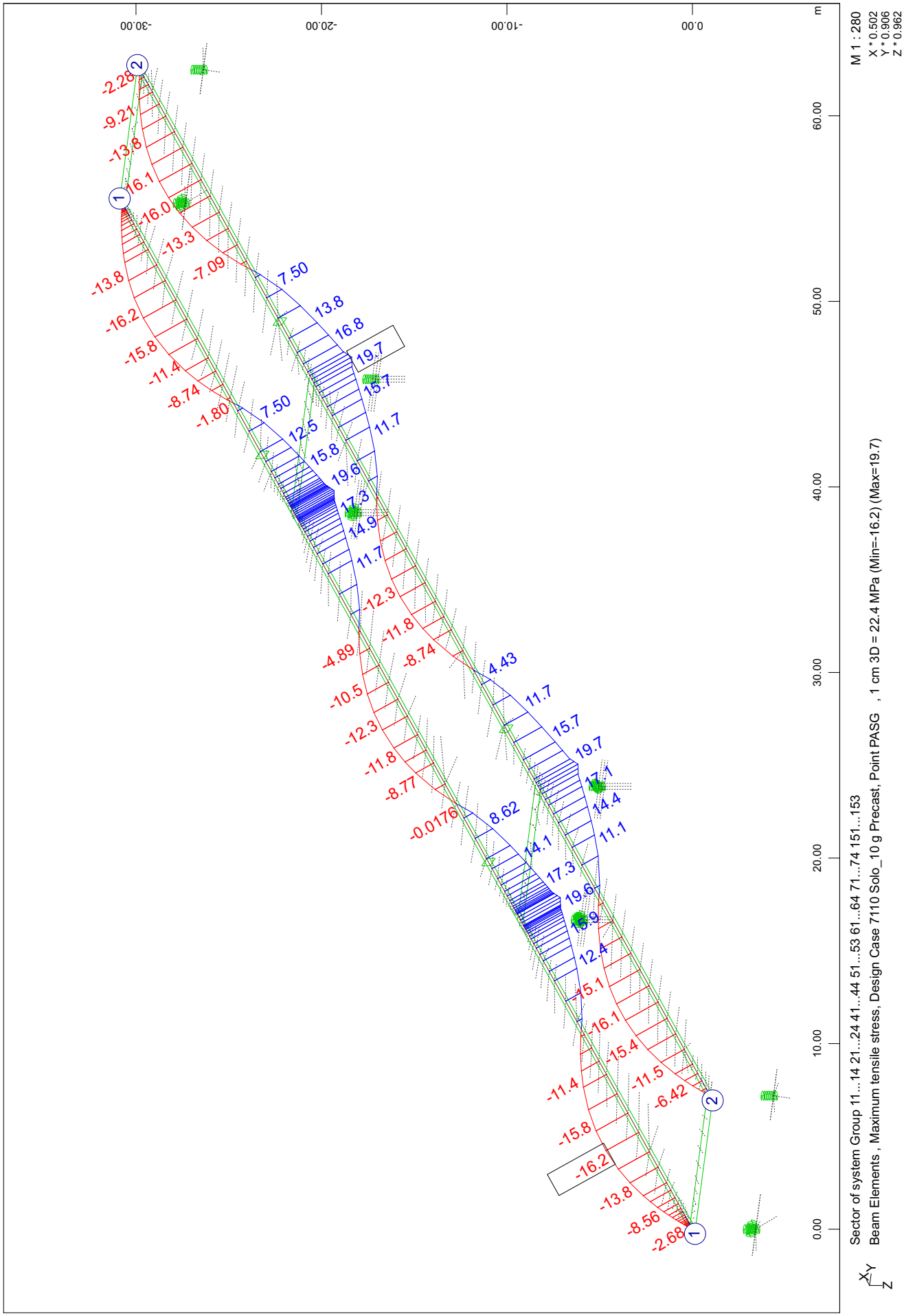

SOFiSTiK AG - www.sofistik.de

Composite bridge 38+50+38, b=14.25m, 2x2HL1100R HISTAR460 , slab 0.30m C30/37

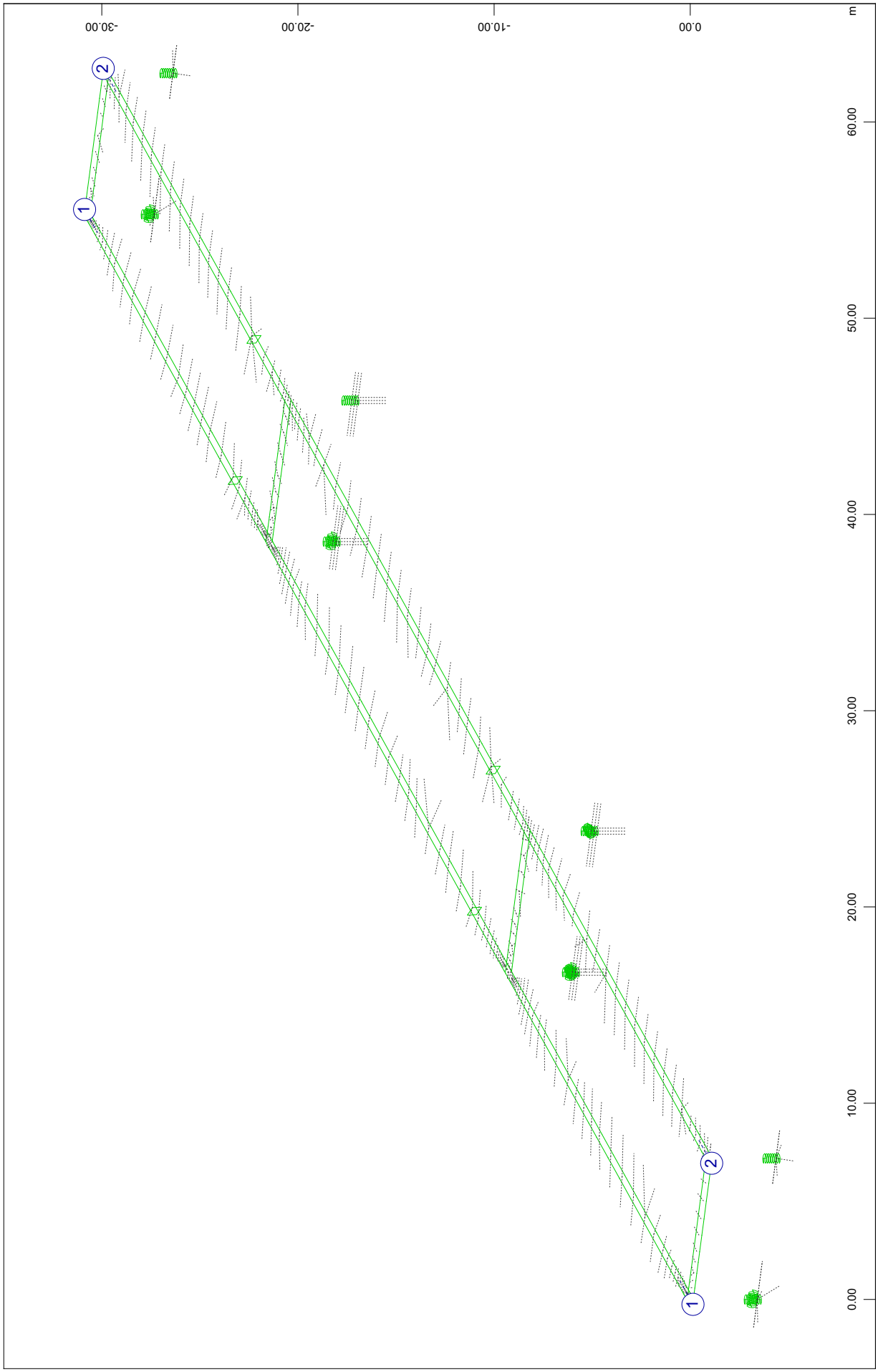

SOFiSTiK AG - www.sofistik.de

```
Composite bridge 38+50+38, b=14.25m, 2x2HL1100R HISTAR460 , slab 0.30m C30/37

+++++ warning no.   807 in program gr3_l_mach
       BEAM TYPE SZPT STYP BEAM design case  7110 not valid : No values found
```

SOFiSTiK AG - www.sofistik.de

Composite bridge 38+50+38, b=14.25m, 2x2HL1100R HISTAR460 , slab 0.30m C30/37

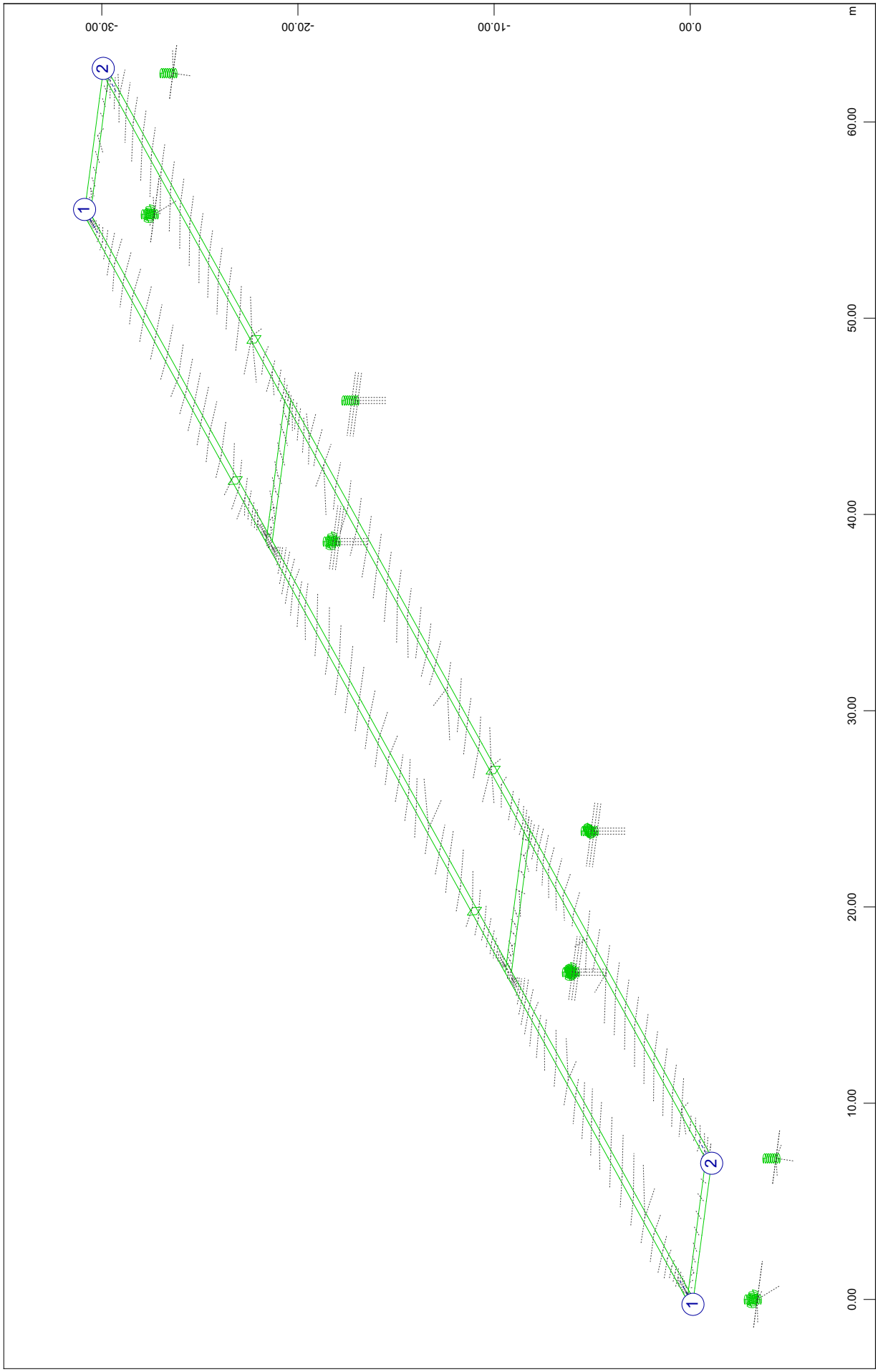

SOFiSTiK AG - www.sofistik.de

```
Composite bridge 38+50+38, b=14.25m, 2x2HL1100R HISTAR460 , slab 0.30m C30/37

+++++ warning no.   807 in program gr3_l_mach
       BEAM TYPE SDPT STYP BEAM design case  7110 not valid : No values found
```

SOFiSTiK AG - www.sofistik.de

Composite bridge 38+50+38, b=14.25m, 2x2HL1100R HISTAR460 , slab 0.30m C30/37

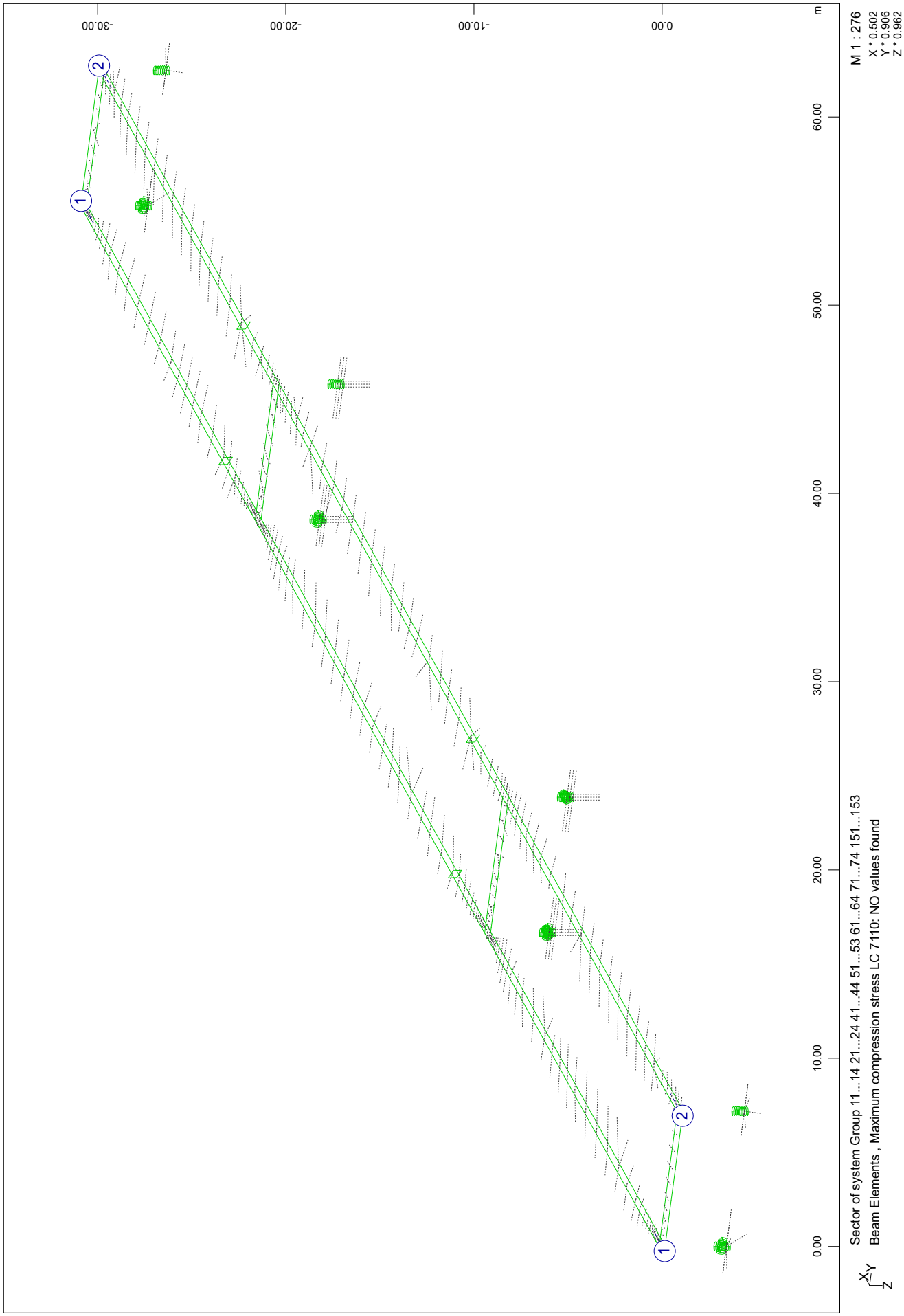

SOFiSTiK AG - www.sofistik.de

```
Composite bridge 38+50+38, b=14.25m, 2x2HL1100R HISTAR460 , slab 0.30m C30/37
Incremental results of CSM stages; CS15: C+S supports 28days

+++++ warning no.   807 in program gr3_l_mach
       BEAM TYPE SDPT STYP BEAM design case  7110 not valid : No values found
```

SOFiSTiK AG - www.sofistik.de

Composite bridge 38+50+38, b=14.25m, 2x2HL1100R HISTAR460 , slab 0.30m C30/37
Incremental results of CSM stages; CS15: C+S supports 28days

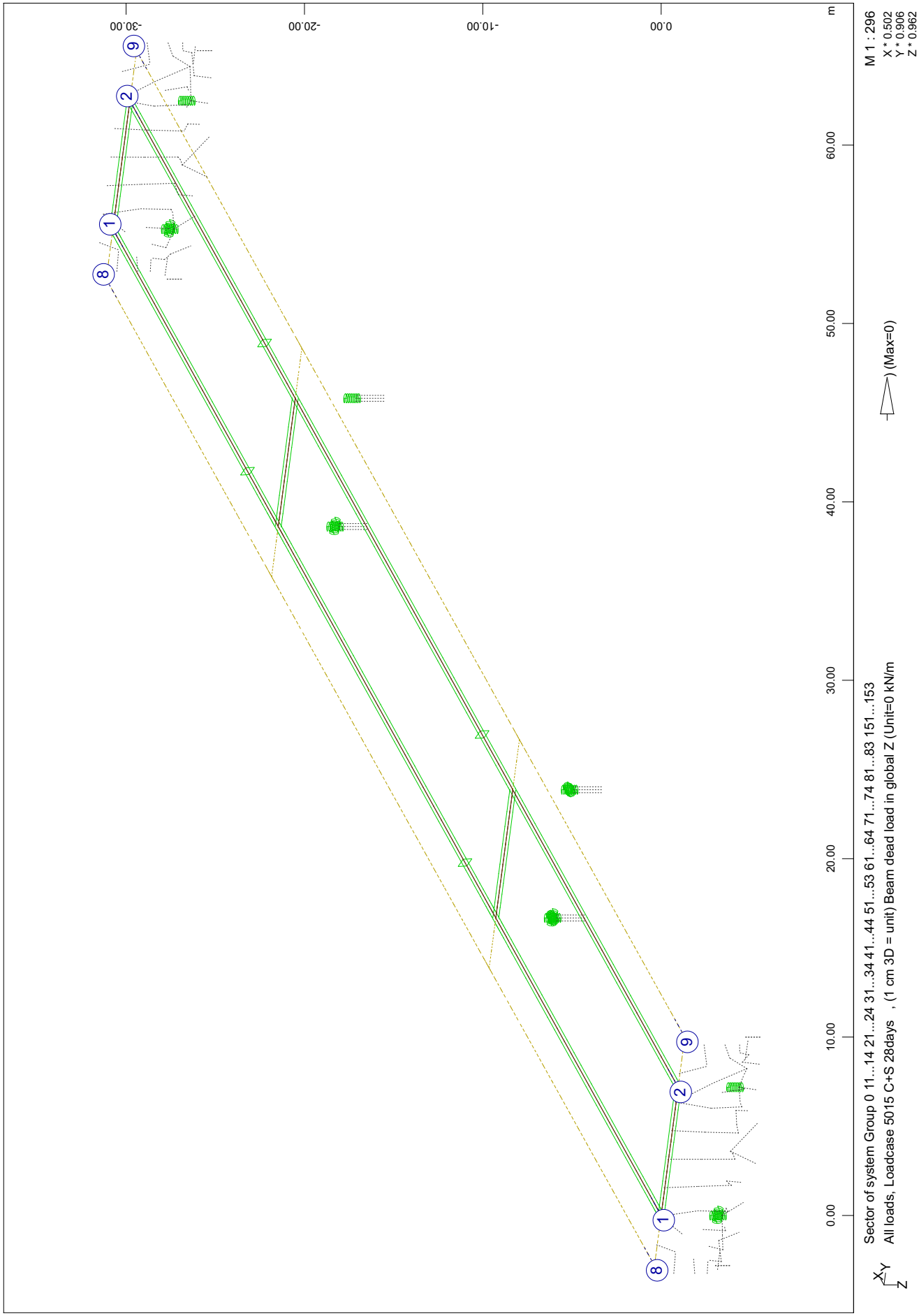

SOFiSTiK AG - www.sofistik.de

Composite bridge 38+50+38, b=14.25m, 2x2HL1100R HISTAR460 , slab 0.30m C30/37

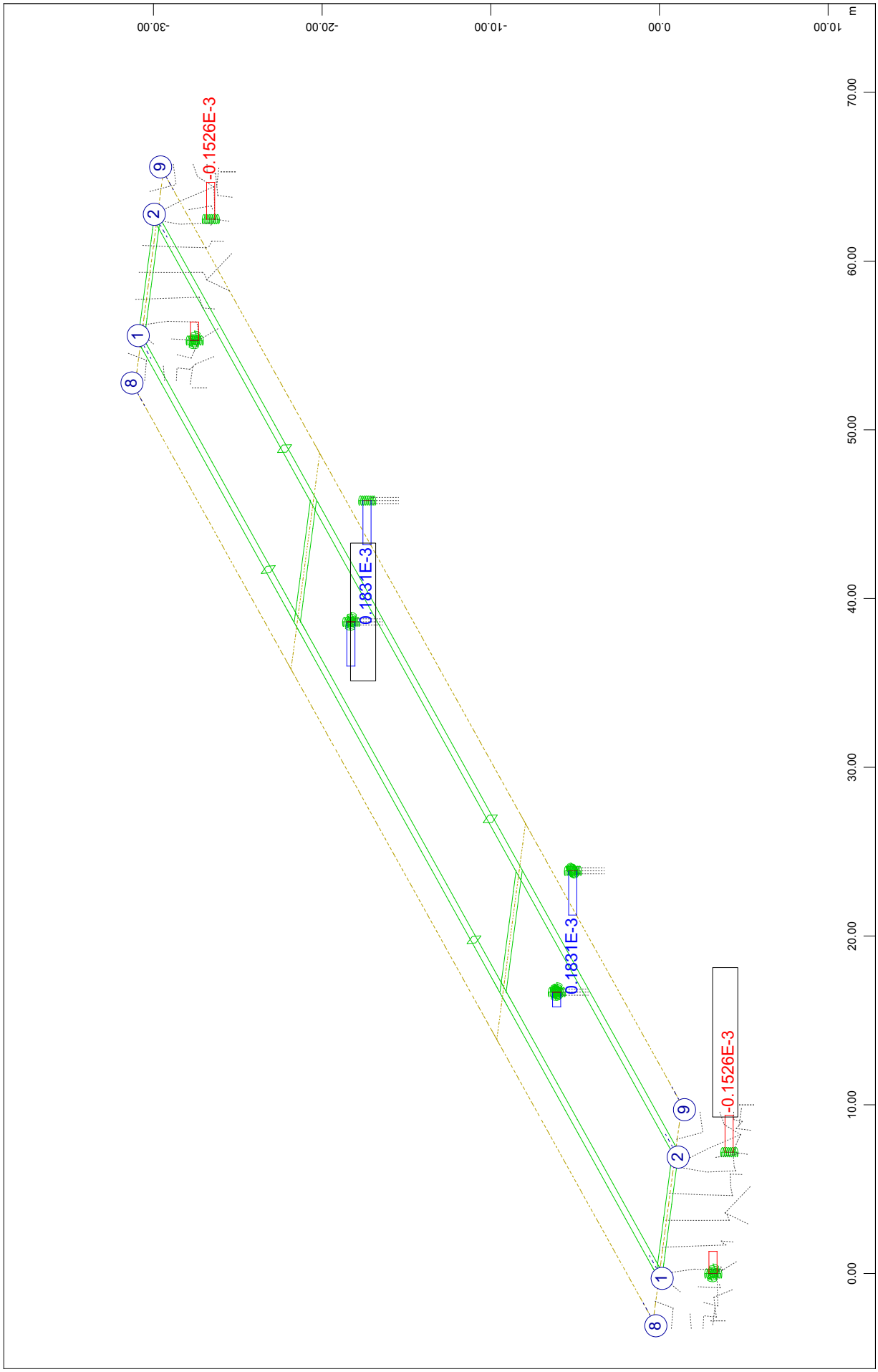

SOFiSTiK AG - www.sofistik.de

Composite bridge 38+50+38, b=14.25m, 2x2HL1100R HISTAR460 , slab 0.30m C30/37

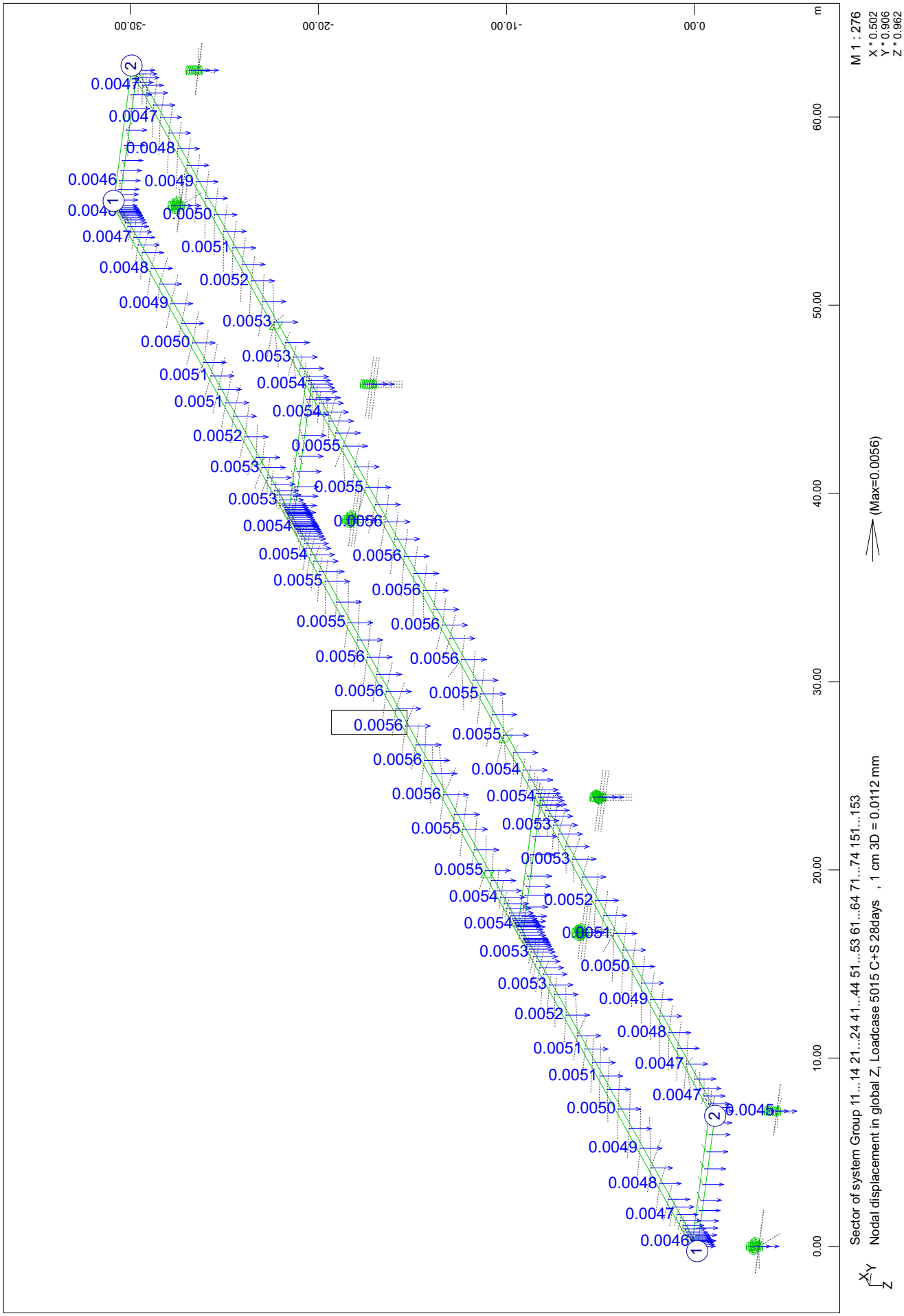

SOFiSTiK AG - www.sofistik.de

Composite bridge 38+50+38, b=14.25m, 2x2HL1100R HISTAR460 , slab 0.30m C30/37

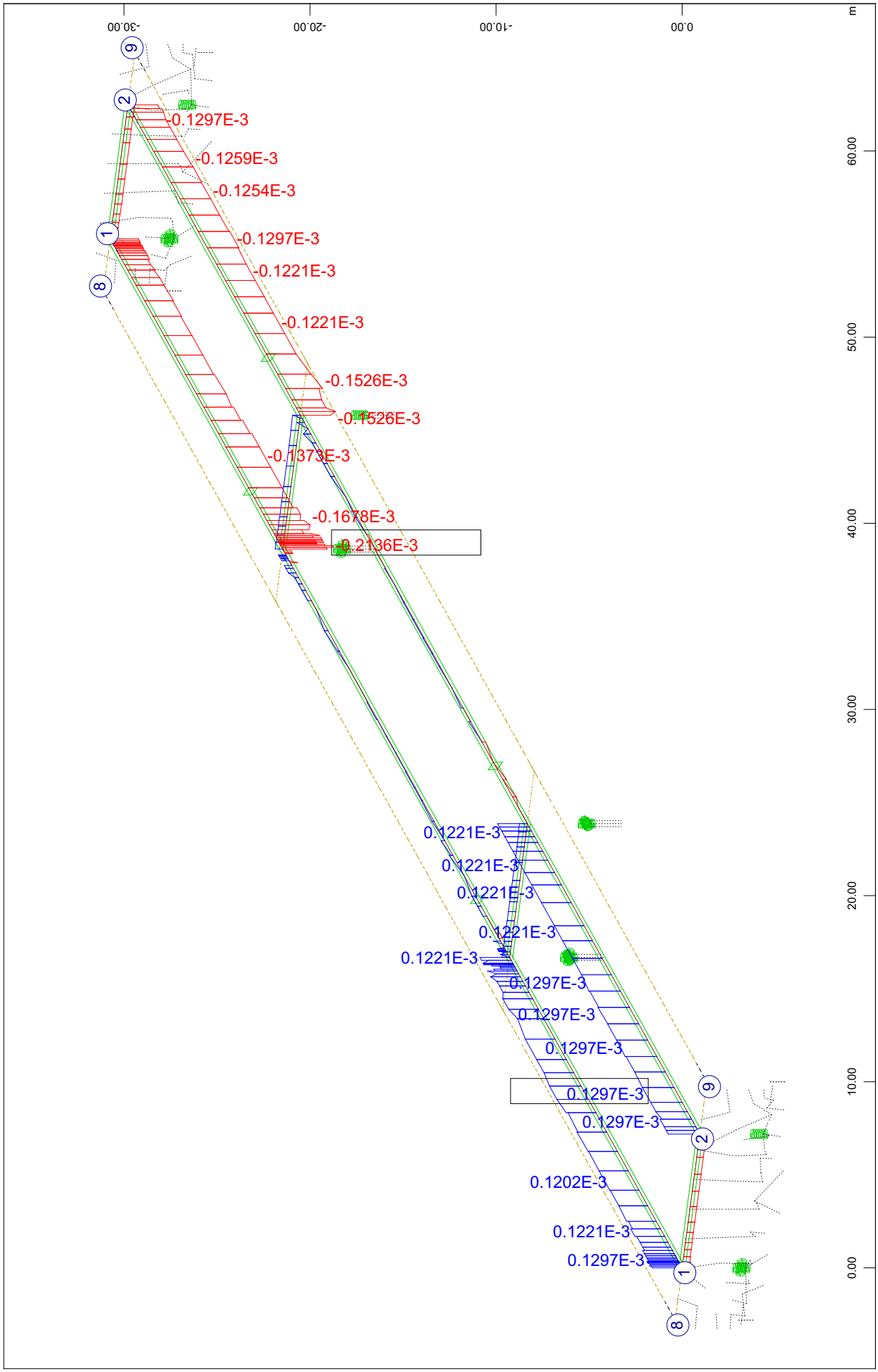

SOFiSTiK AG - www.sofistik.de

Composite bridge 38+50+38, b=14.25m, 2x2HL1100R HISTAR460 , slab 0.30m C30/37

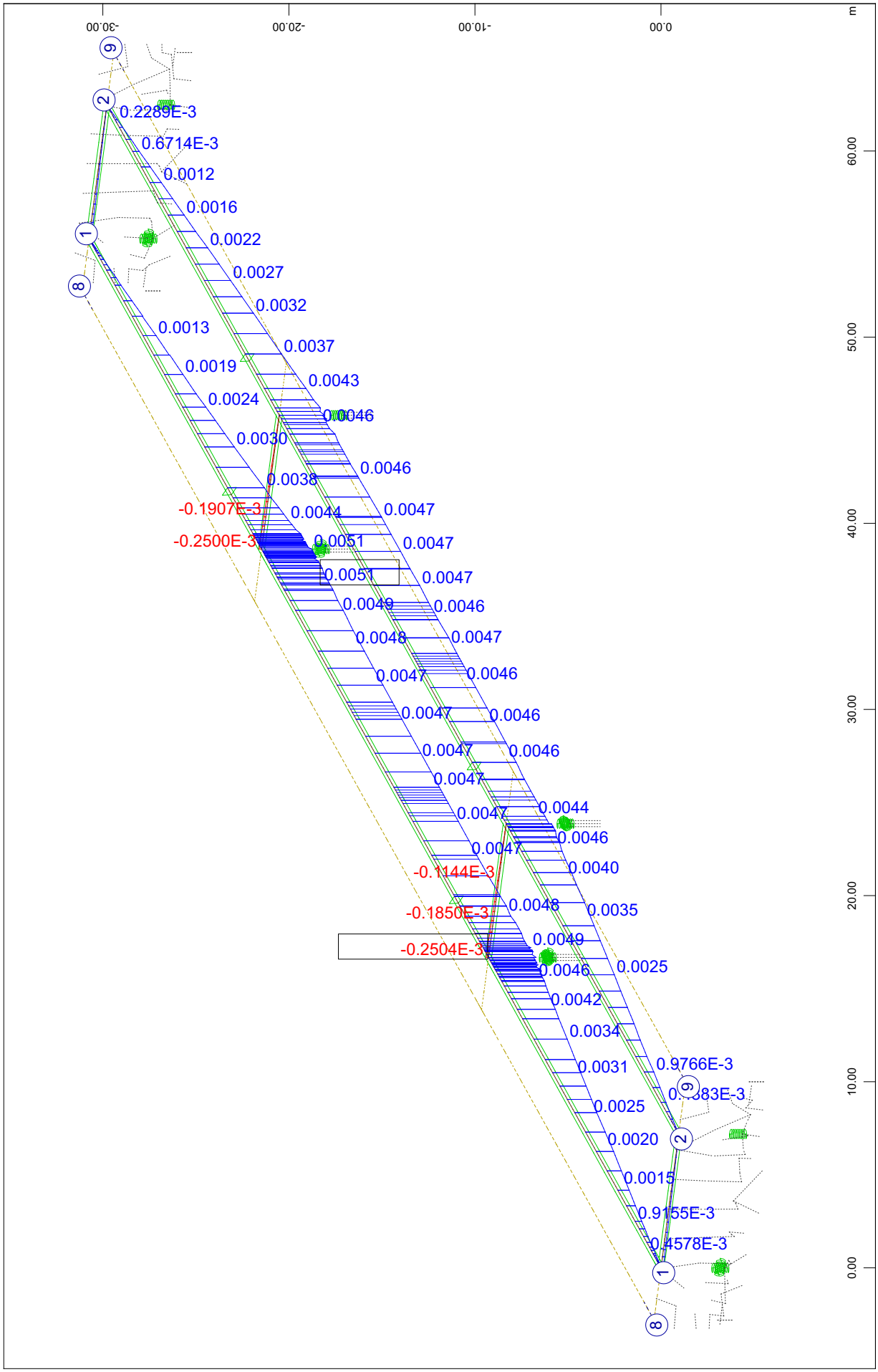

SOFiSTiK AG - www.sofistik.de

Composite bridge 38+50+38, b=14.25m, 2x2HL1100R HISTAR460 , slab 0.30m C30/37

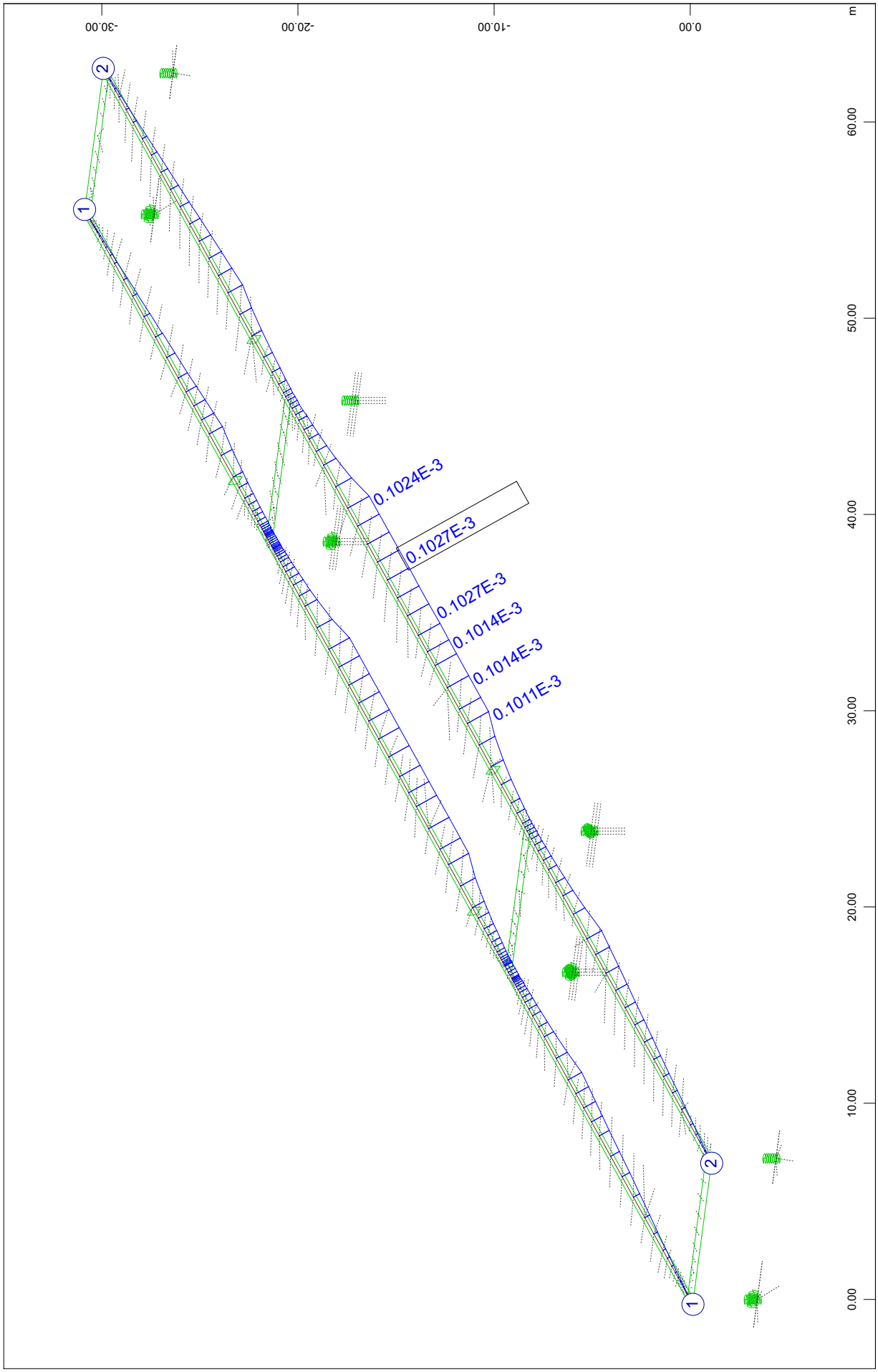

SOFiSTiK AG - www.sofistik.de

Composite bridge 38+50+38, b=14.25m, 2x2HL1100R HISTAR460 , slab 0.30m C30/37

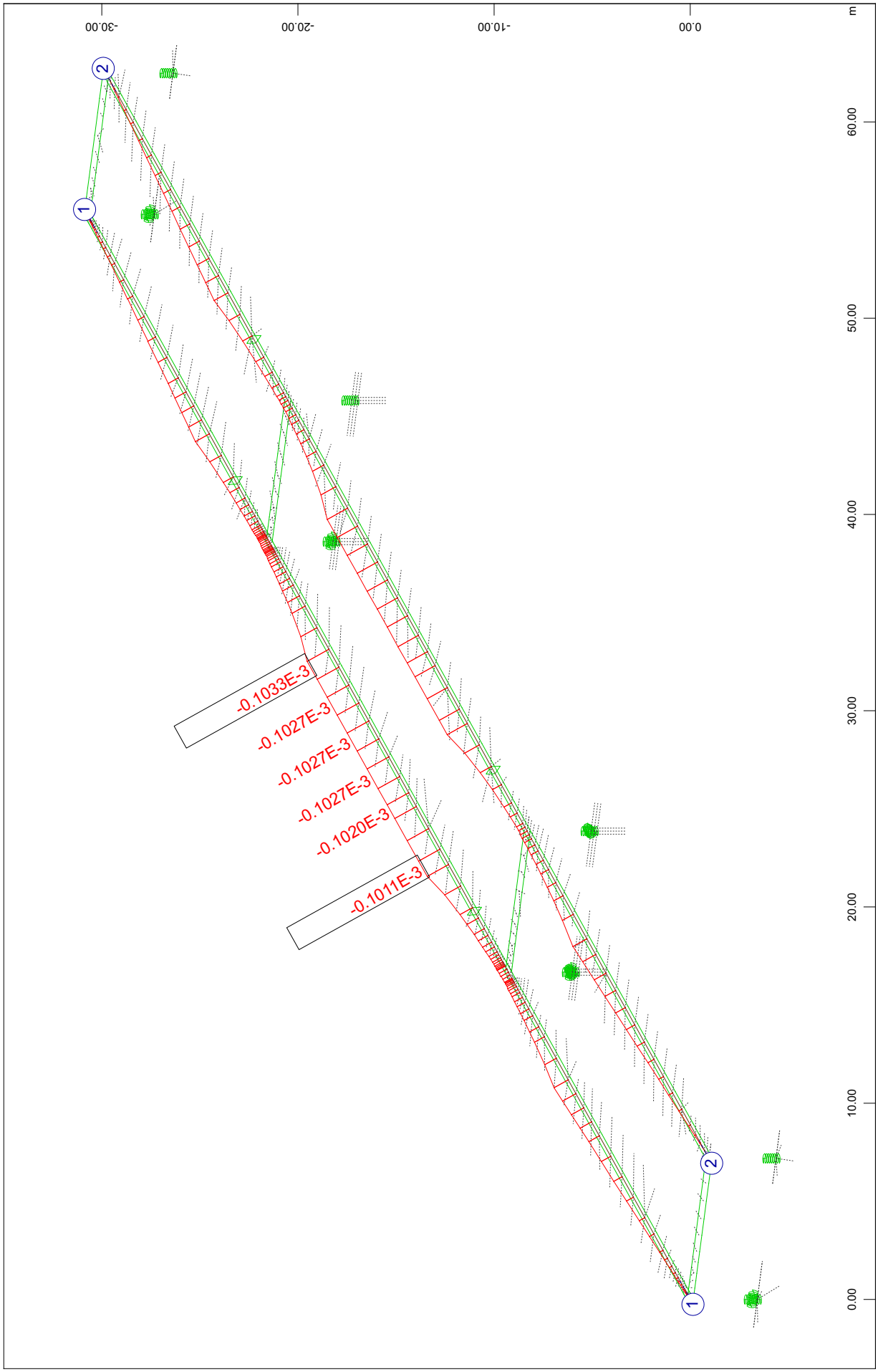

SOFiSTiK AG - www.sofistik.de

Composite bridge 38+50+38, b=14.25m, 2x2HL1100R HISTAR460 , slab 0.30m C30/37

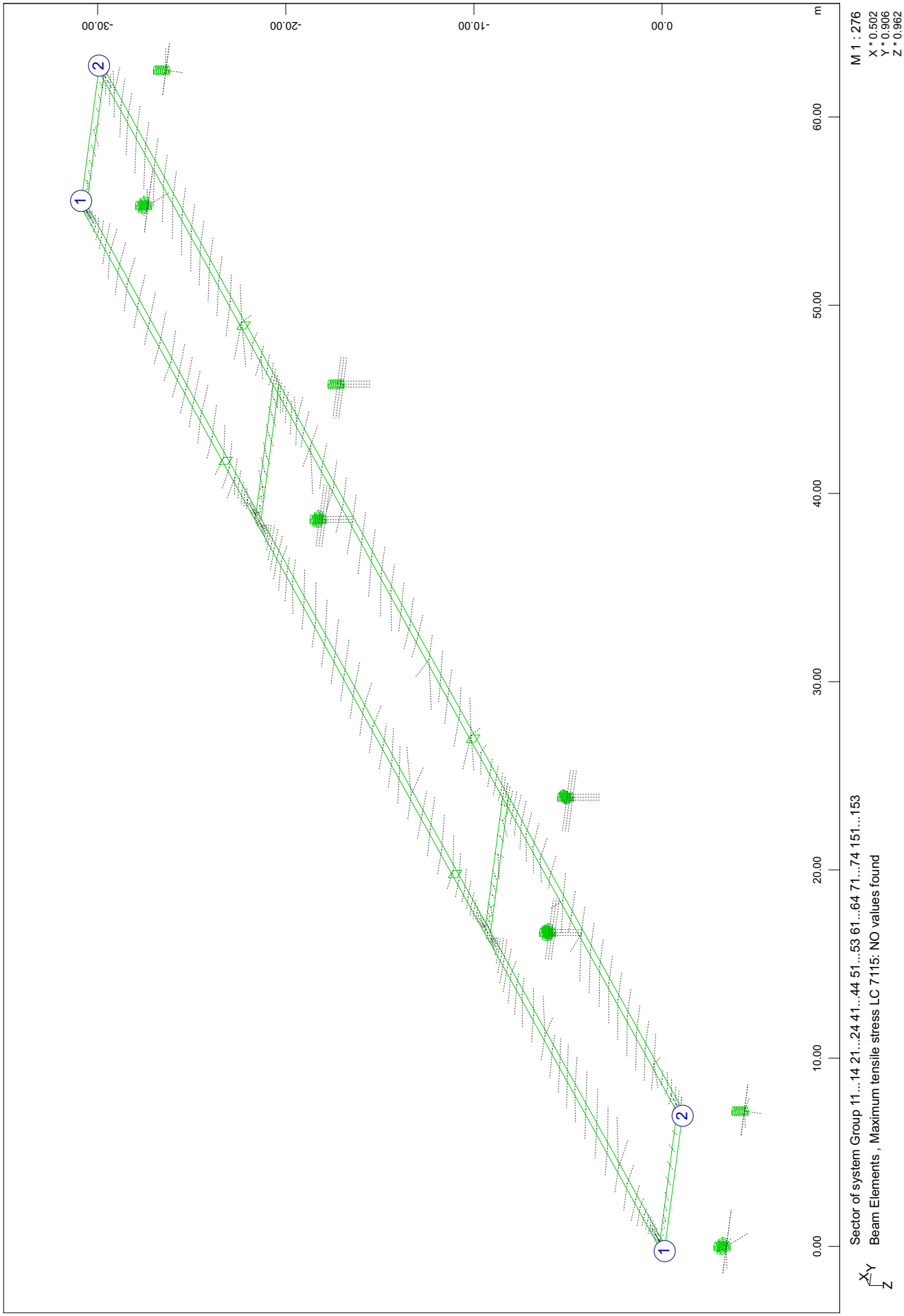

SOFiSTiK AG - www.sofistik.de

```
Composite bridge 38+50+38, b=14.25m, 2x2HL1100R HISTAR460 , slab 0.30m C30/37

+++++ warning no.   807 in program gr3_l_mach
       BEAM TYPE SZPT STYP BEAM design case  7115 not valid : No values found
```

SOFiSTiK AG - www.sofistik.de

Composite bridge 38+50+38, b=14.25m, 2x2HL1100R HISTAR460 , slab 0.30m C30/37

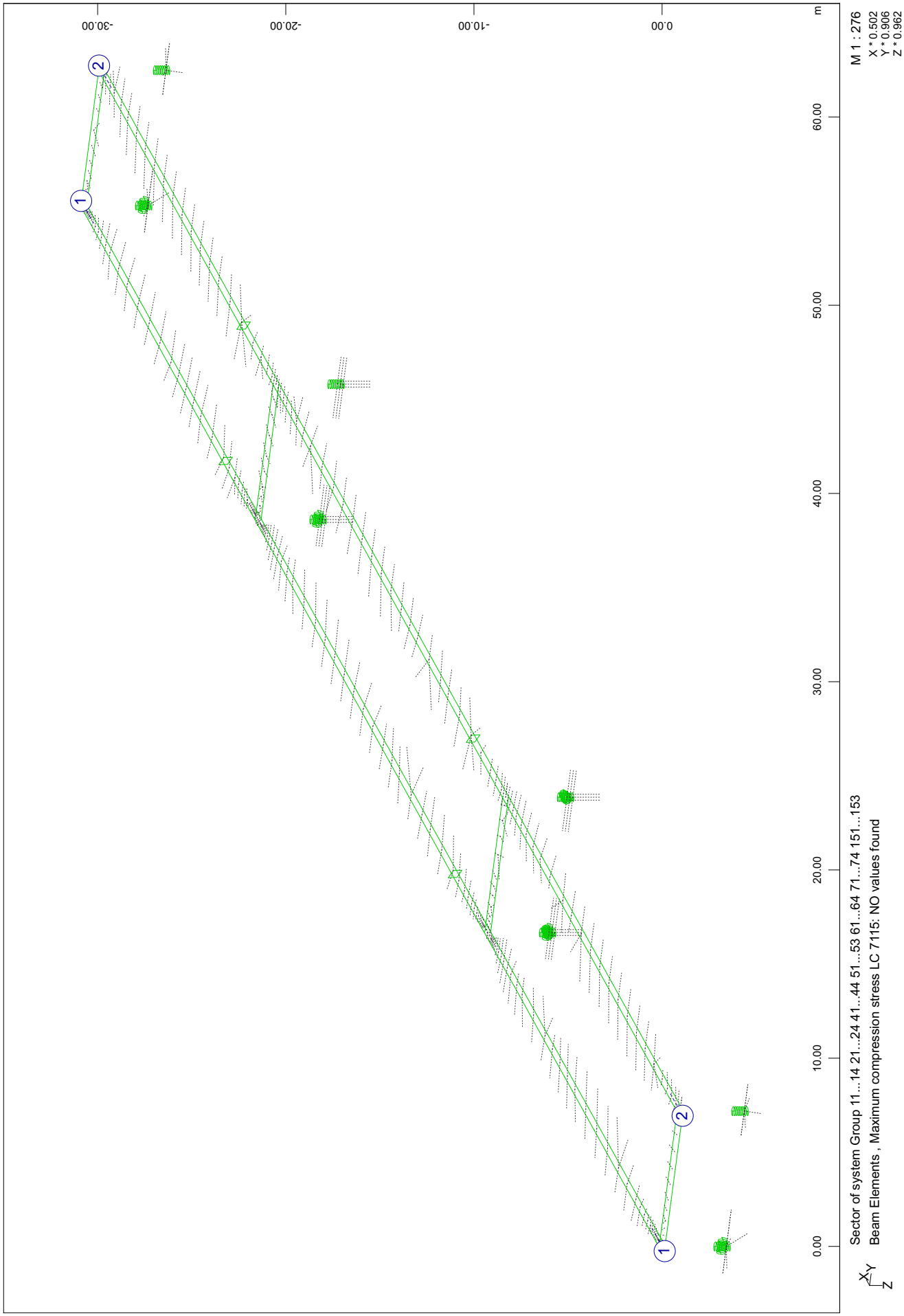

SOFiSTiK AG - www.sofistik.de

```
Composite bridge 38+50+38, b=14.25m, 2x2HL1100R HISTAR460 , slab 0.30m C30/37

+++++ warning no.   807 in program gr3_l_mach
       BEAM TYPE SDPT STYP BEAM design case  7115 not valid : No values found
```

SOFiSTiK AG - www.sofistik.de

Composite bridge 38+50+38, b=14.25m, 2x2HL1100R HISTAR460 , slab 0.30m C30/37

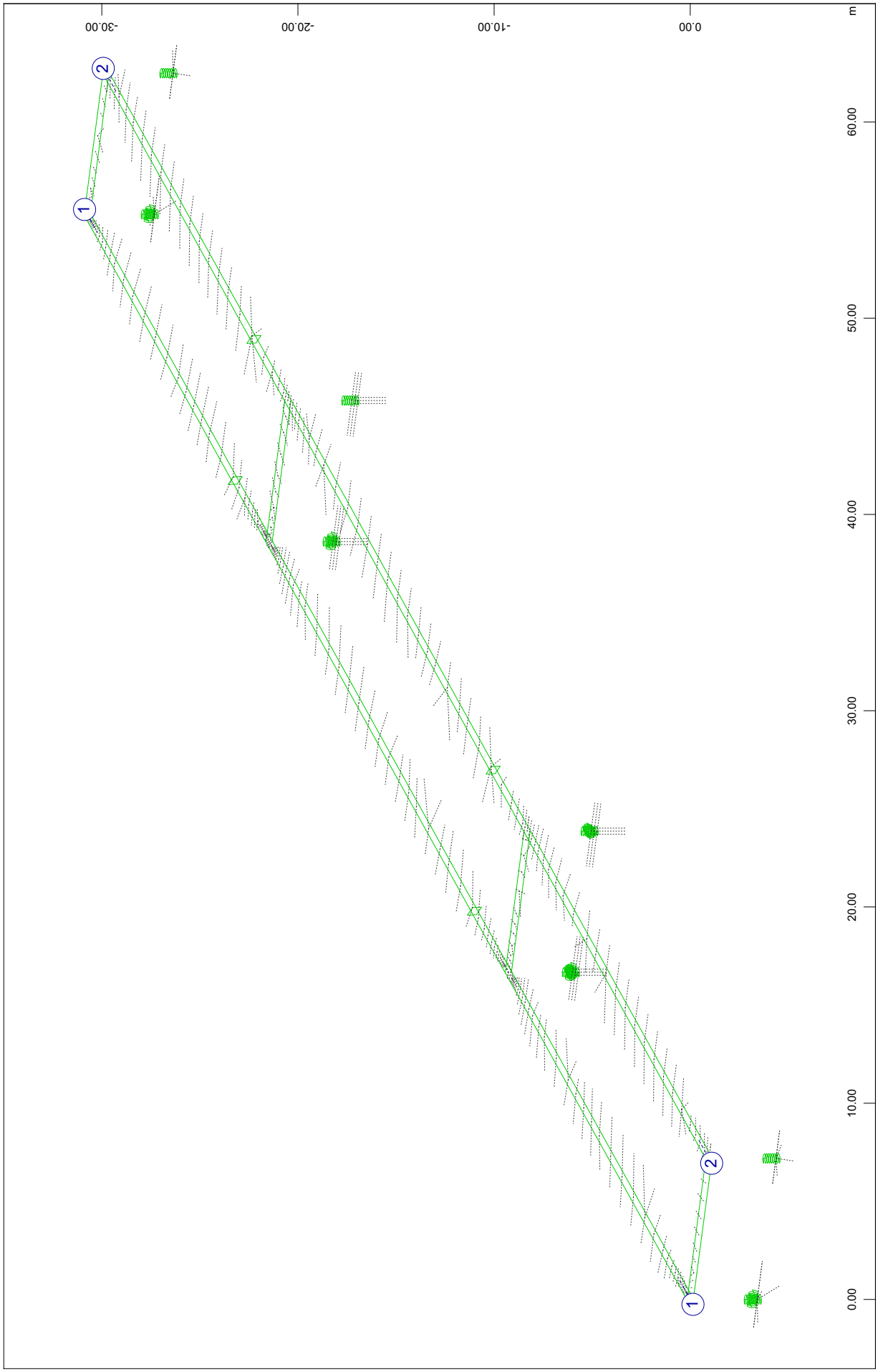

SOFiSTiK AG - www.sofistik.de

```
Composite bridge 38+50+38, b=14.25m, 2x2HL1100R HISTAR460 , slab 0.30m C30/37
Incremental results of CSM stages; CS20: scaffoldings+bottom concrete weight

+++++ warning no.   807 in program gr3_l_mach
       BEAM TYPE SDPT STYP BEAM design case  7115 not valid : No values found
```

SOFiSTiK AG - www.sofistik.de

Composite bridge 38+50+38, b=14.25m, 2x2HL1100R HISTAR460 , slab 0.30m C30/37
Incremental results of CSM stages; CS20: scaffoldings+bottom concrete weight

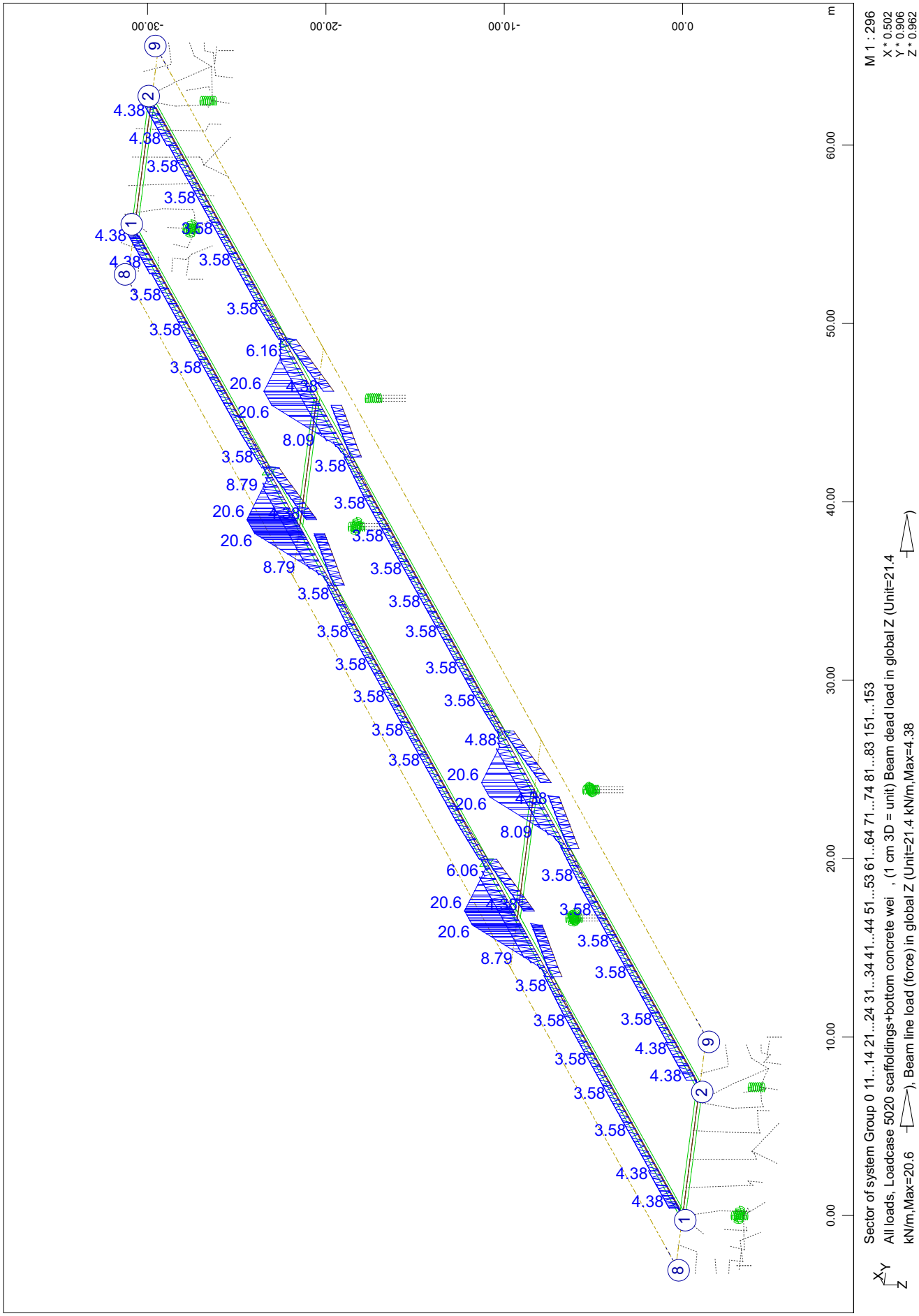

SOFiSTiK AG - www.sofistik.de

Composite bridge 38+50+38, b=14.25m, 2x2HL1100R HISTAR460 , slab 0.30m C30/37

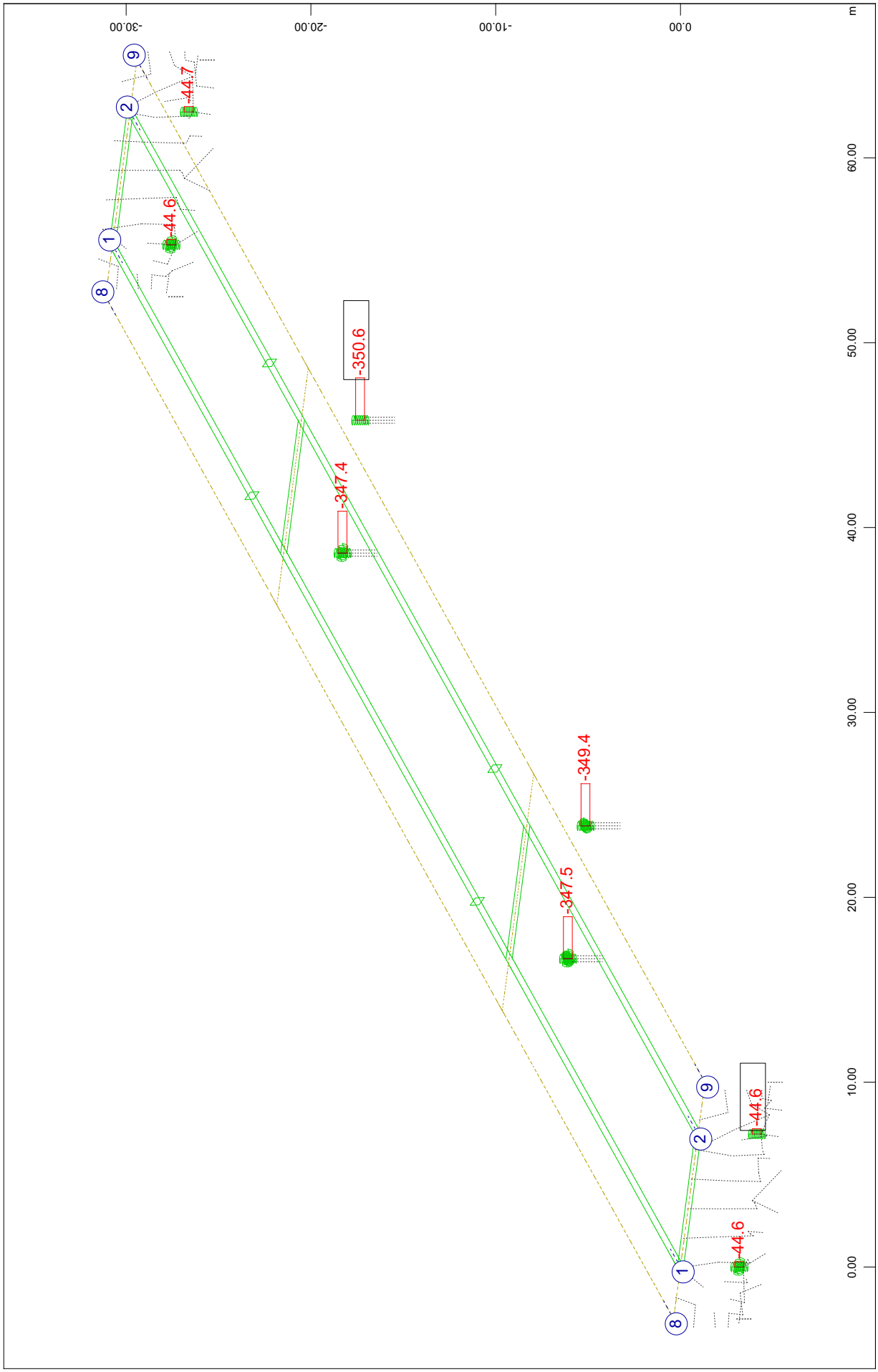

SOFiSTiK AG - www.sofistik.de

Composite bridge 38+50+38, b=14.25m, 2x2HL1100R HISTAR460 , slab 0.30m C30/37

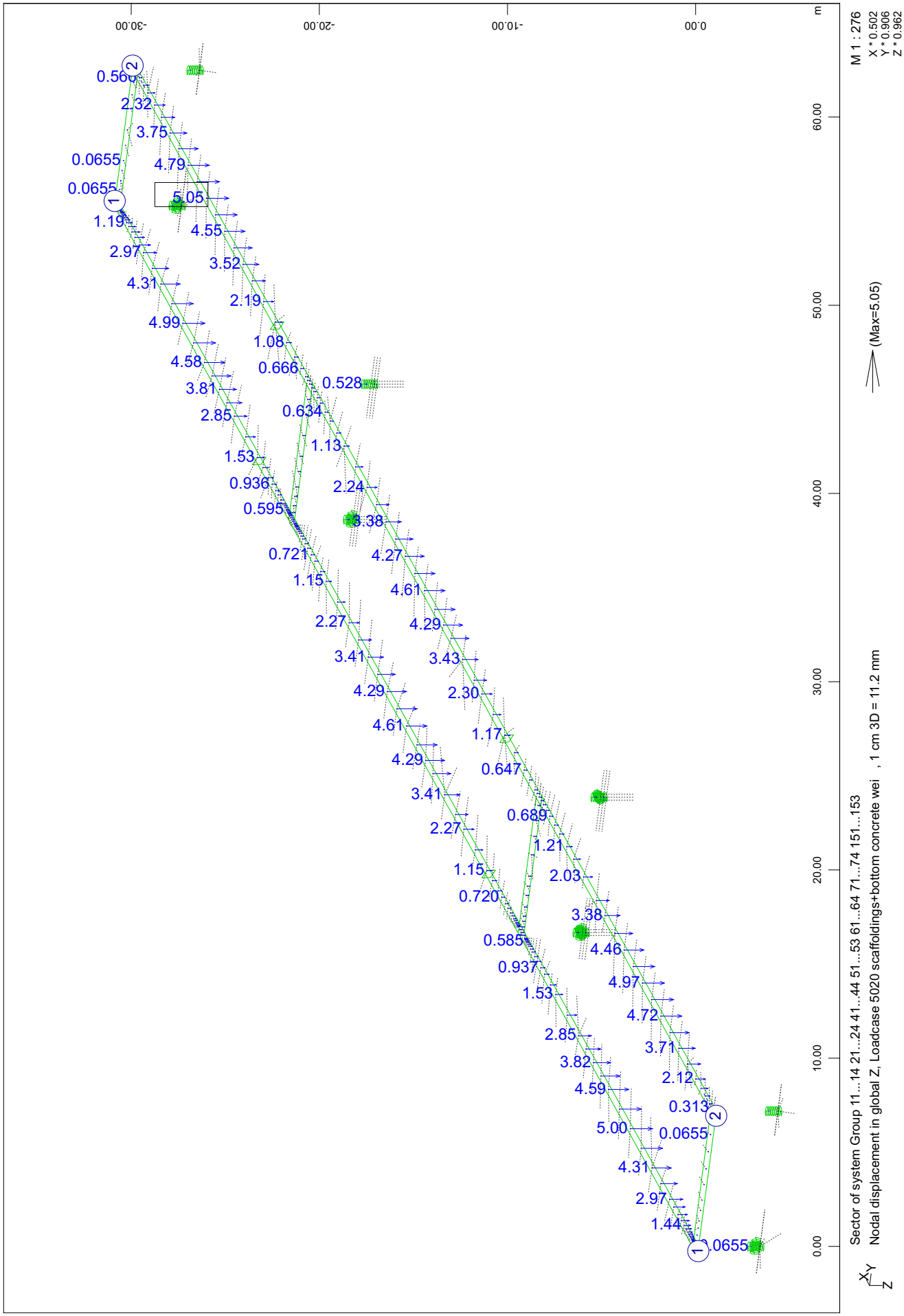

SOFiSTiK AG - www.sofistik.de

Composite bridge 38+50+38, b=14.25m, 2x2HL1100R HISTAR460 , slab 0.30m C30/37

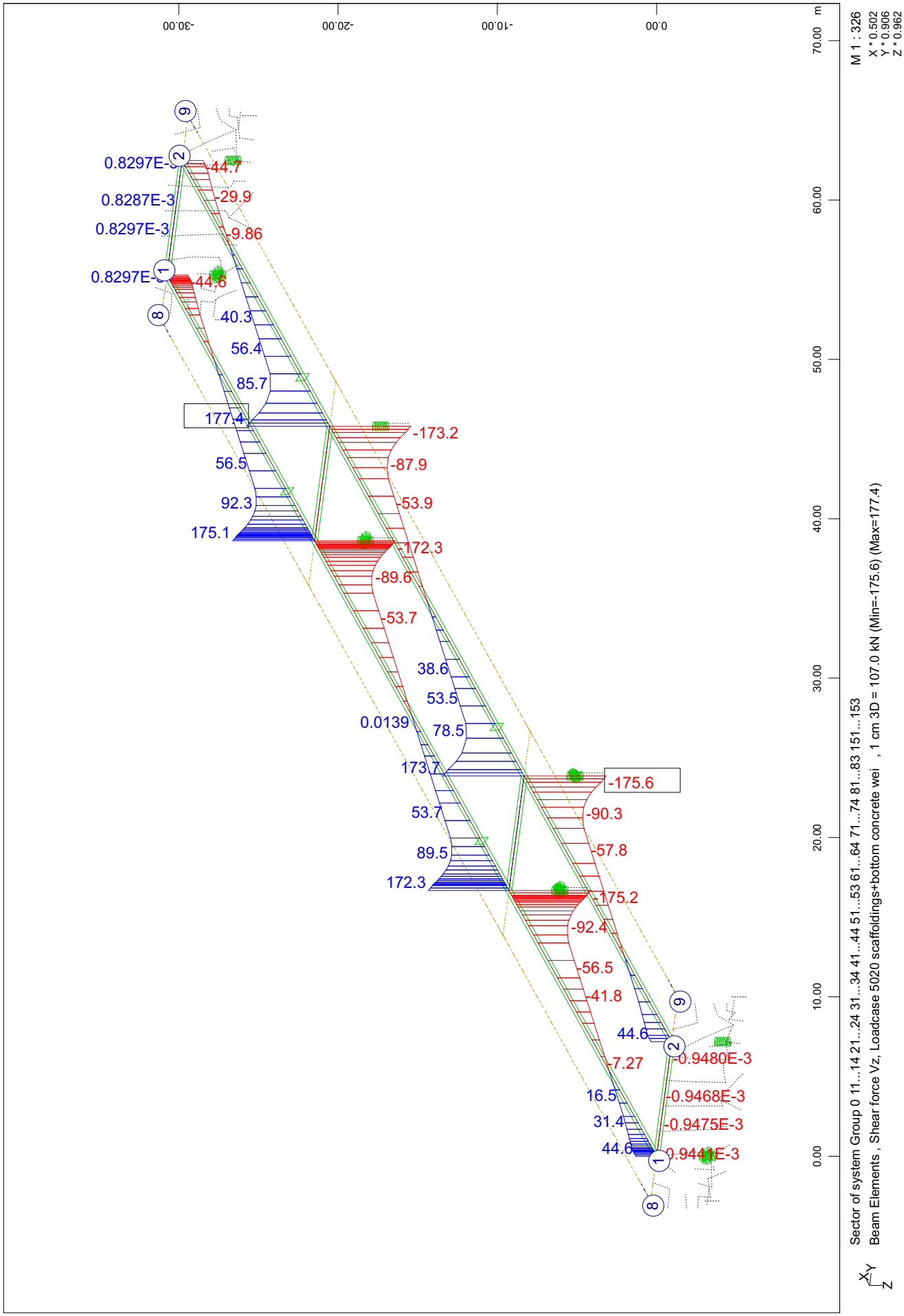

SOFiSTiK AG - www.sofistik.de

Composite bridge 38+50+38, b=14.25m, 2x2HL1100R HISTAR460 , slab 0.30m C30/37

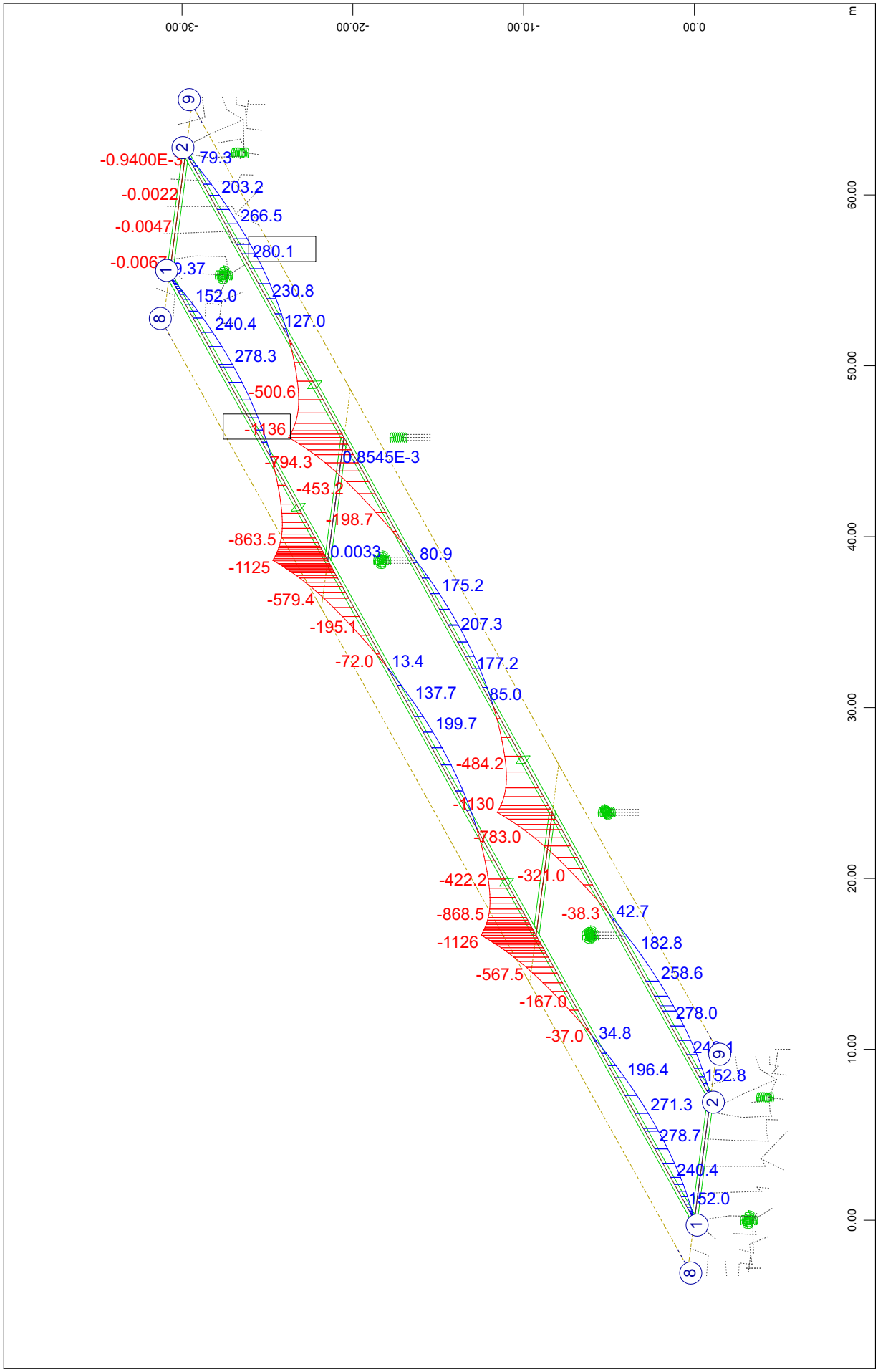

SOFiSTiK AG - www.sofistik.de

Composite bridge 38+50+38, b=14.25m, 2x2HL1100R HISTAR460 , slab 0.30m C30/37

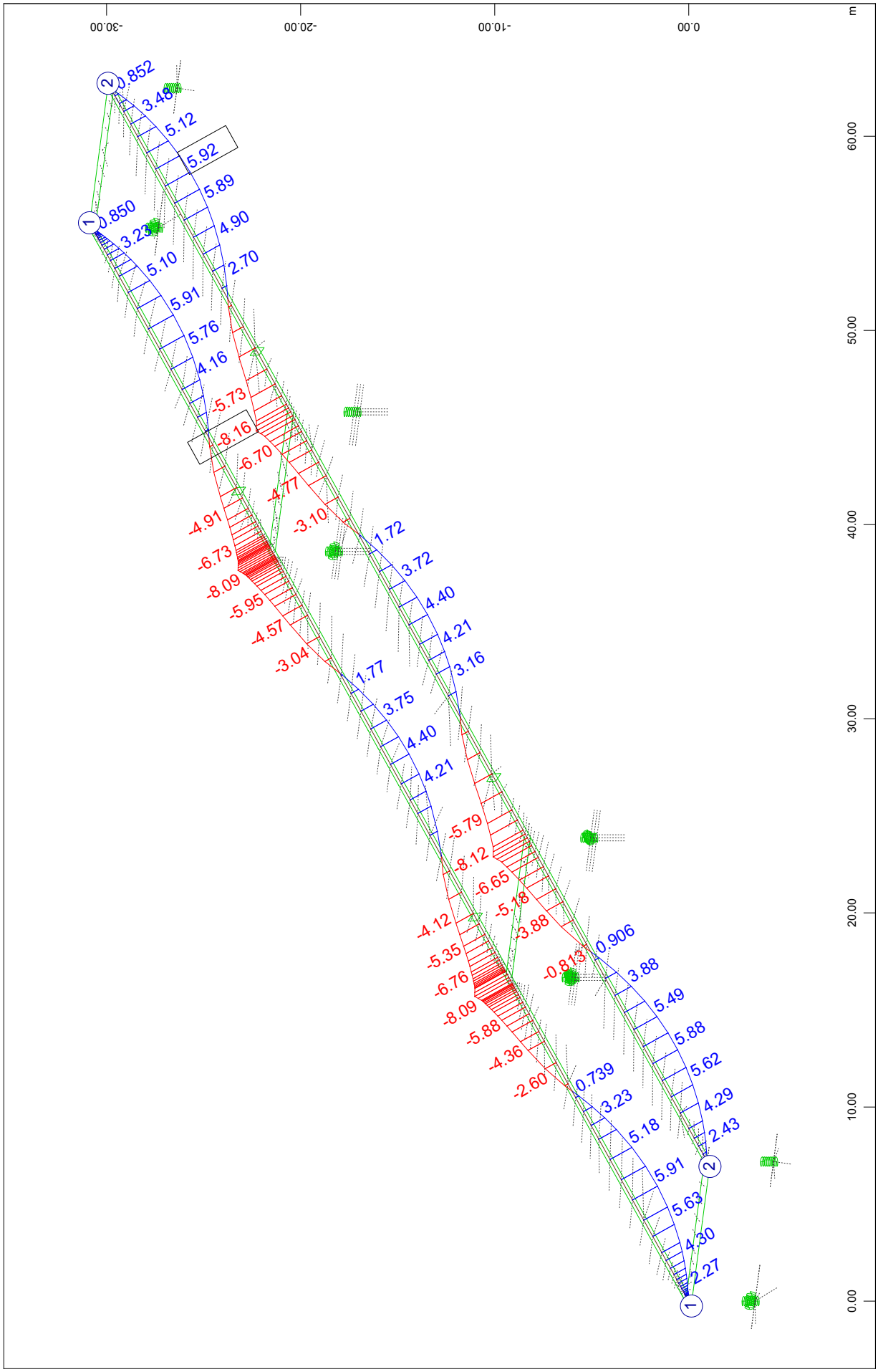

SOFiSTiK AG - www.sofistik.de

Composite bridge 38+50+38, b=14.25m, 2x2HL1100R HISTAR460 , slab 0.30m C30/37

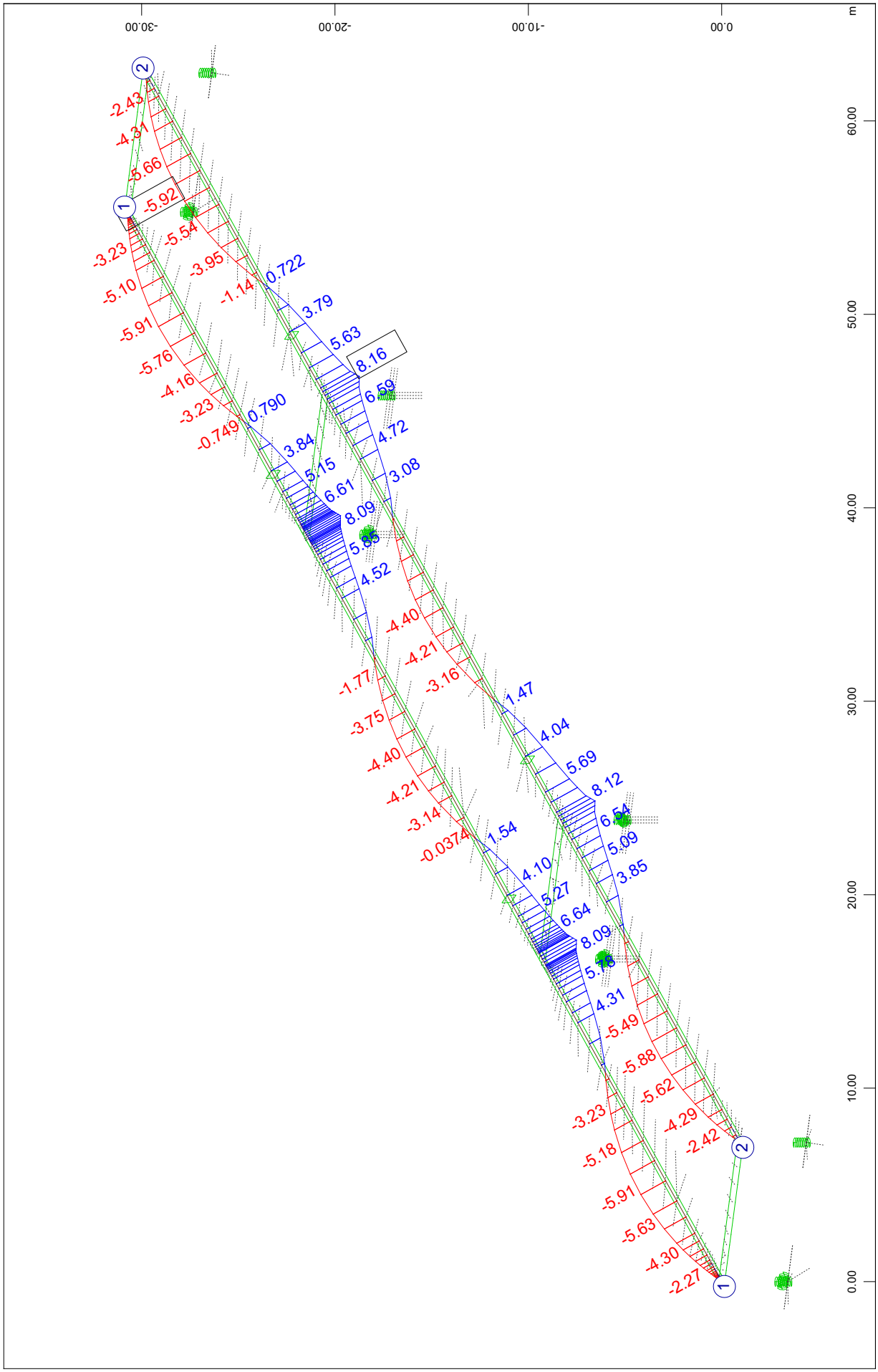

SOFiSTiK AG - www.sofistik.de

Composite bridge 38+50+38, b=14.25m, 2x2HL1100R HISTAR460 , slab 0.30m C30/37

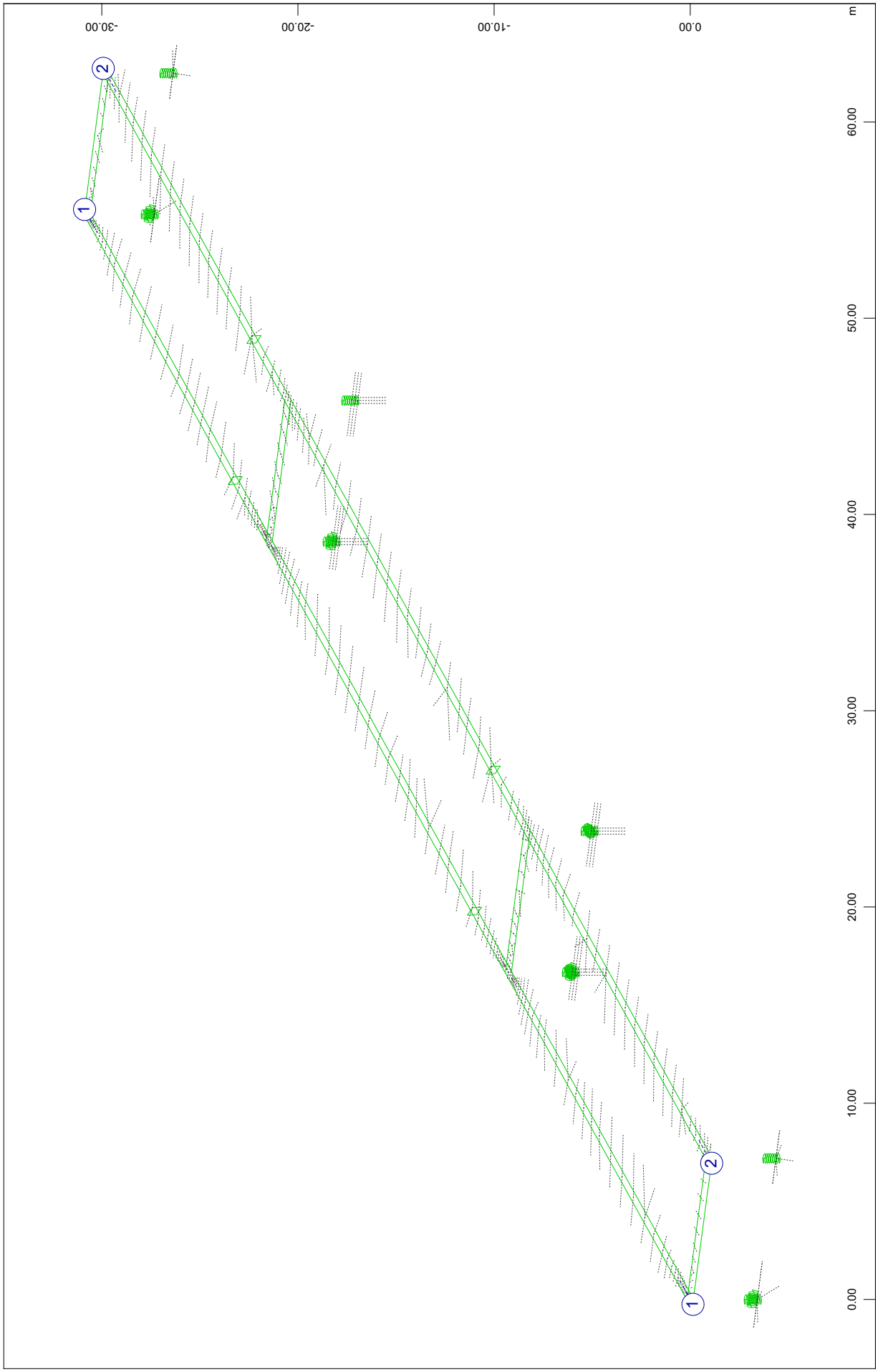

SOFiSTiK AG - www.sofistik.de

```
Composite bridge 38+50+38, b=14.25m, 2x2HL1100R HISTAR460 , slab 0.30m C30/37

+++++ warning no.   807 in program gr3_l_mach
       BEAM TYPE SZPT STYP BEAM design case  7120 not valid : No values found
```

SOFiSTiK AG - www.sofistik.de

Composite bridge 38+50+38, b=14.25m, 2x2HL1100R HISTAR460 , slab 0.30m C30/37

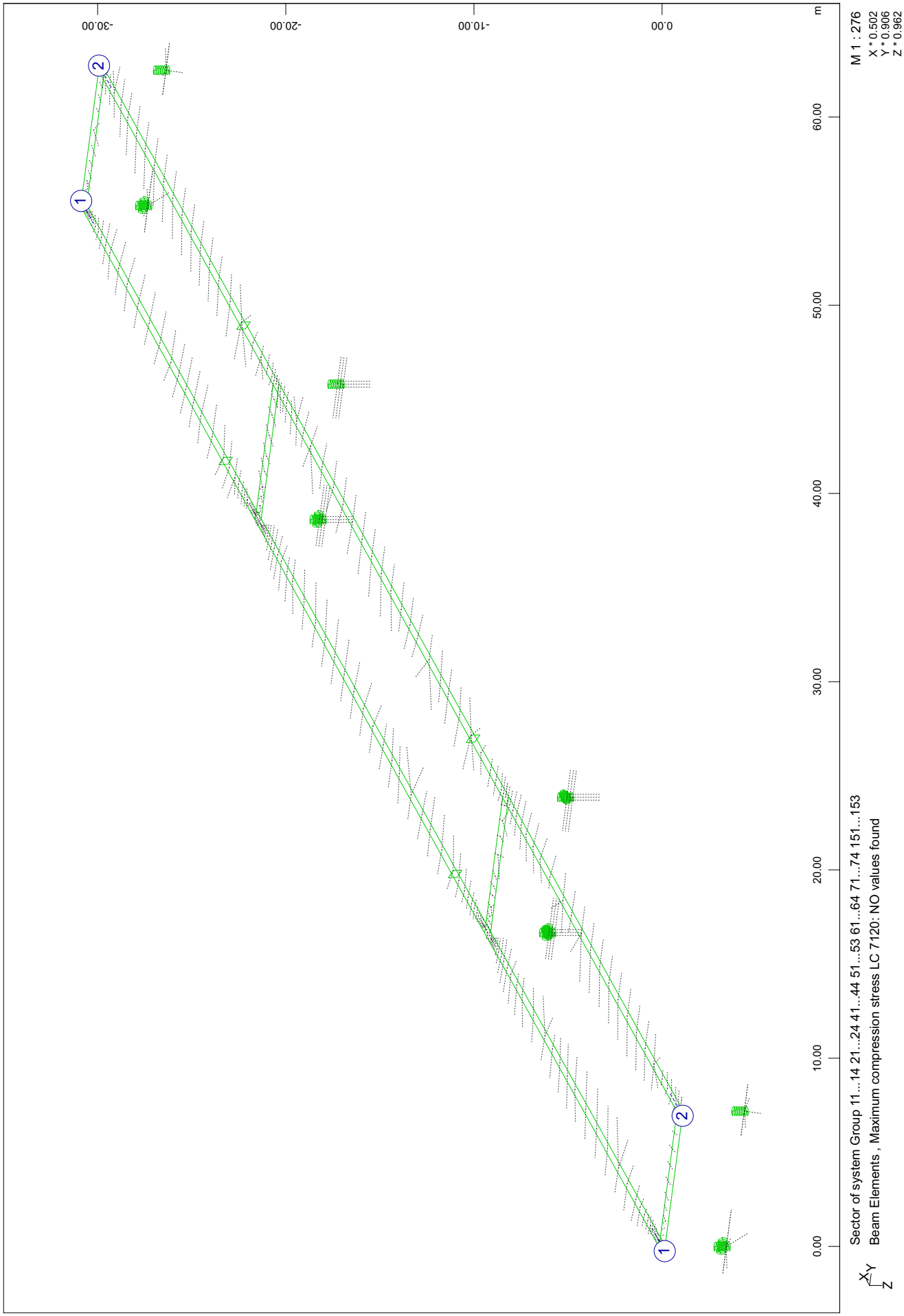

SOFiSTiK AG - www.sofistik.de

```
Composite bridge 38+50+38, b=14.25m, 2x2HL1100R HISTAR460 , slab 0.30m C30/37

+++++ warning no.   807 in program gr3_l_mach
       BEAM TYPE SDPT STYP BEAM design case  7120 not valid : No values found
```

SOFiSTiK AG - www.sofistik.de

Composite bridge 38+50+38, b=14.25m, 2x2HL1100R HISTAR460 , slab 0.30m C30/37

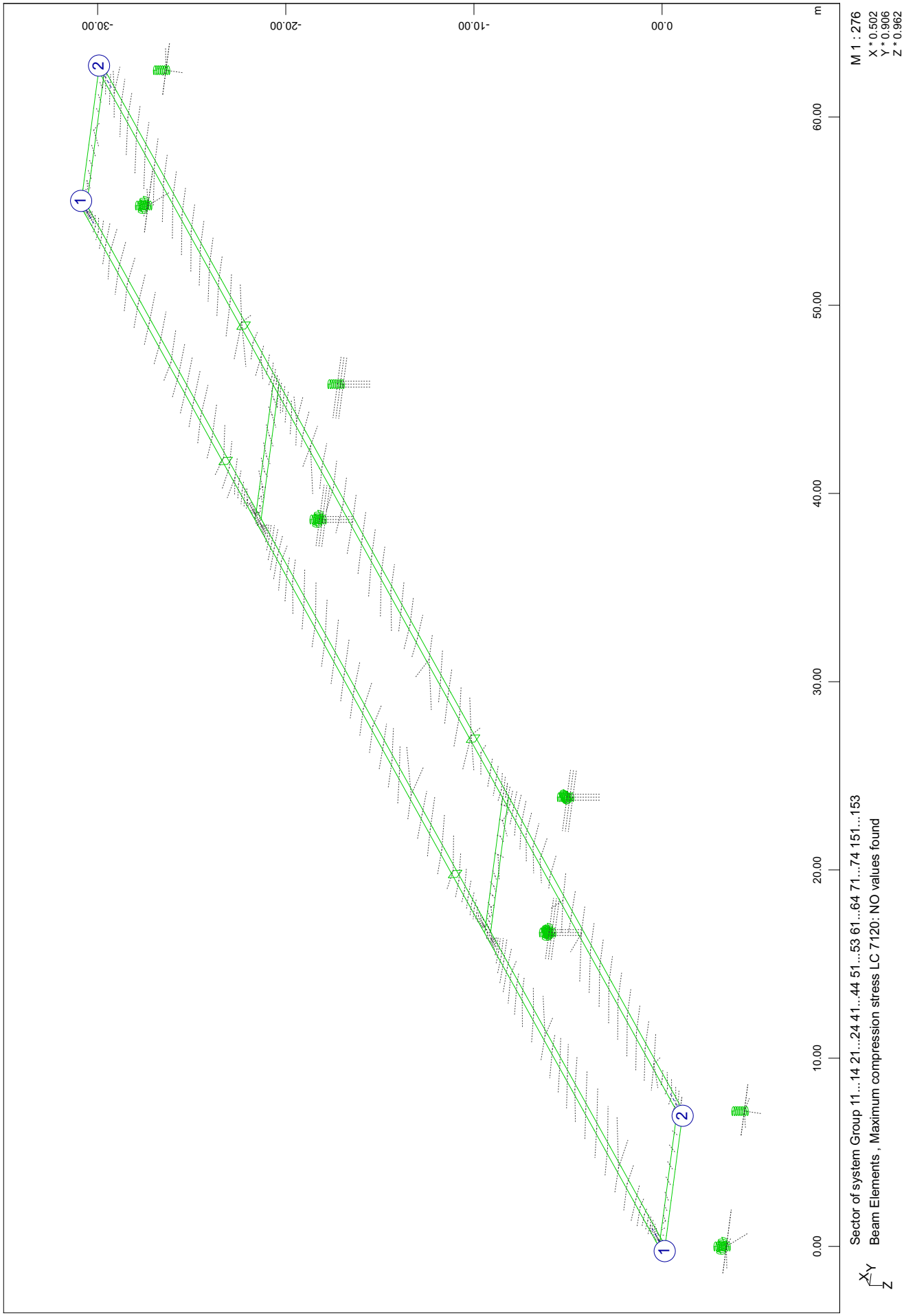

SOFiSTiK AG - www.sofistik.de

```
Composite bridge 38+50+38, b=14.25m, 2x2HL1100R HISTAR460 , slab 0.30m C30/37
Incremental results of CSM stages; CS21: stiffnes of bottom concrete ON

+++++ warning no.   807 in program gr3_l_mach
       BEAM TYPE SDPT STYP BEAM design case  7120 not valid : No values found
```

SOFiSTiK AG - www.sofistik.de

Composite bridge 38+50+38, b=14.25m, 2x2HL1100R HISTAR460 , slab 0.30m C30/37
Incremental results of CSM stages; CS21: stiffnes of bottom concrete ON

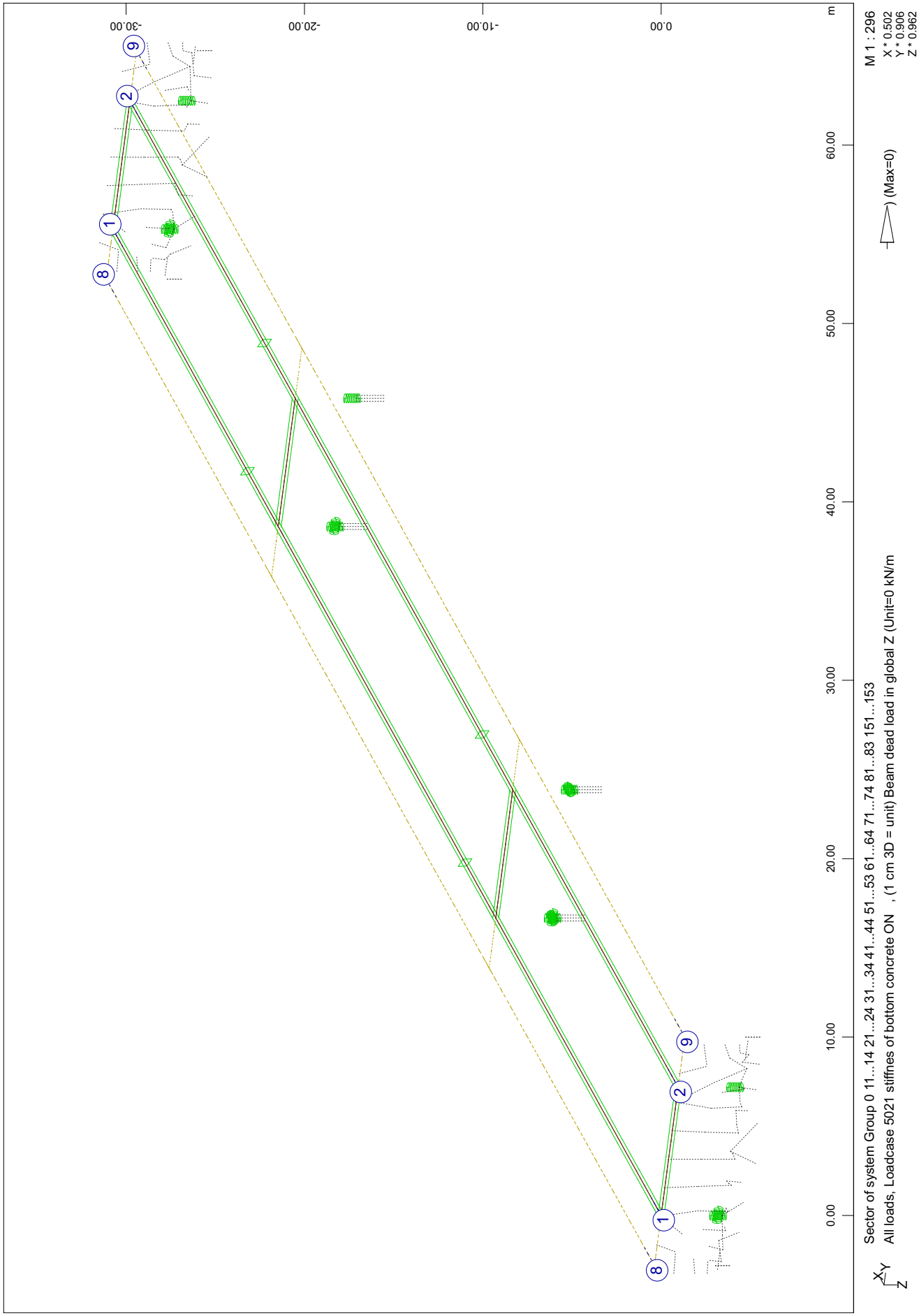

SOFiSTiK AG - www.sofistik.de

Composite bridge 38+50+38, b=14.25m, 2x2HL1100R HISTAR460 , slab 0.30m C30/37

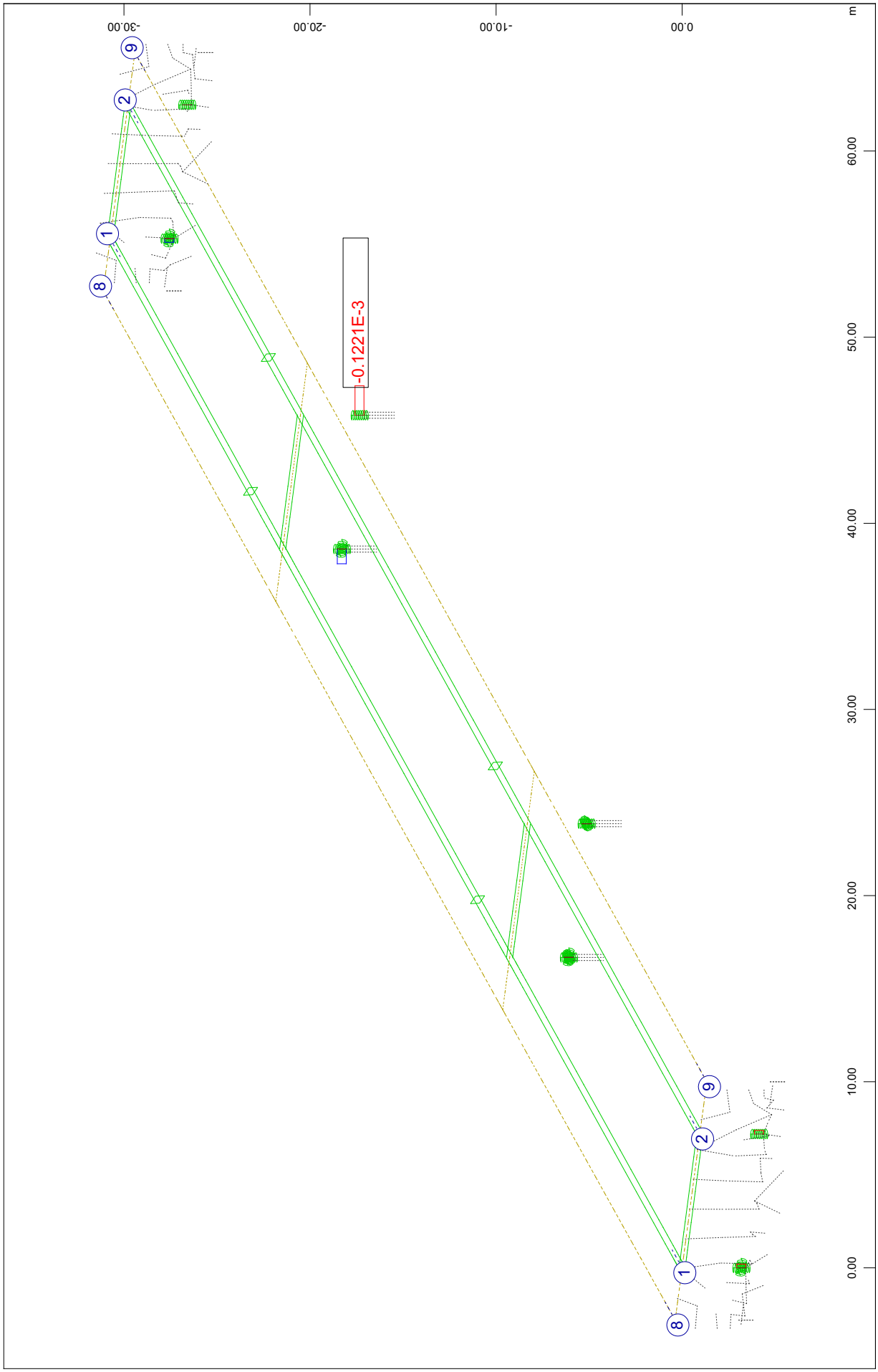

SOFiSTiK AG - www.sofistik.de

Composite bridge 38+50+38, b=14.25m, 2x2HL1100R HISTAR460 , slab 0.30m C30/37

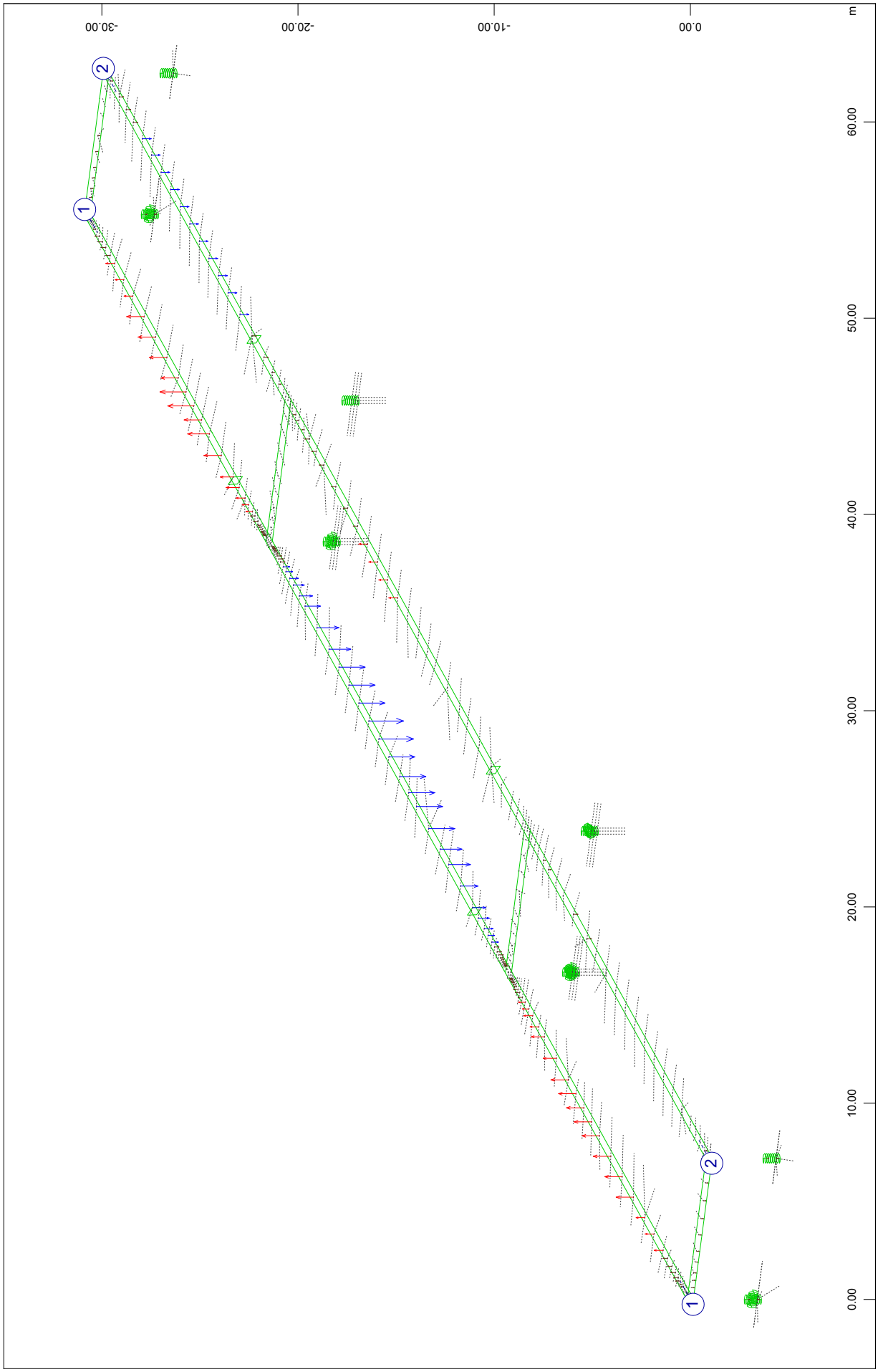

SOFiSTiK AG - www.sofistik.de

Composite bridge 38+50+38, b=14.25m, 2x2HL1100R HISTAR460 , slab 0.30m C30/37

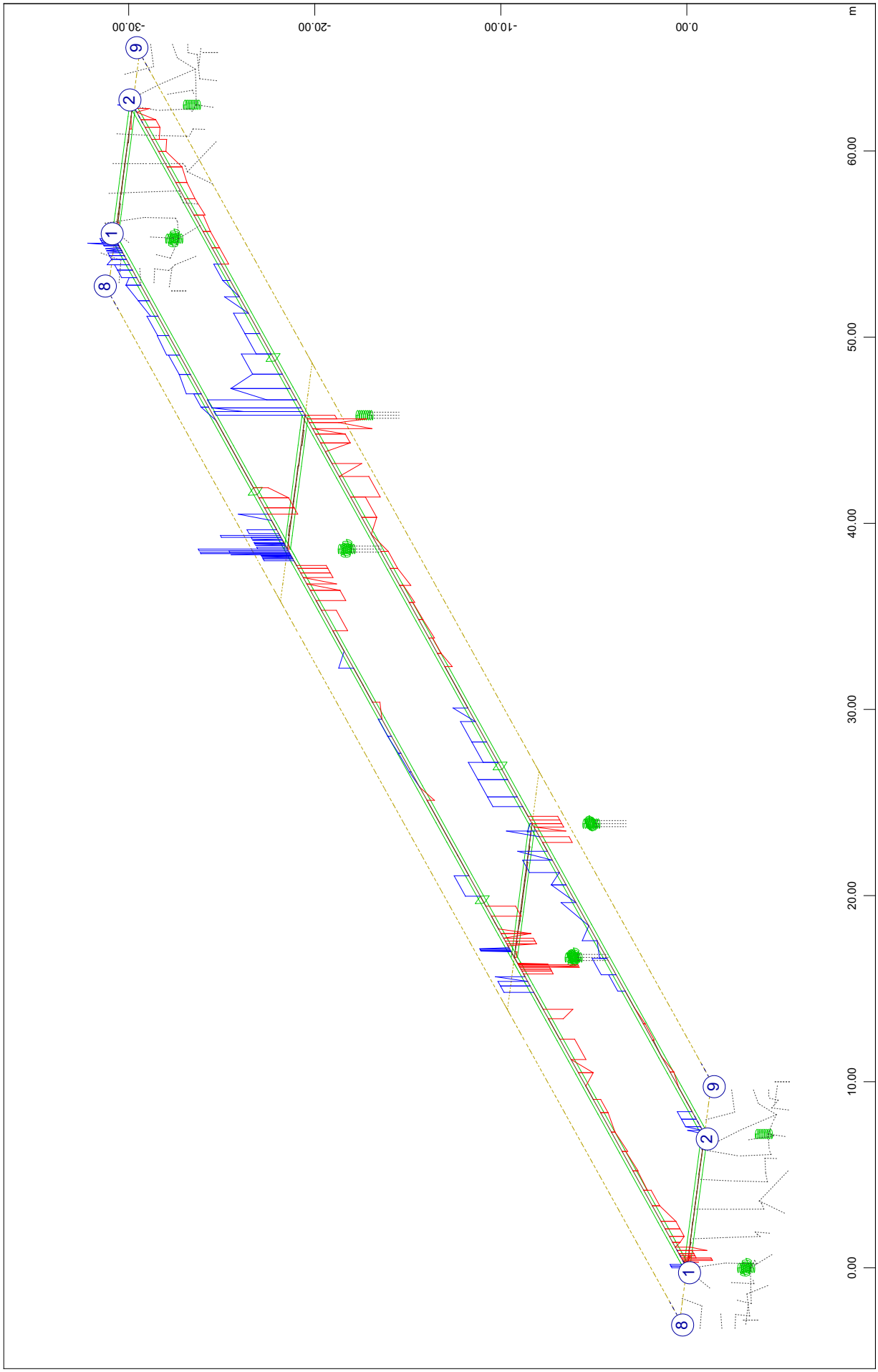

SOFiSTiK AG - www.sofistik.de

Composite bridge 38+50+38, b=14.25m, 2x2HL1100R HISTAR460 , slab 0.30m C30/37

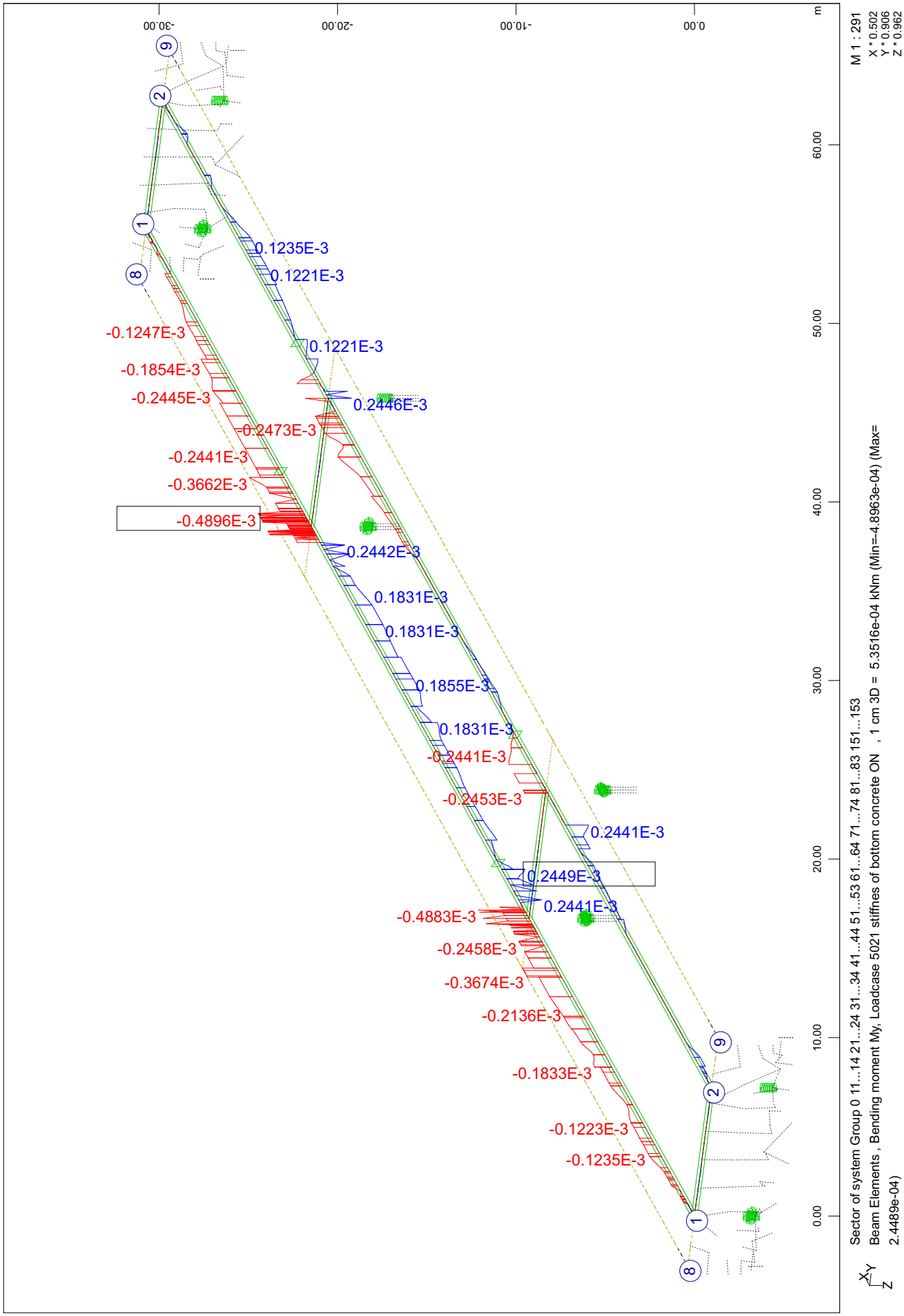

SOFiSTiK AG - www.sofistik.de

Composite bridge 38+50+38, b=14.25m, 2x2HL1100R HISTAR460 , slab 0.30m C30/37

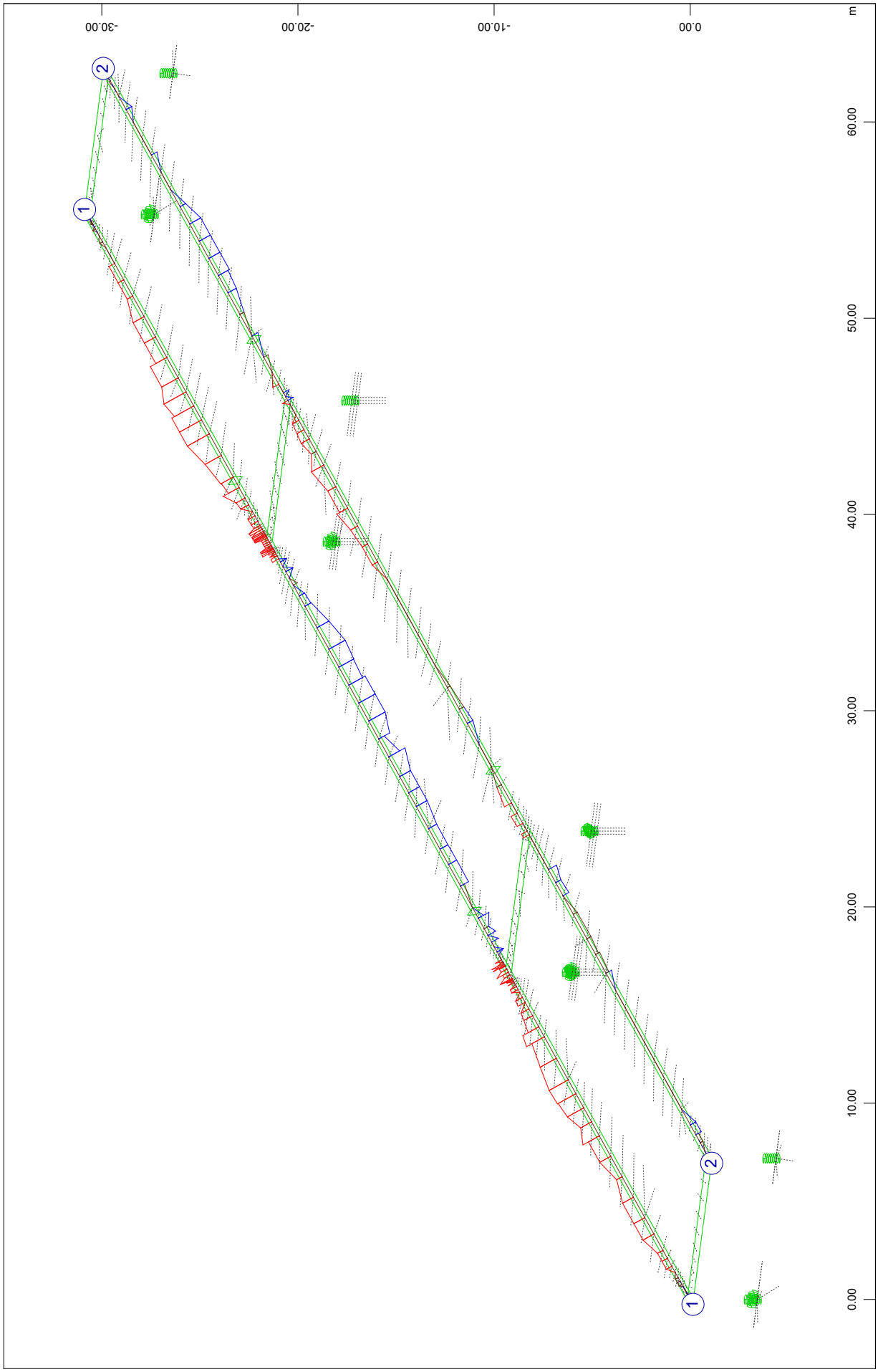

SOFiSTiK AG - www.sofistik.de

Composite bridge 38+50+38, b=14.25m, 2x2HL1100R HISTAR460 , slab 0.30m C30/37

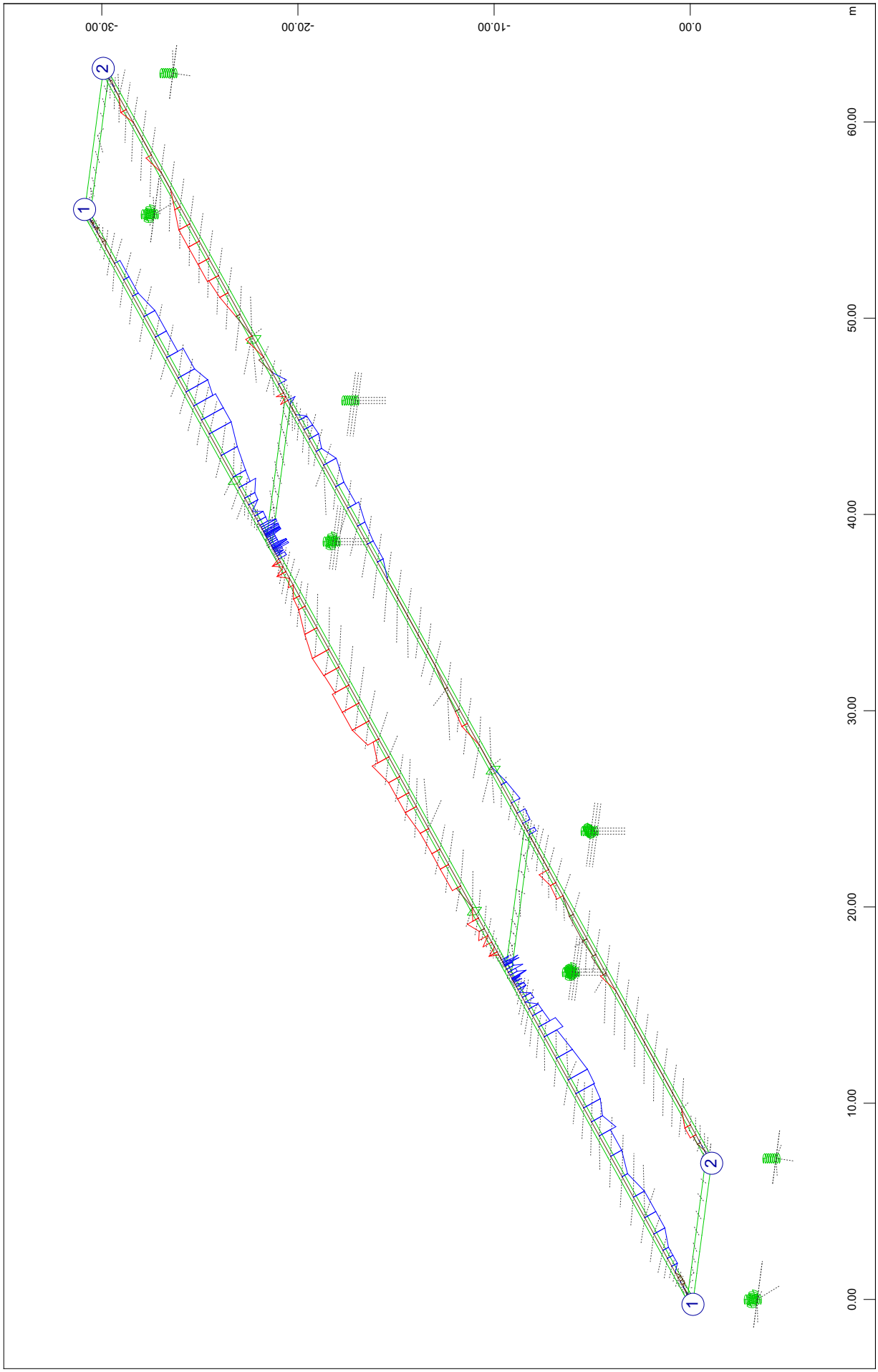

SOFiSTiK AG - www.sofistik.de

Composite bridge 38+50+38, b=14.25m, 2x2HL1100R HISTAR460 , slab 0.30m C30/37

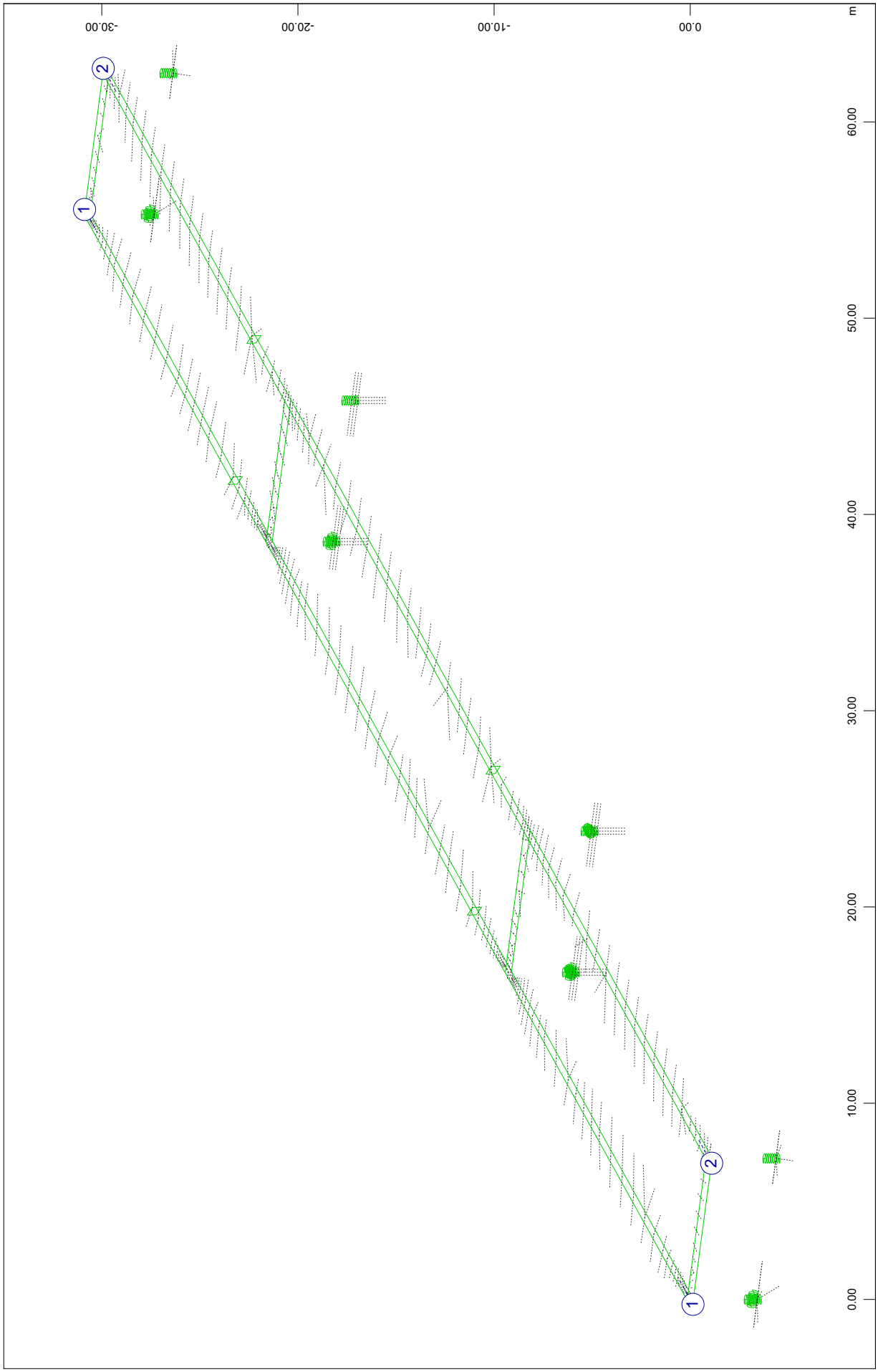

SOFiSTiK AG - www.sofistik.de

```
Composite bridge 38+50+38, b=14.25m, 2x2HL1100R HISTAR460 , slab 0.30m C30/37

+++++ warning no.   807 in program gr3_l_mach
       BEAM TYPE SZPT STYP BEAM design case  7121 not valid : No values found
```

SOFiSTiK AG - www.sofistik.de

Composite bridge 38+50+38, b=14.25m, 2x2HL1100R HISTAR460 , slab 0.30m C30/37

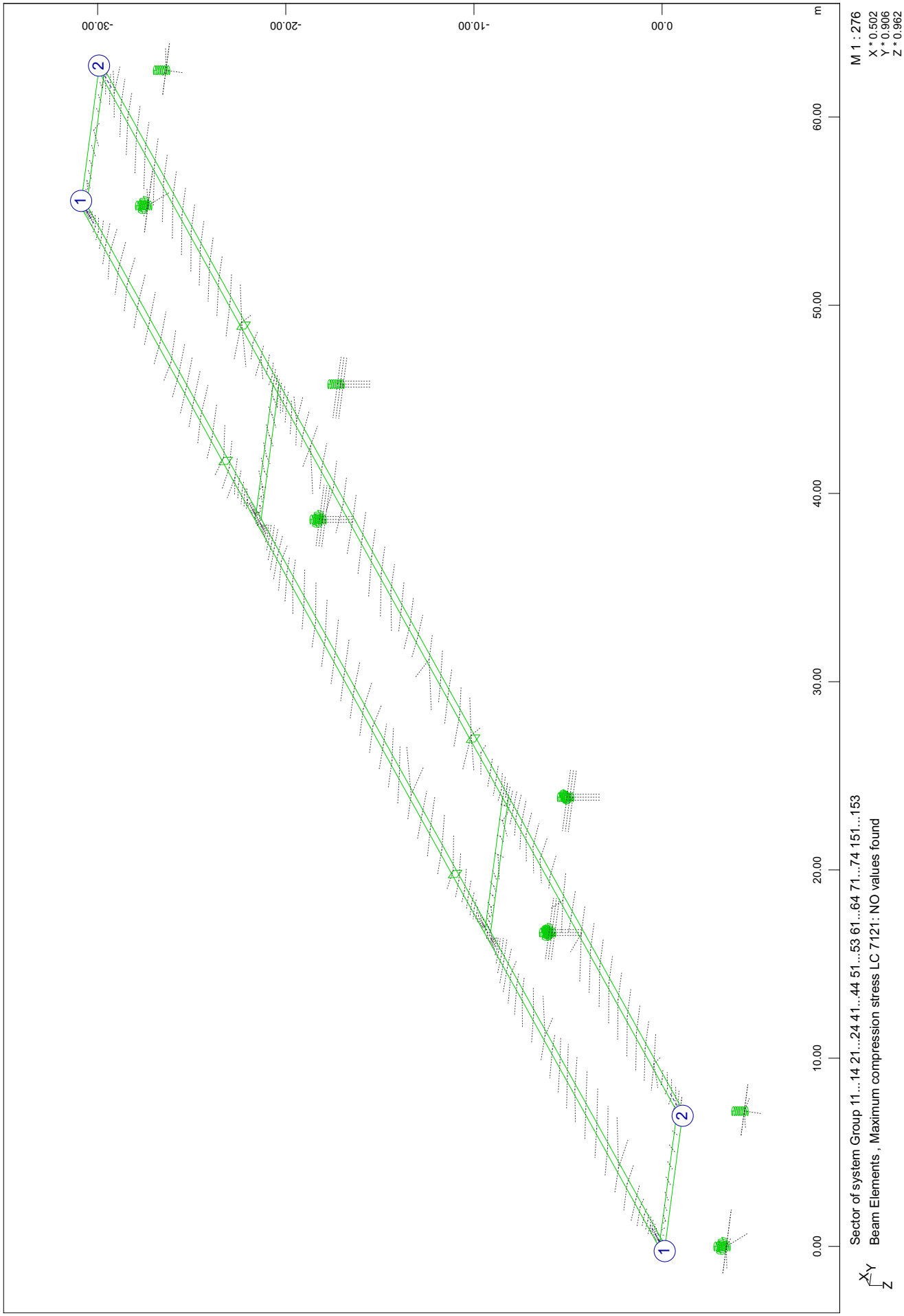

SOFiSTiK AG - www.sofistik.de

```
Composite bridge 38+50+38, b=14.25m, 2x2HL1100R HISTAR460 , slab 0.30m C30/37

+++++ warning no.   807 in program gr3_l_mach
       BEAM TYPE SDPT STYP BEAM design case  7121 not valid : No values found
```

SOFiSTiK AG - www.sofistik.de

Composite bridge 38+50+38, b=14.25m, 2x2HL1100R HISTAR460 , slab 0.30m C30/37

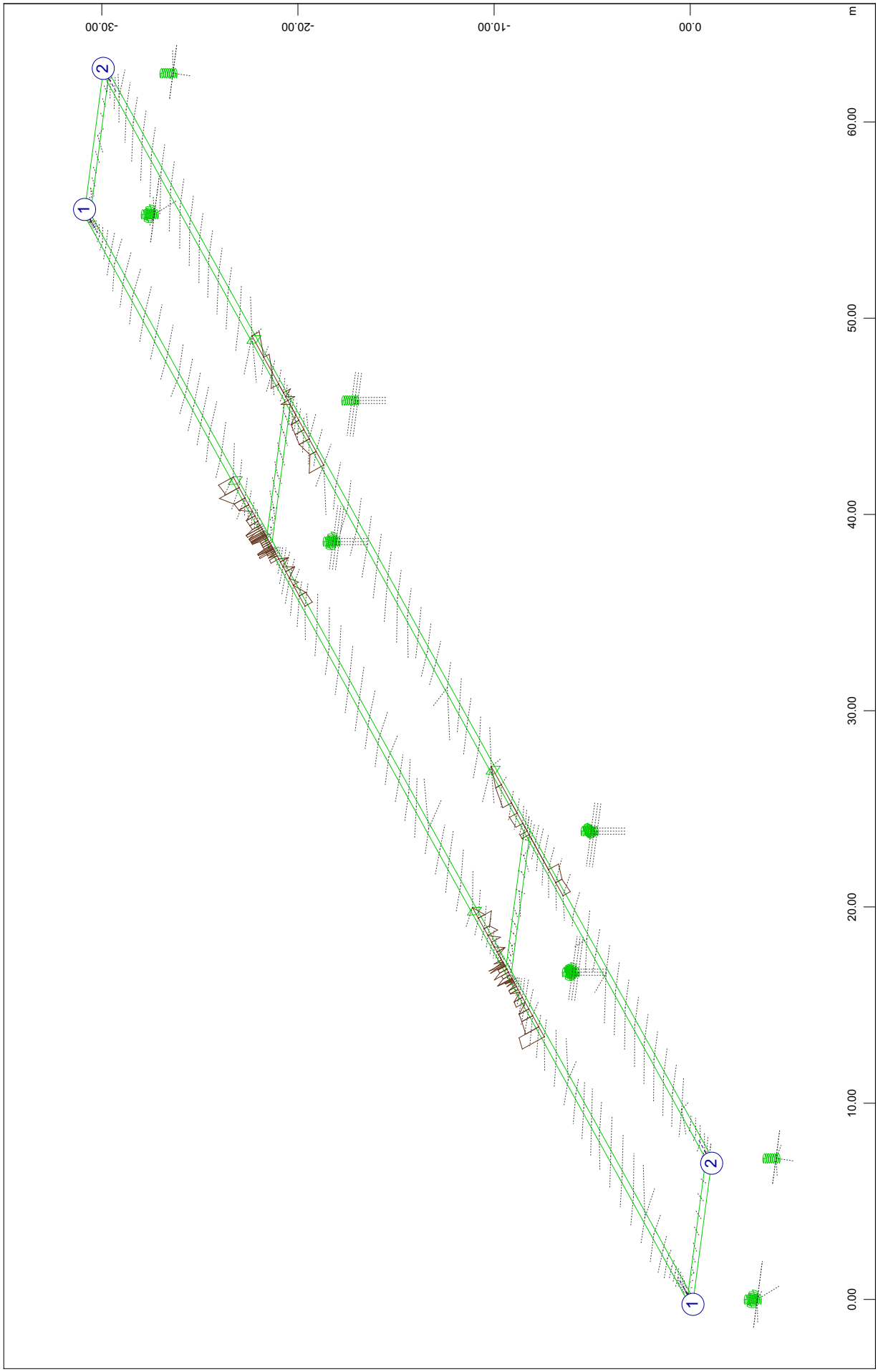

SOFiSTiK AG - www.sofistik.de

Composite bridge 38+50+38, b=14.25m, 2x2HL1100R HISTAR460 , slab 0.30m C30/37
Incremental results of CSM stages; CS25: C+S bottom concrete 28days

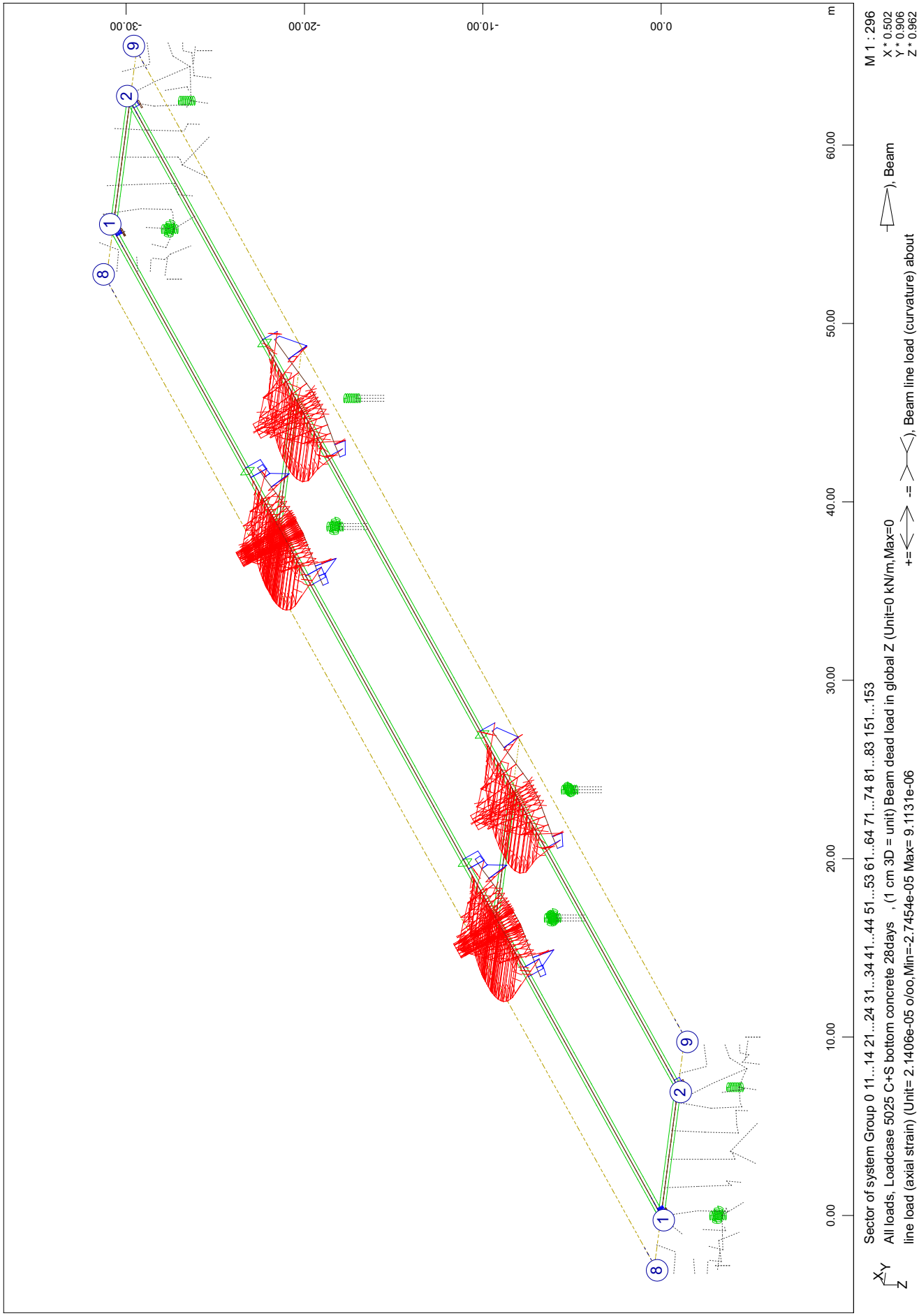

SOFiSTiK AG - www.sofistik.de

Composite bridge 38+50+38, b=14.25m, 2x2HL1100R HISTAR460 , slab 0.30m C30/37

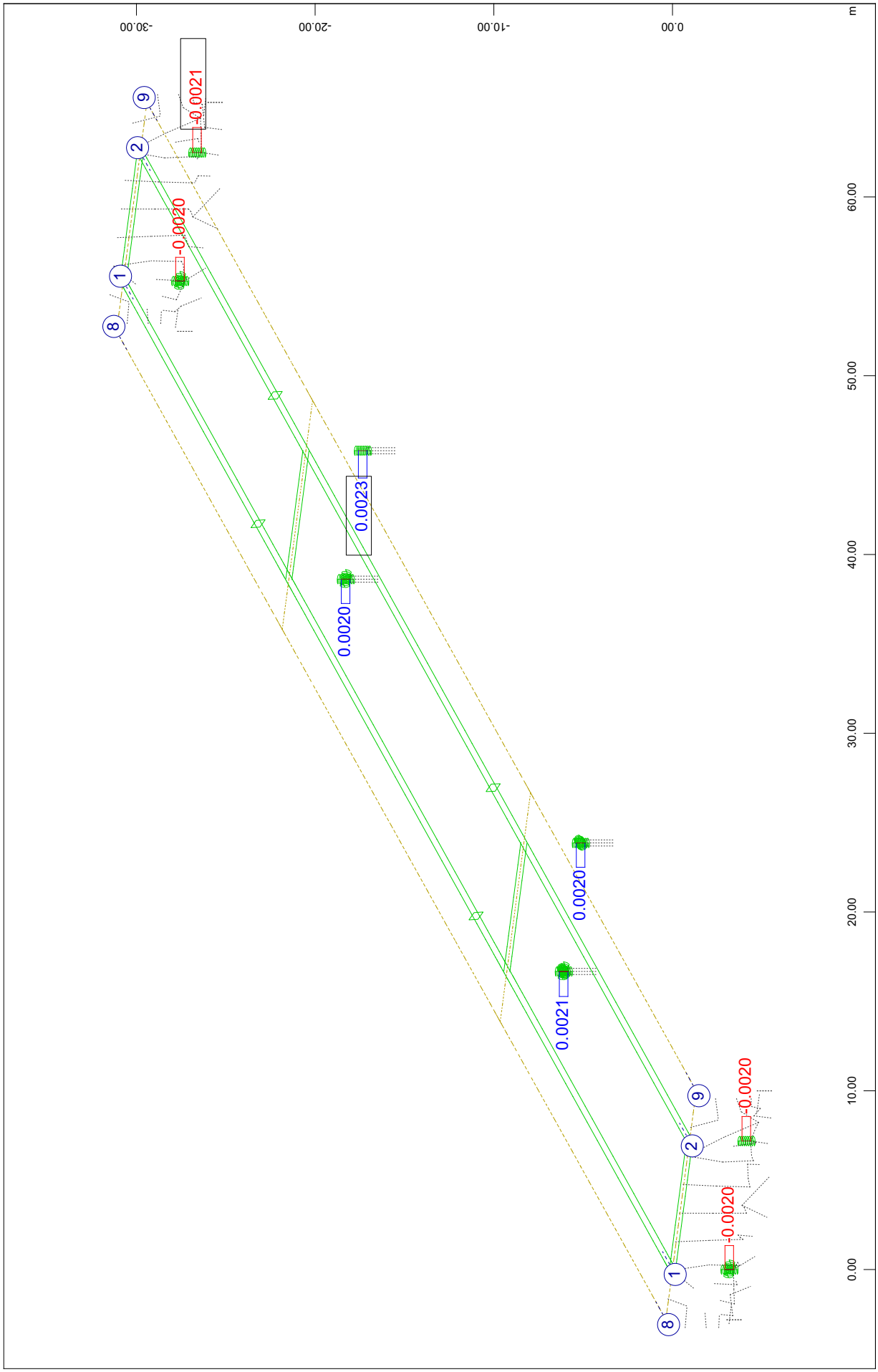

Sector of system Group 0 11...14 21...24 31...34 41...44 51...53 61...64 71...74 81...83 151...153
Spring force in global Z, Loadcase 5025 C+S bottom concrete 28days , 1 cm 3D = 0.0045 kN (Min=-0.0021) (Max=0.0023) (total: 3.0518e-04)

SOFiSTiK AG - www.sofistik.de

Composite bridge 38+50+38, b=14.25m, 2x2HL1100R HISTAR460 , slab 0.30m C30/37

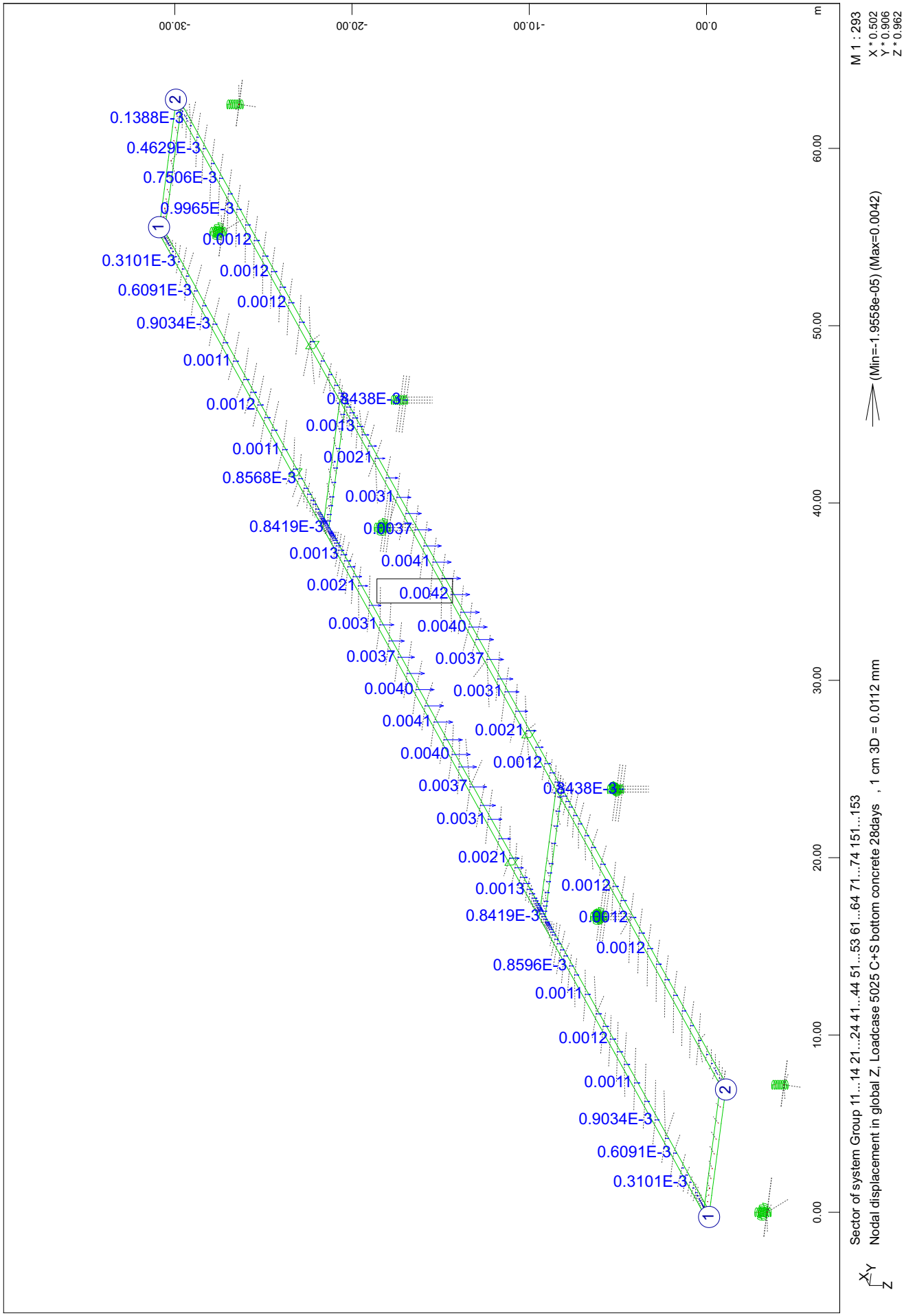

SOFiSTiK AG - www.sofistik.de

Composite bridge 38+50+38, b=14.25m, 2x2HL1100R HISTAR460 , slab 0.30m C30/37

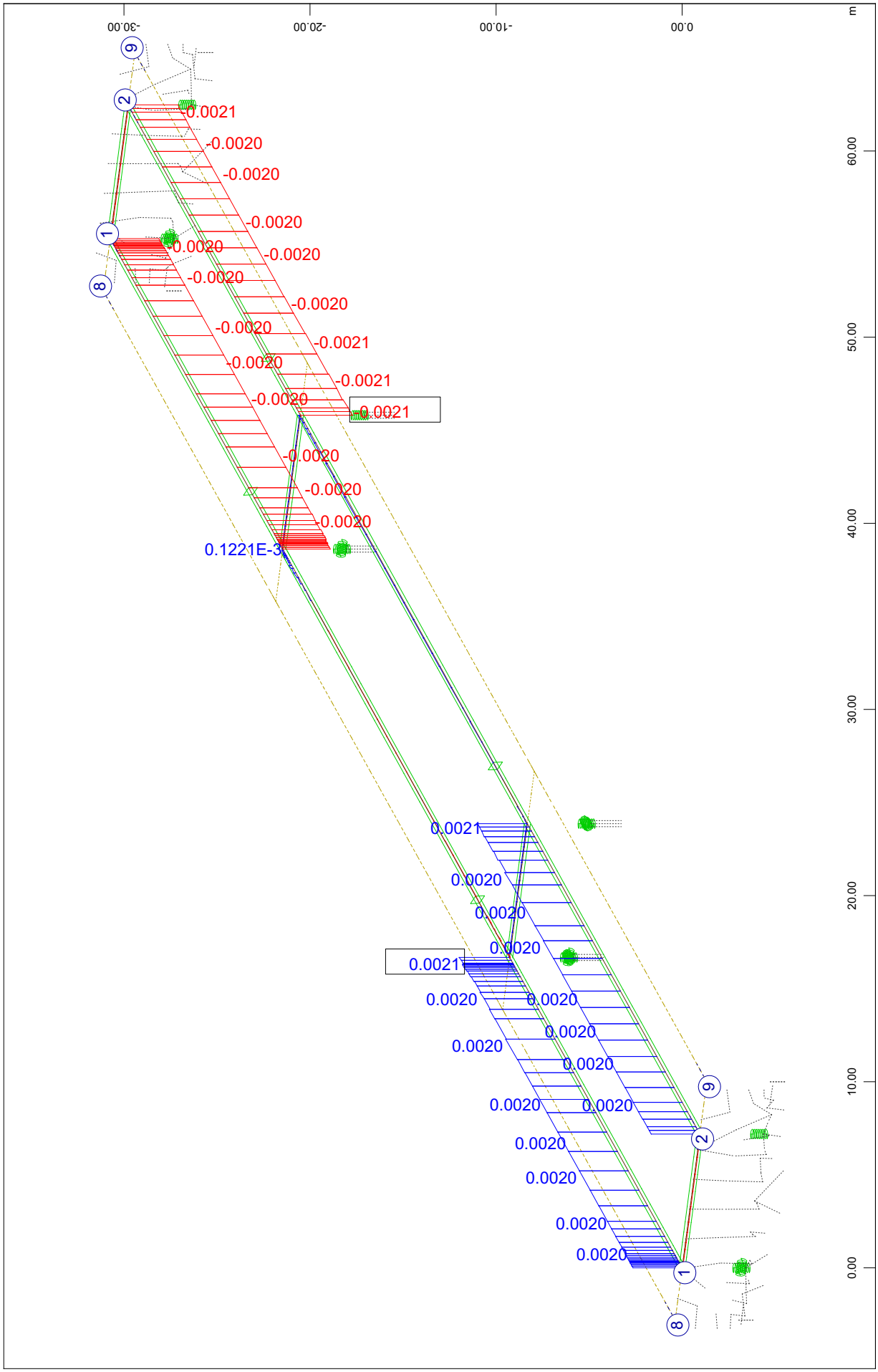

SOFiSTiK AG - www.sofistik.de

Composite bridge 38+50+38, b=14.25m, 2x2HL1100R HISTAR460 , slab 0.30m C30/37

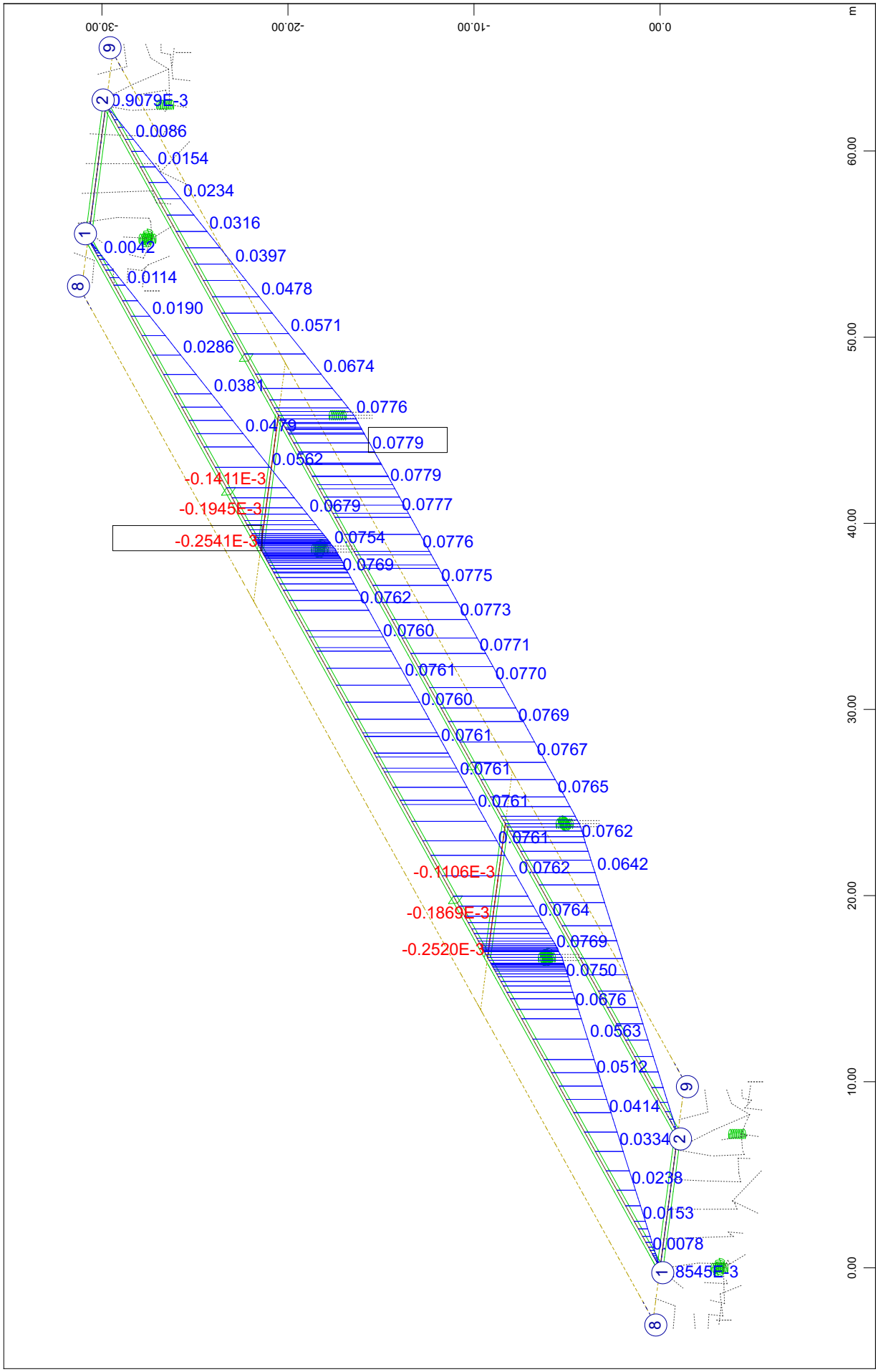

Composite bridge 38+50+38, b=14.25m, 2x2HL1100R HISTAR460 , slab 0.30m C30/37

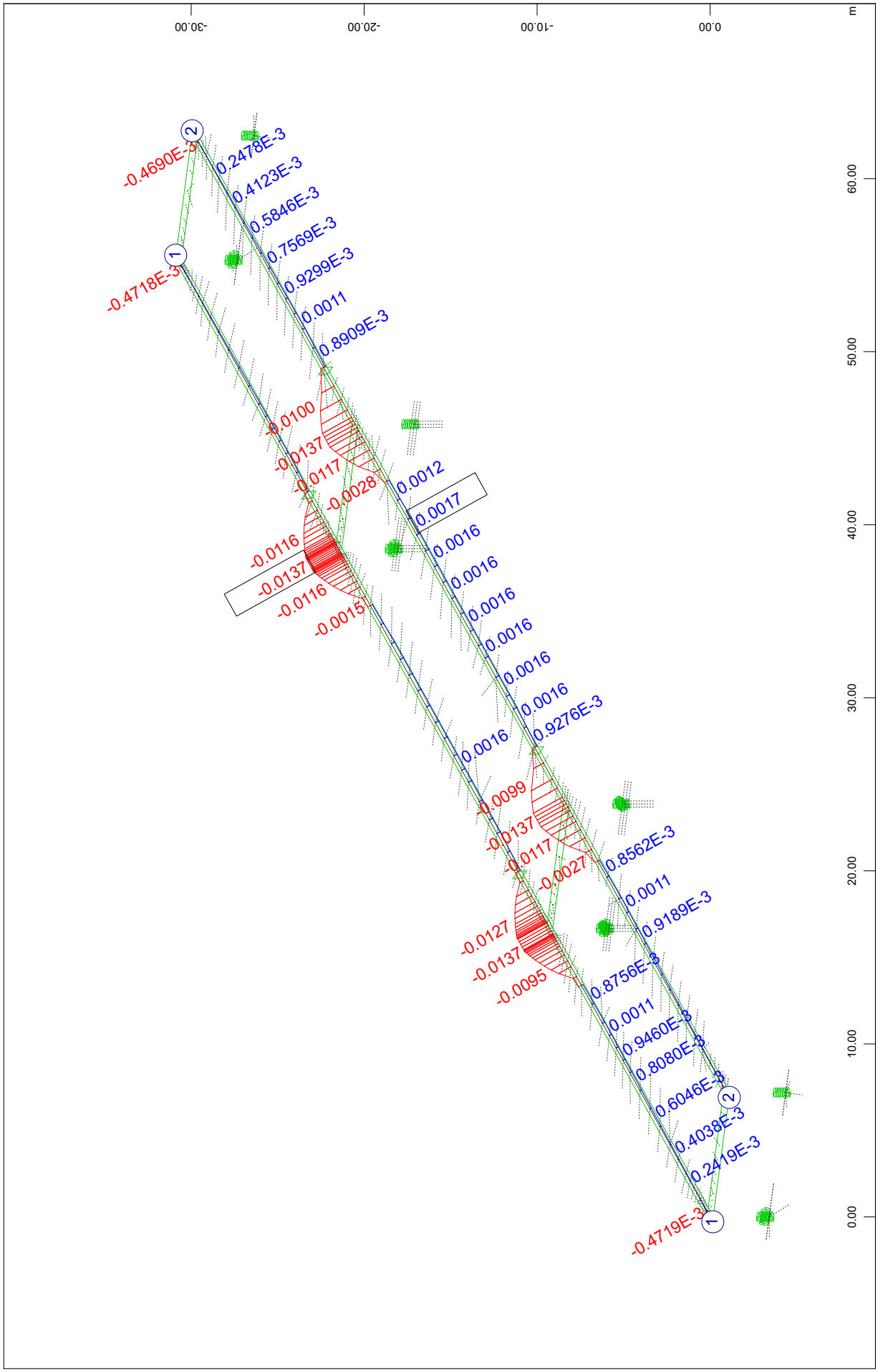

SOFiSTiK AG - www.sofistik.de

Composite bridge 38+50+38, b=14.25m, 2x2HL1100R HISTAR460 , slab 0.30m C30/37

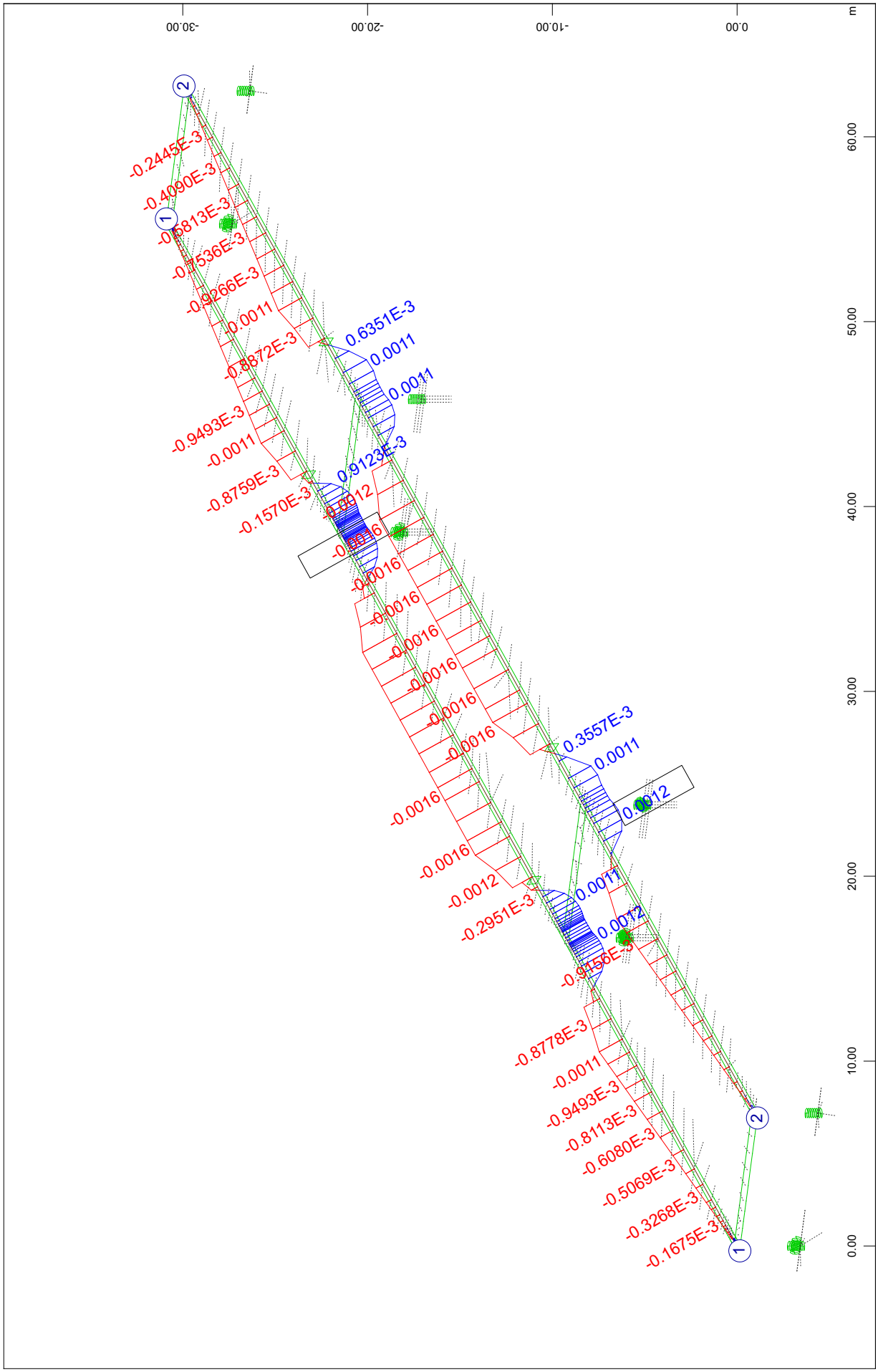

SOFiSTiK AG - www.sofistik.de

Composite bridge 38+50+38, b=14.25m, 2x2HL1100R HISTAR460 , slab 0.30m C30/37

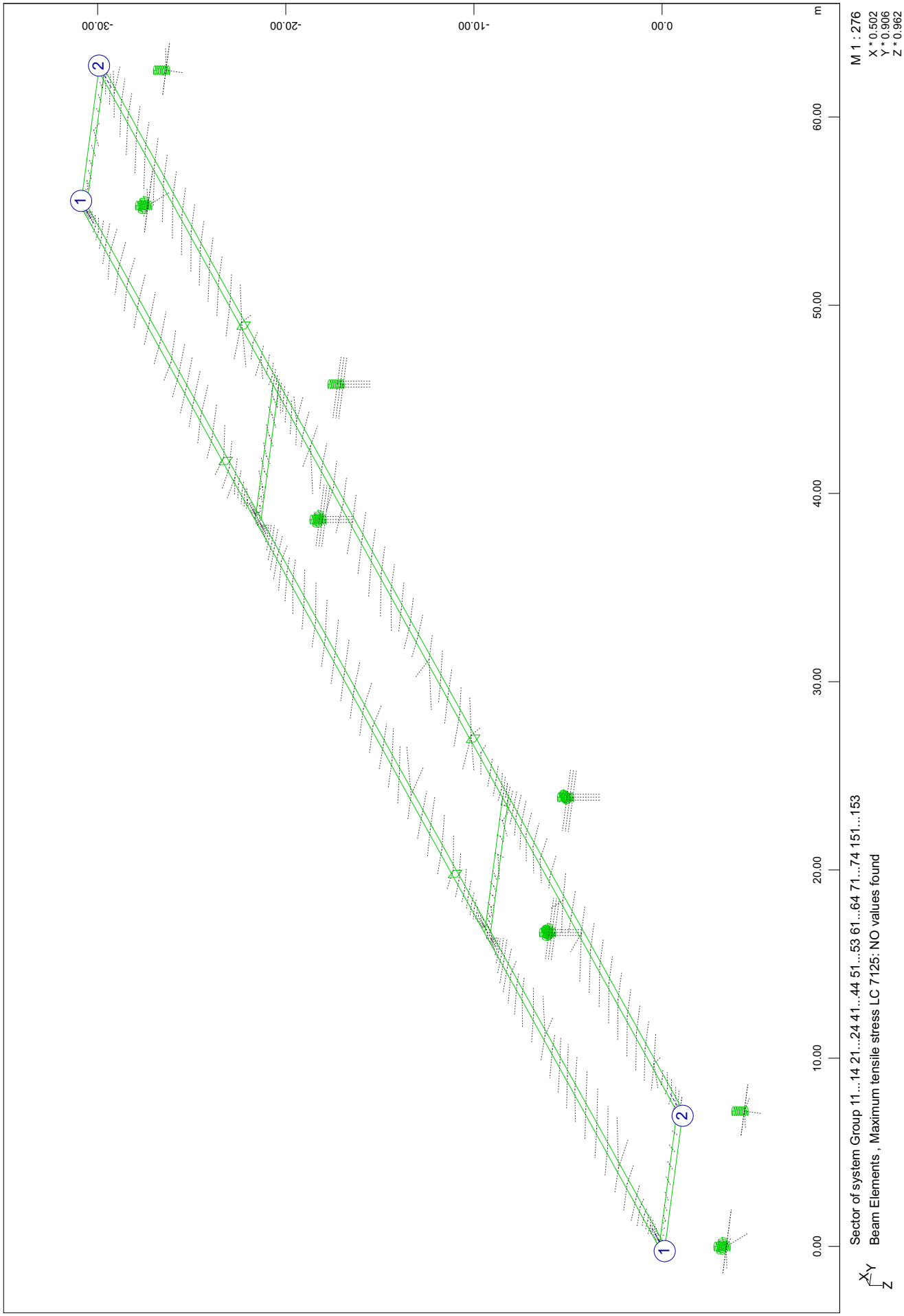

SOFiSTiK AG - www.sofistik.de

```
Composite bridge 38+50+38, b=14.25m, 2x2HL1100R HISTAR460 , slab 0.30m C30/37

+++++ warning no.   807 in program gr3_l_mach
       BEAM TYPE SZPT STYP BEAM design case  7125 not valid : No values found
```

SOFiSTiK AG - www.sofistik.de

Composite bridge 38+50+38, b=14.25m, 2x2HL1100R HISTAR460 , slab 0.30m C30/37

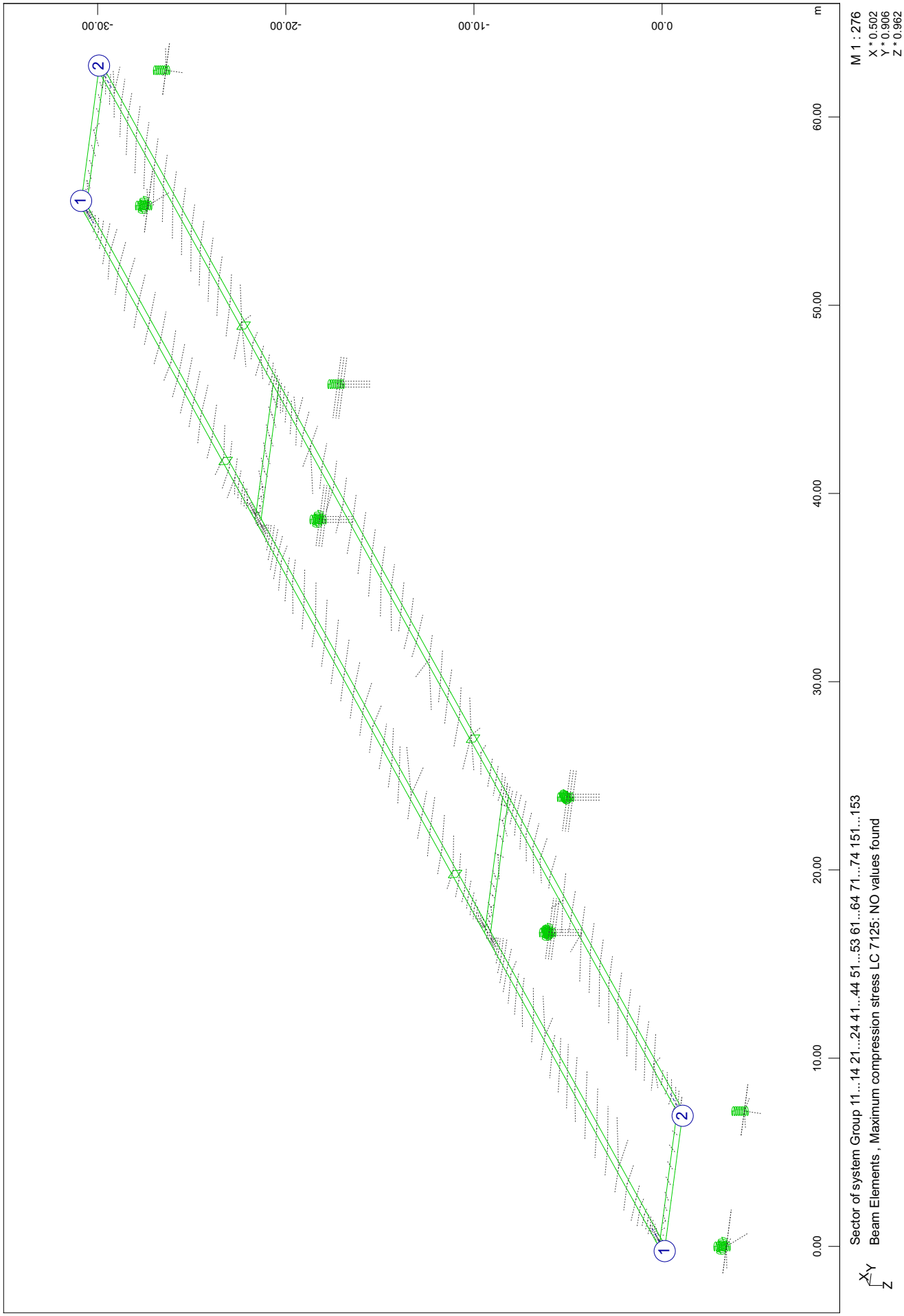

SOFiSTiK AG - www.sofistik.de

```
Composite bridge 38+50+38, b=14.25m, 2x2HL1100R HISTAR460 , slab 0.30m C30/37

+++++ warning no.   807 in program gr3_l_mach
       BEAM TYPE SDPT STYP BEAM design case  7125 not valid : No values found
```

SOFiSTiK AG - www.sofistik.de

Composite bridge 38+50+38, b=14.25m, 2x2HL1100R HISTAR460 , slab 0.30m C30/37

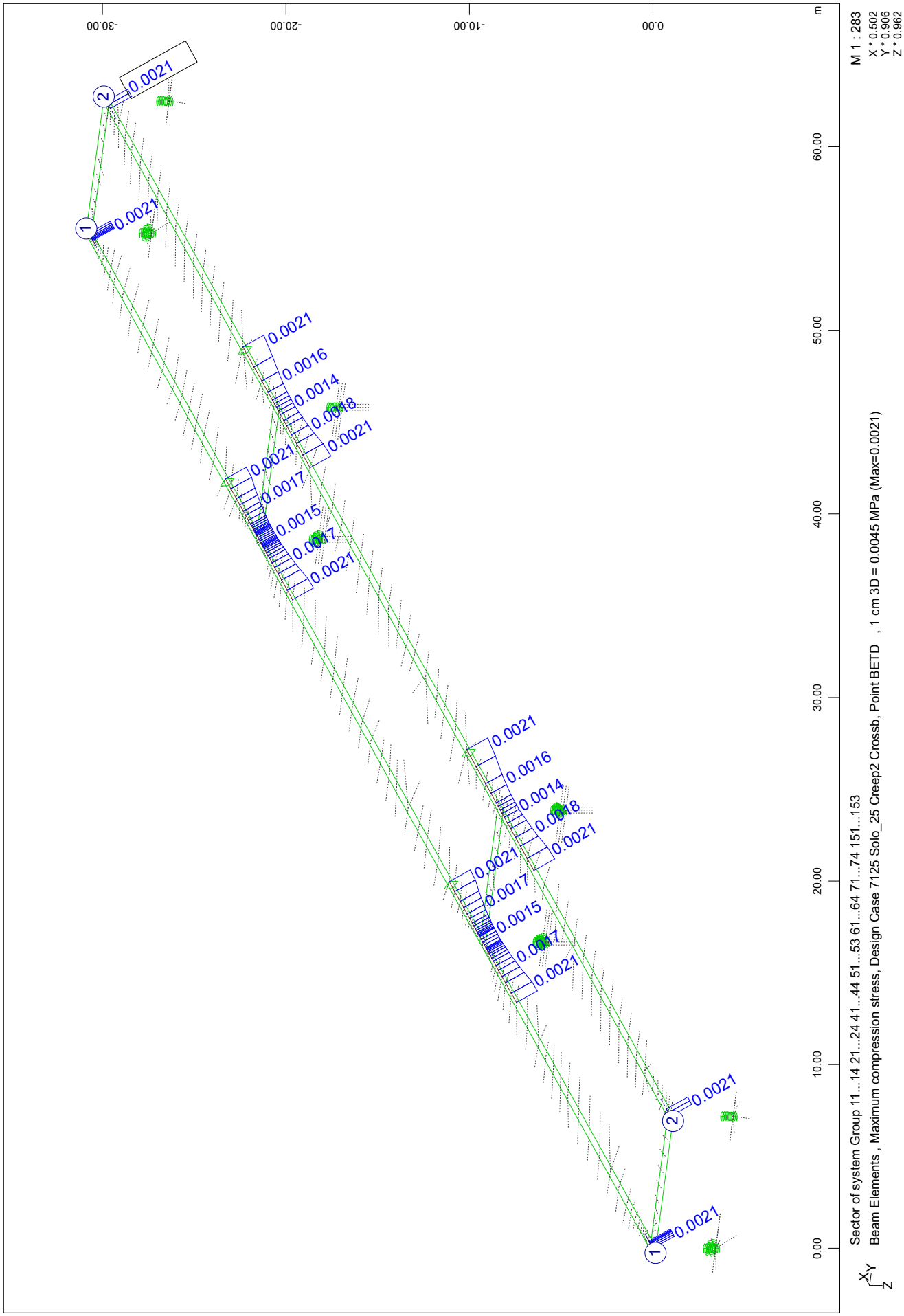

SOFiSTiK AG - www.sofistik.de

Composite bridge 38+50+38, b=14.25m, 2x2HL1100R HISTAR460 , slab 0.30m C30/37
Incremental results of CSM stages; CS26: zero step for consistency reasons

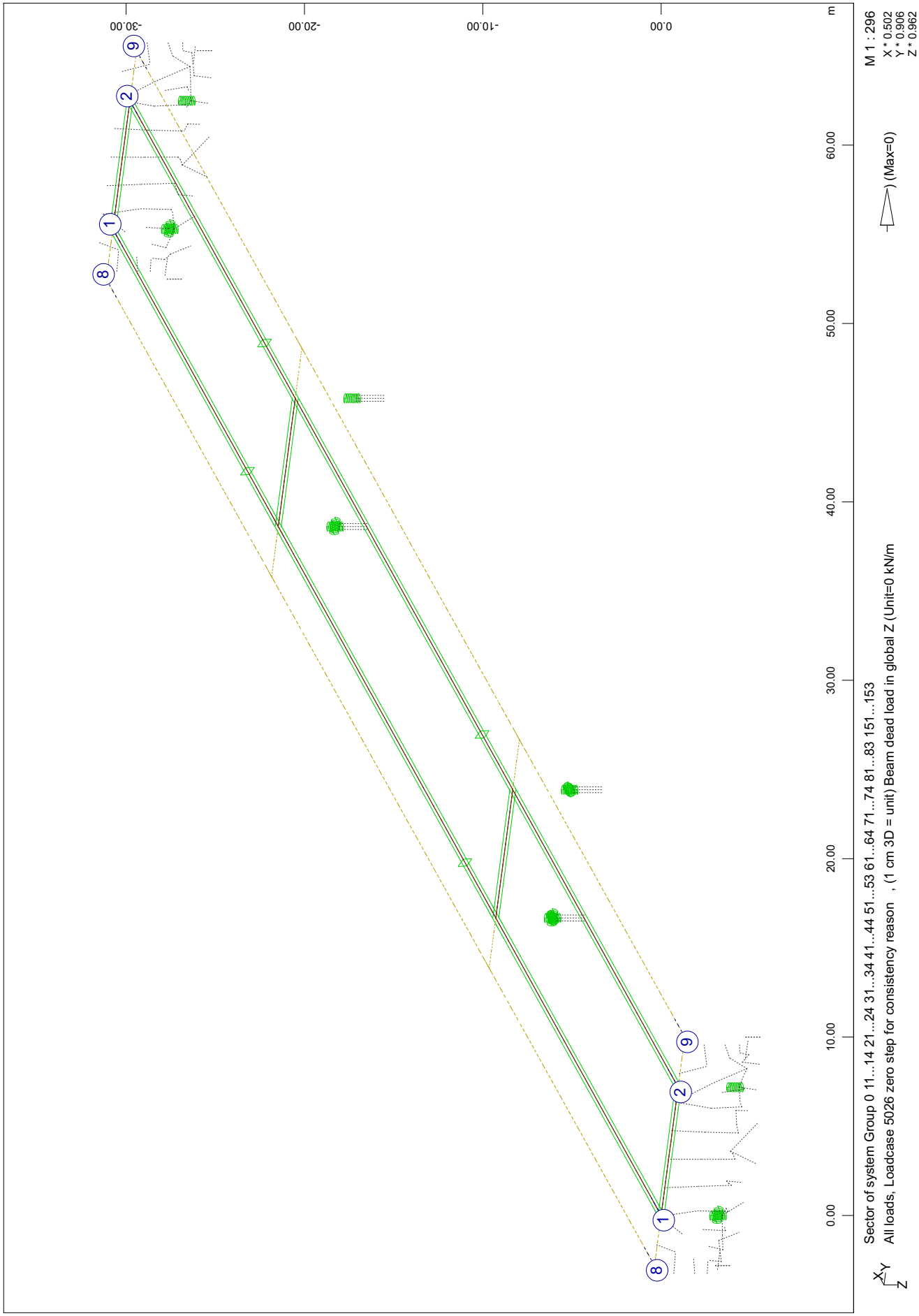

SOFiSTiK AG - www.sofistik.de

Composite bridge 38+50+38, b=14.25m, 2x2HL1100R HISTAR460 , slab 0.30m C30/37

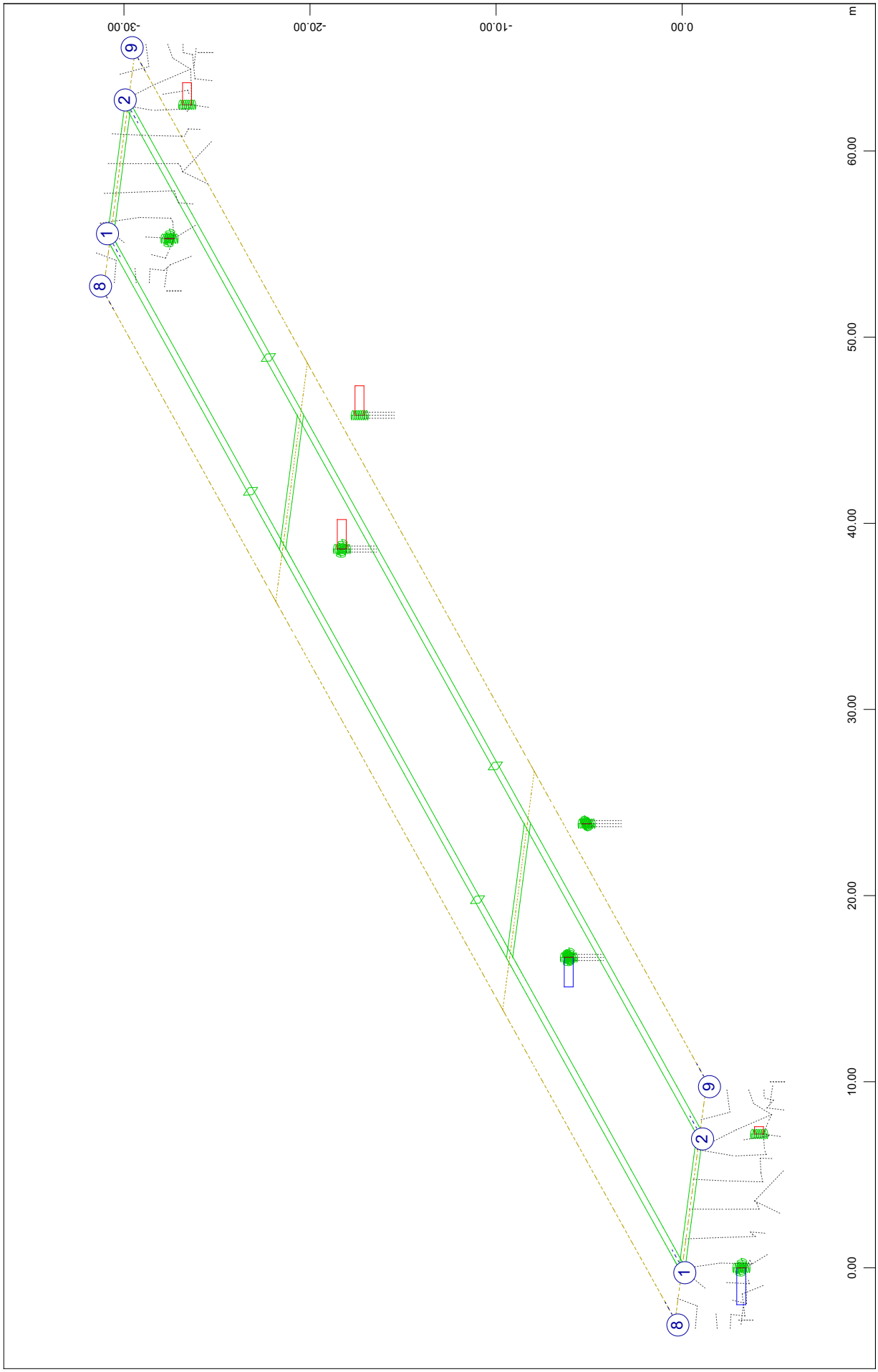

SOFiSTiK AG - www.sofistik.de

Composite bridge 38+50+38, b=14.25m, 2x2HL1100R HISTAR460 , slab 0.30m C30/37

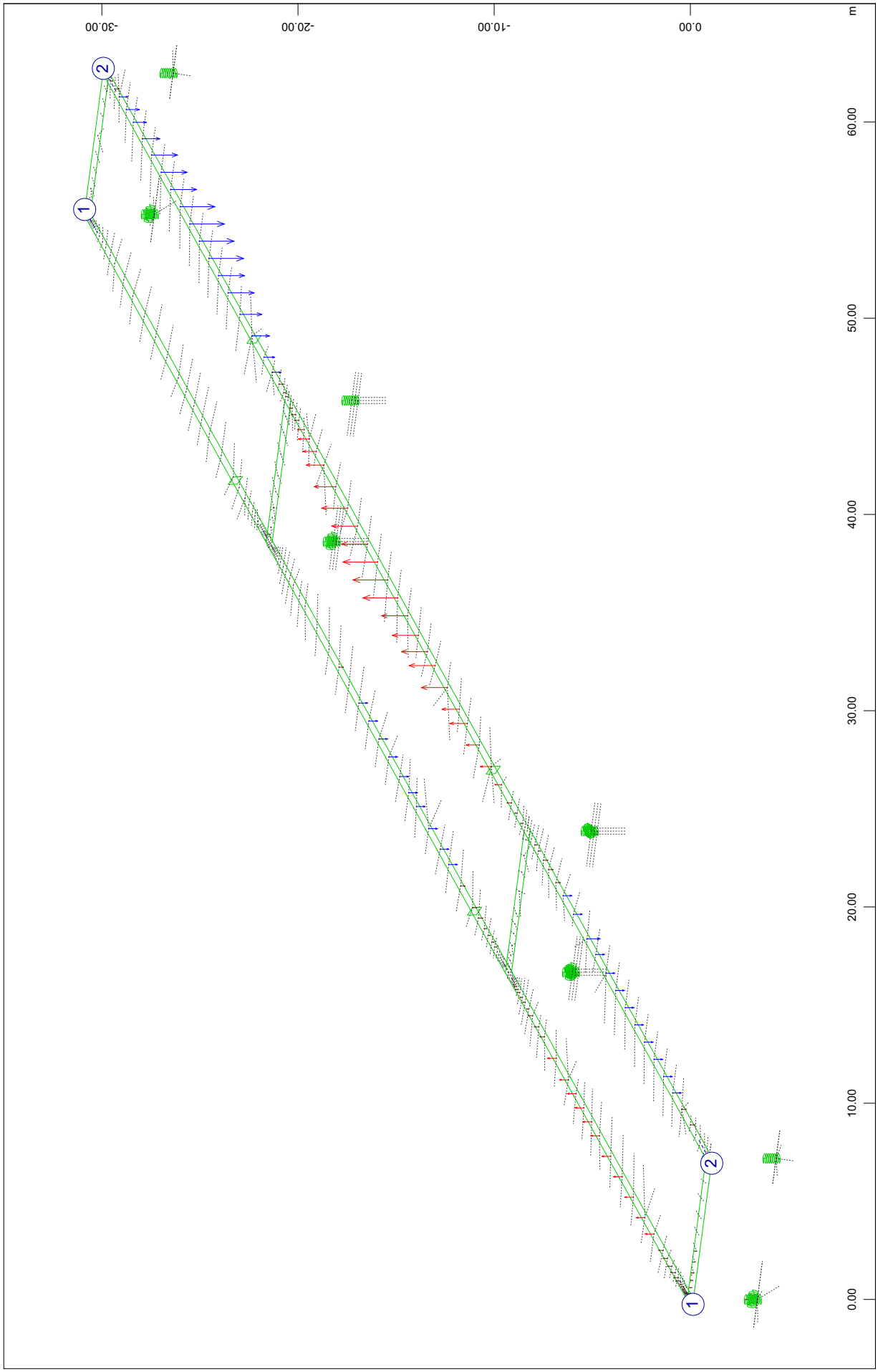

SOFiSTiK AG - www.sofistik.de

Composite bridge 38+50+38, b=14.25m, 2x2HL1100R HISTAR460 , slab 0.30m C30/37

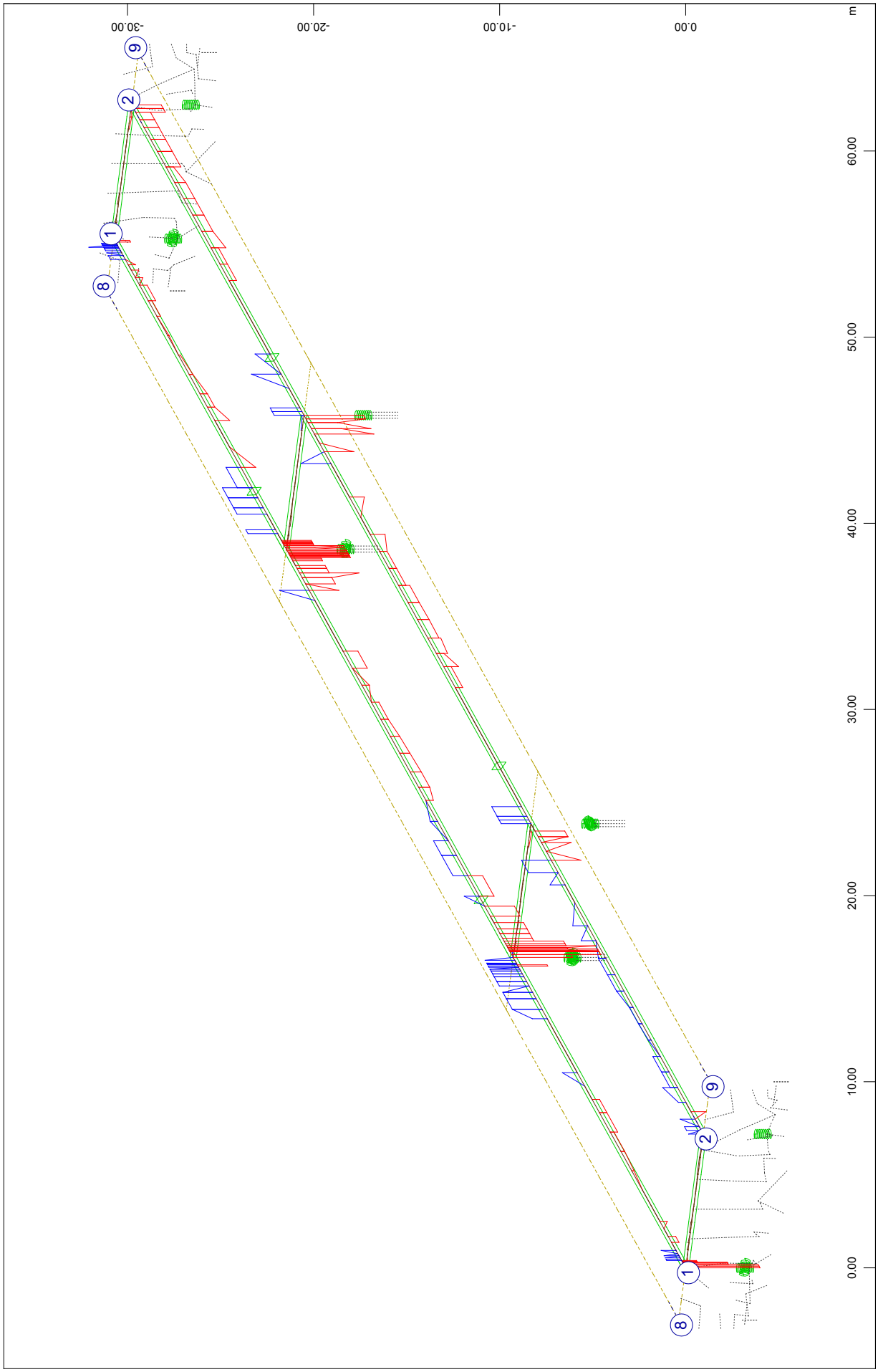

SOFiSTiK AG - www.sofistik.de

Composite bridge 38+50+38, b=14.25m, 2x2HL1100R HISTAR460 , slab 0.30m C30/37

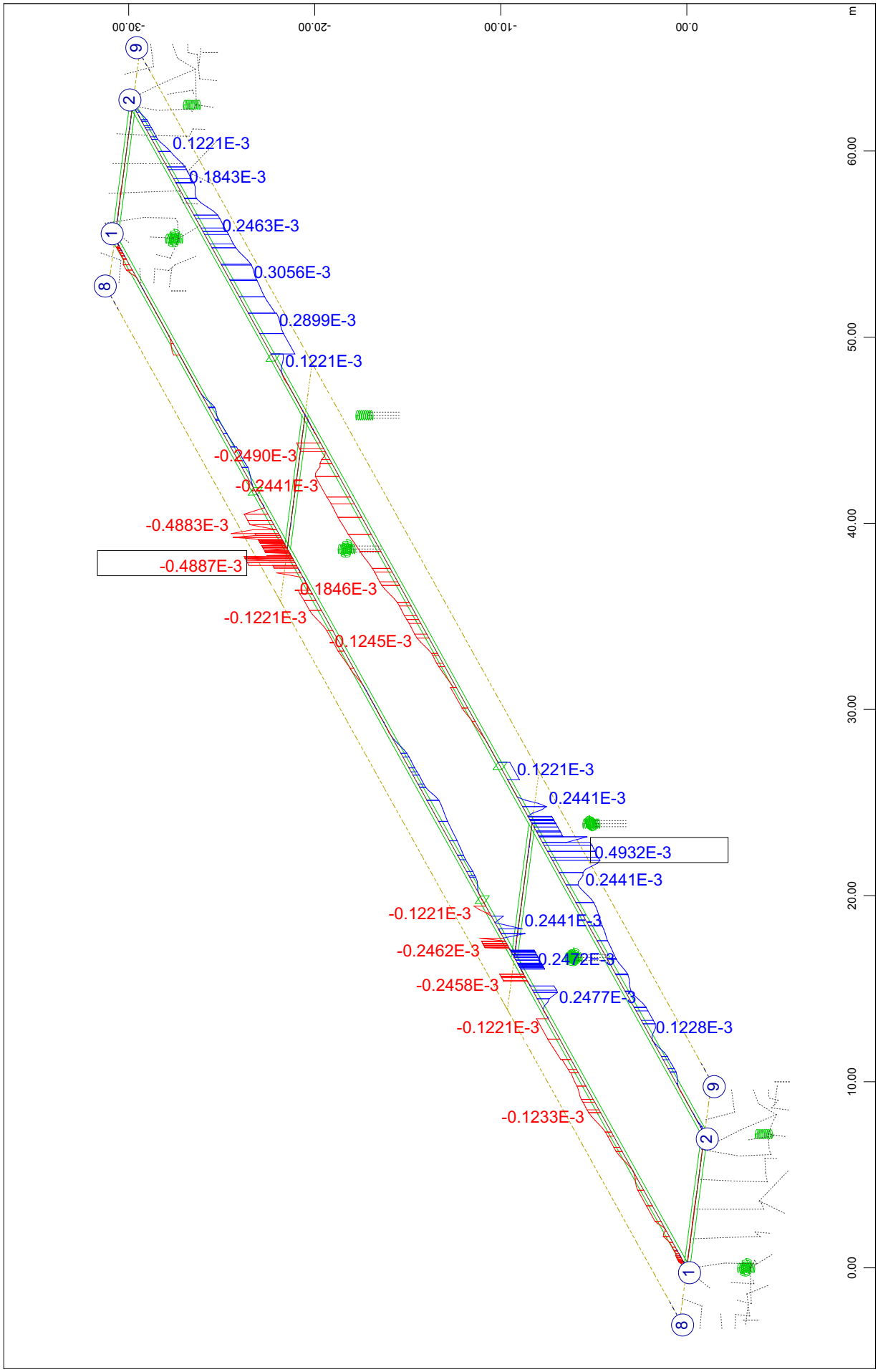

SOFiSTiK AG - www.sofistik.de

Composite bridge 38+50+38, b=14.25m, 2x2HL1100R HISTAR460 , slab 0.30m C30/37

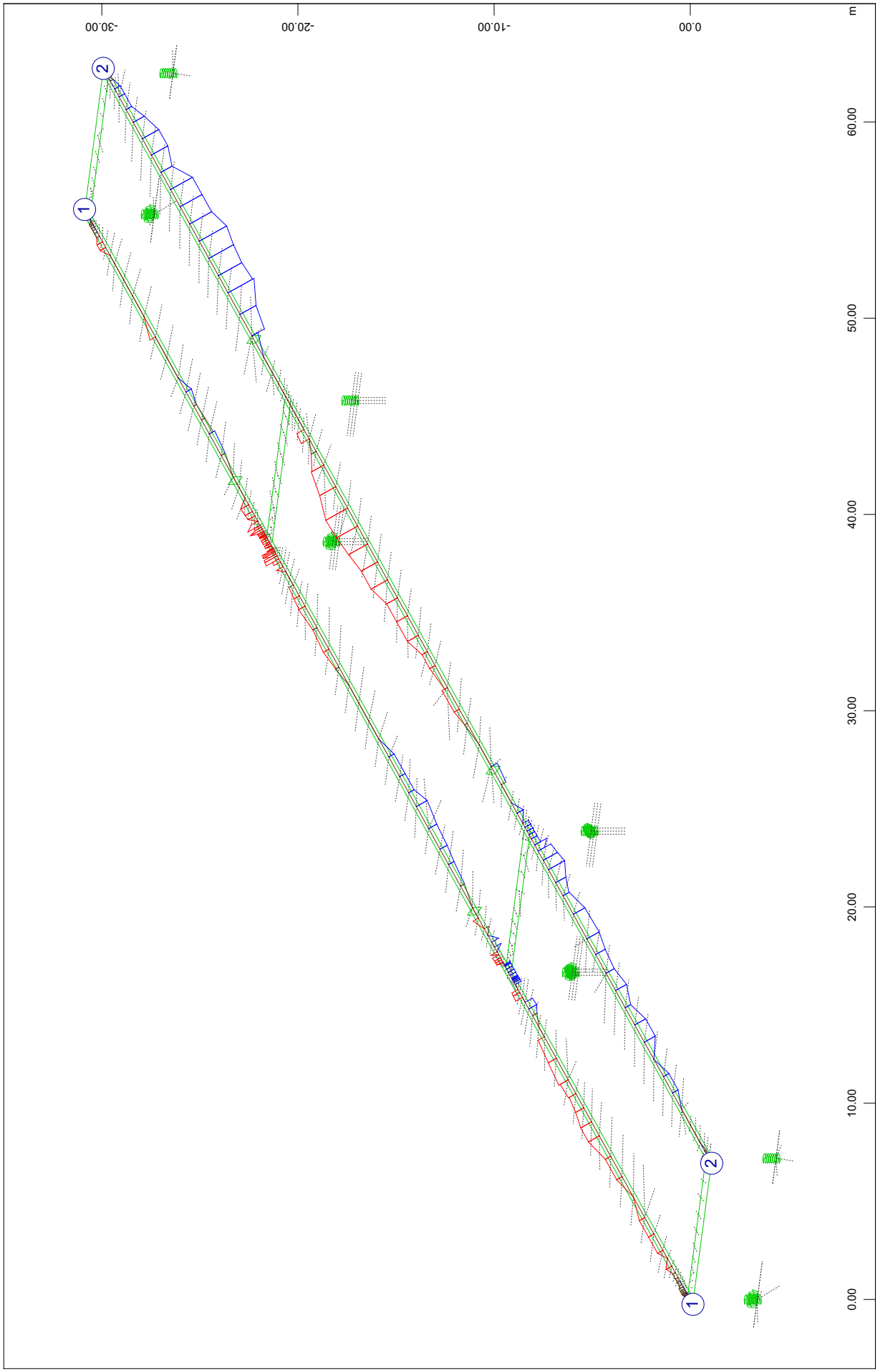

SOFiSTiK AG - www.sofistik.de

Composite bridge 38+50+38, b=14.25m, 2x2HL1100R HISTAR460 , slab 0.30m C30/37

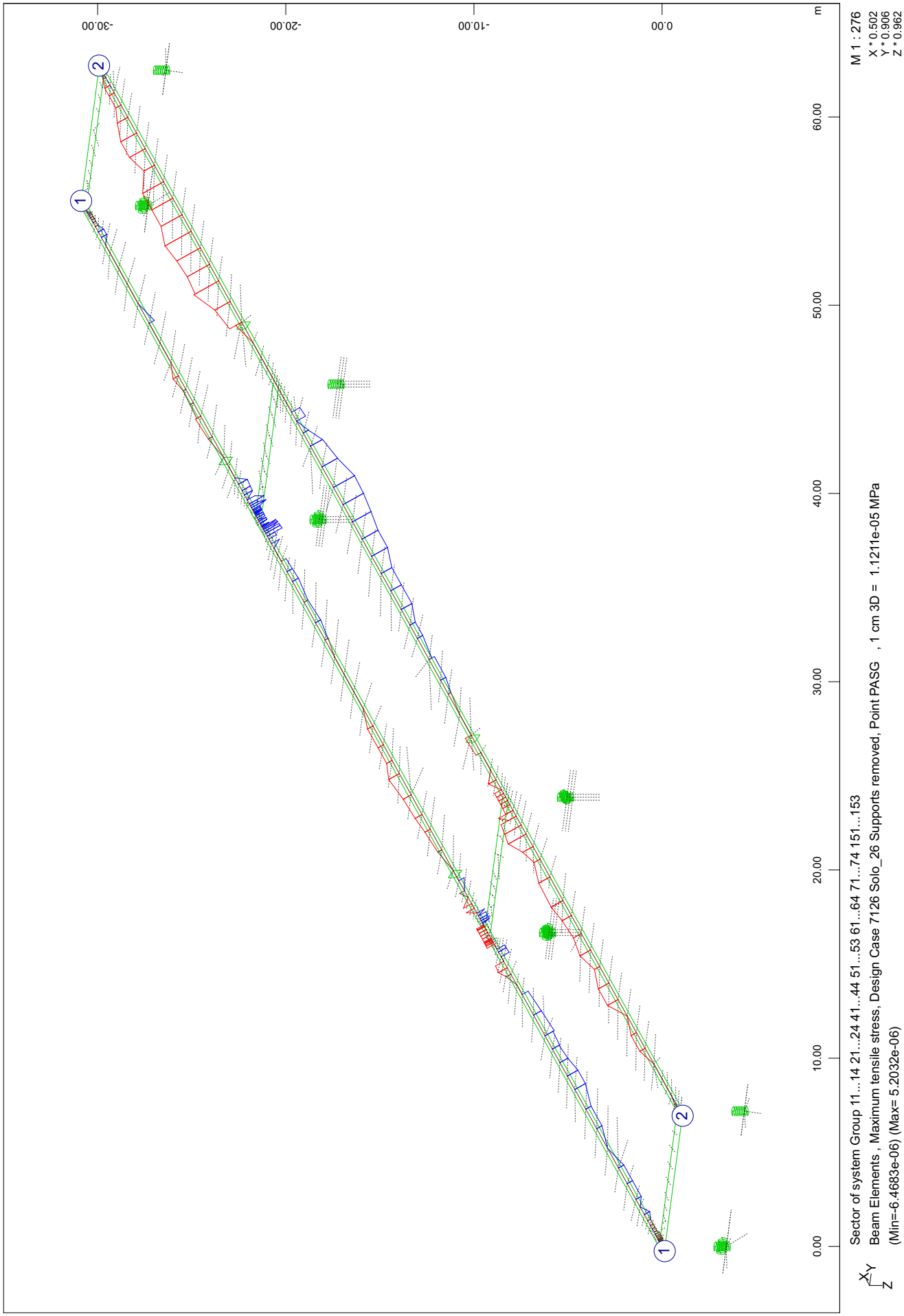

SOFiSTiK AG - www.sofistik.de

Composite bridge 38+50+38, b=14.25m, 2x2HL1100R HISTAR460 , slab 0.30m C30/37

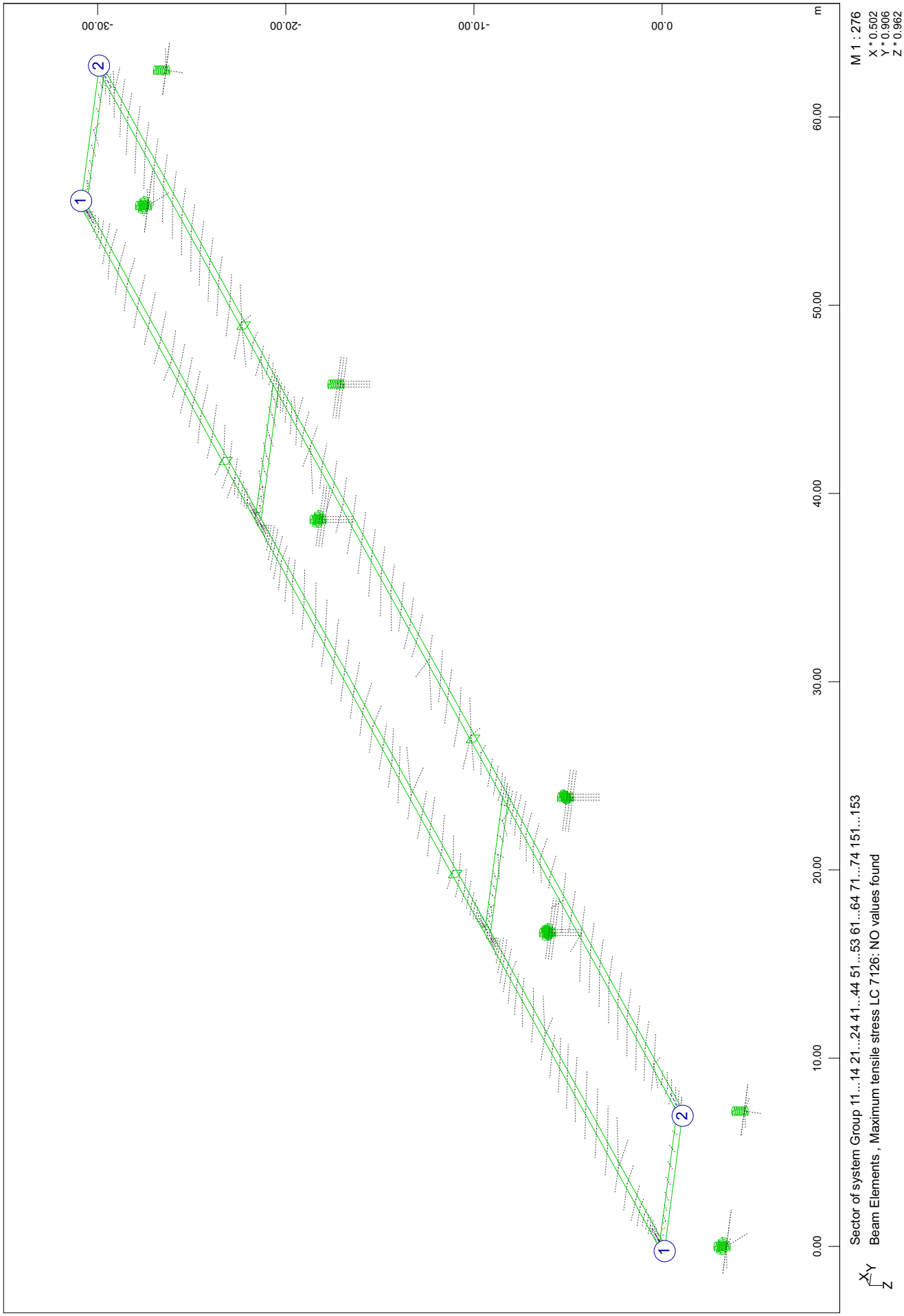

SOFiSTiK AG - www.sofistik.de

```
Composite bridge 38+50+38, b=14.25m, 2x2HL1100R HISTAR460 , slab 0.30m C30/37

+++++ warning no.   807 in program gr3_l_mach
       BEAM TYPE SZPT STYP BEAM design case  7126 not valid : No values found
```

SOFiSTiK AG - www.sofistik.de

Composite bridge 38+50+38, b=14.25m, 2x2HL1100R HISTAR460 , slab 0.30m C30/37

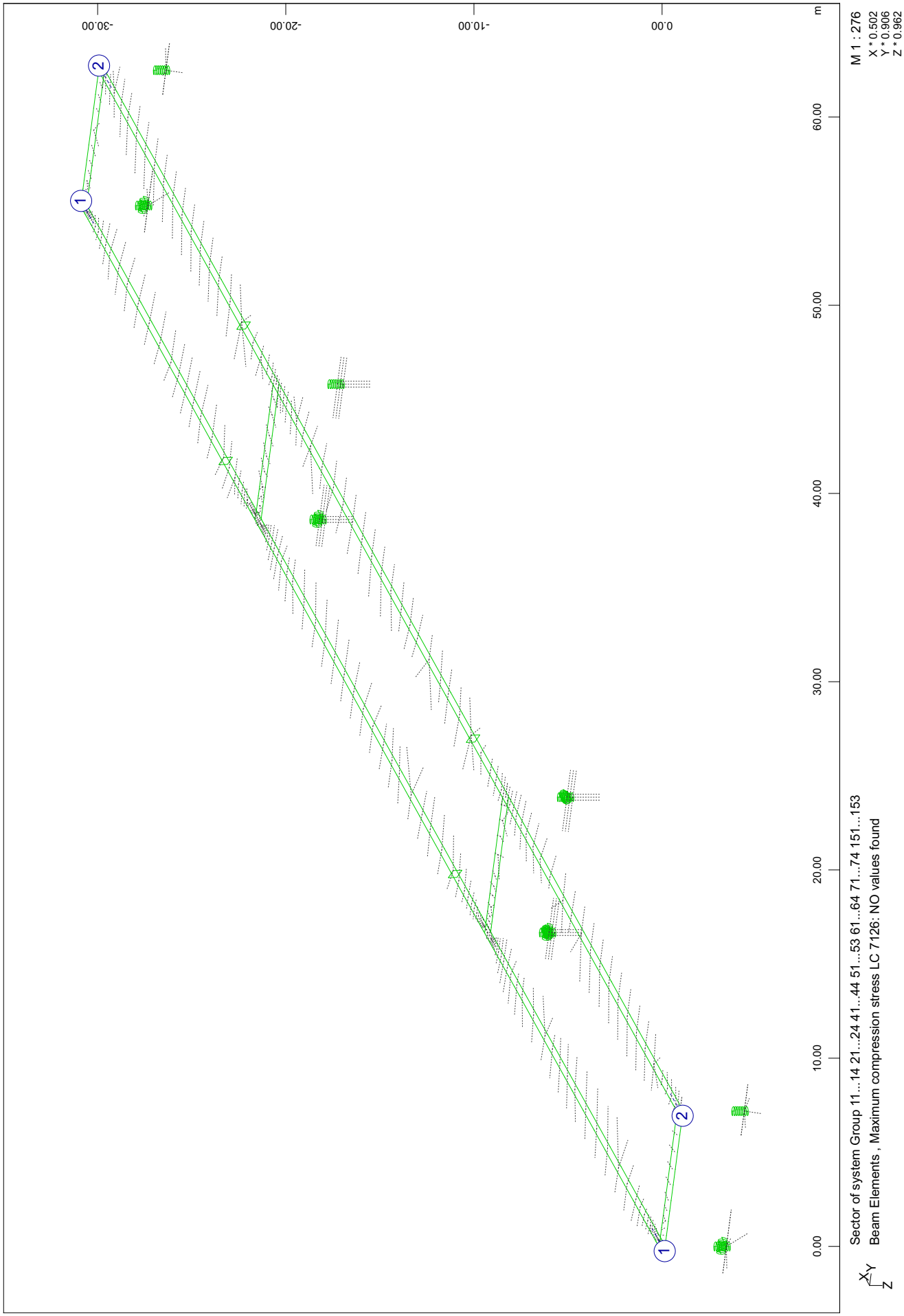

SOFiSTiK AG - www.sofistik.de

```
Composite bridge 38+50+38, b=14.25m, 2x2HL1100R HISTAR460 , slab 0.30m C30/37

+++++ warning no.   807 in program gr3_l_mach
       BEAM TYPE SDPT STYP BEAM design case  7126 not valid : No values found
```

SOFiSTiK AG - www.sofistik.de

Composite bridge 38+50+38, b=14.25m, 2x2HL1100R HISTAR460 , slab 0.30m C30/37

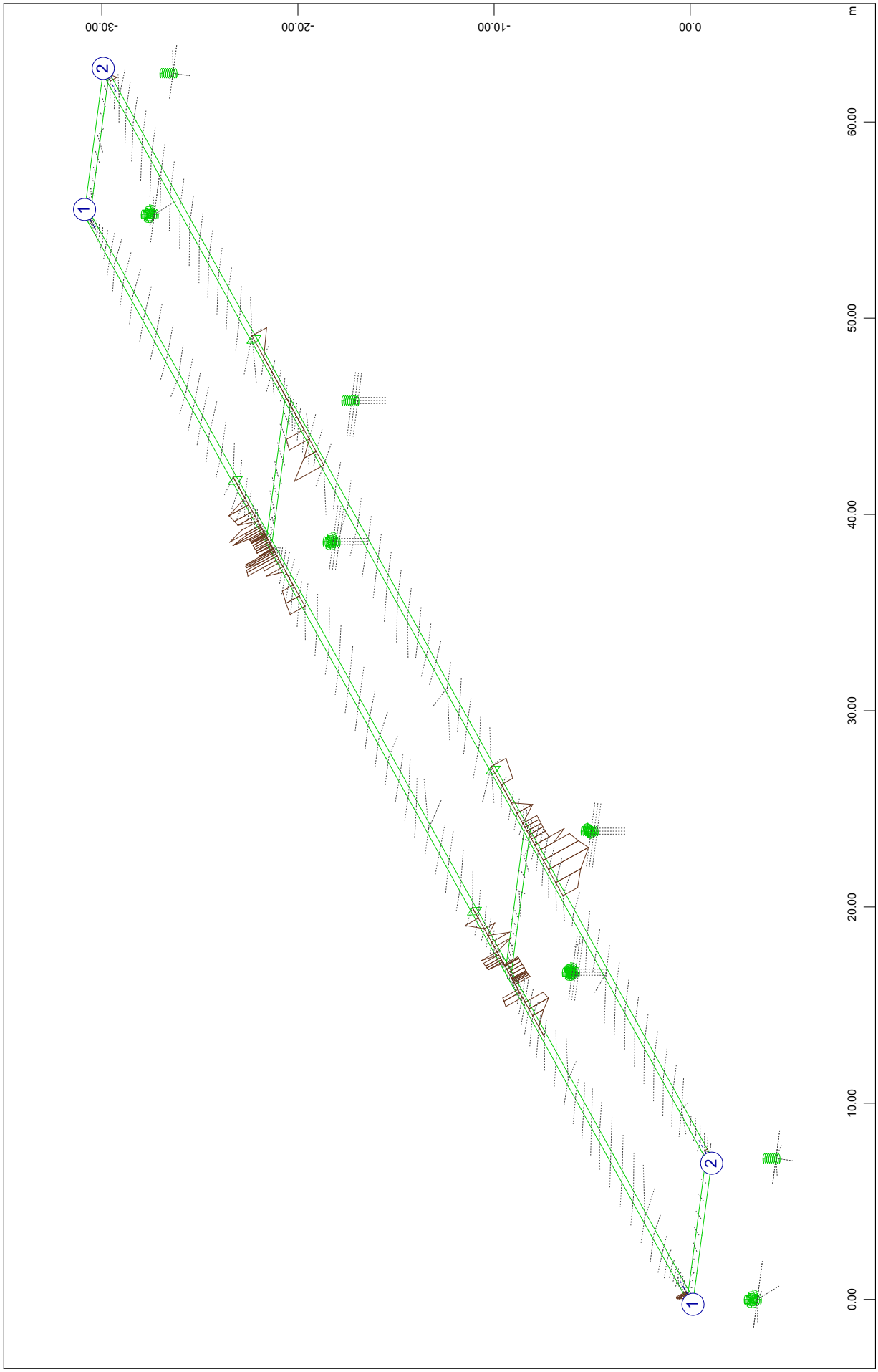

SOFiSTiK AG - www.sofistik.de

Composite bridge 38+50+38, b=14.25m, 2x2HL1100R HISTAR460 , slab 0.30m C30/37
Incremental results of CSM stages; CS27: weight of insitu wet concrete slab

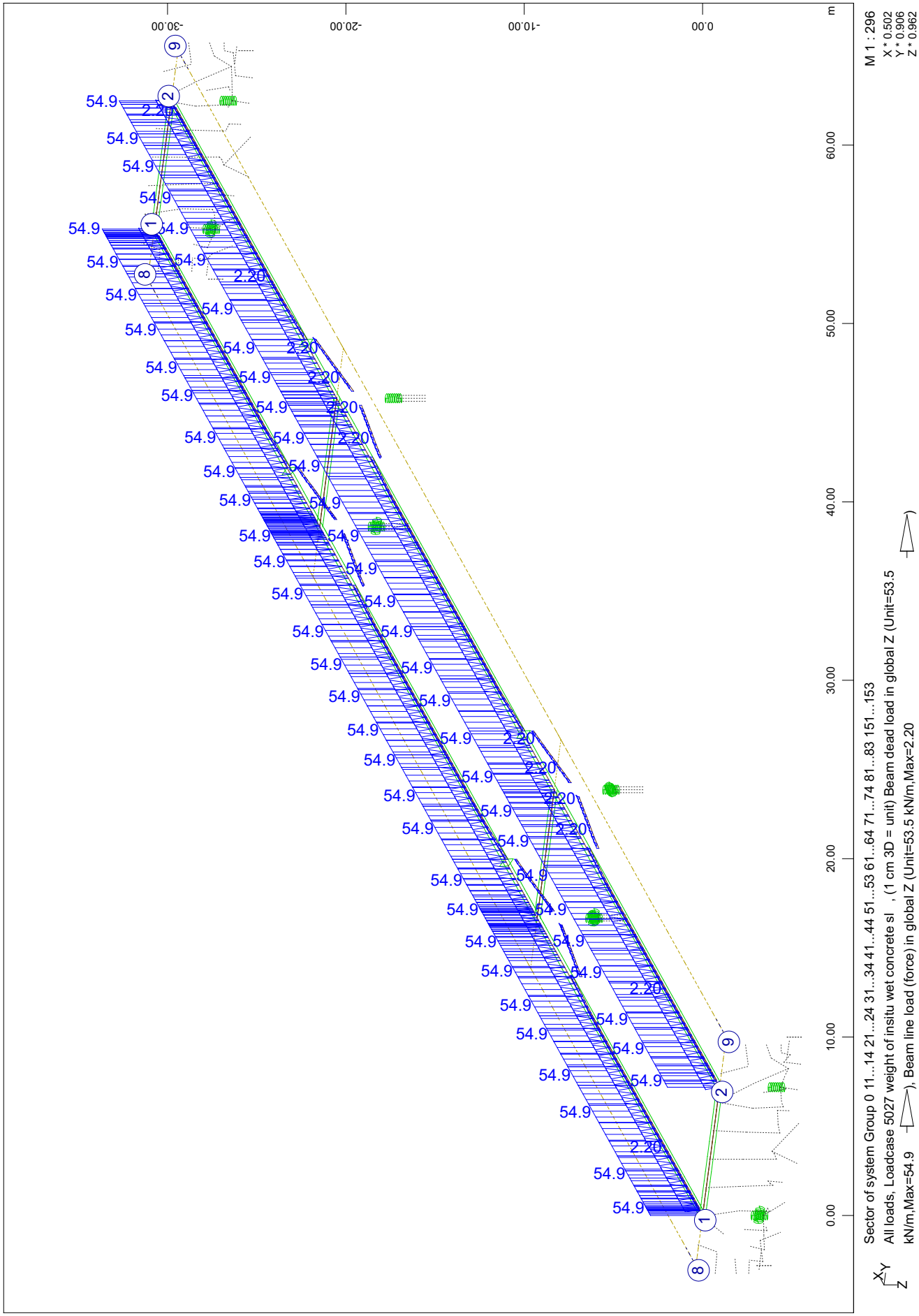

SOFiSTiK AG - www.sofistik.de

Composite bridge 38+50+38, b=14.25m, 2x2HL1100R HISTAR460 , slab 0.30m C30/37

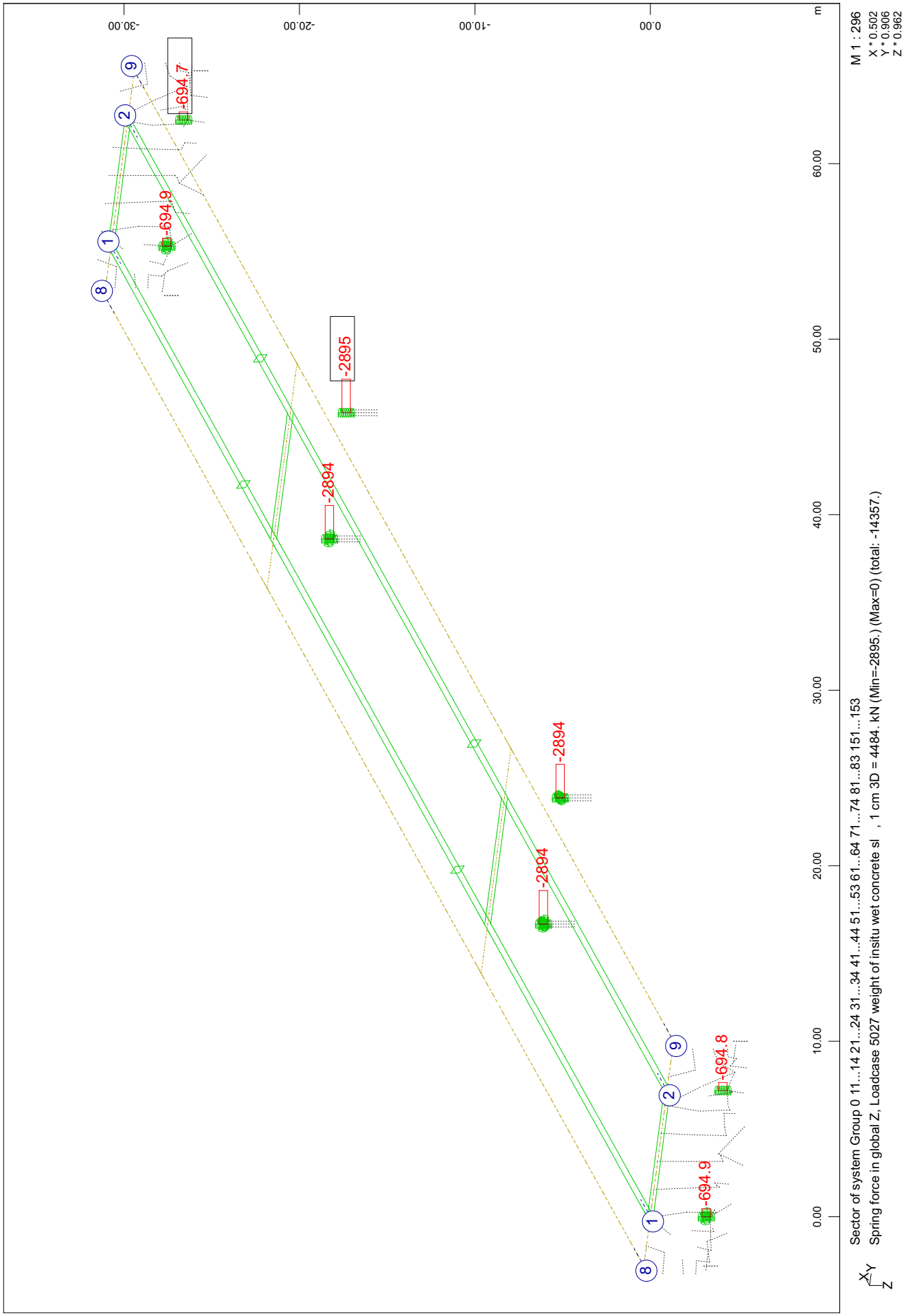

SOFiSTiK AG - www.sofistik.de

Composite bridge 38+50+38, b=14.25m, 2x2HL1100R HISTAR460 , slab 0.30m C30/37

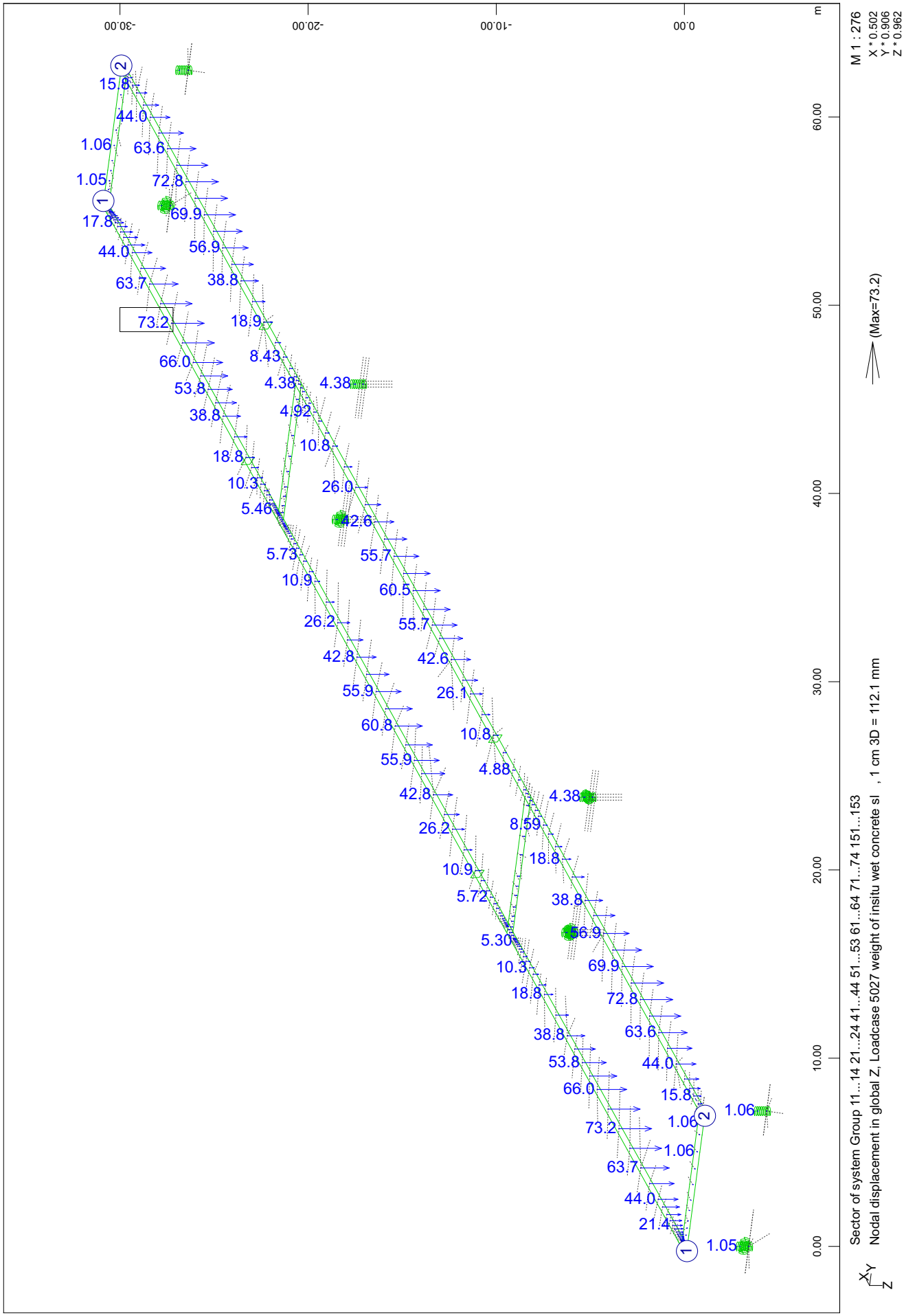

SOFiSTiK AG - www.sofistik.de

Composite bridge 38+50+38, b=14.25m, 2x2HL1100R HISTAR460 , slab 0.30m C30/37

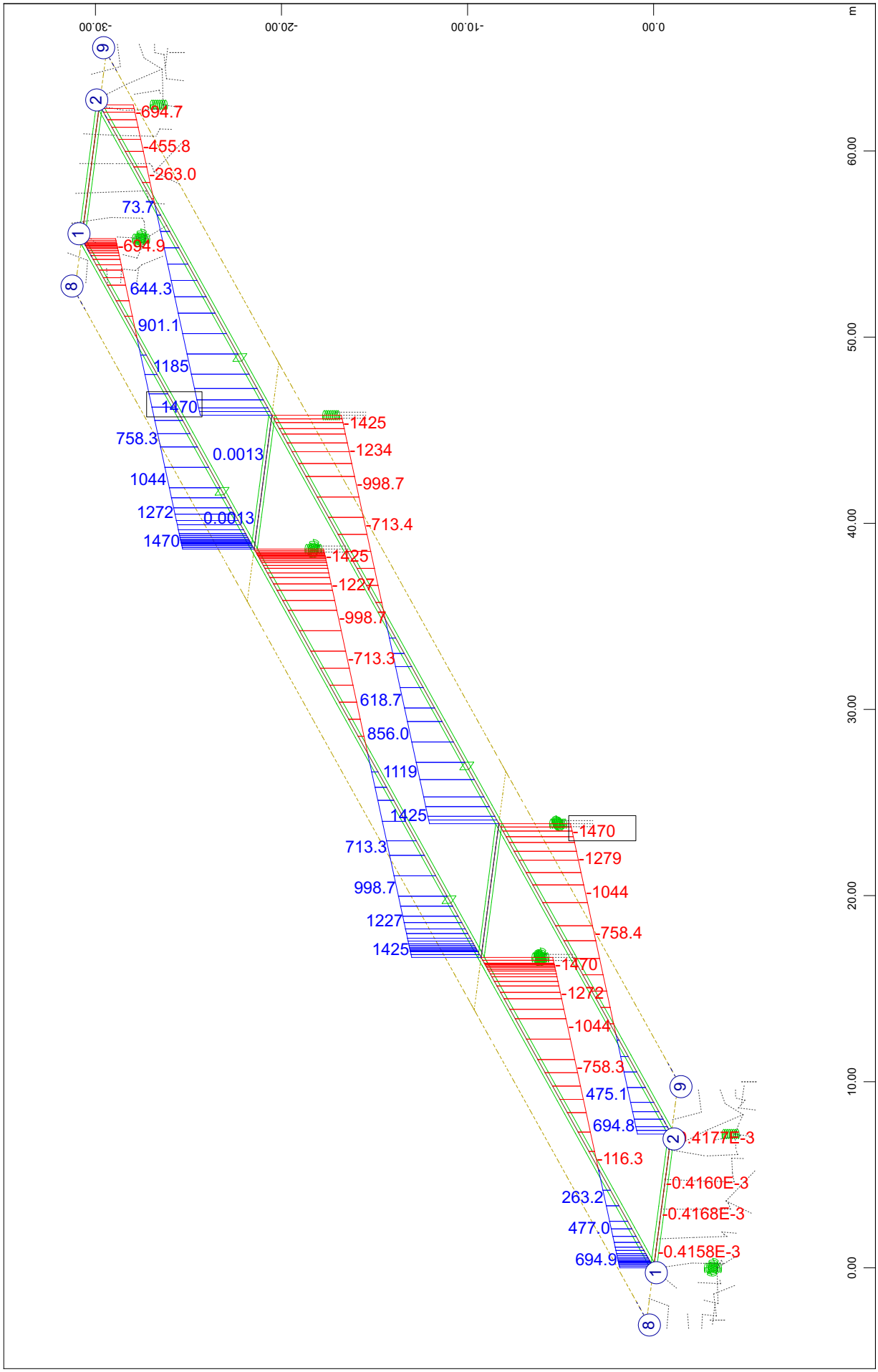

SOFiSTiK AG - www.sofistik.de

Composite bridge 38+50+38, b=14.25m, 2x2HL1100R HISTAR460 , slab 0.30m C30/37

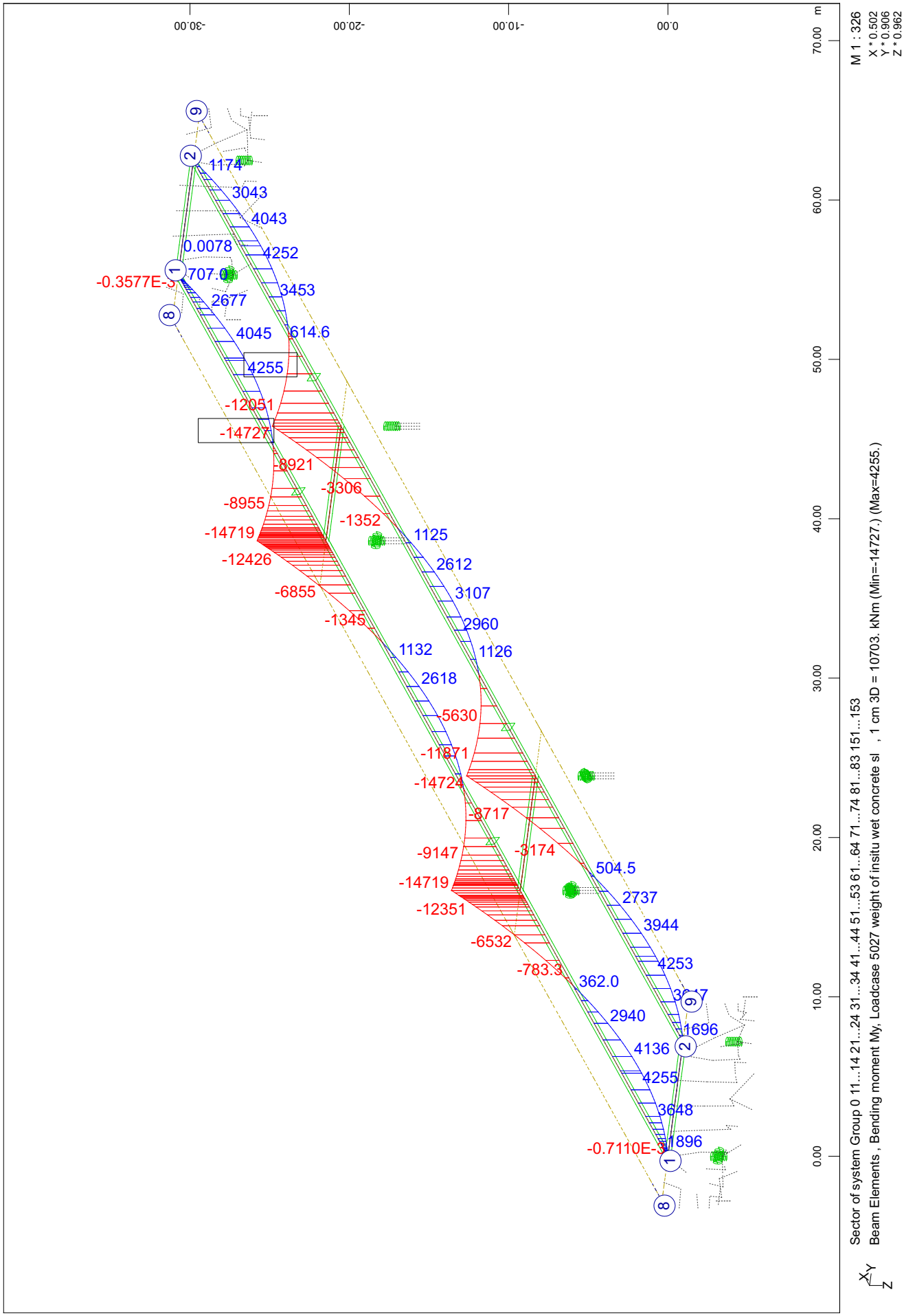

SOFiSTiK AG - www.sofistik.de

Composite bridge 38+50+38, b=14.25m, 2x2HL1100R HISTAR460 , slab 0.30m C30/37

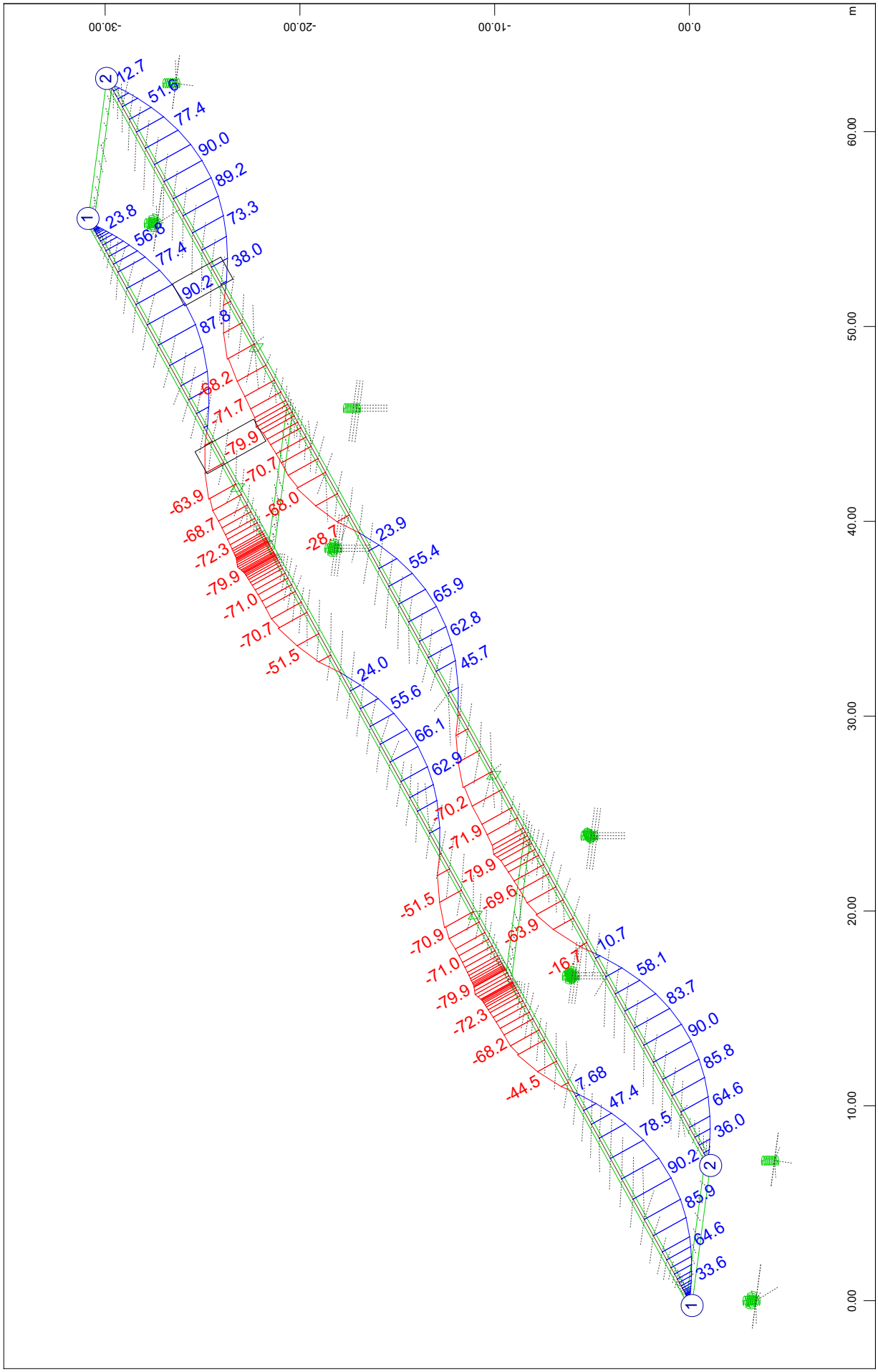

SOFiSTiK AG - www.sofistik.de

Composite bridge 38+50+38, b=14.25m, 2x2HL1100R HISTAR460 , slab 0.30m C30/37

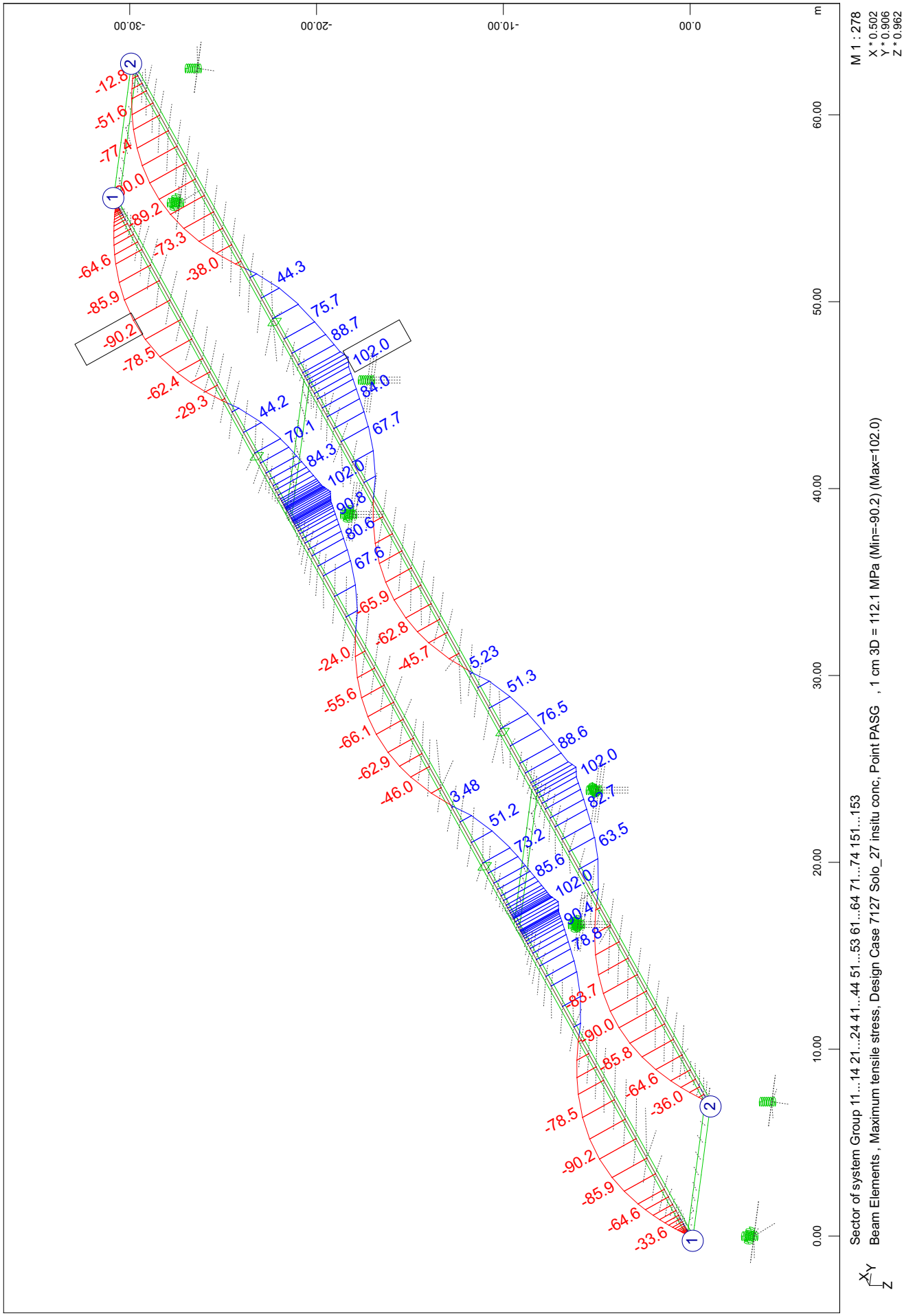

SOFiSTiK AG - www.sofistik.de

Composite bridge 38+50+38, b=14.25m, 2x2HL1100R HISTAR460 , slab 0.30m C30/37

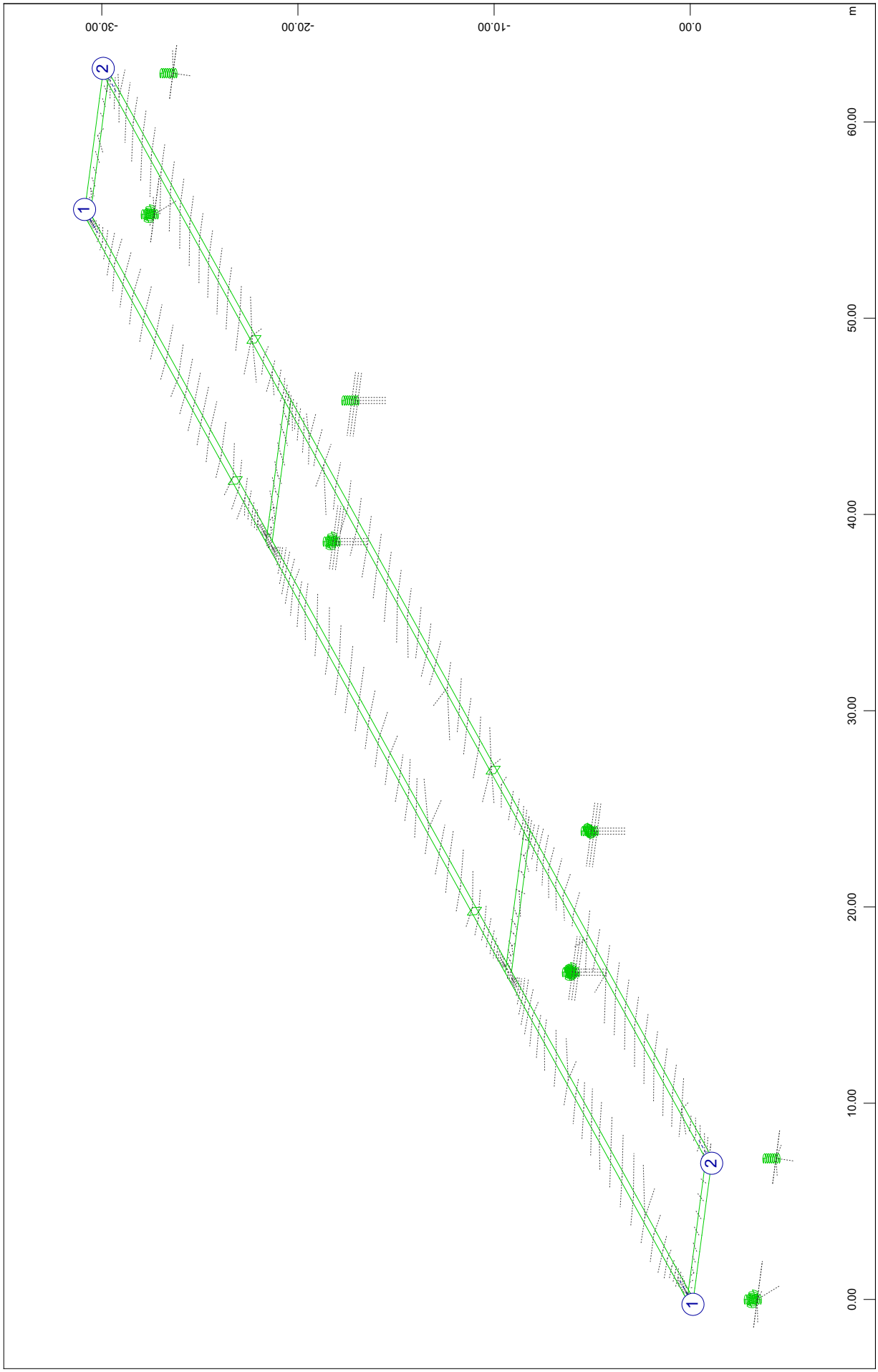

SOFiSTiK AG - www.sofistik.de

```
Composite bridge 38+50+38, b=14.25m, 2x2HL1100R HISTAR460 , slab 0.30m C30/37

+++++ warning no.   807 in program gr3_l_mach
       BEAM TYPE SZPT STYP BEAM design case  7127 not valid : No values found
```

SOFiSTiK AG - www.sofistik.de

Composite bridge 38+50+38, b=14.25m, 2x2HL1100R HISTAR460 , slab 0.30m C30/37

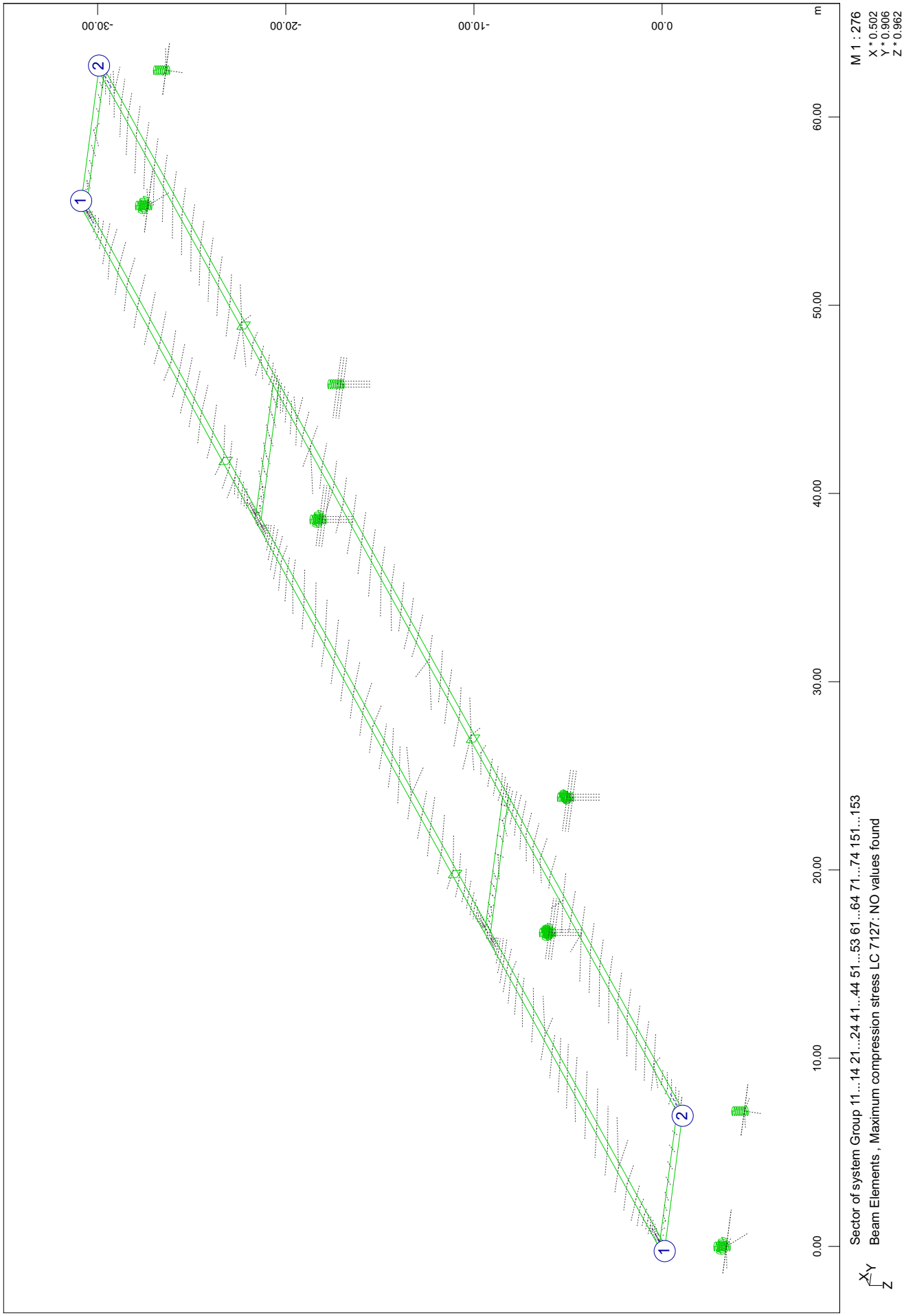

SOFiSTiK AG - www.sofistik.de

```
Composite bridge 38+50+38, b=14.25m, 2x2HL1100R HISTAR460 , slab 0.30m C30/37

+++++ warning no.   807 in program gr3_l_mach
       BEAM TYPE SDPT STYP BEAM design case  7127 not valid : No values found
```

SOFiSTiK AG - www.sofistik.de

Composite bridge 38+50+38, b=14.25m, 2x2HL1100R HISTAR460 , slab 0.30m C30/37

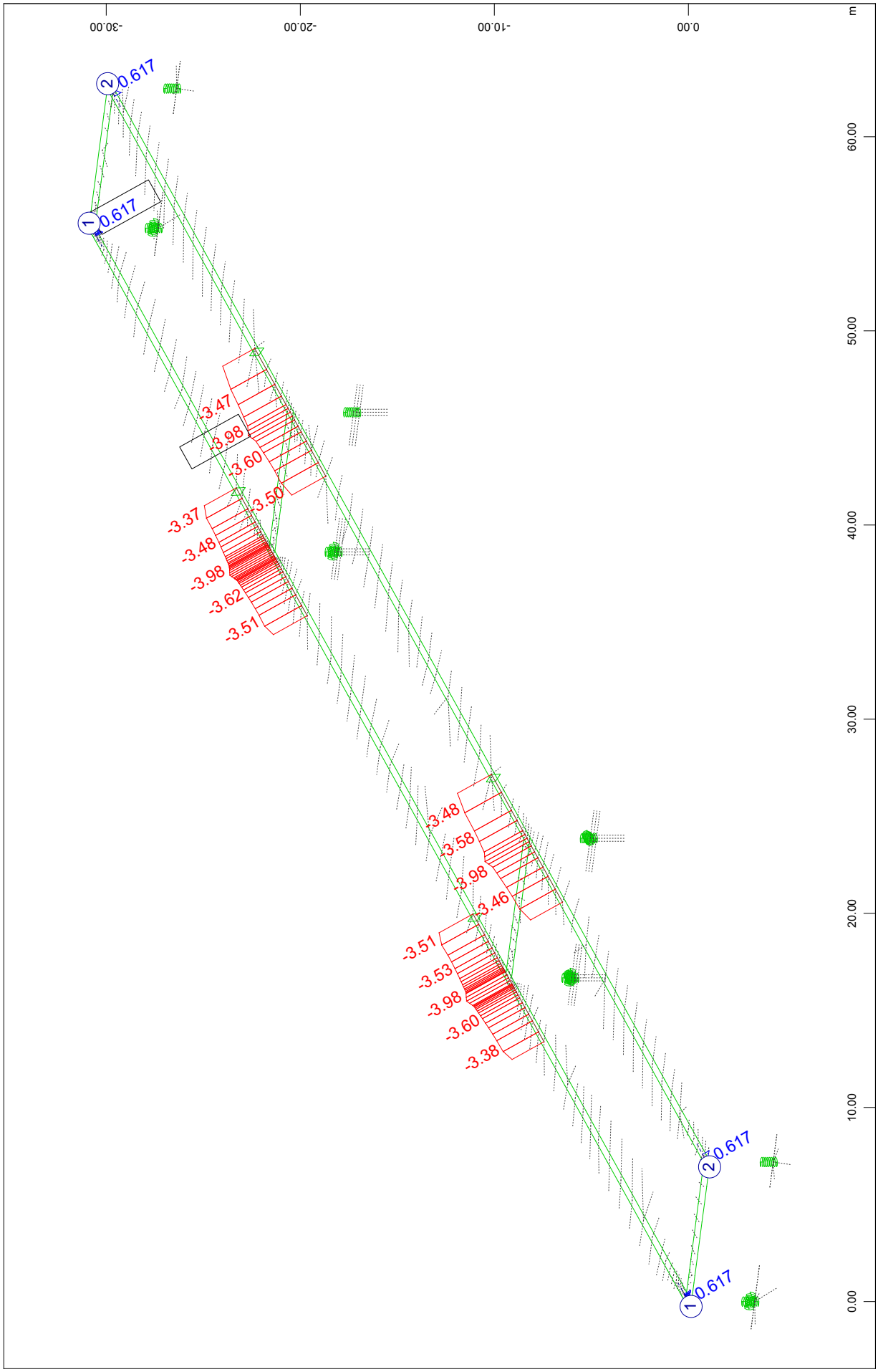

SOFiSTiK AG - www.sofistik.de

Composite bridge 38+50+38, b=14.25m, 2x2HL1100R HISTAR460 , slab 0.30m C30/37
Incremental results of CSM stages; CS30: scaffoldings removed

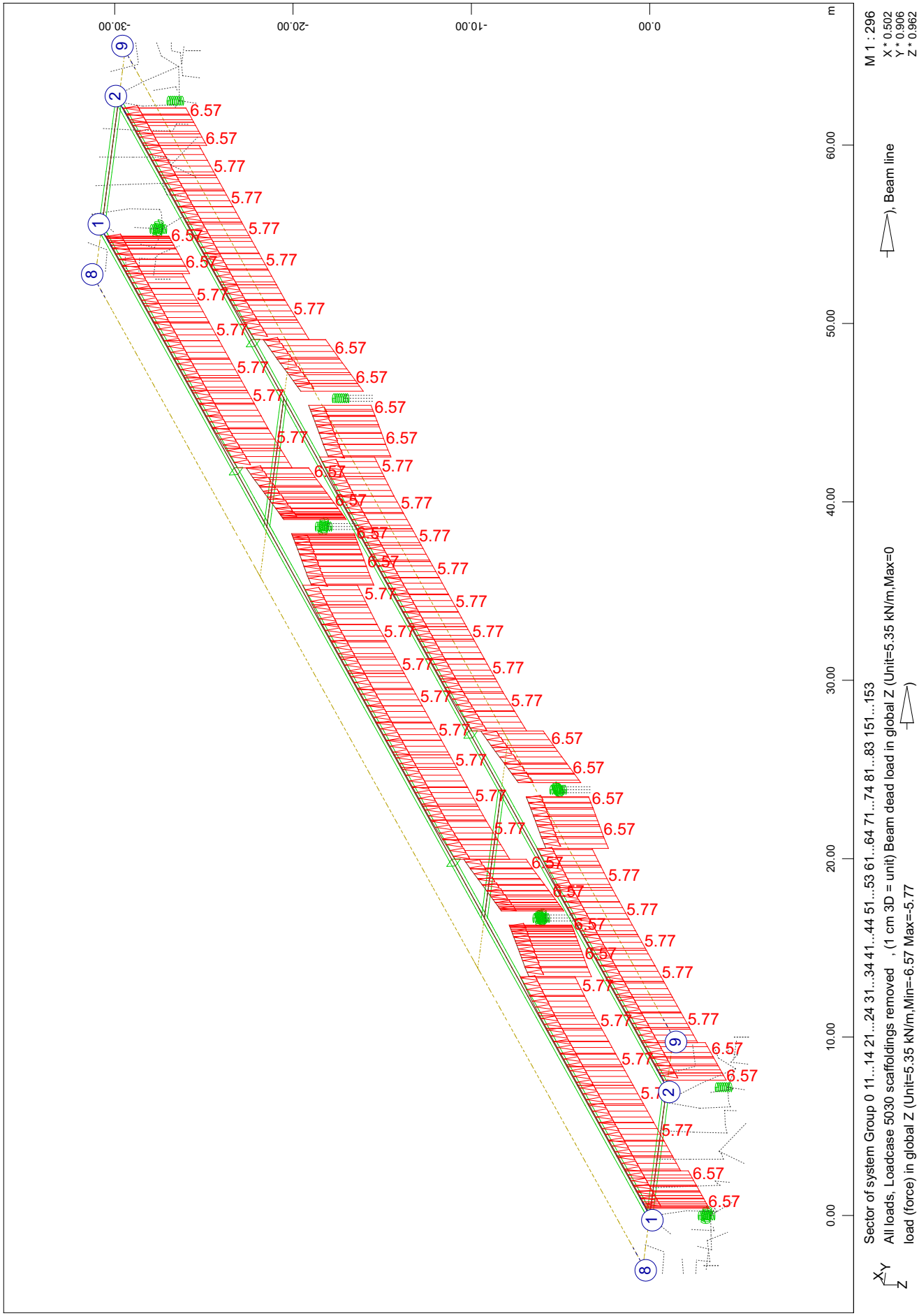

SOFiSTiK AG - www.sofistik.de

Composite bridge 38+50+38, b=14.25m, 2x2HL1100R HISTAR460 , slab 0.30m C30/37

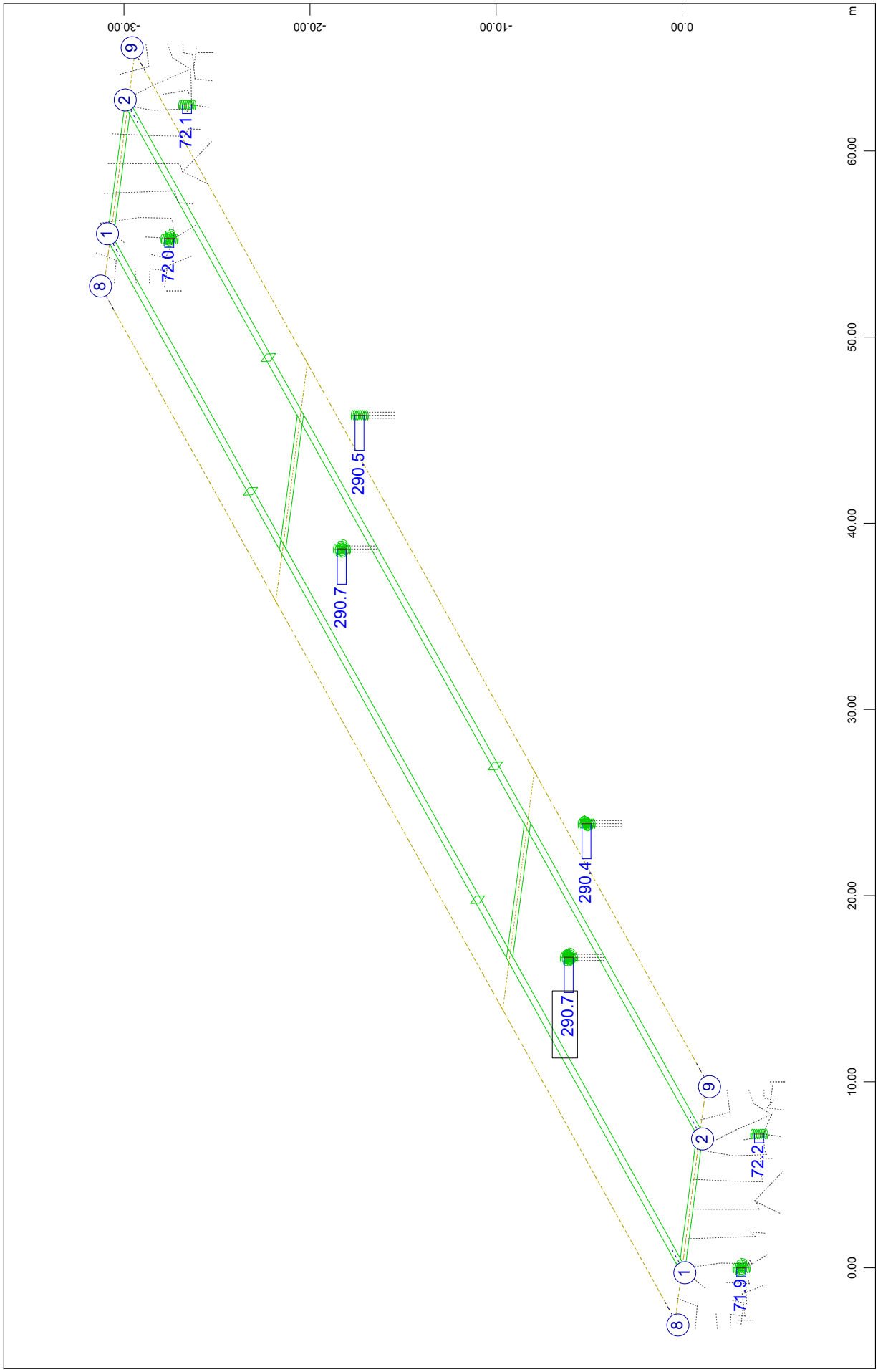

SOFiSTiK AG - www.sofistik.de

Composite bridge 38+50+38, b=14.25m, 2x2HL1100R HISTAR460 , slab 0.30m C30/37

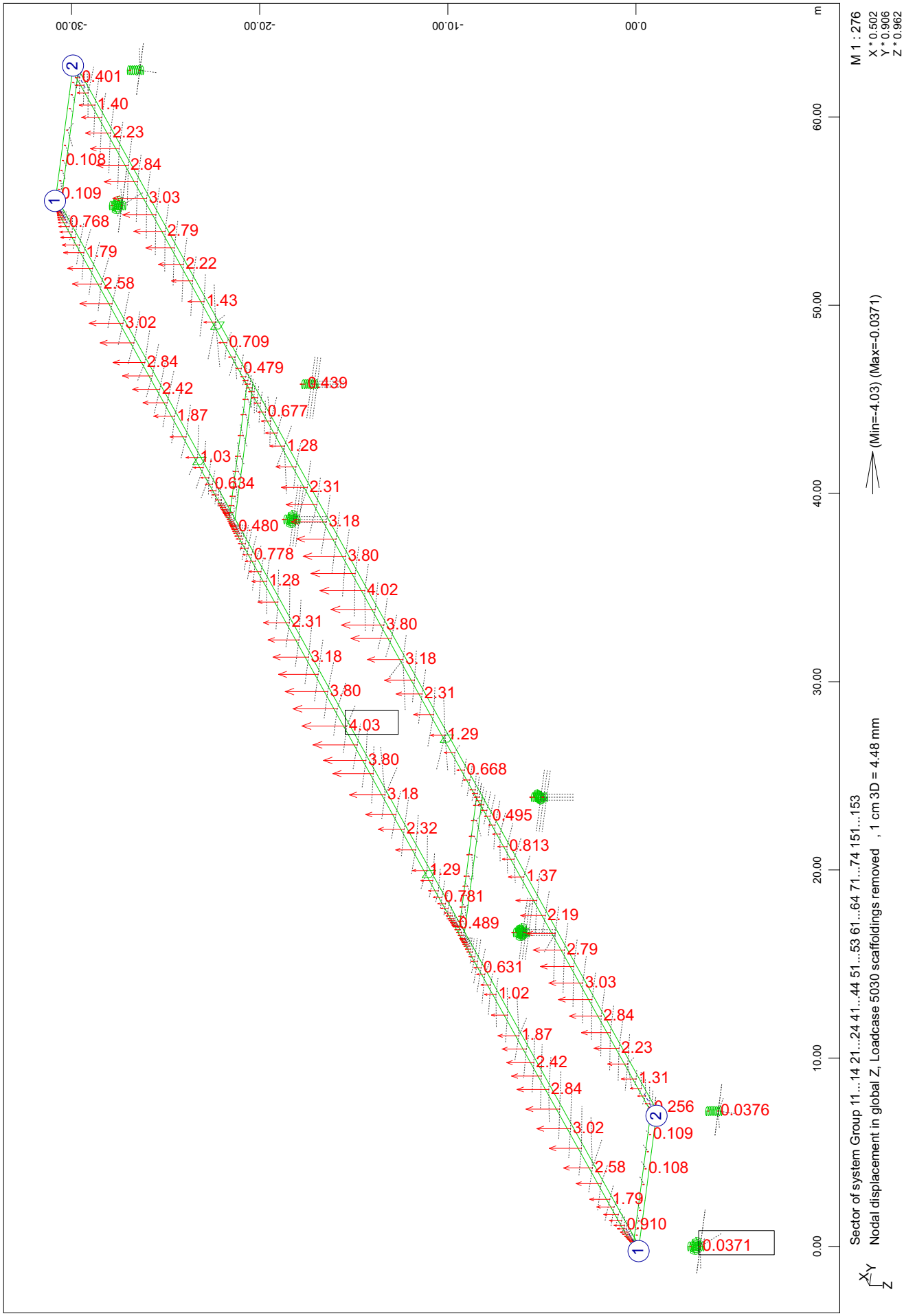

SOFiSTiK AG - www.sofistik.de

Composite bridge 38+50+38, b=14.25m, 2x2HL1100R HISTAR460 , slab 0.30m C30/37

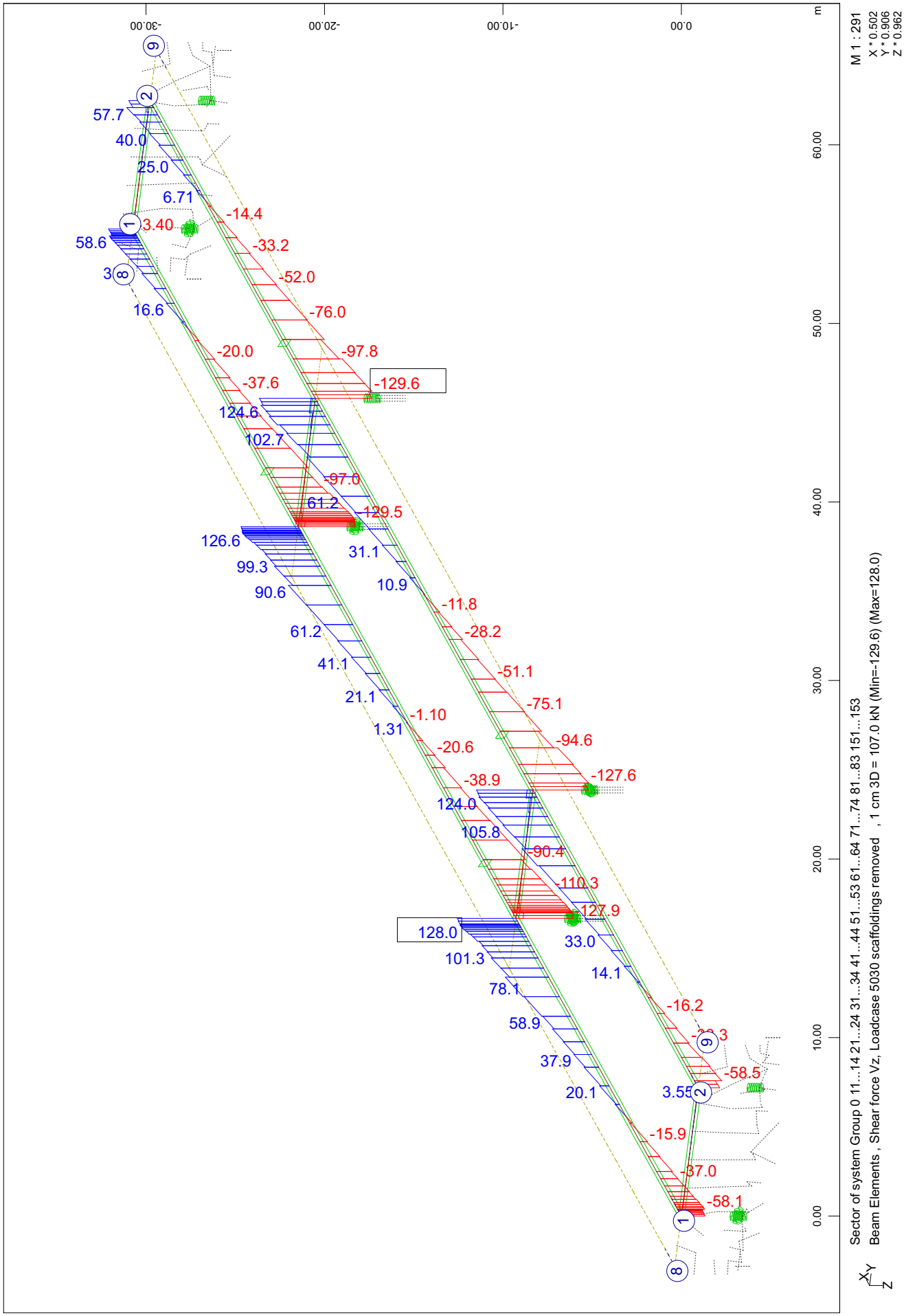

SOFiSTiK AG - www.sofistik.de

Composite bridge 38+50+38, b=14.25m, 2x2HL1100R HISTAR460 , slab 0.30m C30/37

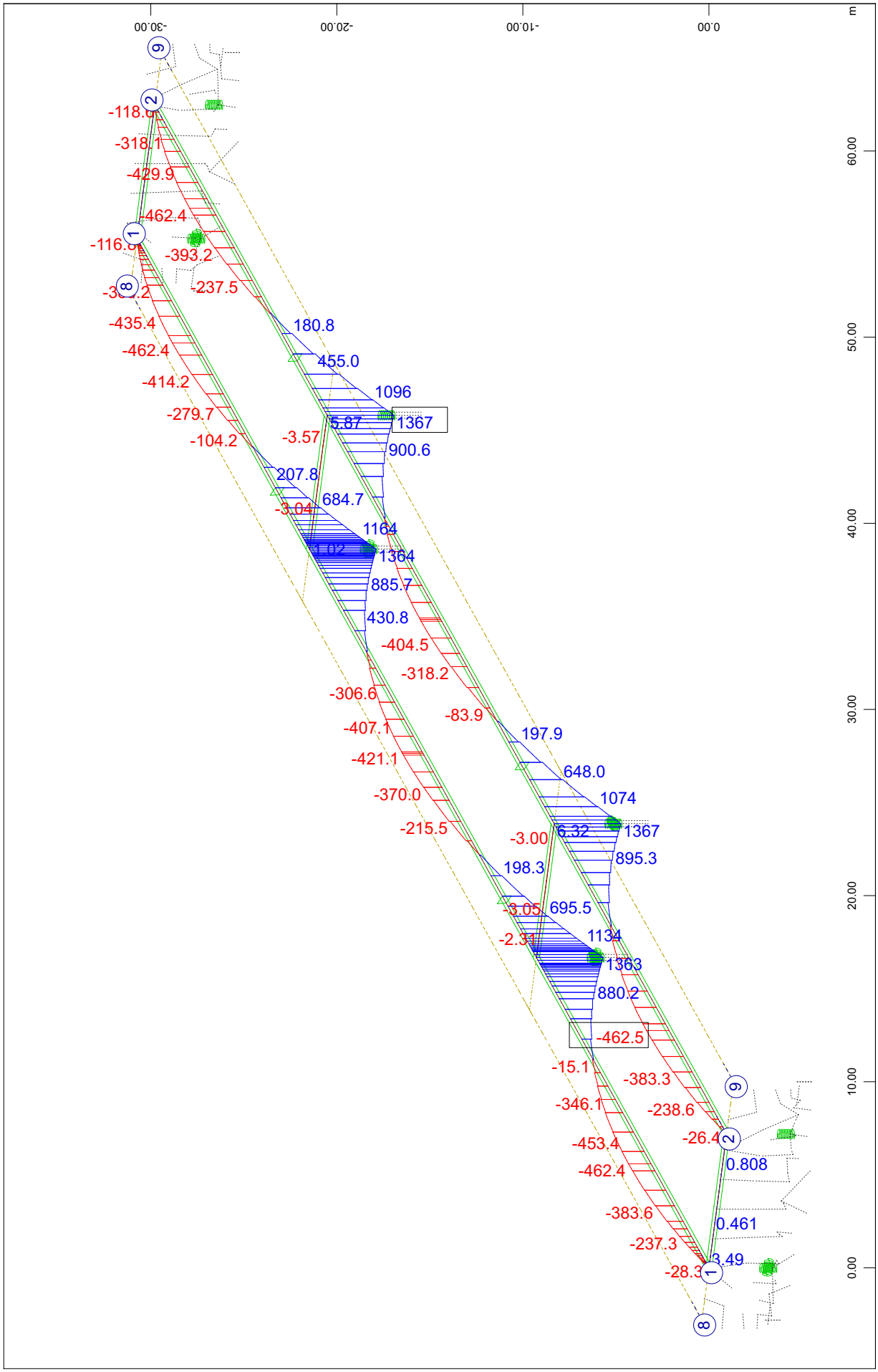

SOFiSTiK AG - www.sofistik.de

Composite bridge 38+50+38, b=14.25m, 2x2HL1100R HISTAR460 , slab 0.30m C30/37

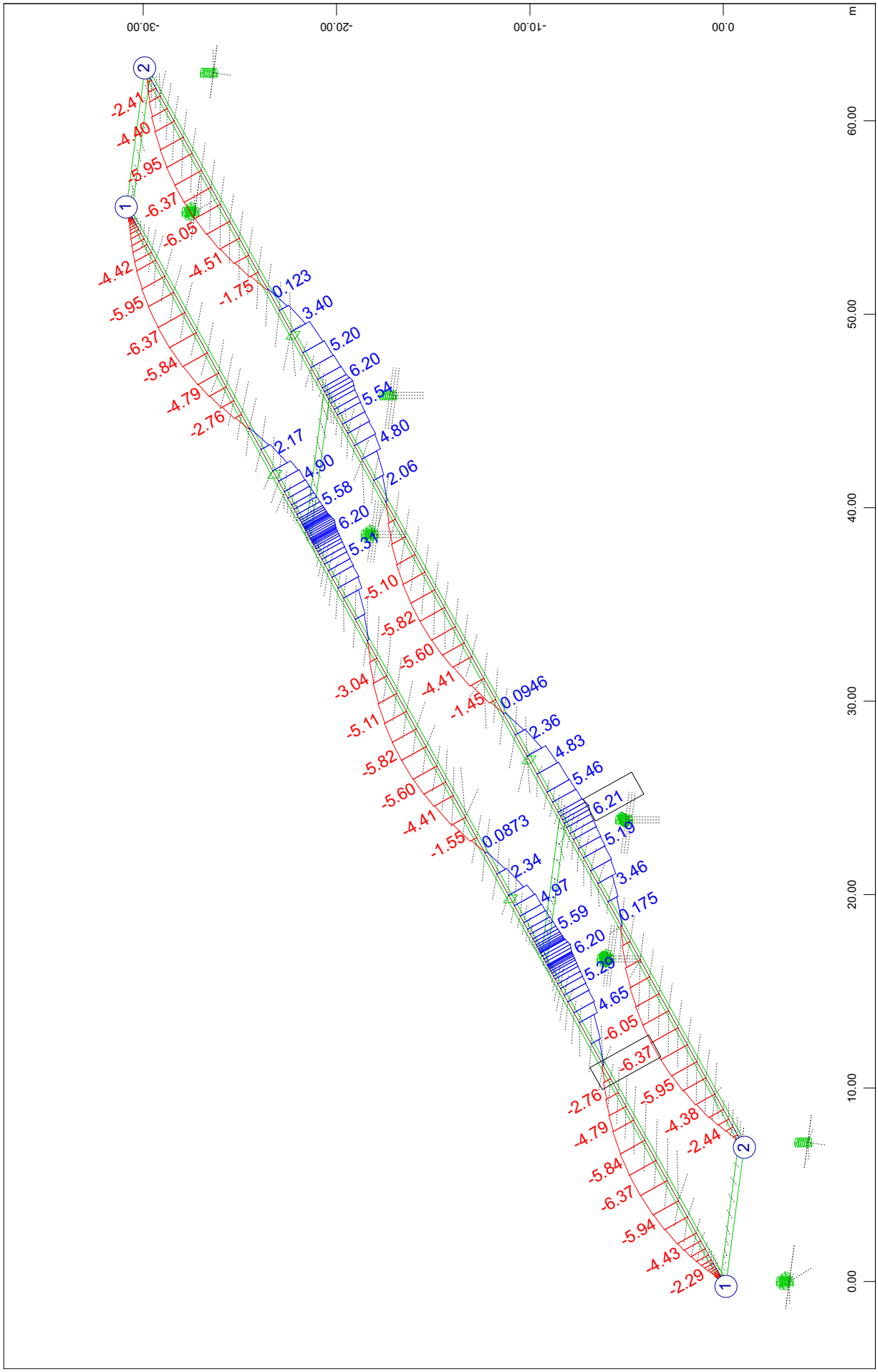

SOFiSTiK AG - www.sofistik.de

Composite bridge 38+50+38, b=14.25m, 2x2HL1100R HISTAR460 , slab 0.30m C30/37

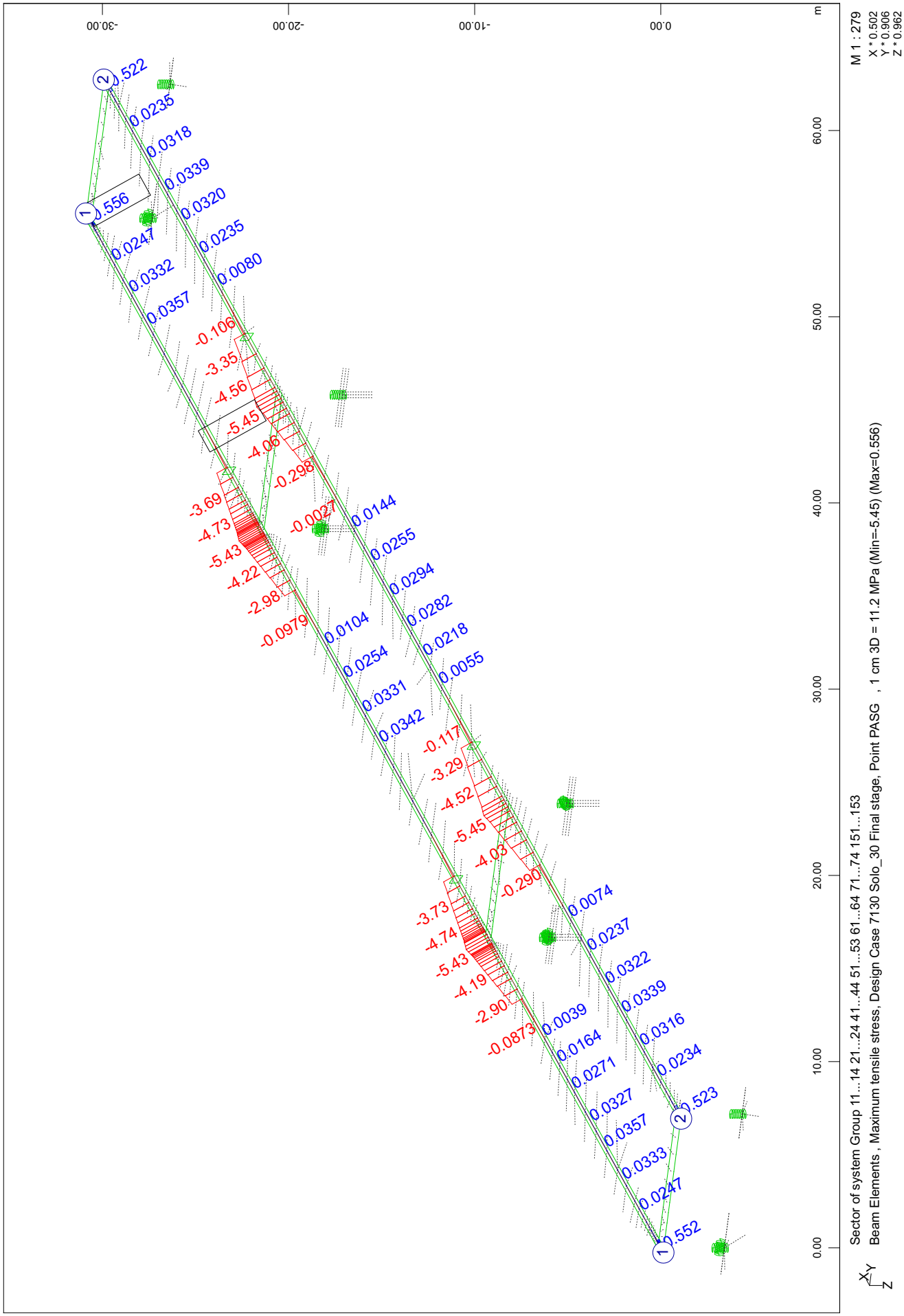

SOFiSTiK AG - www.sofistik.de

Composite bridge 38+50+38, b=14.25m, 2x2HL1100R HISTAR460 , slab 0.30m C30/37

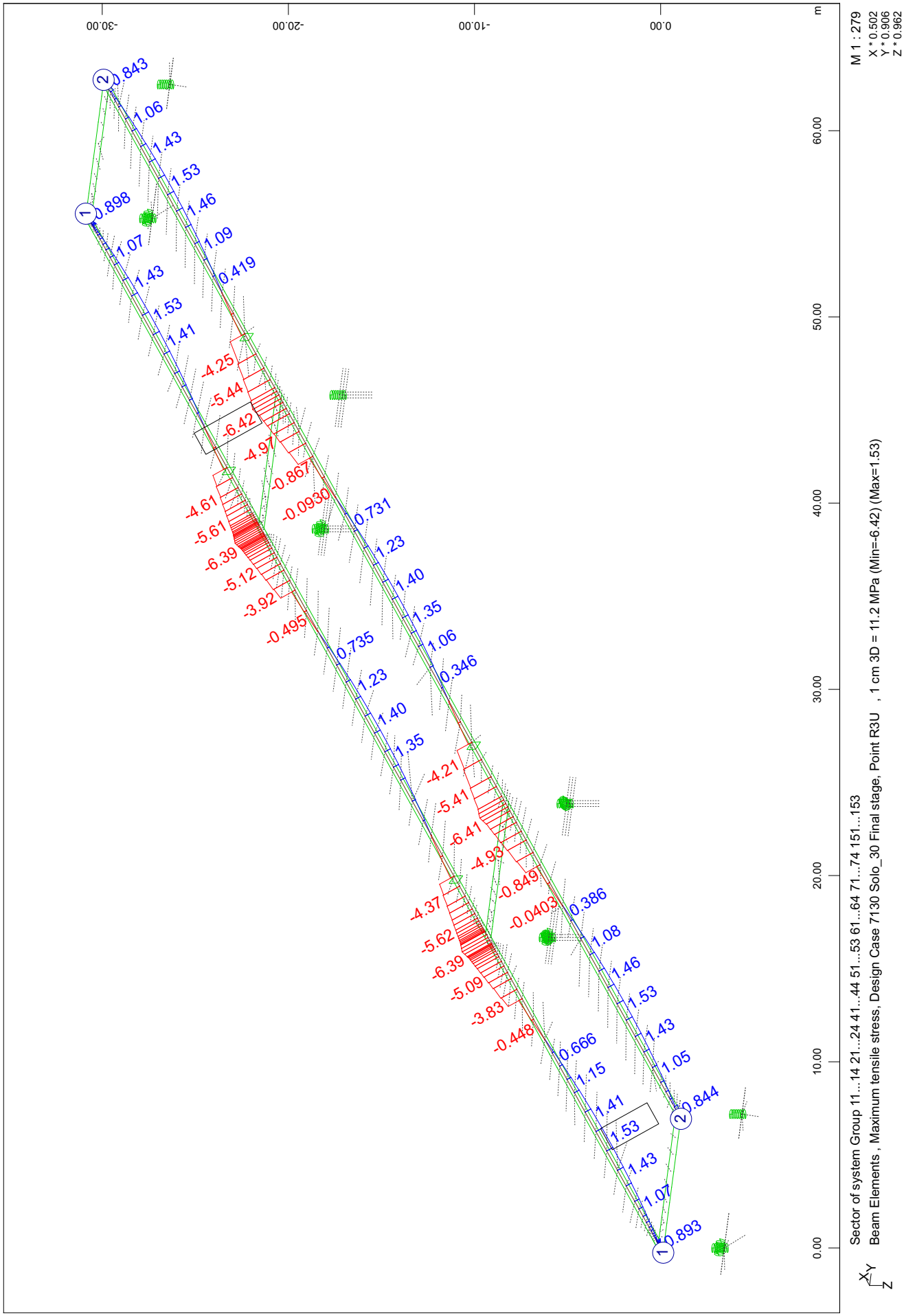

SOFiSTiK AG - www.sofistik.de

Composite bridge 38+50+38, b=14.25m, 2x2HL1100R HISTAR460 , slab 0.30m C30/37

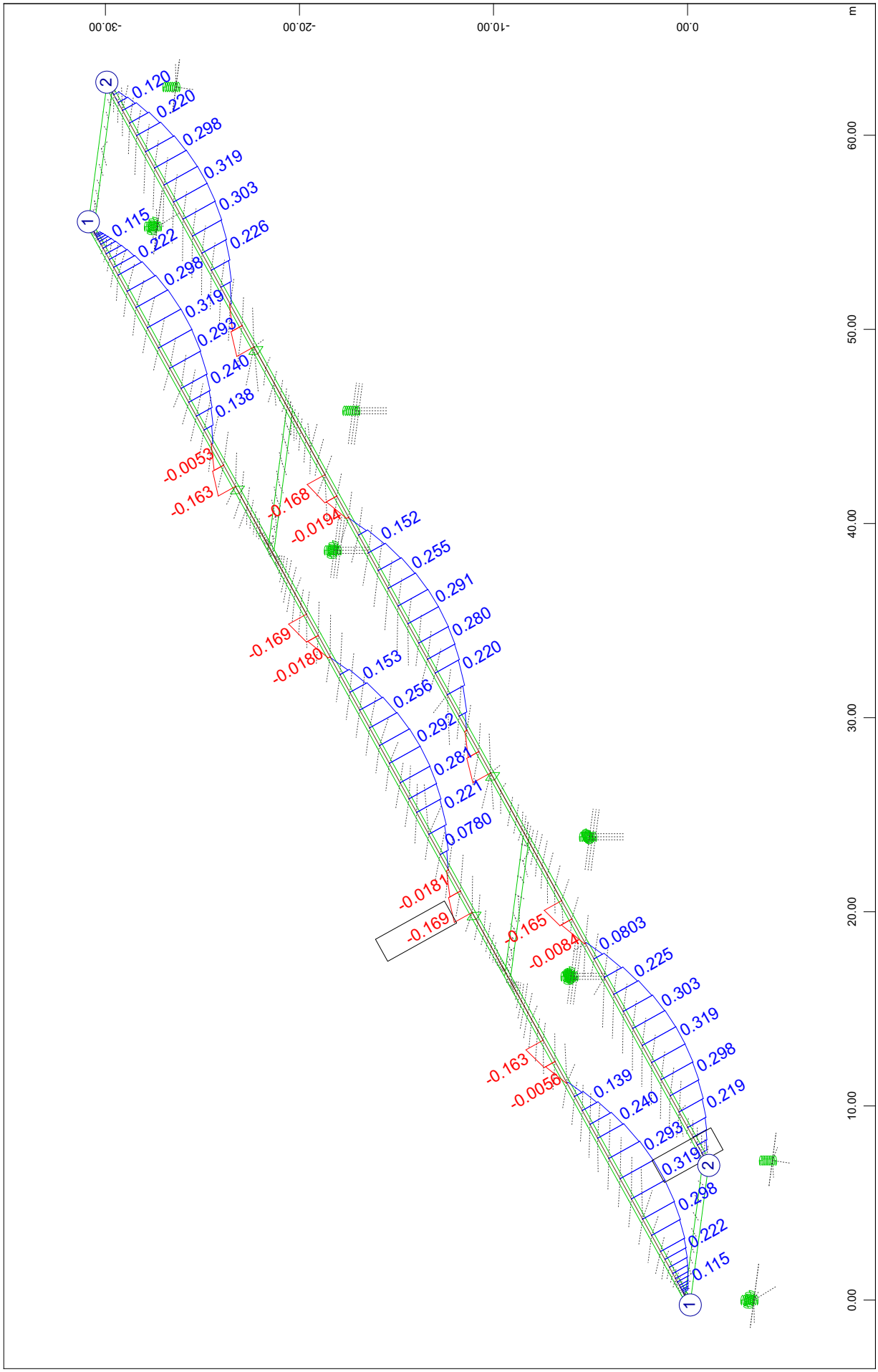

SOFiSTiK AG - www.sofistik.de

Composite bridge 38+50+38, b=14.25m, 2x2HL1100R HISTAR460 , slab 0.30m C30/37

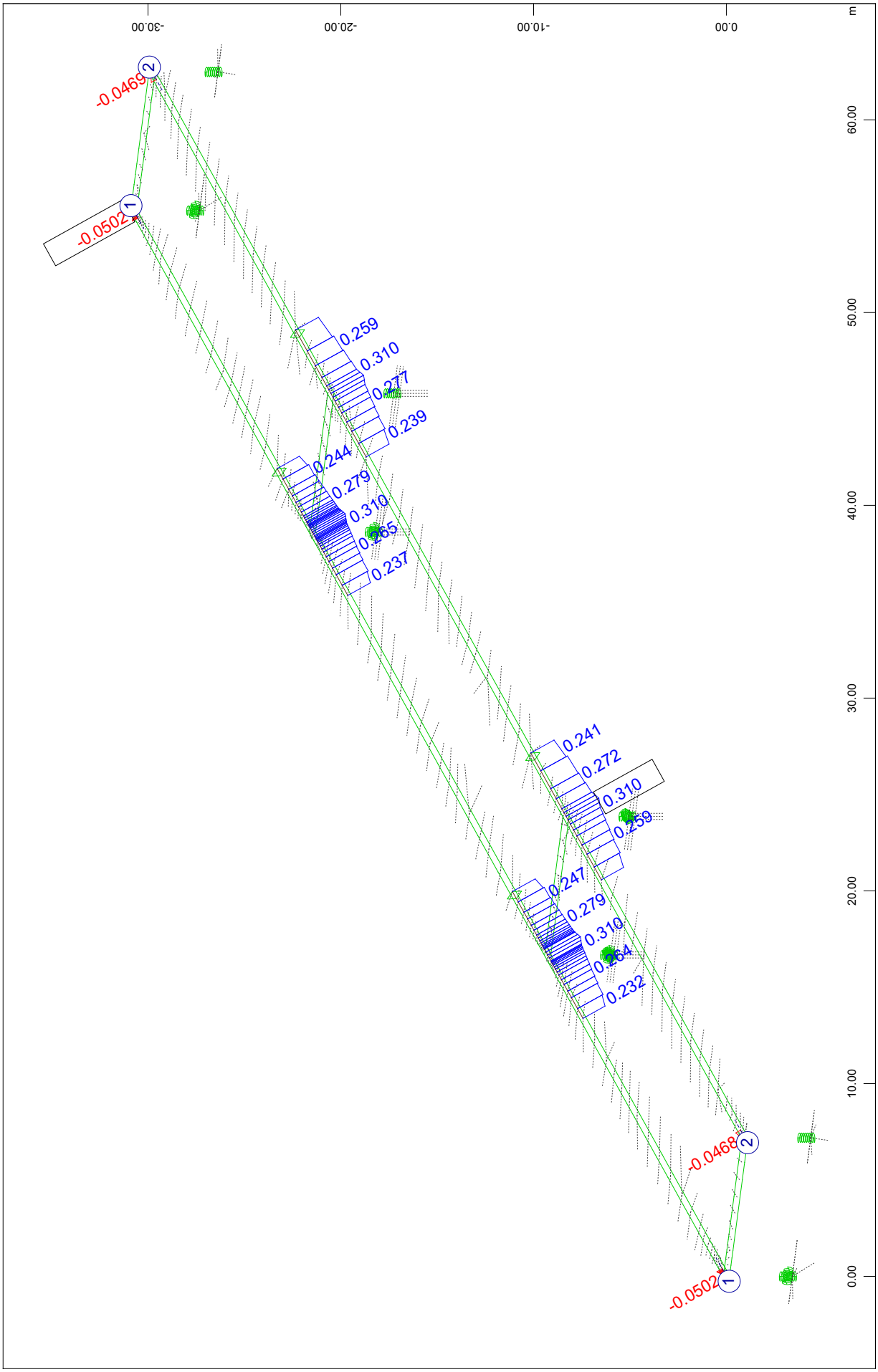

SOFiSTiK AG - www.sofistik.de

Composite bridge 38+50+38, b=14.25m, 2x2HL1100R HISTAR460 , slab 0.30m C30/37
Incremental results of CSM stages; CS35: C+S til opening 56days

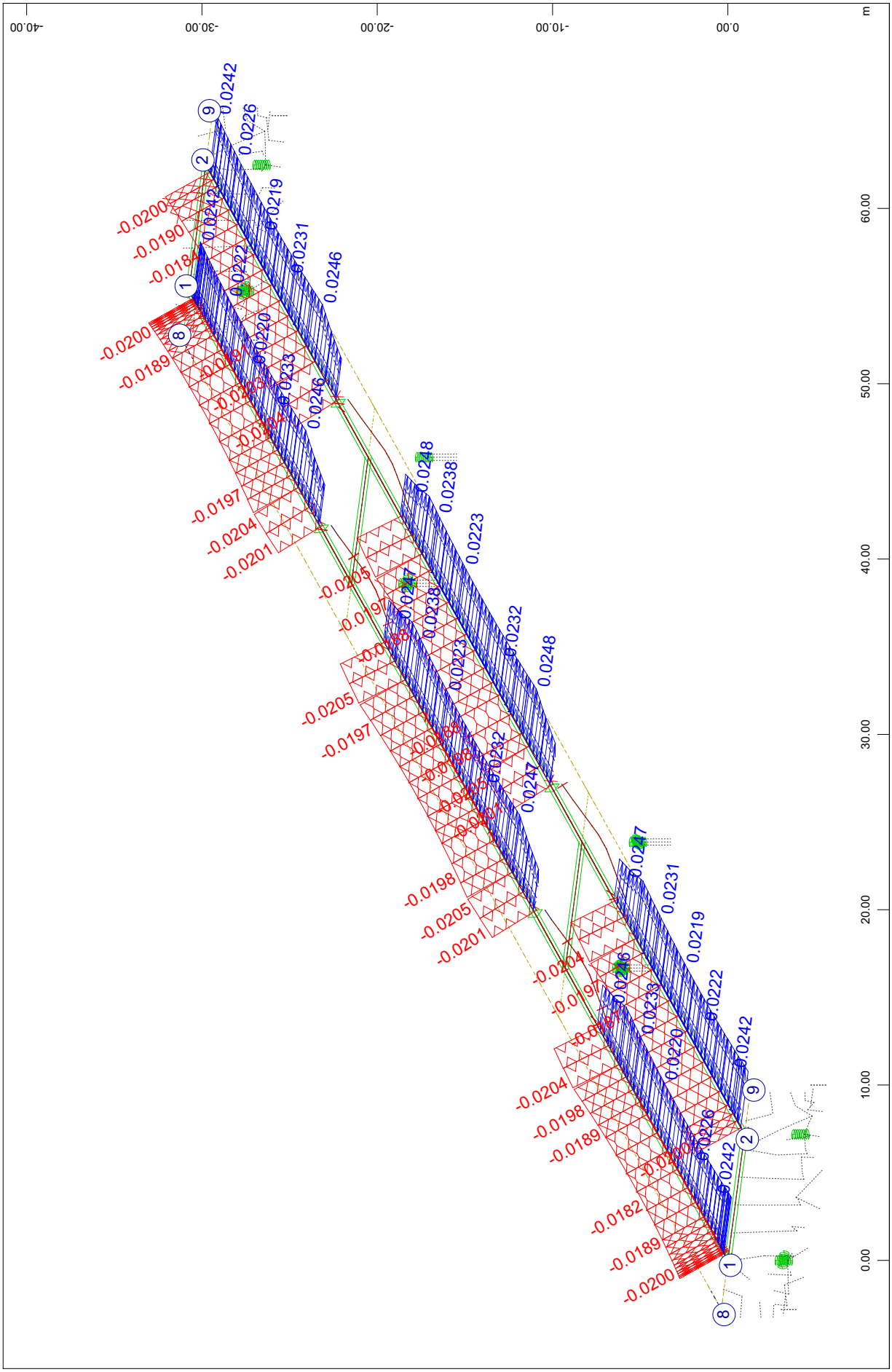

SOFiSTiK AG - www.sofistik.de

Composite bridge 38+50+38, b=14.25m, 2x2HL1100R HISTAR460 , slab 0.30m C30/37

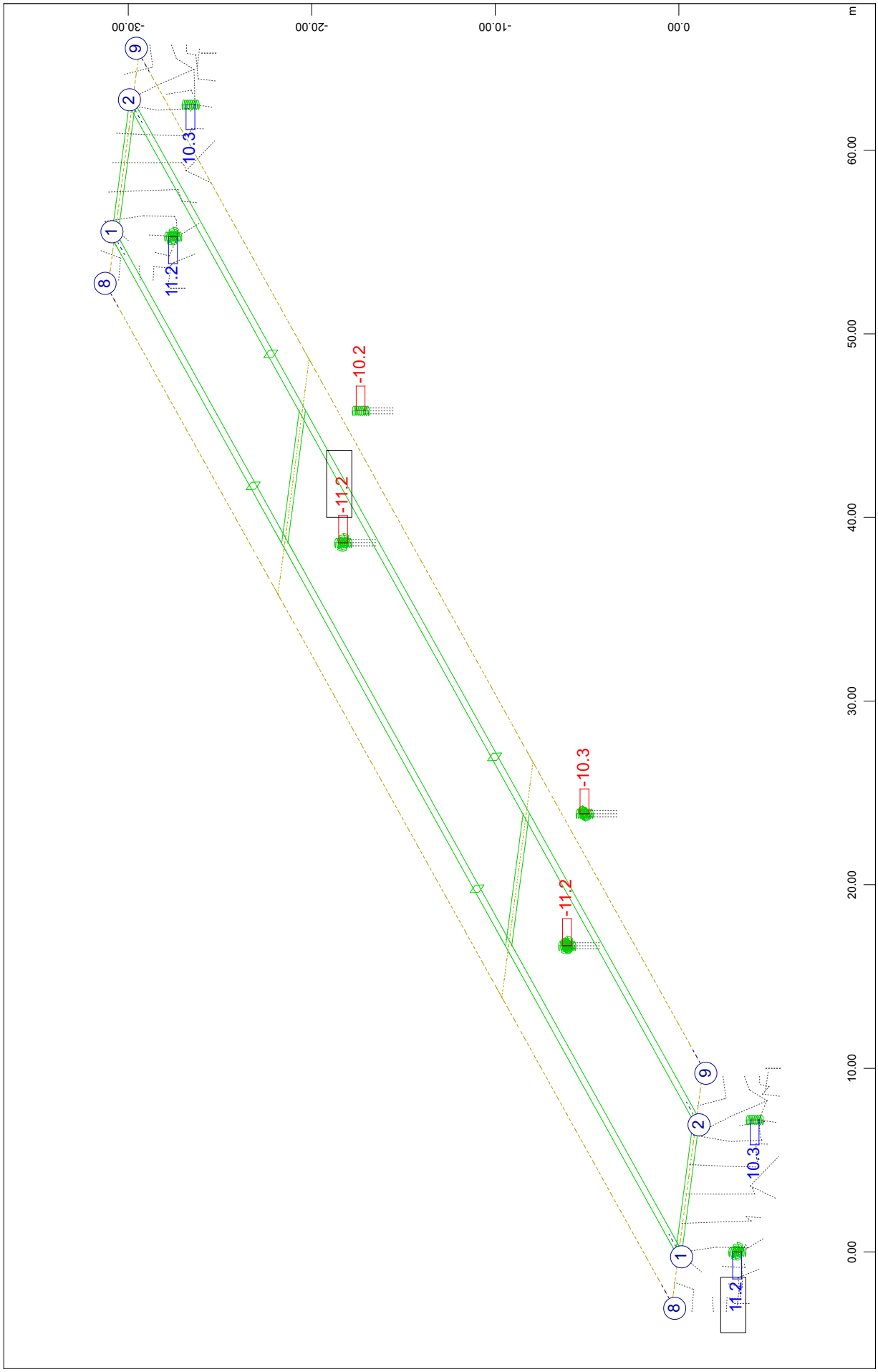

SOFiSTiK AG - www.sofistik.de

Composite bridge 38+50+38, b=14.25m, 2x2HL1100R HISTAR460 , slab 0.30m C30/37

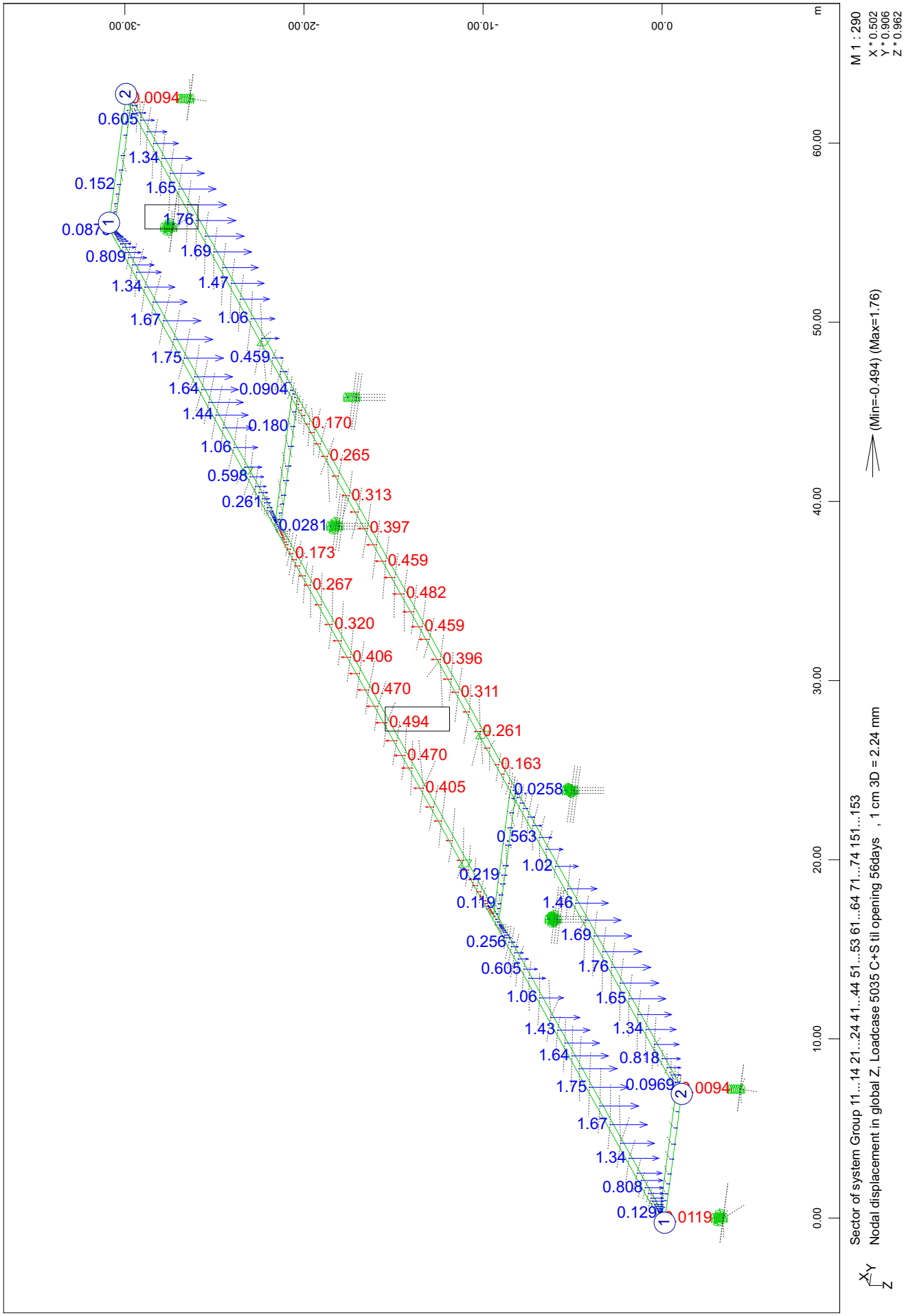

SOFiSTiK AG - www.sofistik.de

Composite bridge 38+50+38, b=14.25m, 2x2HL1100R HISTAR460 , slab 0.30m C30/37

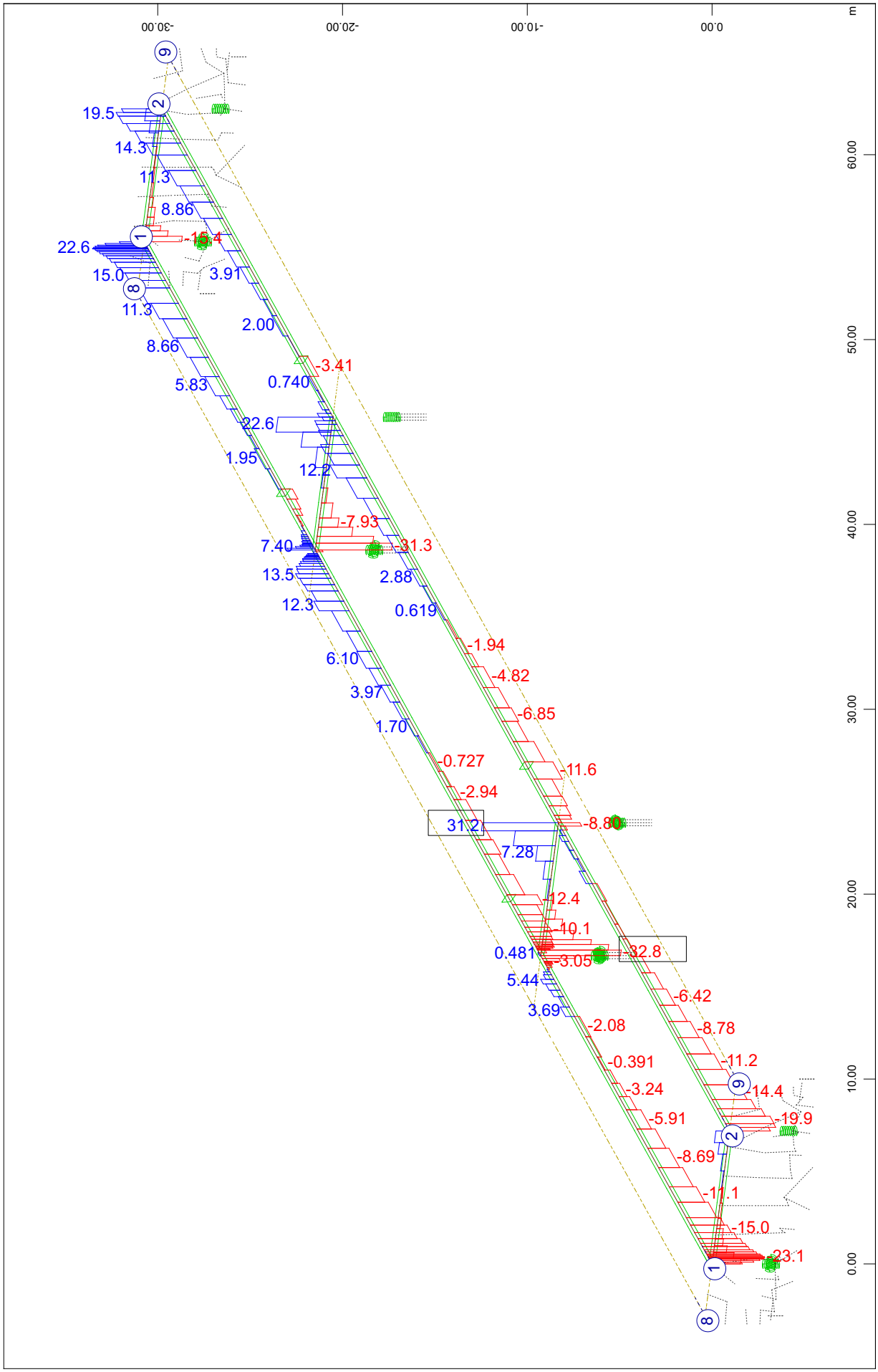

Composite bridge 38+50+38, b=14.25m, 2x2HL1100R HISTAR460 , slab 0.30m C30/37

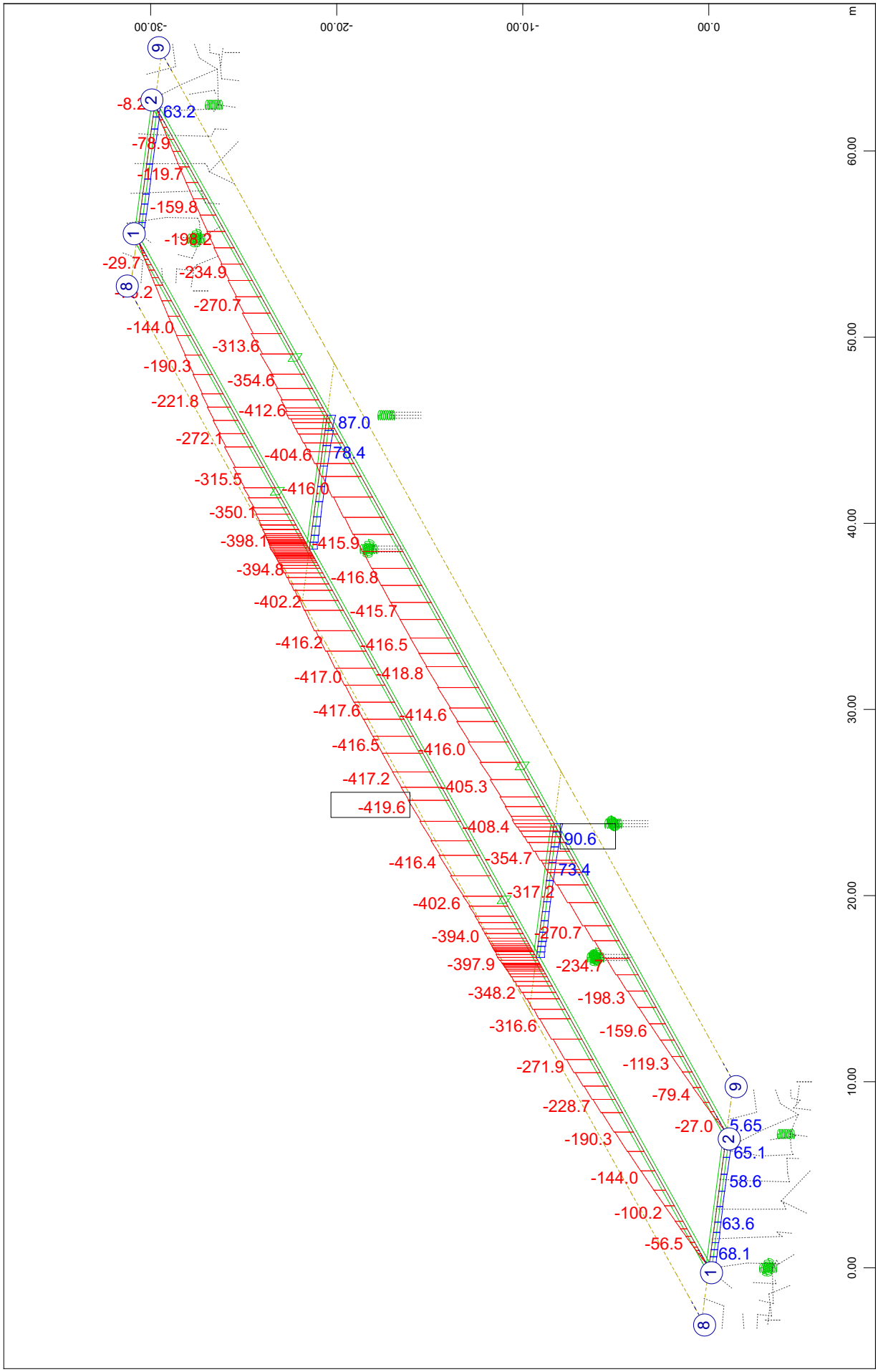

SOFiSTiK AG - www.sofistik.de

Composite bridge 38+50+38, b=14.25m, 2x2HL1100R HISTAR460 , slab 0.30m C30/37

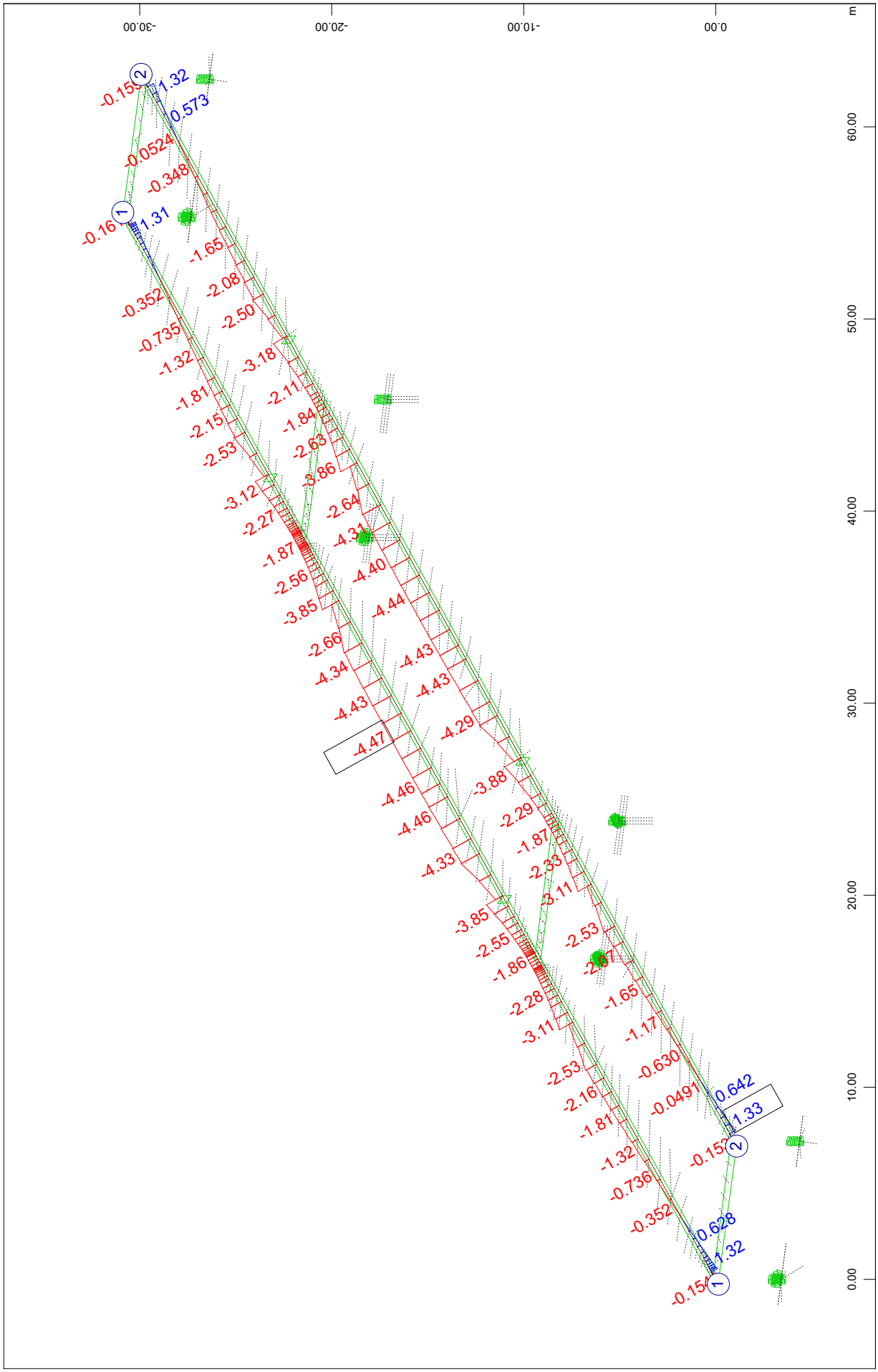

SOFiSTiK AG - www.sofistik.de

Composite bridge 38+50+38, b=14.25m, 2x2HL1100R HISTAR460 , slab 0.30m C30/37

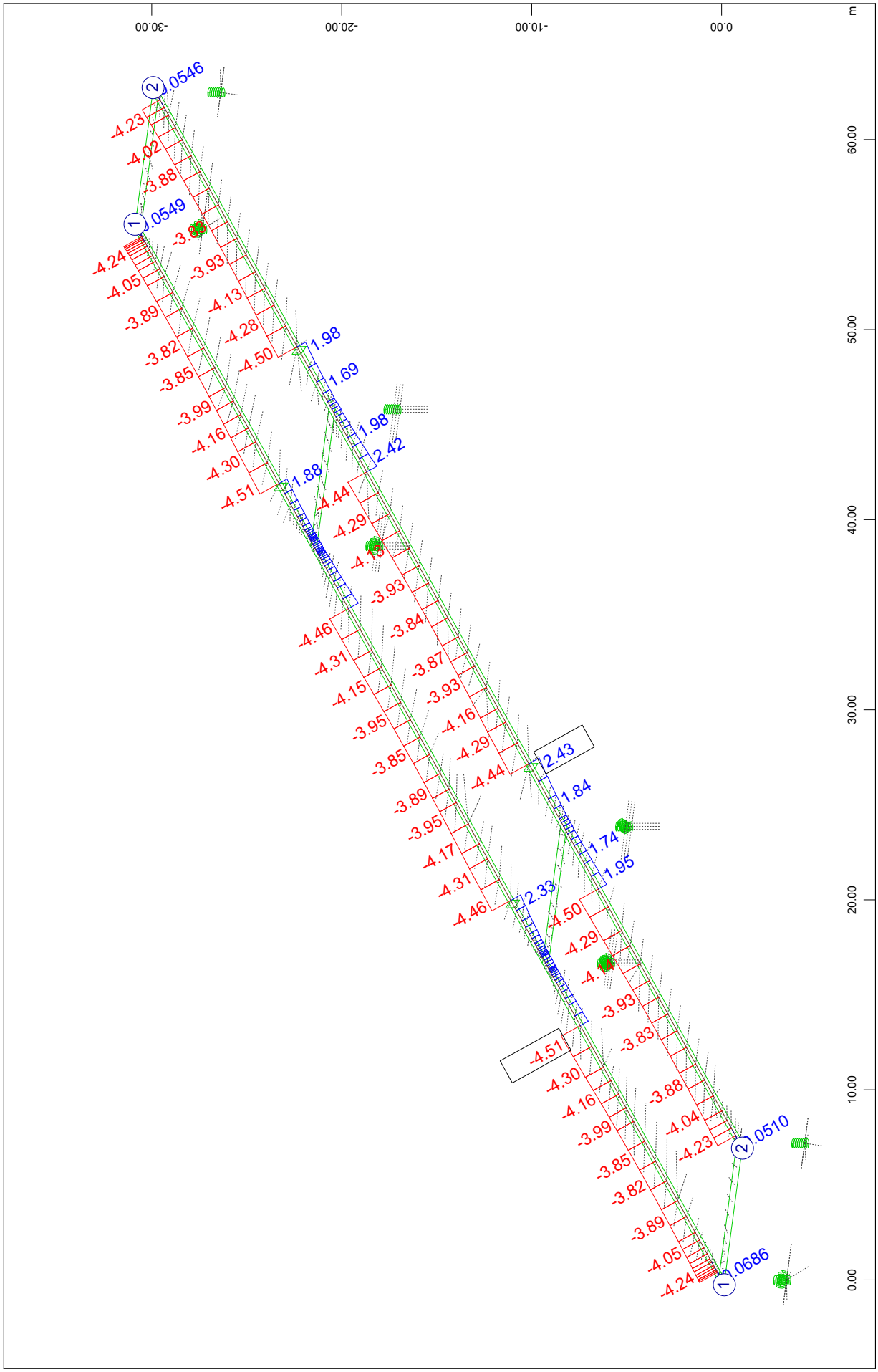

SOFiSTiK AG - www.sofistik.de

Composite bridge 38+50+38, b=14.25m, 2x2HL1100R HISTAR460 , slab 0.30m C30/37

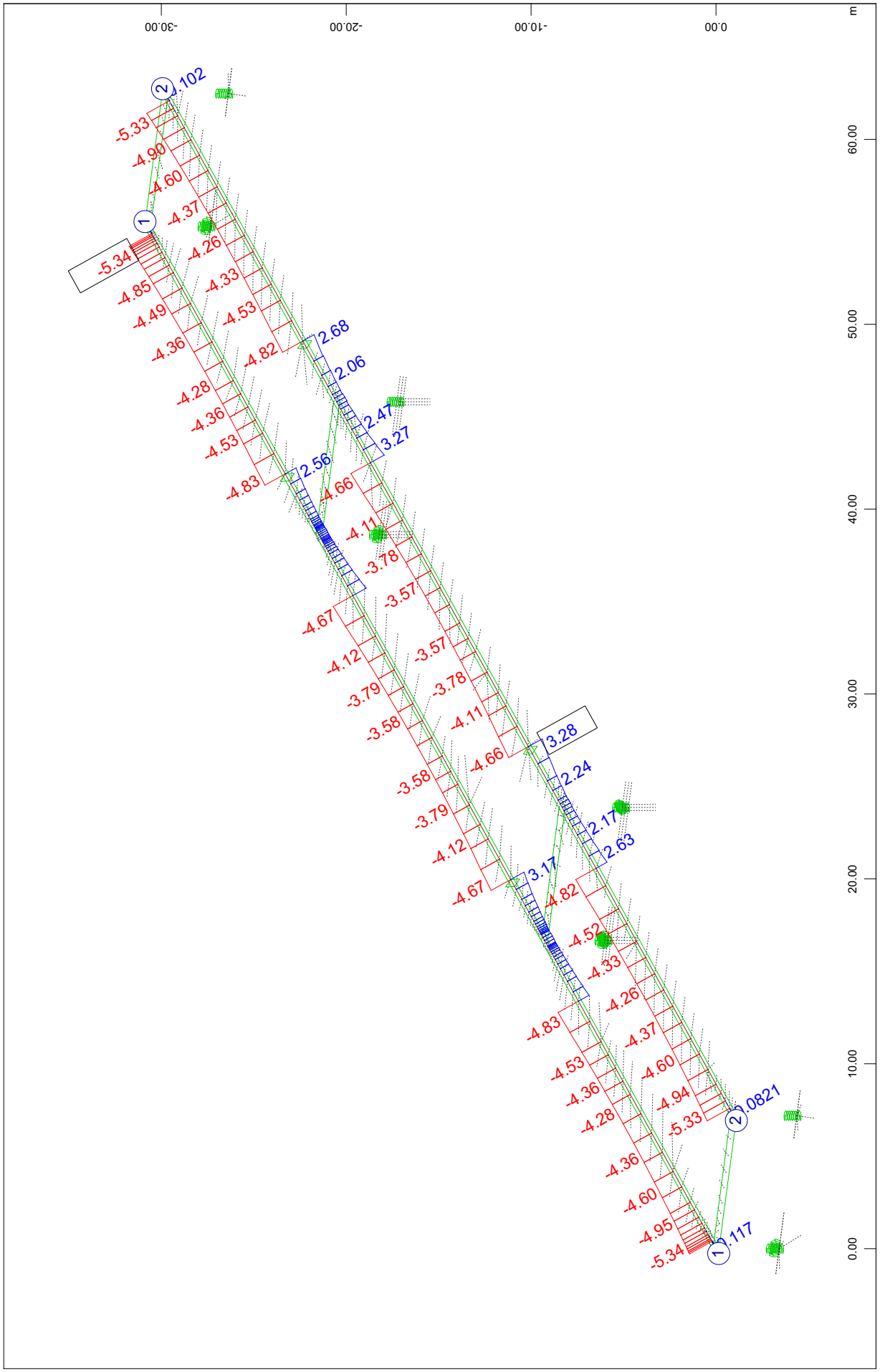

Composite bridge 38+50+38, b=14.25m, 2x2HL1100R HISTAR460 , slab 0.30m C30/37

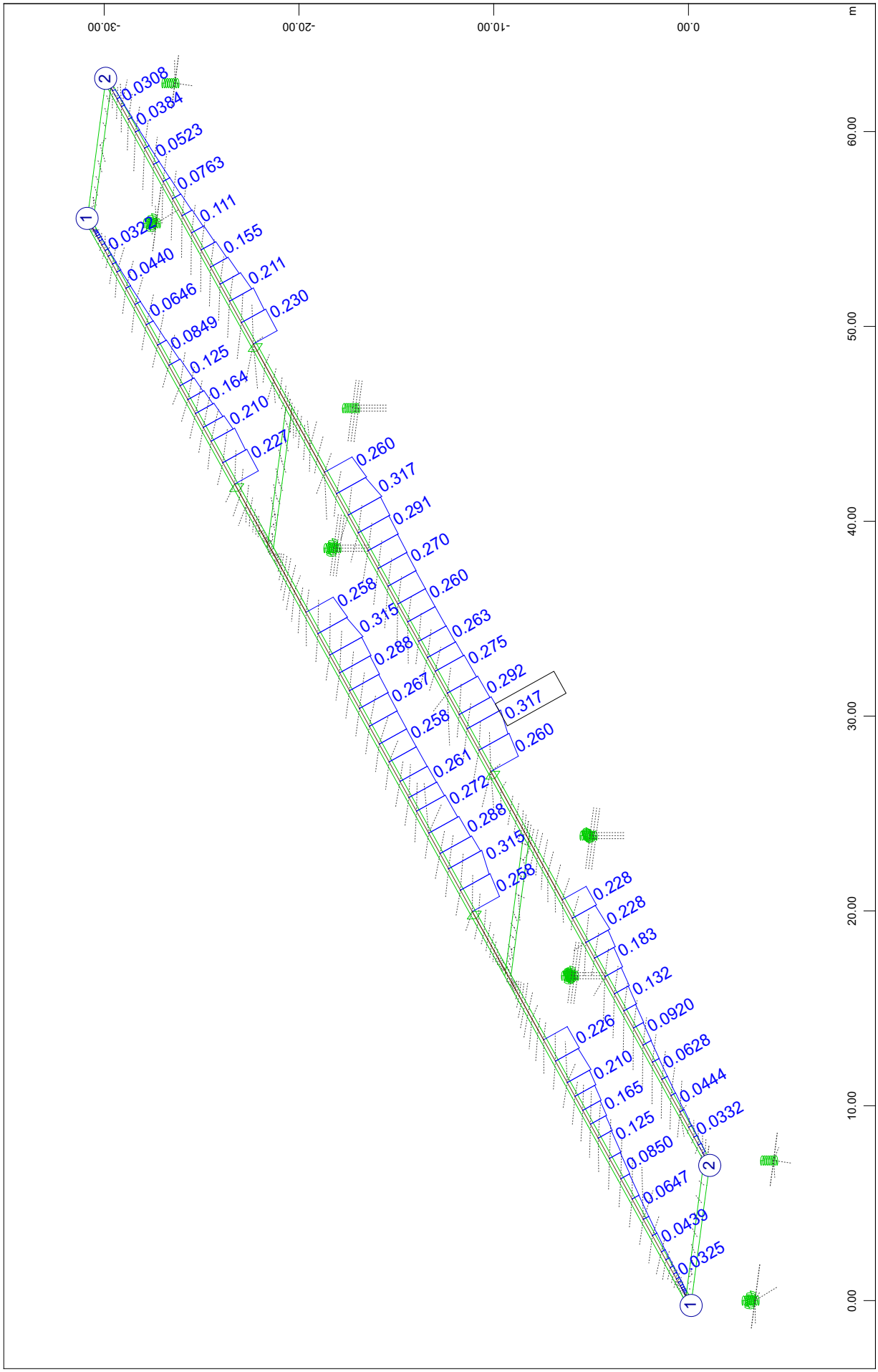

SOFiSTiK AG - www.sofistik.de

Composite bridge 38+50+38, b=14.25m, 2x2HL1100R HISTAR460 , slab 0.30m C30/37

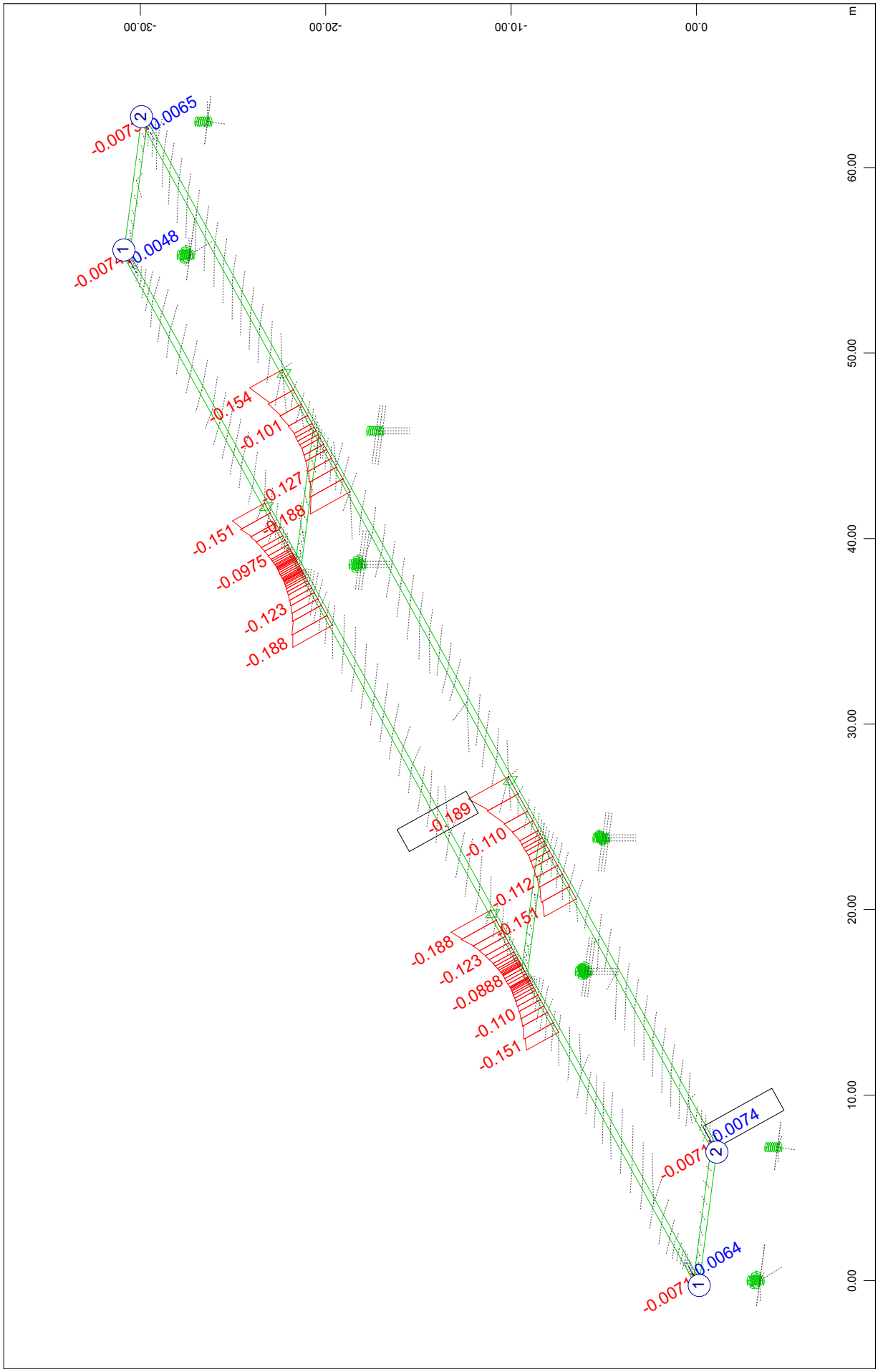

SOFiSTiK AG - www.sofistik.de

Composite bridge 38+50+38, b=14.25m, 2x2HL1100R HISTAR460 , slab 0.30m C30/37
Incremental results of CSM stages; CS40: superimposed dead loads

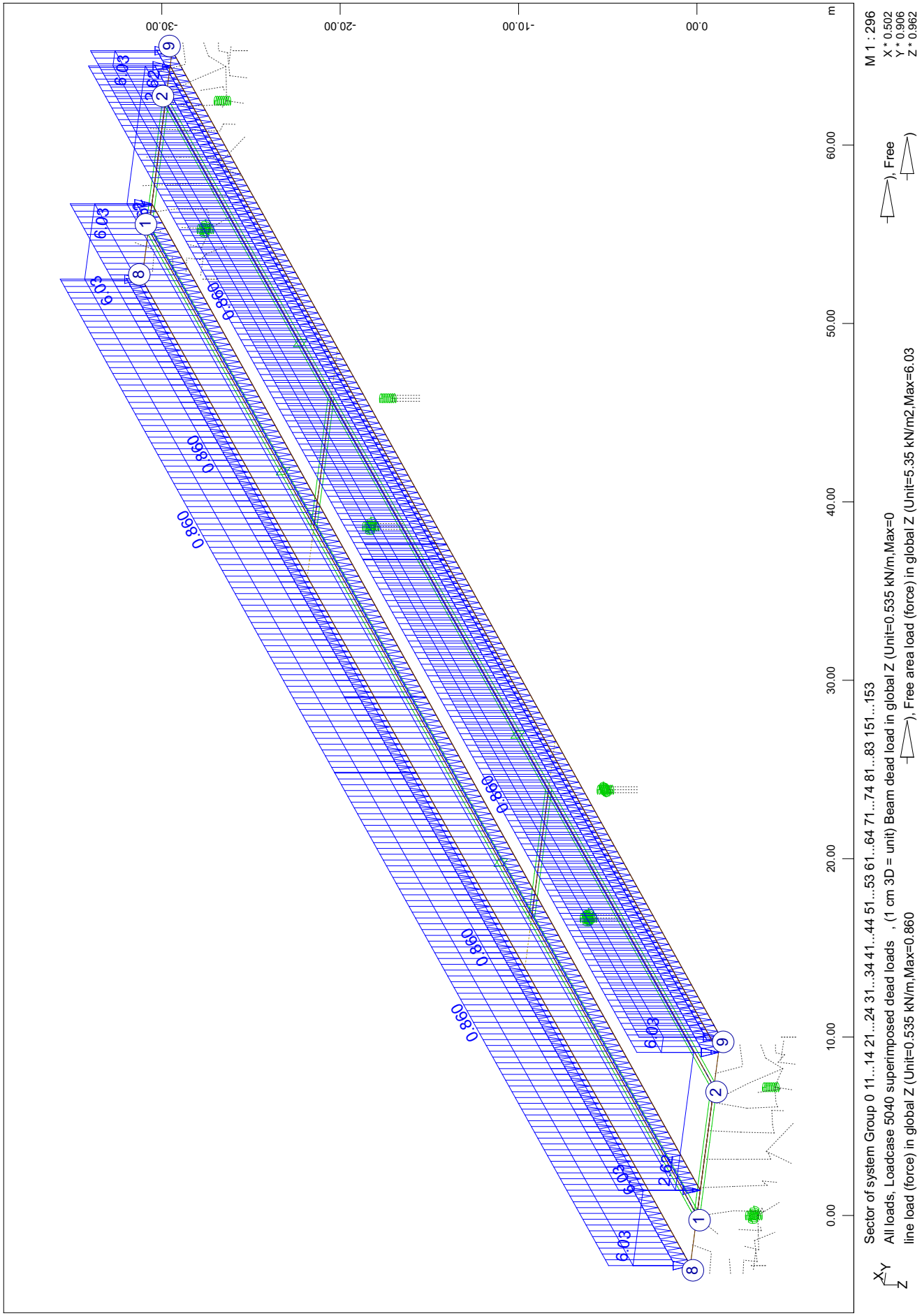

SOFiSTiK AG - www.sofistik.de

Composite bridge 38+50+38, b=14.25m, 2x2HL1100R HISTAR460 , slab 0.30m C30/37

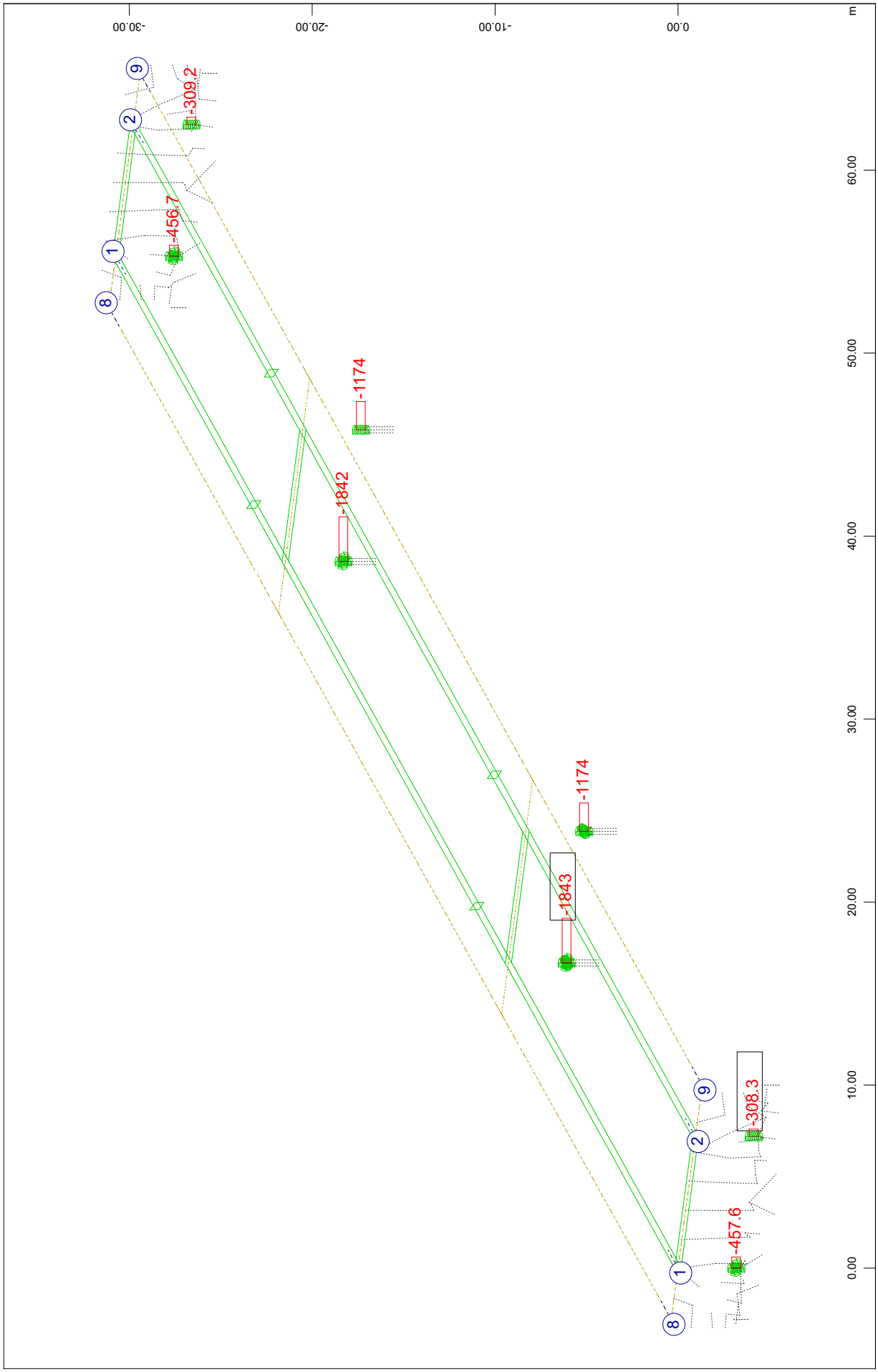

SOFiSTiK AG - www.sofistik.de

Composite bridge 38+50+38, b=14.25m, 2x2HL1100R HISTAR460 , slab 0.30m C30/37

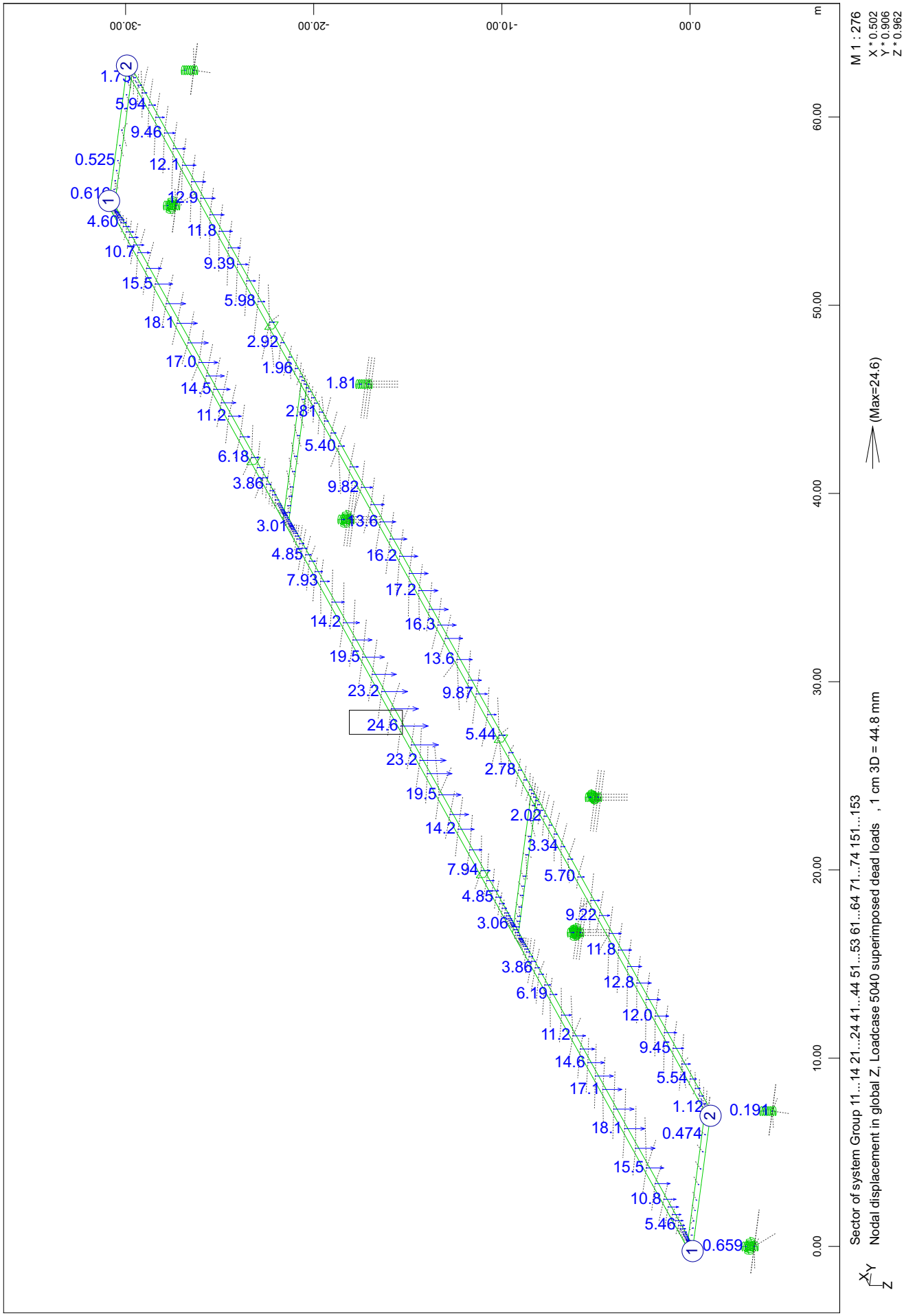

SOFiSTiK AG - www.sofistik.de

Composite bridge 38+50+38, b=14.25m, 2x2HL1100R HISTAR460 , slab 0.30m C30/37

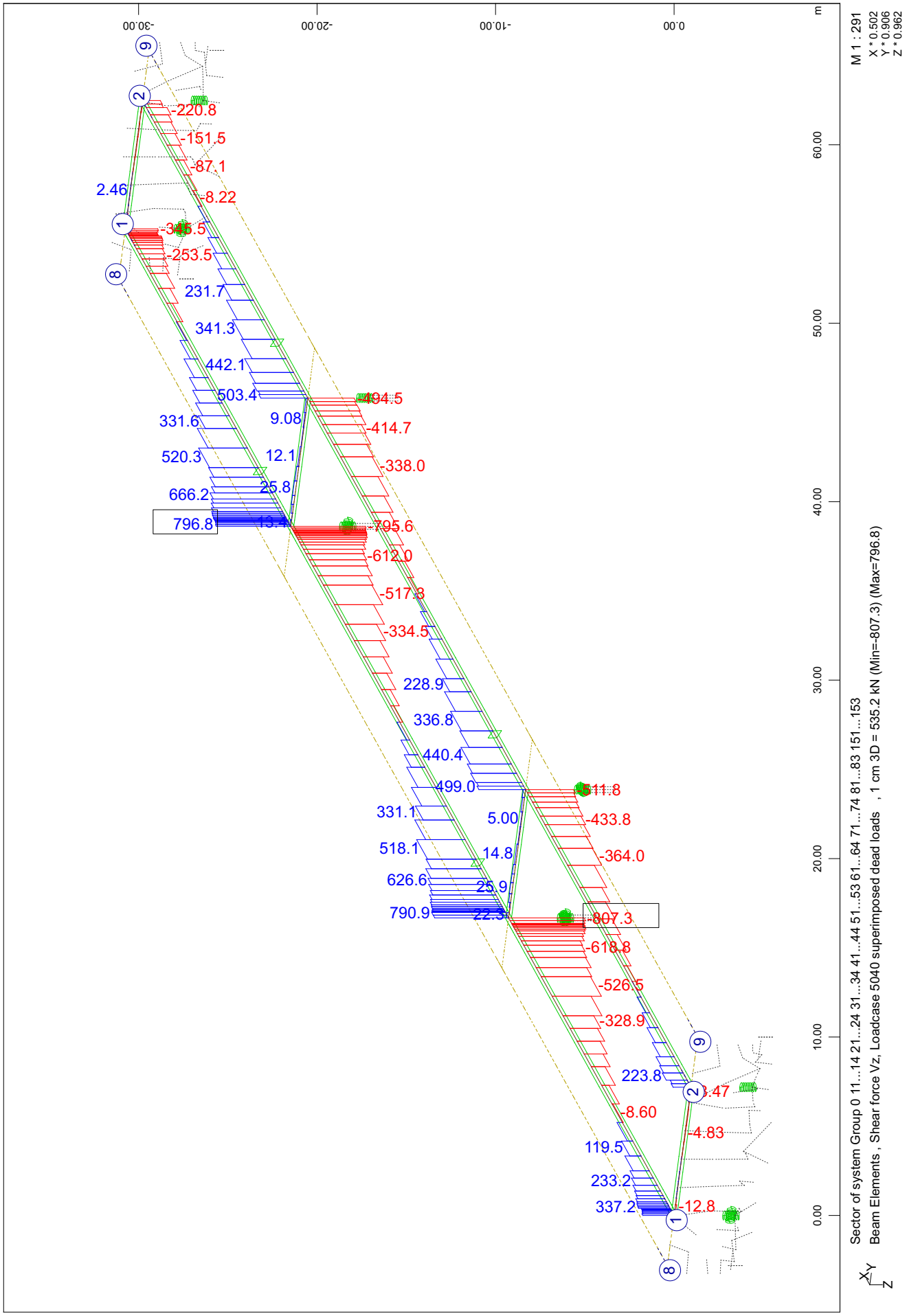

Composite bridge 38+50+38, b=14.25m, 2x2HL1100R HISTAR460 , slab 0.30m C30/37

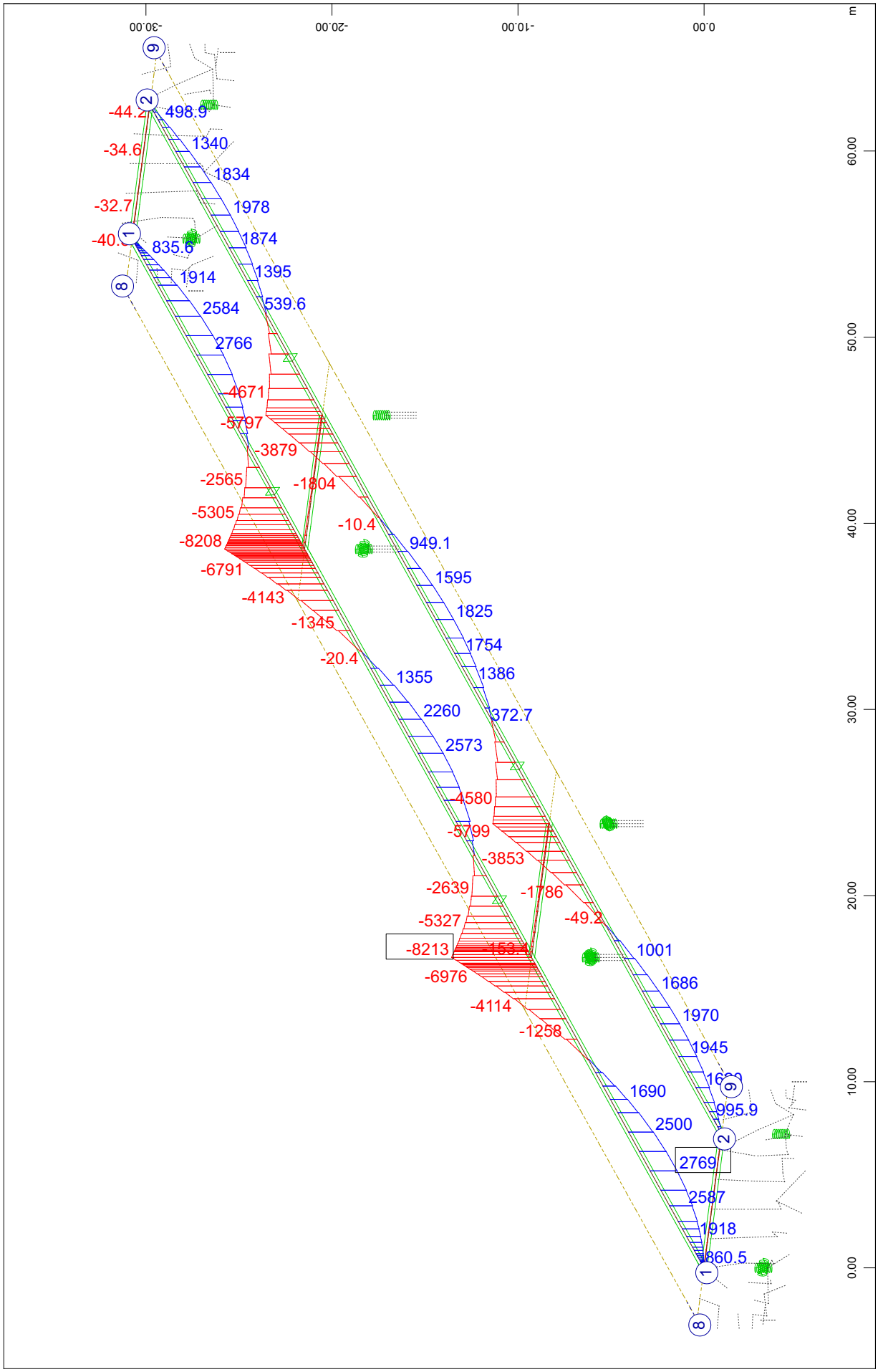

SOFiSTiK AG - www.sofistik.de

Composite bridge 38+50+38, b=14.25m, 2x2HL1100R HISTAR460 , slab 0.30m C30/37

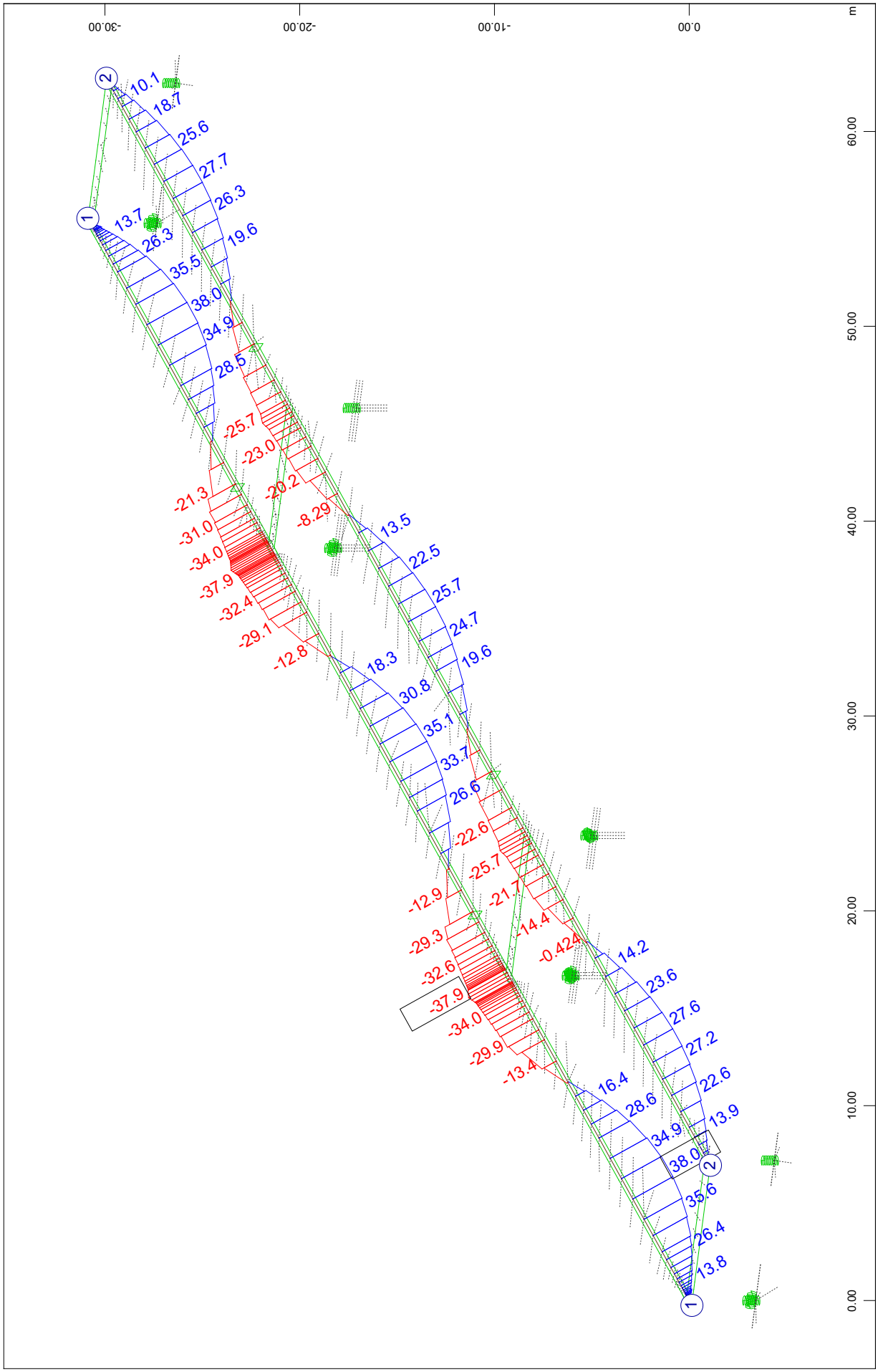

SOFiSTiK AG - www.sofistik.de

Composite bridge 38+50+38, b=14.25m, 2x2HL1100R HISTAR460 , slab 0.30m C30/37

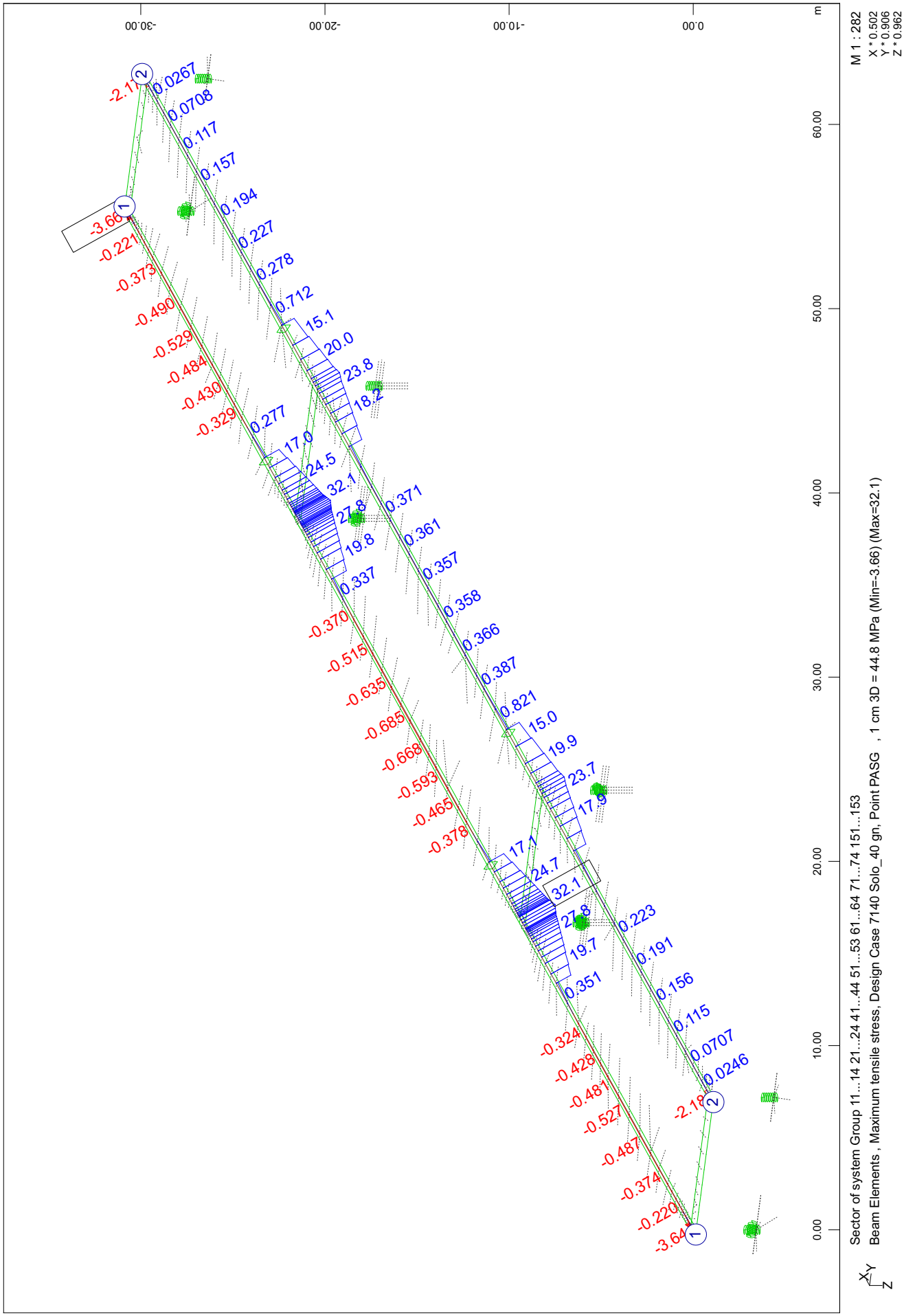

Composite bridge 38+50+38, b=14.25m, 2x2HL1100R HISTAR460 , slab 0.30m C30/37

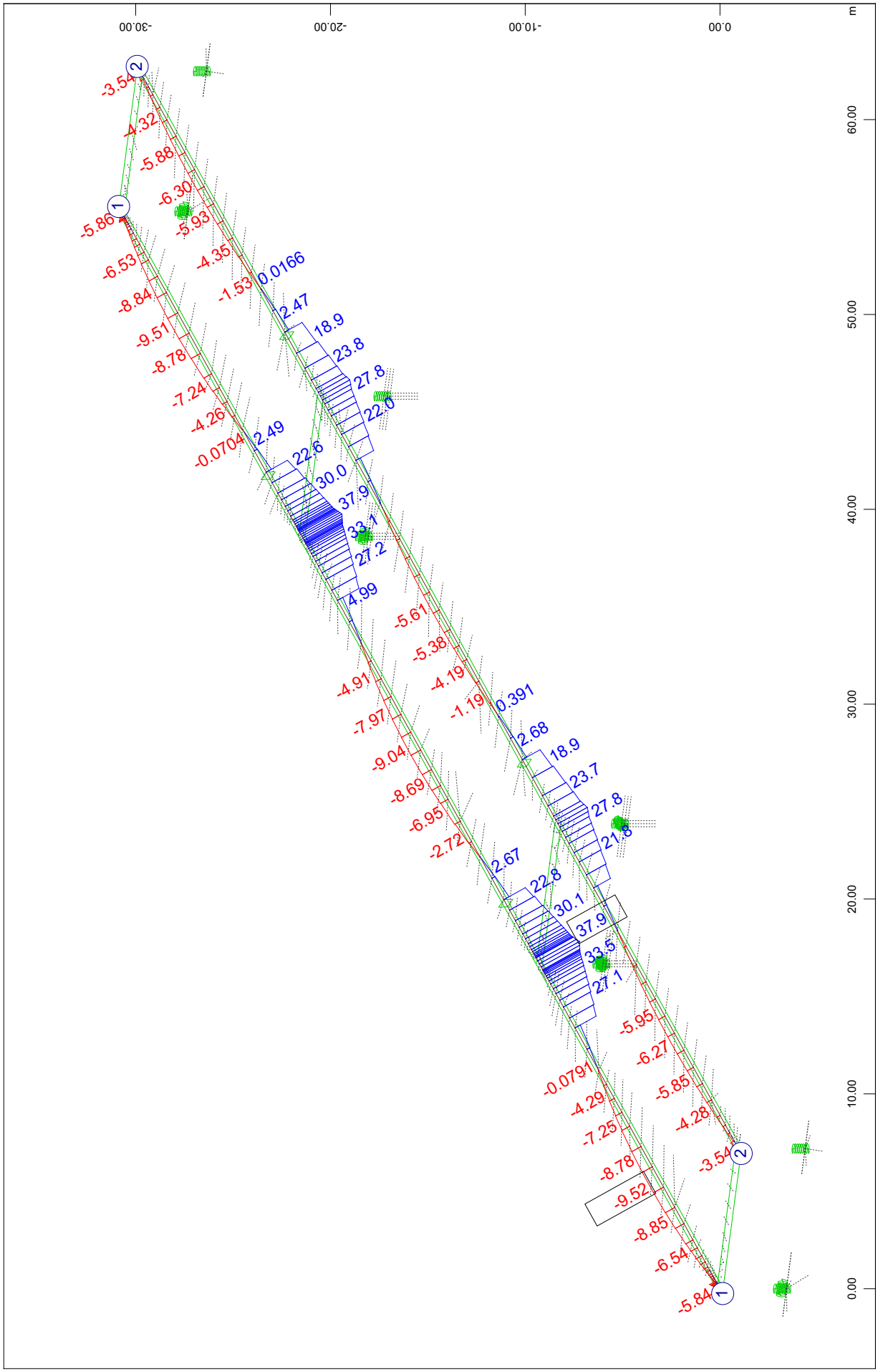

SOFiSTiK AG - www.sofistik.de

Composite bridge 38+50+38, b=14.25m, 2x2HL1100R HISTAR460 , slab 0.30m C30/37

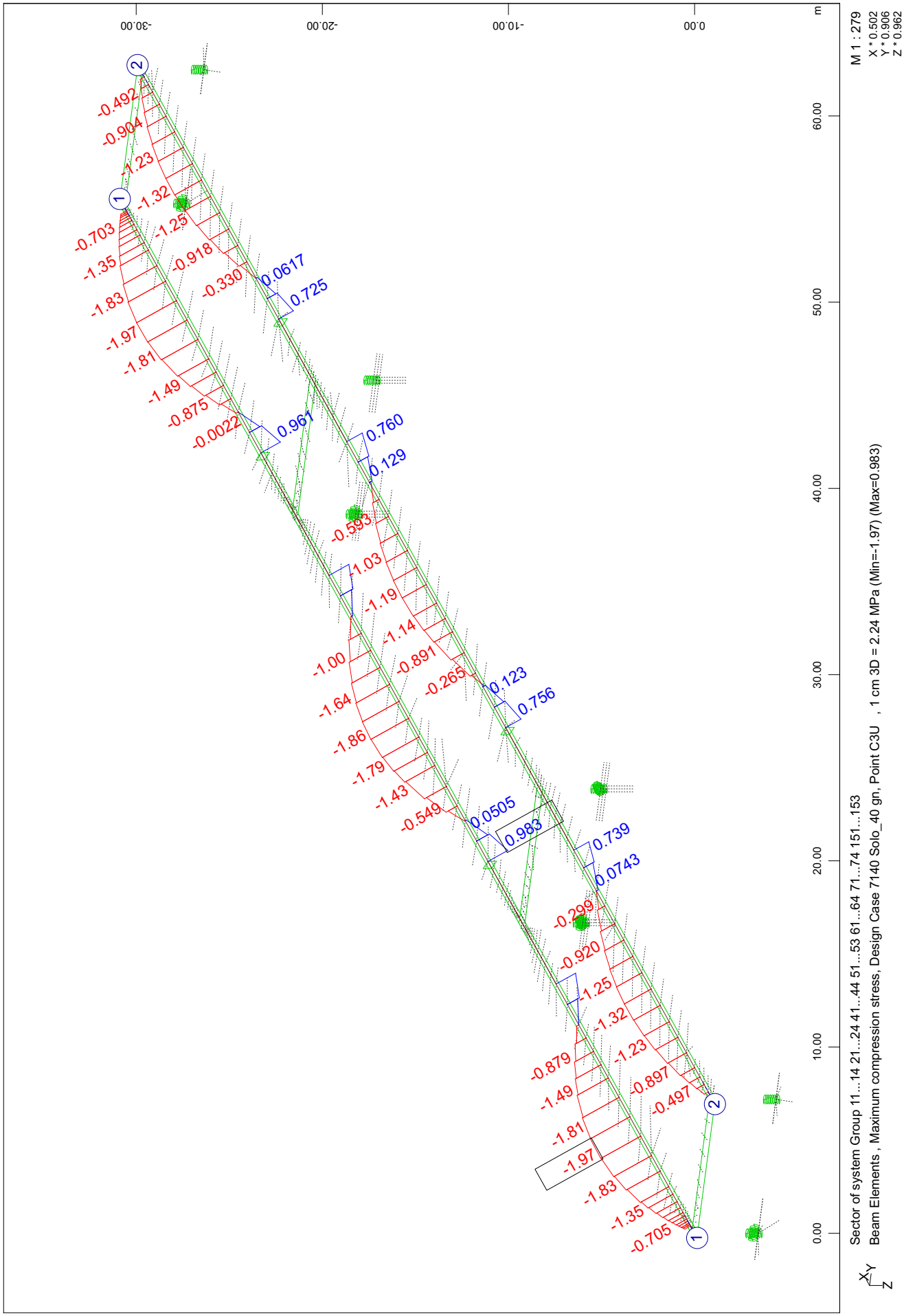

SOFiSTiK AG - www.sofistik.de

Composite bridge 38+50+38, b=14.25m, 2x2HL1100R HISTAR460 , slab 0.30m C30/37

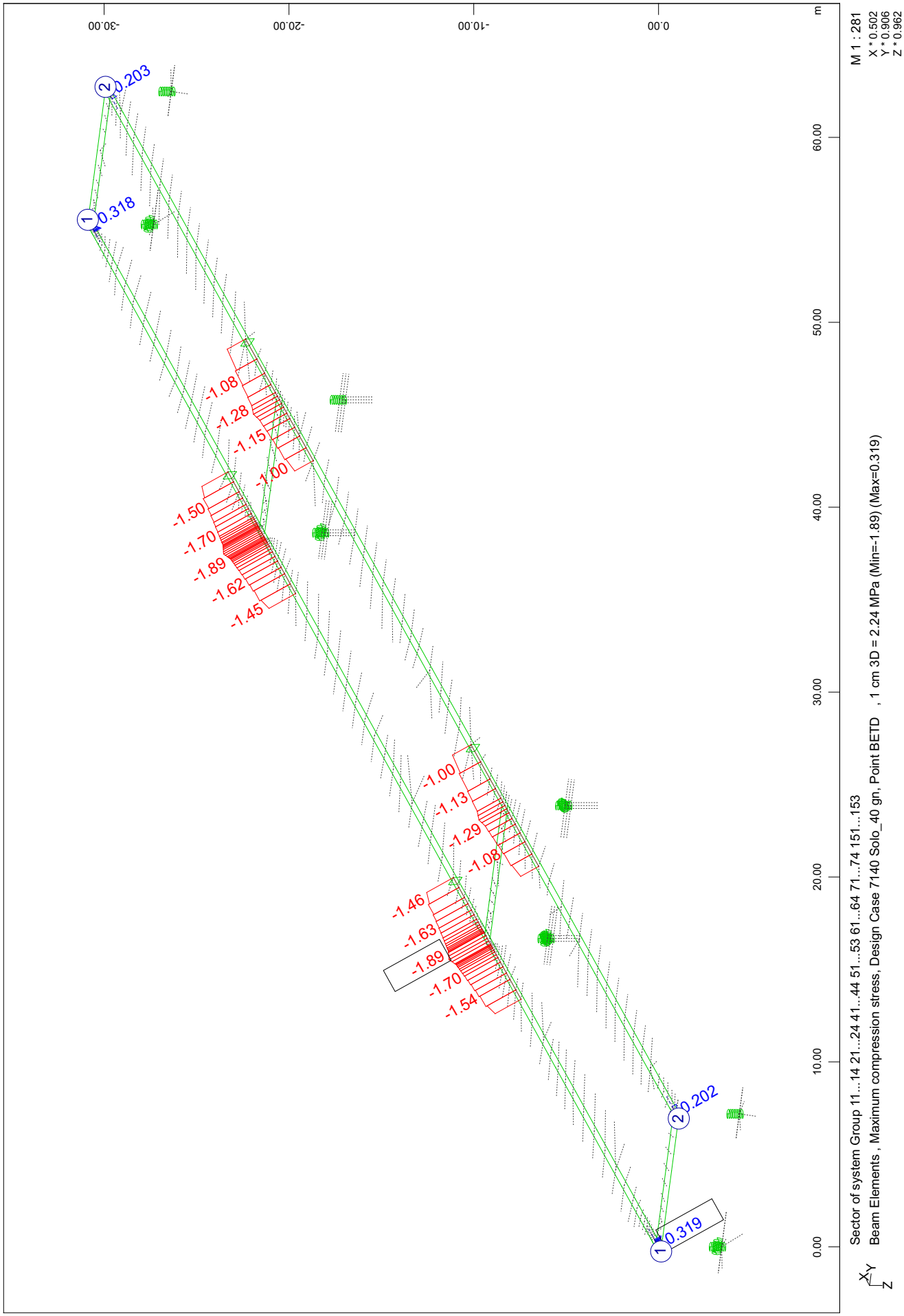

SOFiSTiK AG - www.sofistik.de

Composite bridge 38+50+38, b=14.25m, 2x2HL1100R HISTAR460 , slab 0.30m C30/37
Incremental results of CSM stages; CS45: C+S 36500days part 1 from 5

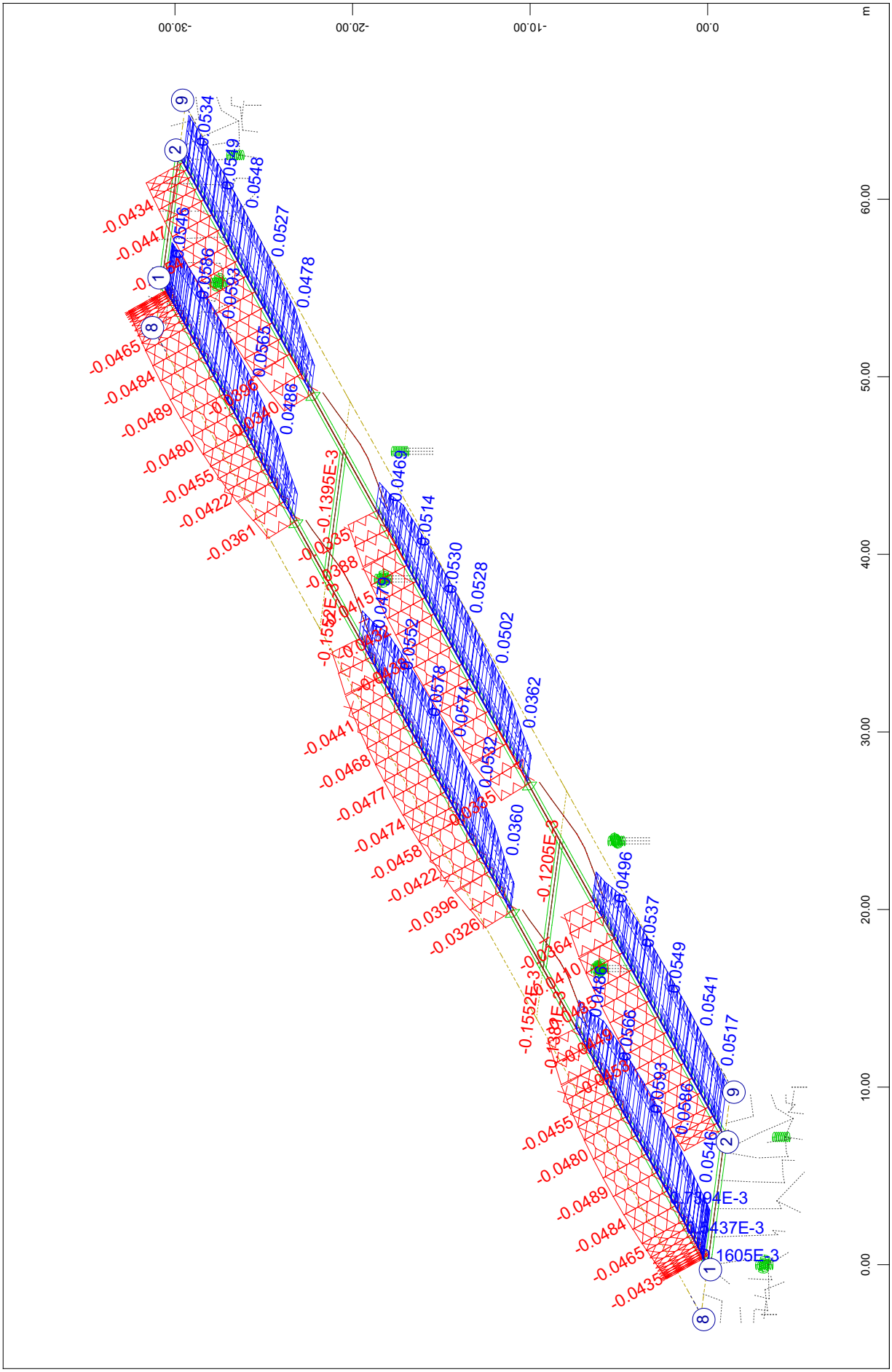

SOFiSTiK AG - www.sofistik.de

Composite bridge 38+50+38, b=14.25m, 2x2HL1100R HISTAR460 , slab 0.30m C30/37

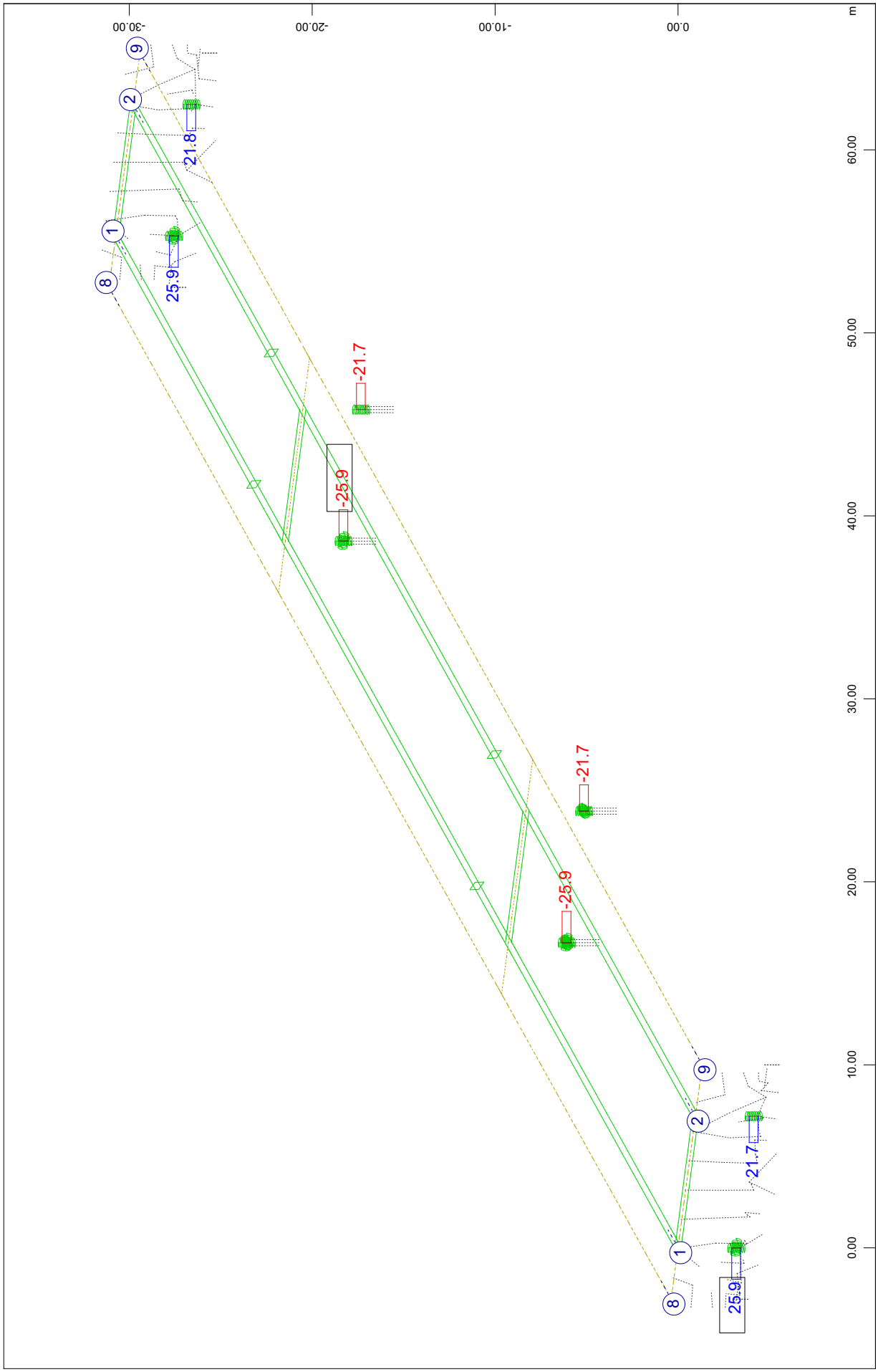

SOFiSTiK AG - www.sofistik.de

Composite bridge 38+50+38, b=14.25m, 2x2HL1100R HISTAR460 , slab 0.30m C30/37

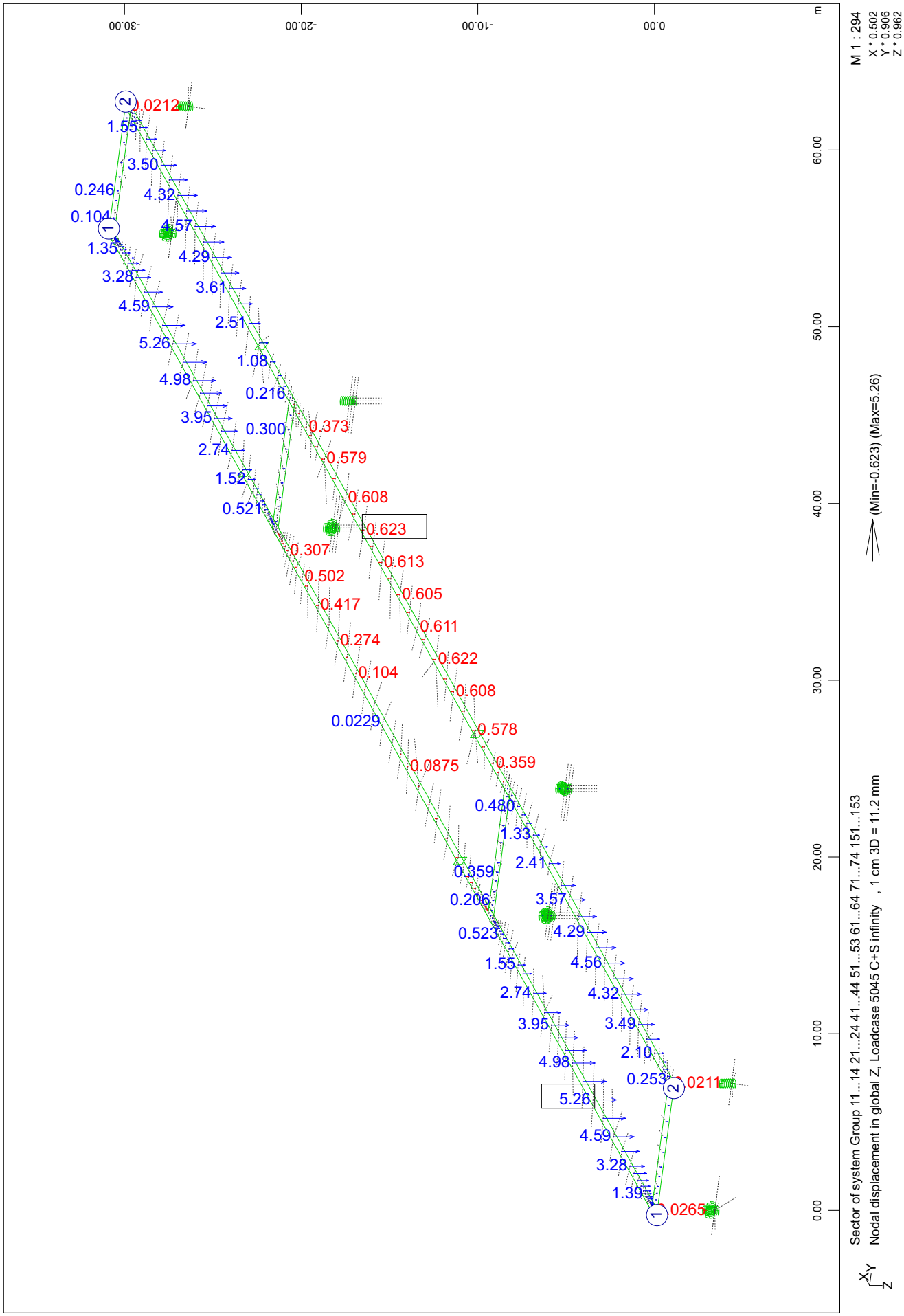

Composite bridge 38+50+38, b=14.25m, 2x2HL1100R HISTAR460 , slab 0.30m C30/37

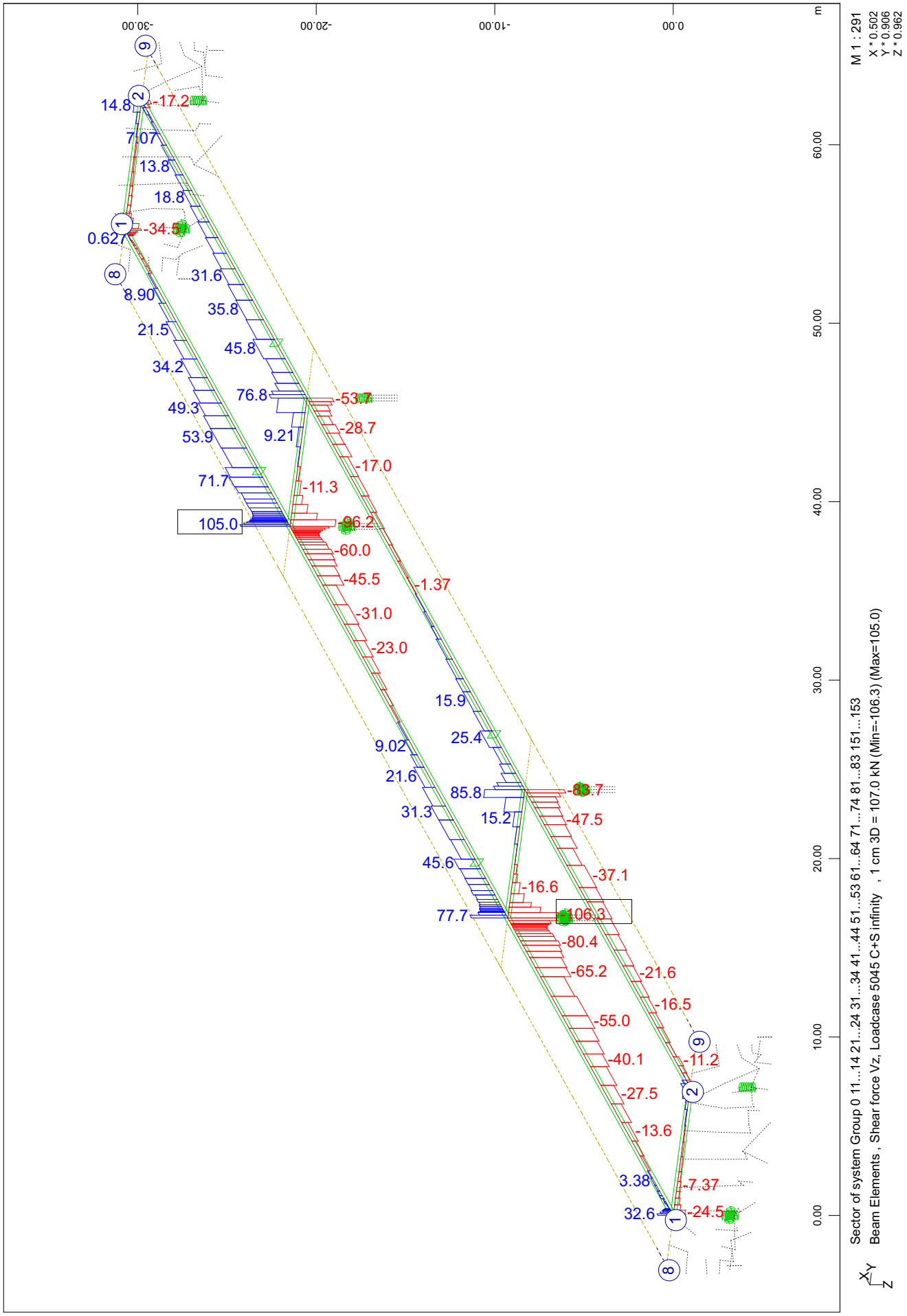

SOFiSTiK AG - www.sofistik.de

Composite bridge 38+50+38, b=14.25m, 2x2HL1100R HISTAR460 , slab 0.30m C30/37

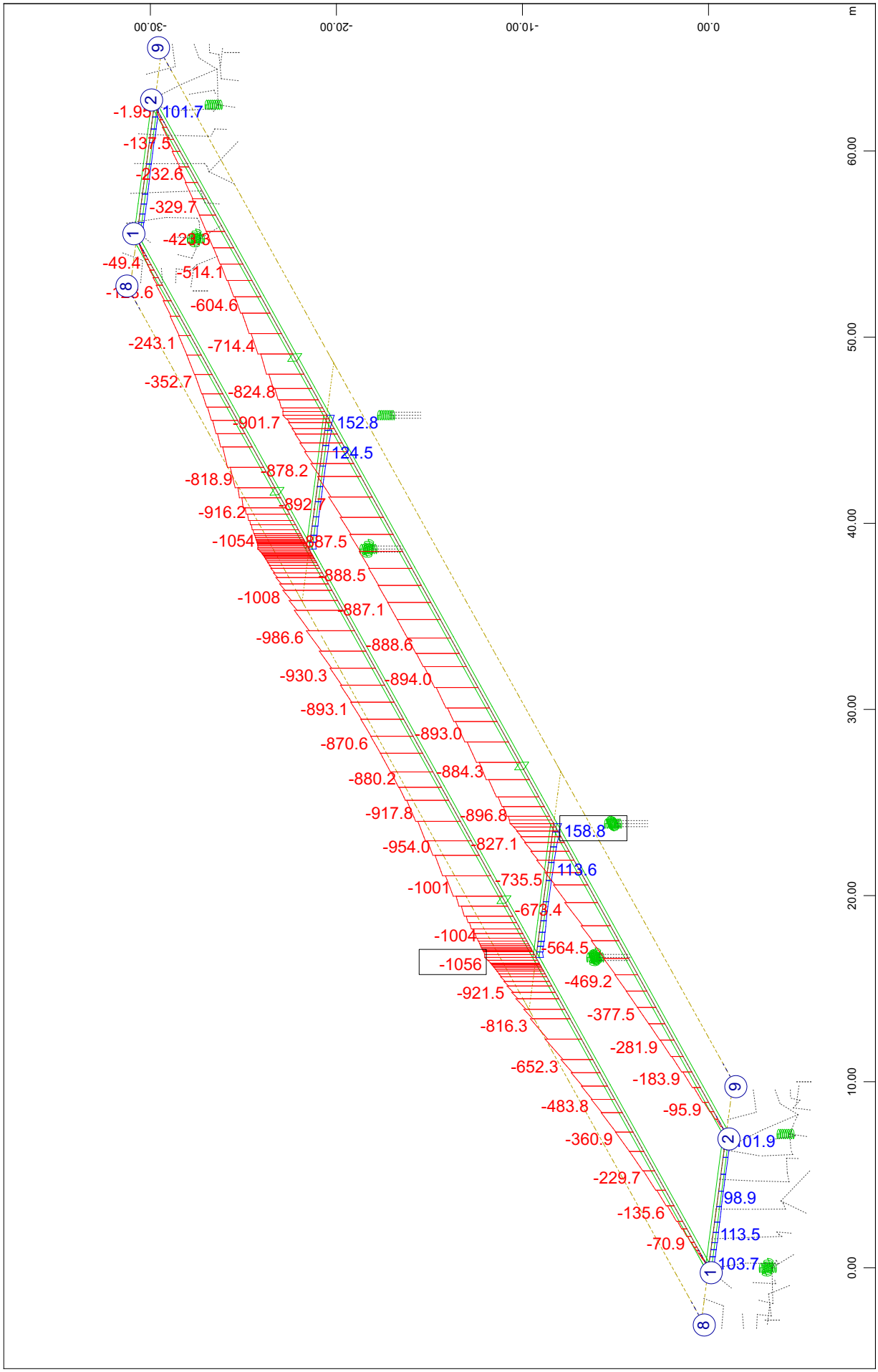

SOFiSTiK AG - www.sofistik.de

Composite bridge 38+50+38, b=14.25m, 2x2HL1100R HISTAR460 , slab 0.30m C30/37

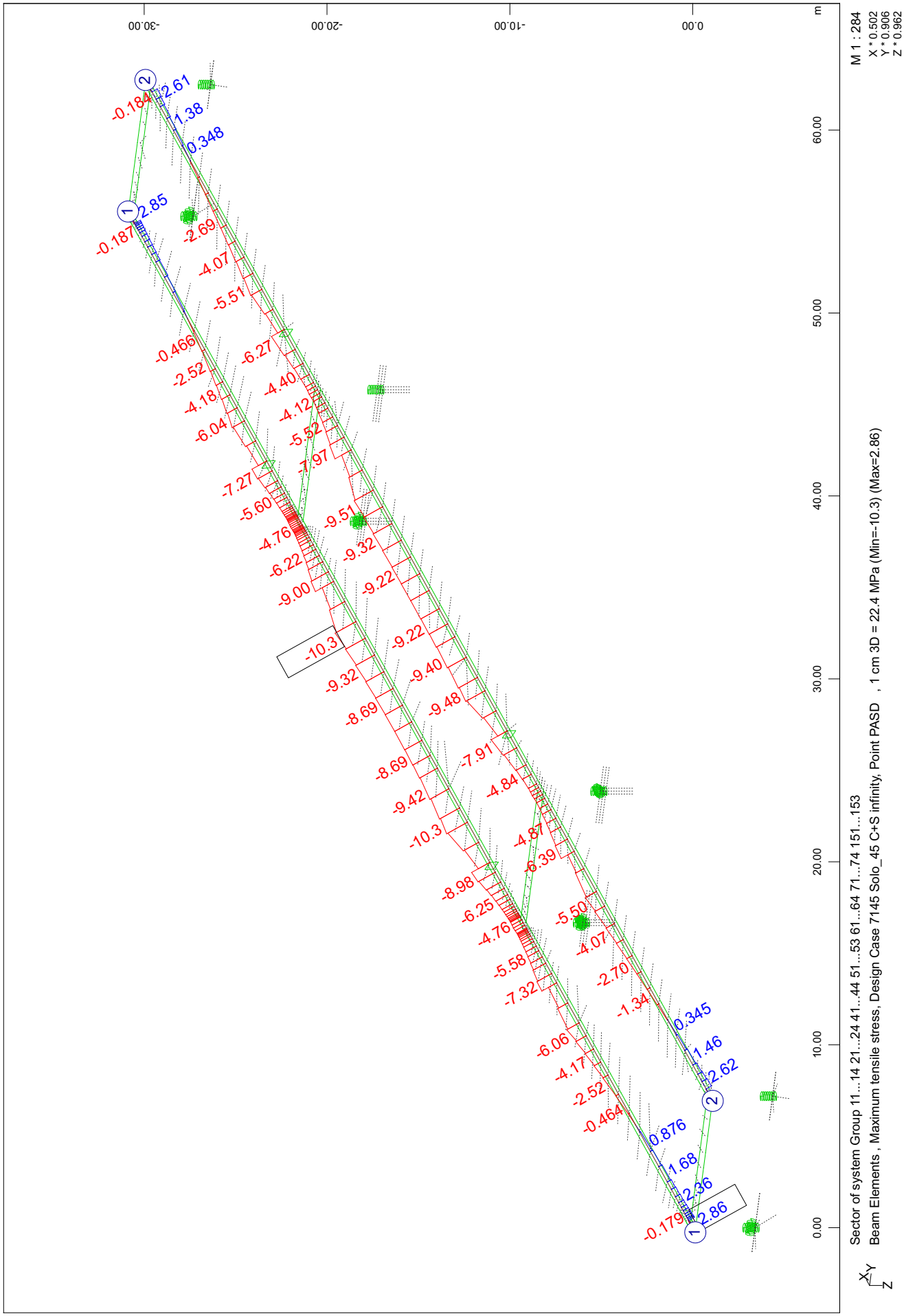

Composite bridge 38+50+38, b=14.25m, 2x2HL1100R HISTAR460 , slab 0.30m C30/37

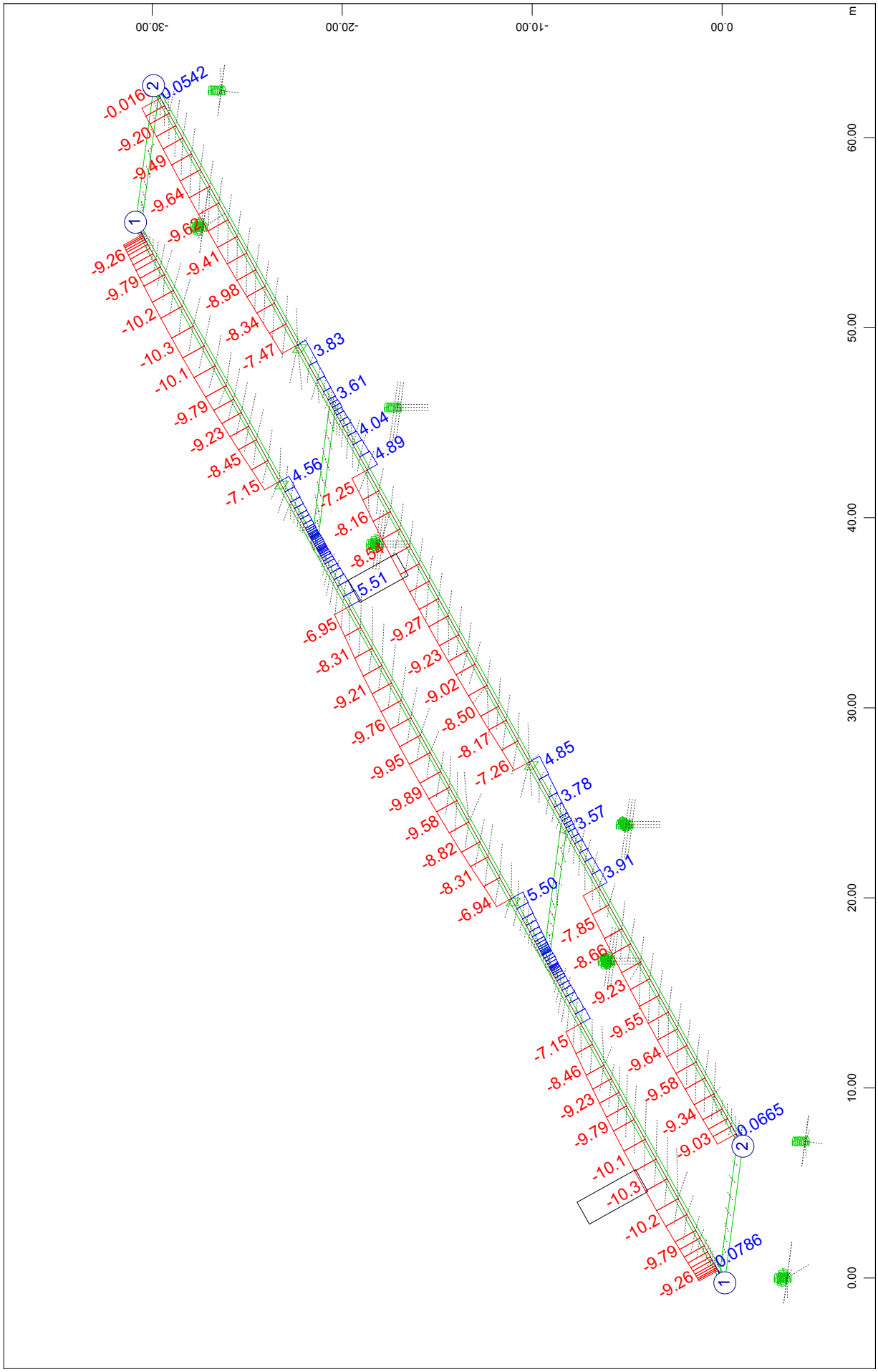

Composite bridge 38+50+38, b=14.25m, 2x2HL1100R HISTAR460 , slab 0.30m C30/37

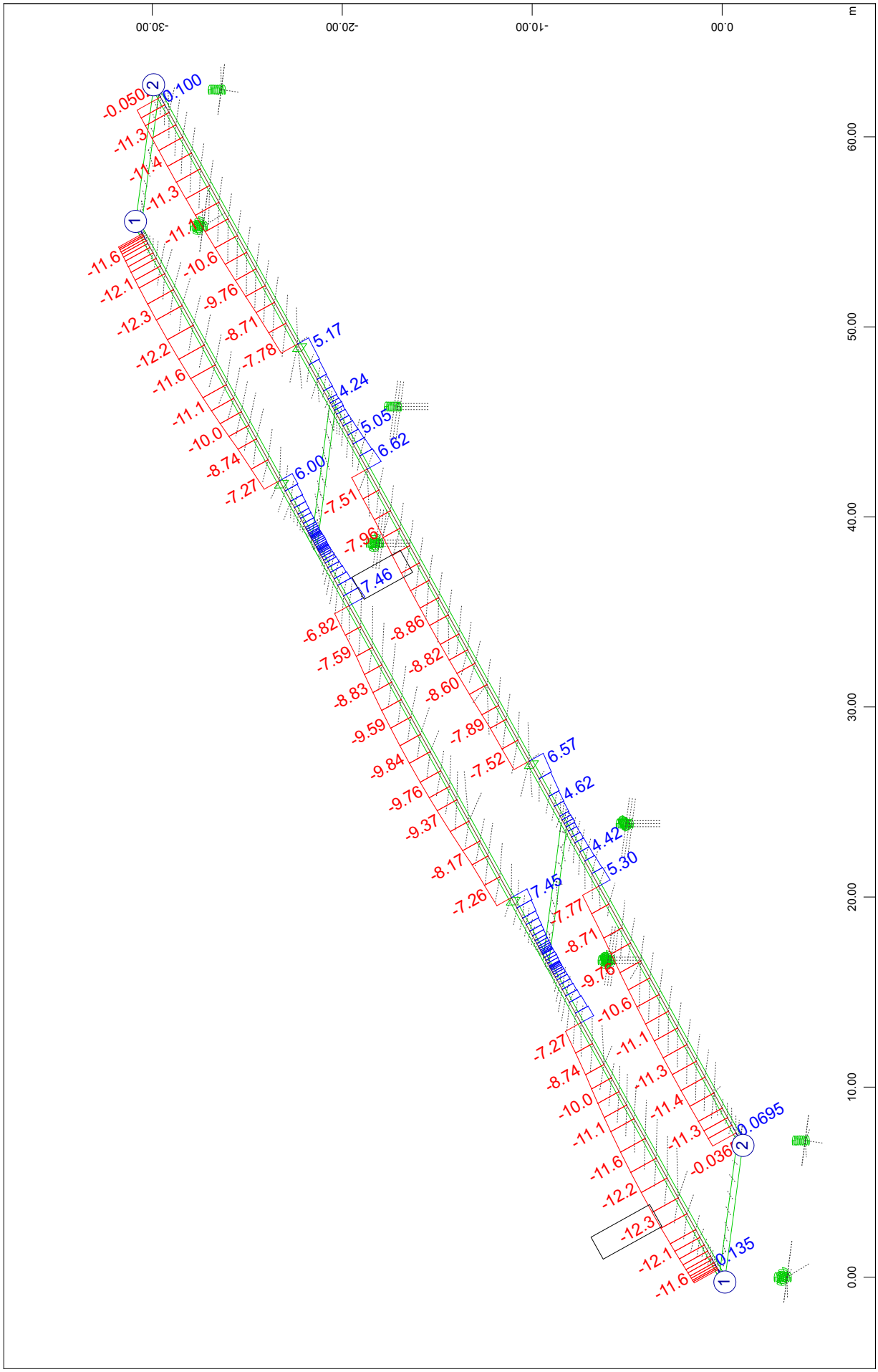

Composite bridge 38+50+38, b=14.25m, 2x2HL1100R HISTAR460 , slab 0.30m C30/37

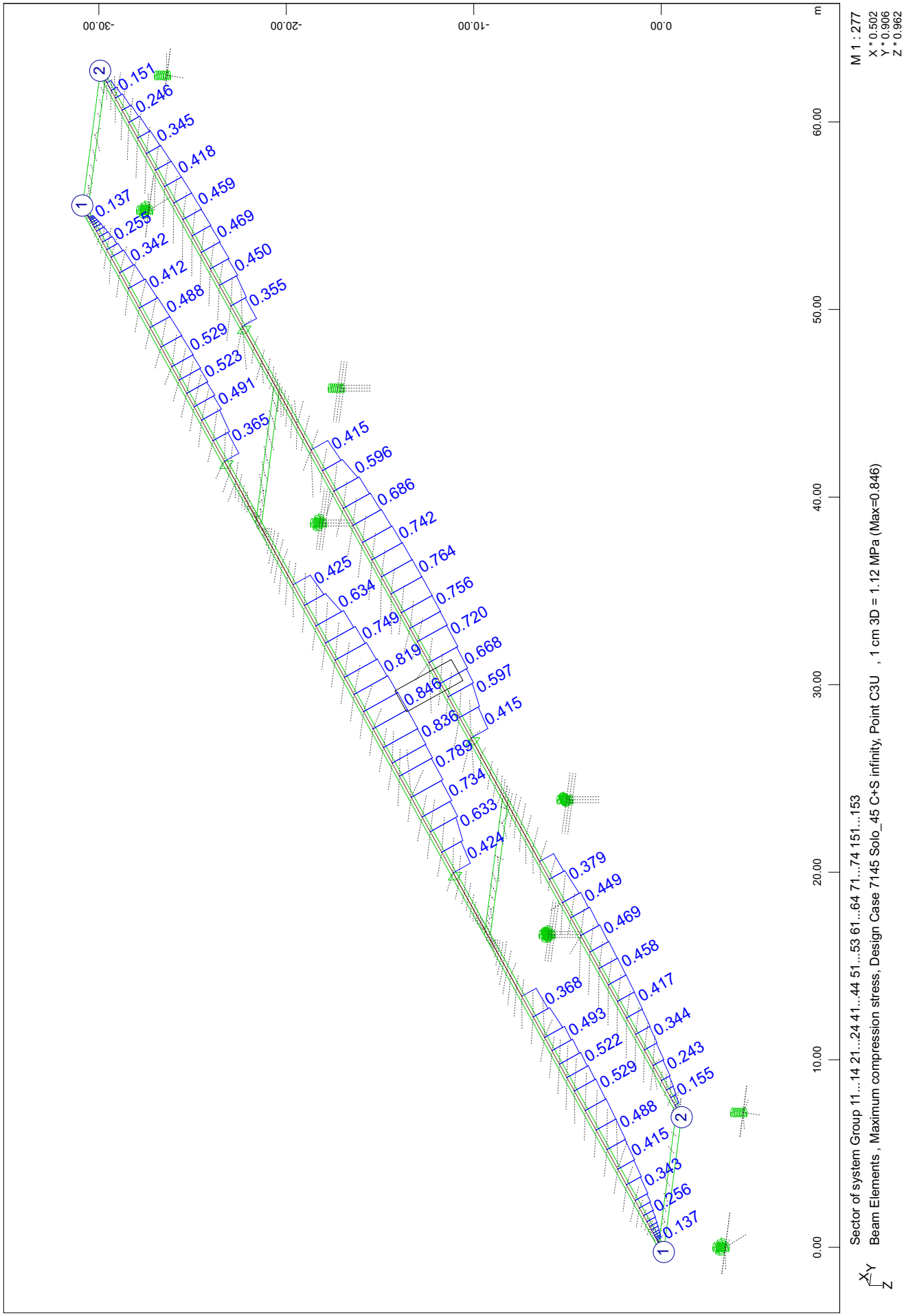

SOFiSTiK AG - www.sofistik.de

Composite bridge 38+50+38, b=14.25m, 2x2HL1100R HISTAR460 , slab 0.30m C30/37

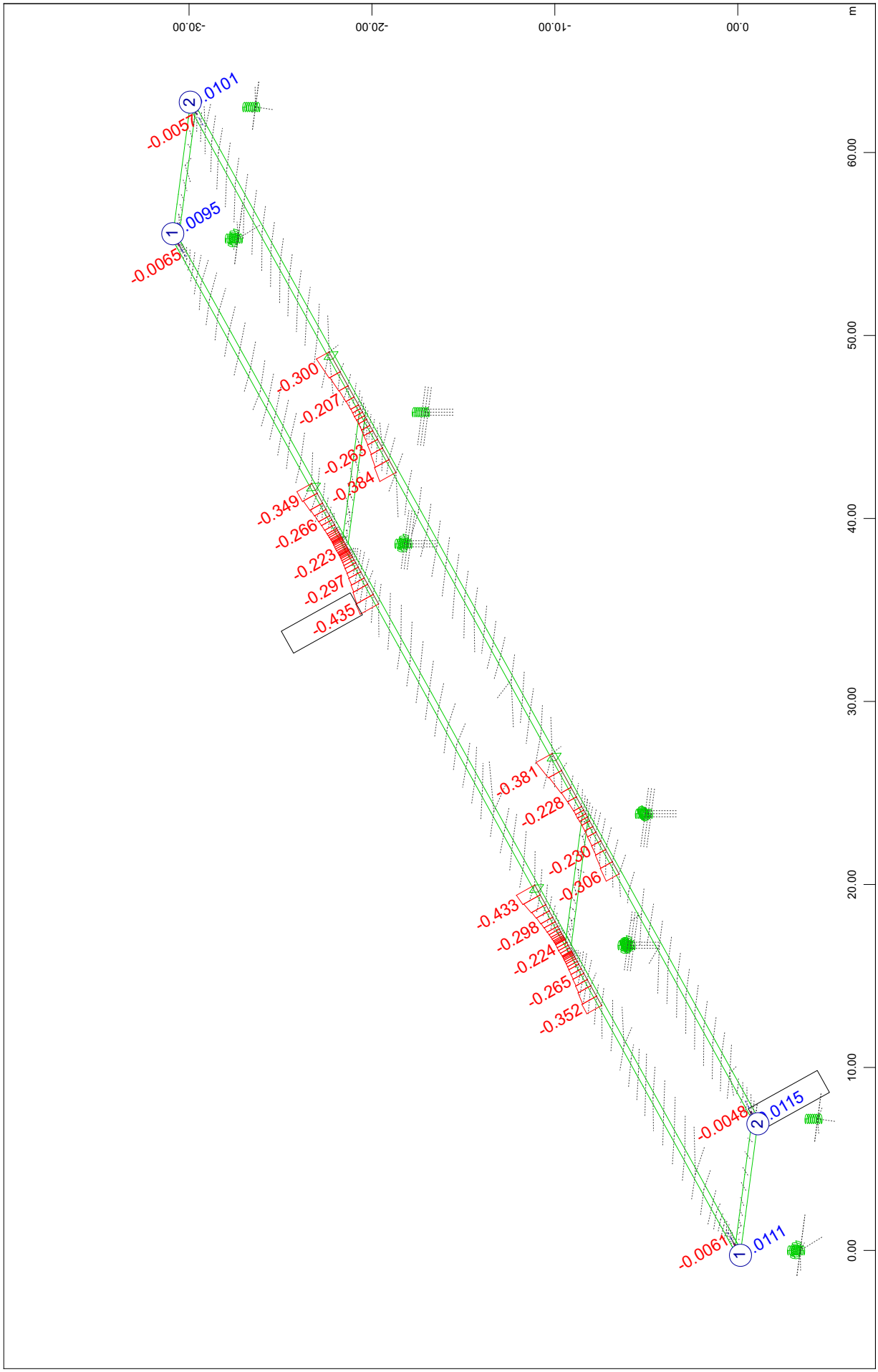

SOFiSTiK AG - www.sofistik.de

Composite bridge 38+50+38, b=14.25m, 2x2HL1100R HISTAR460 , slab 0.30m C30/37
Incremental results of CSM stages; CS46: C+S 36500days part 2 from 5

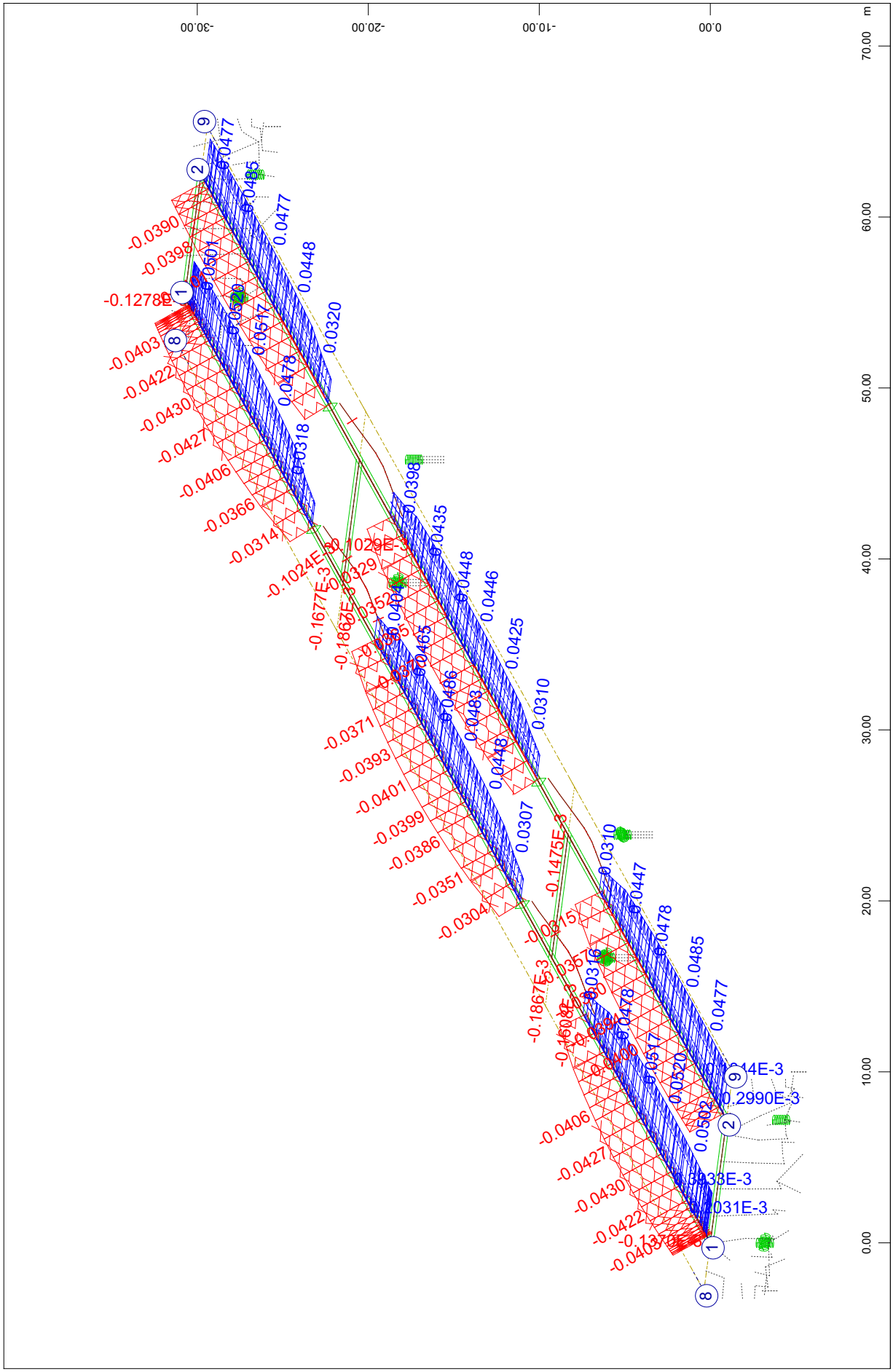

SOFiSTiK AG - www.sofistik.de

Composite bridge 38+50+38, b=14.25m, 2x2HL1100R HISTAR460 , slab 0.30m C30/37

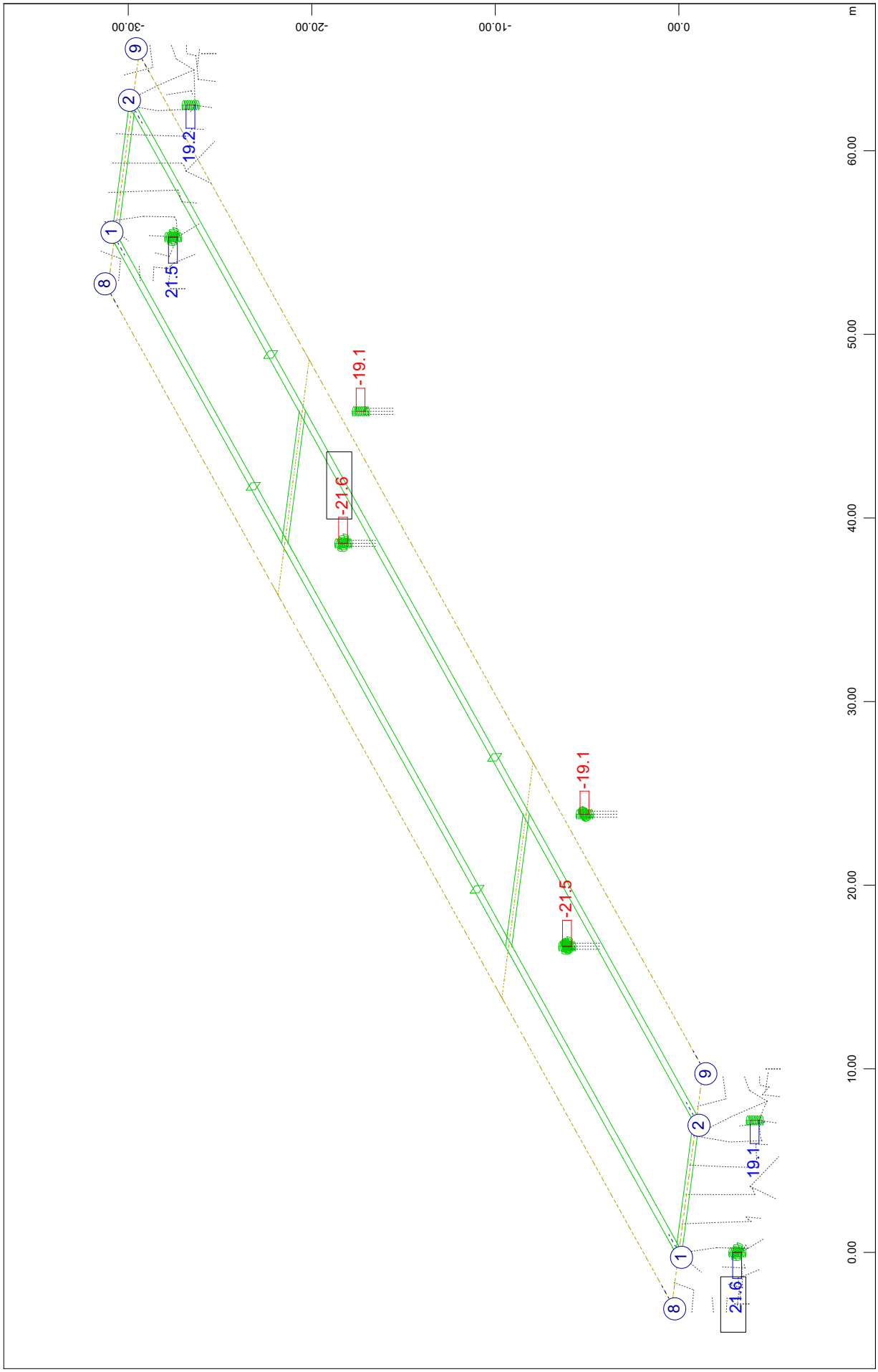

SOFiSTiK AG - www.sofistik.de

Composite bridge 38+50+38, b=14.25m, 2x2HL1100R HISTAR460 , slab 0.30m C30/37

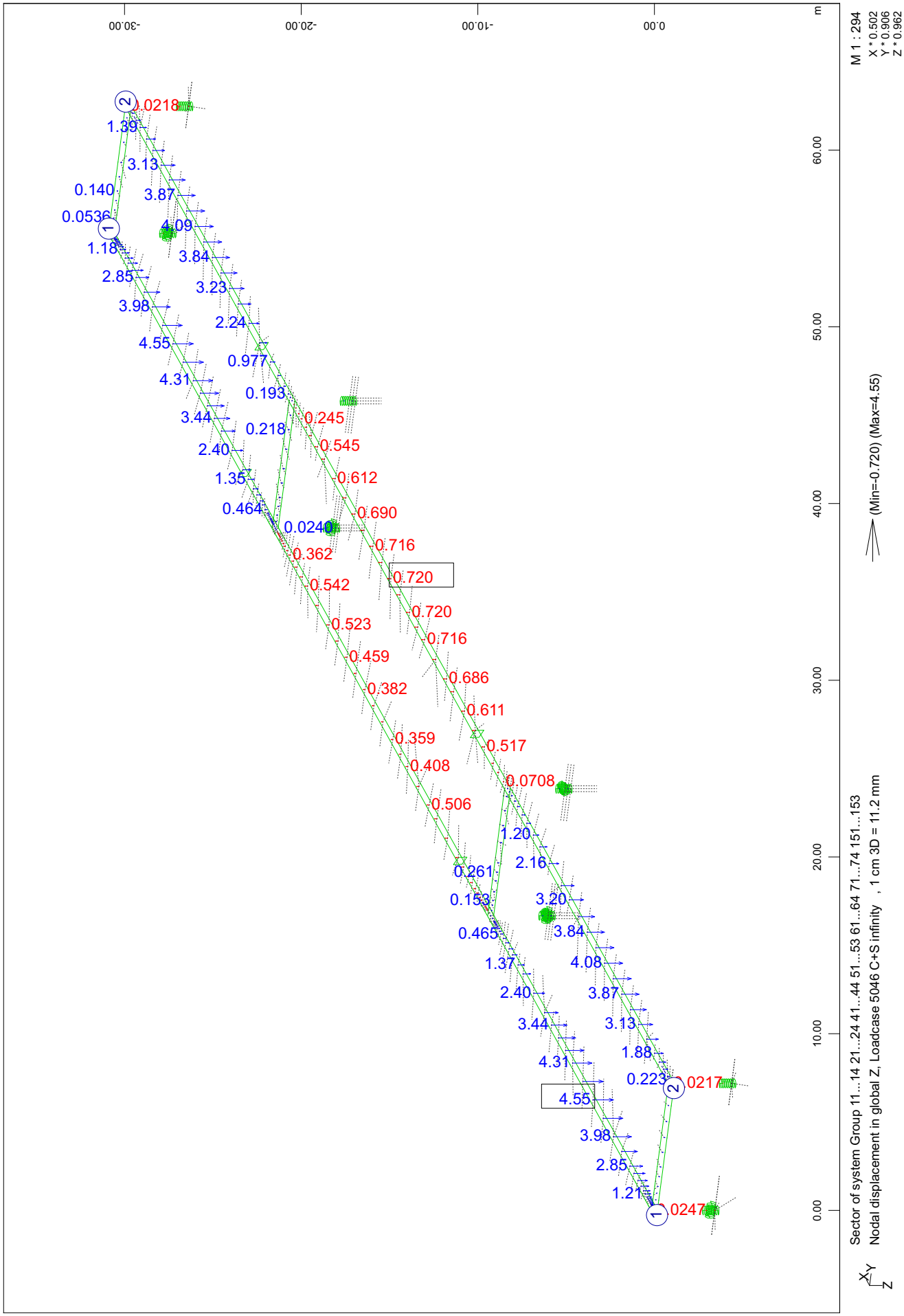

Composite bridge 38+50+38, b=14.25m, 2x2HL1100R HISTAR460 , slab 0.30m C30/37

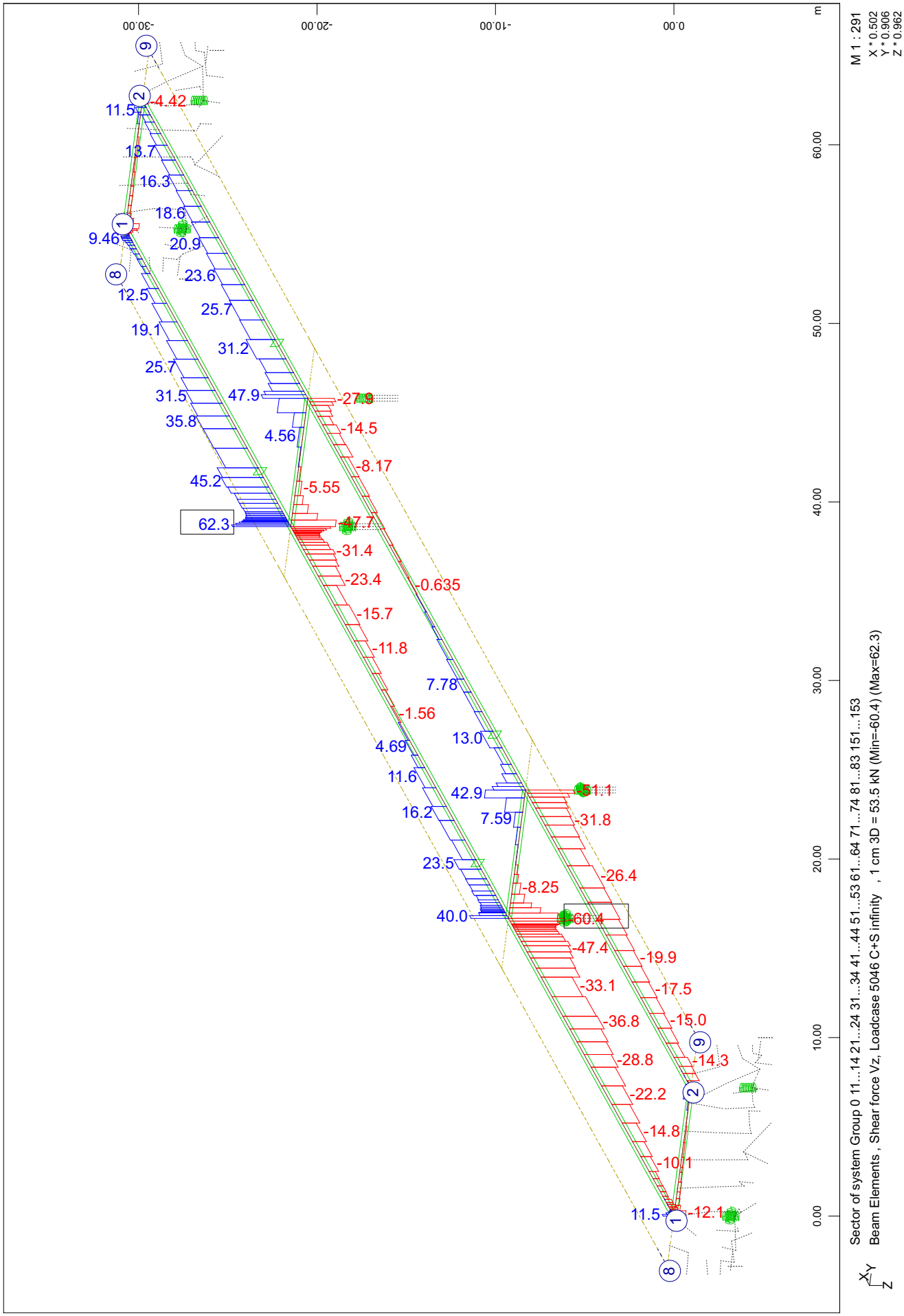

SOFiSTiK AG - www.sofistik.de

Composite bridge 38+50+38, b=14.25m, 2x2HL1100R HISTAR460 , slab 0.30m C30/37

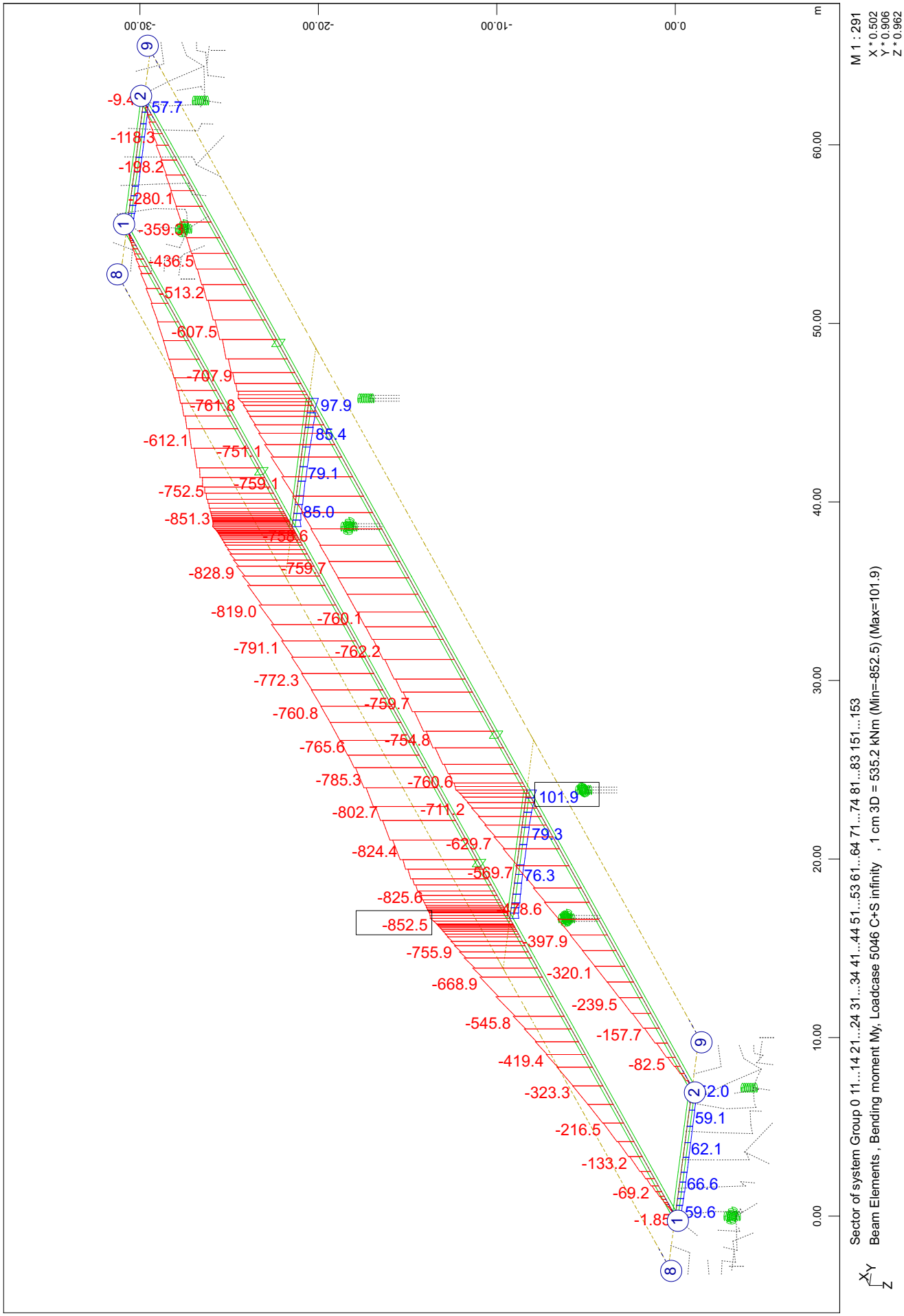

Composite bridge 38+50+38, b=14.25m, 2x2HL1100R HISTAR460 , slab 0.30m C30/37

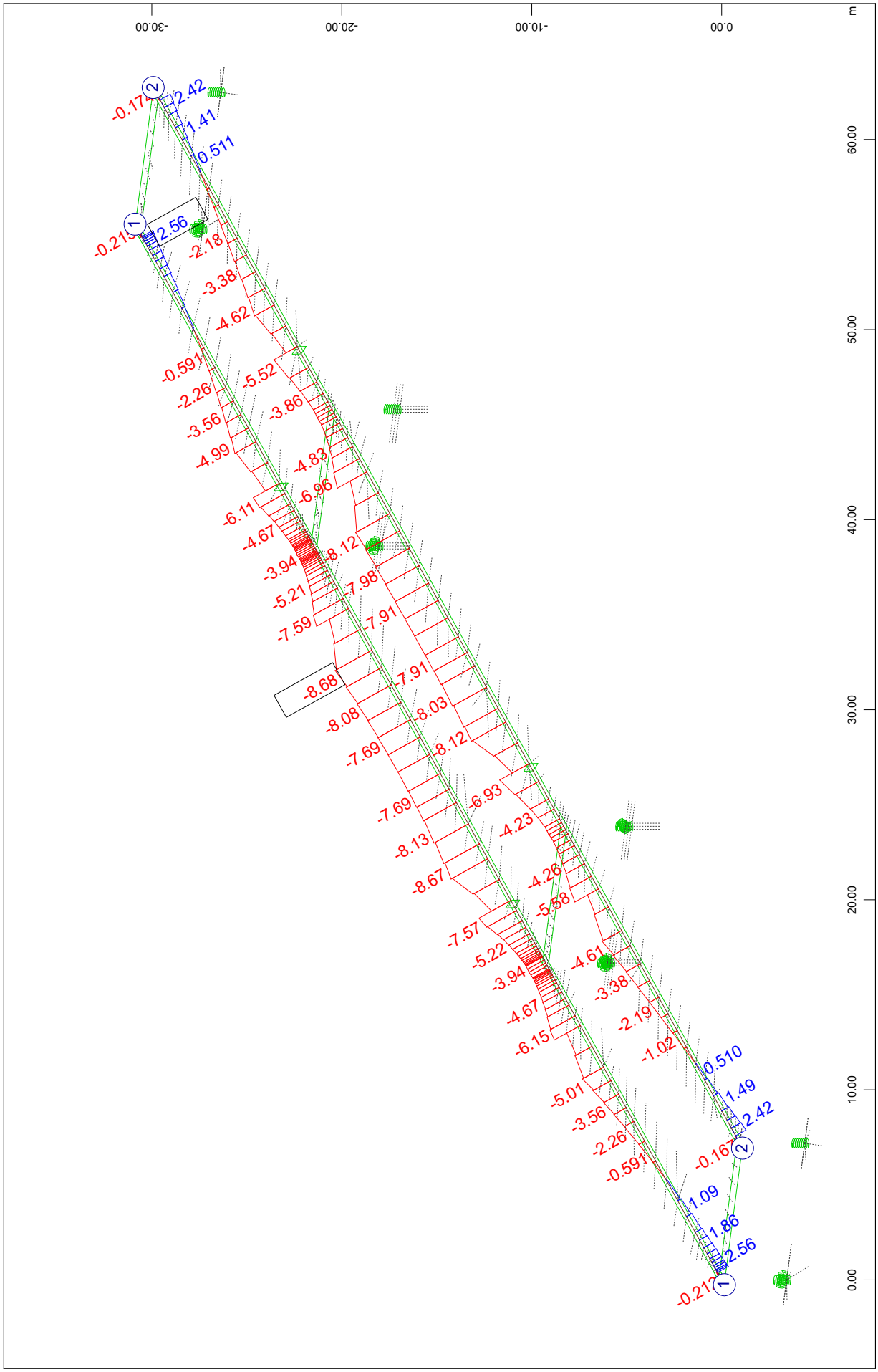

SOFiSTiK AG - www.sofistik.de

Composite bridge 38+50+38, b=14.25m, 2x2HL1100R HISTAR460 , slab 0.30m C30/37

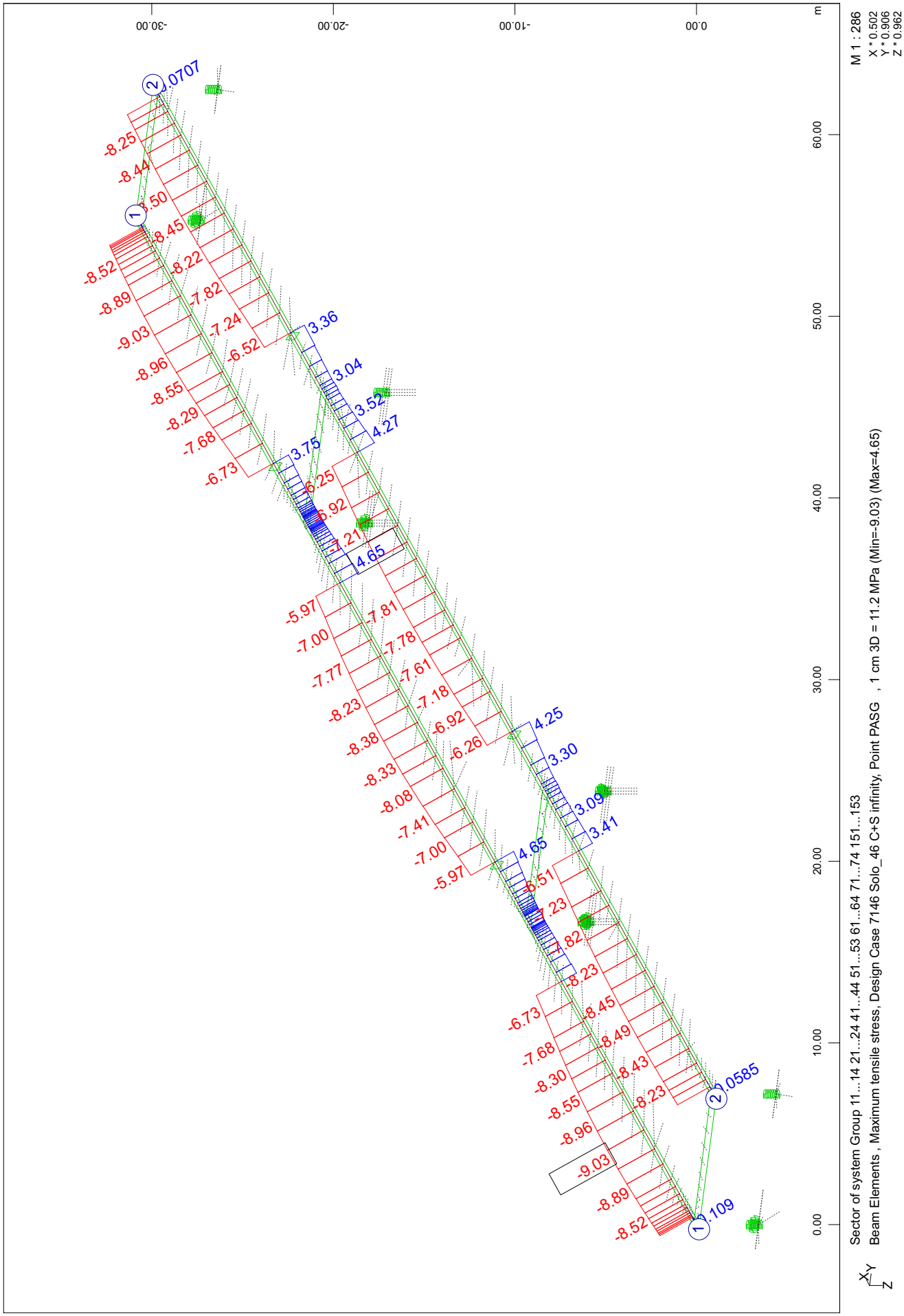

Composite bridge 38+50+38, b=14.25m, 2x2HL1100R HISTAR460 , slab 0.30m C30/37

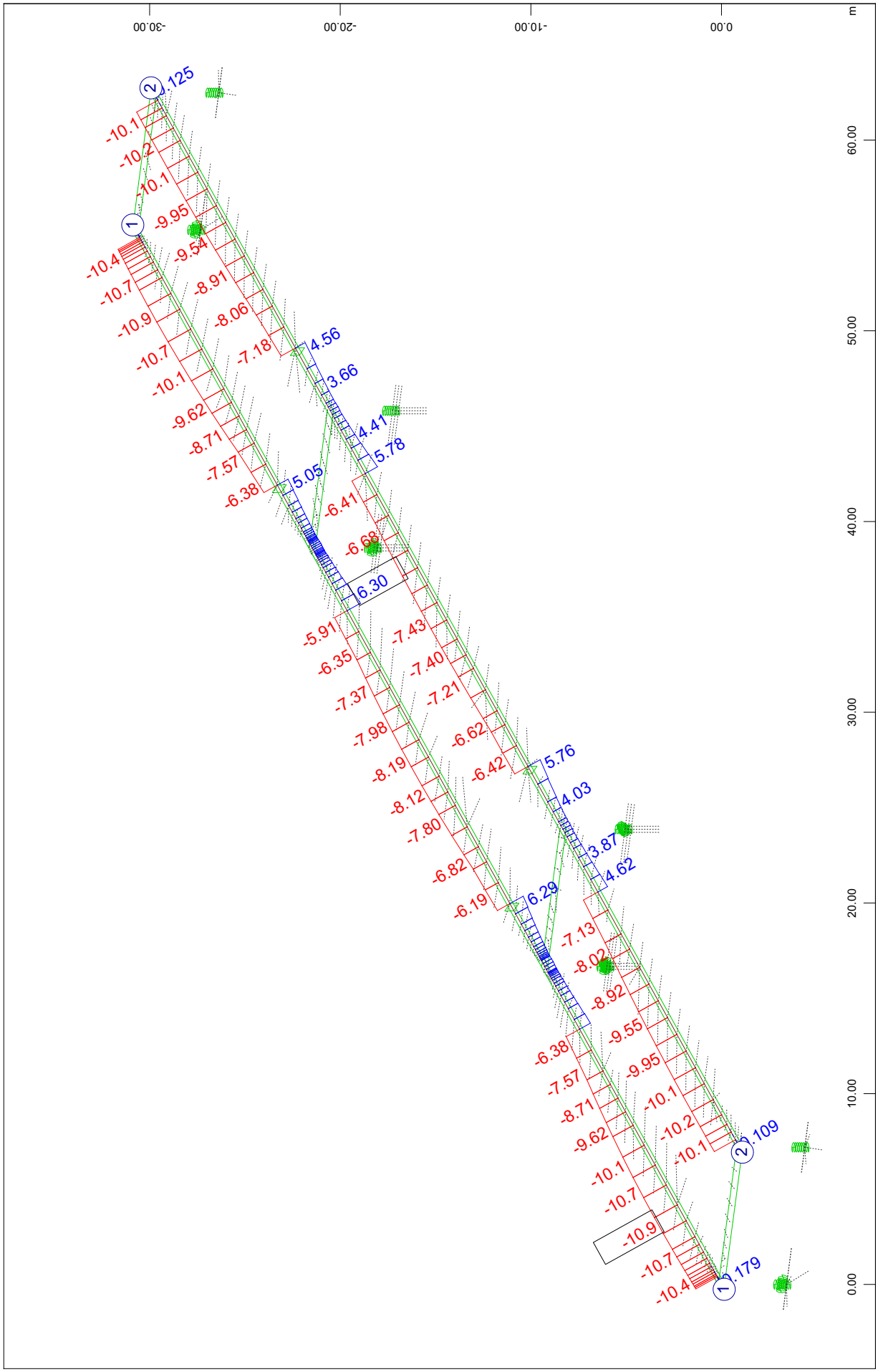

Composite bridge 38+50+38, b=14.25m, 2x2HL1100R HISTAR460 , slab 0.30m C30/37

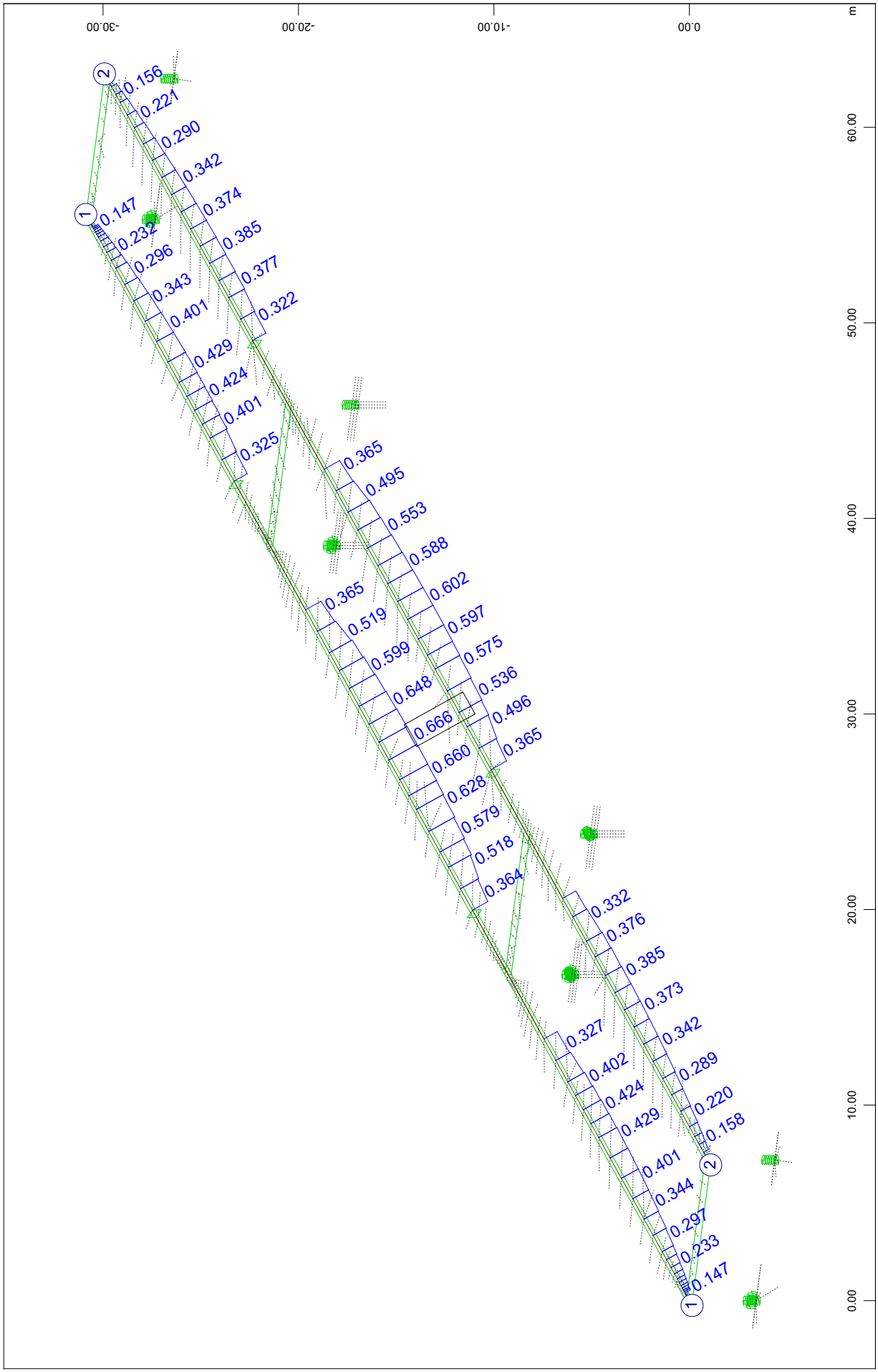

SOFiSTiK AG - www.sofistik.de

Composite bridge 38+50+38, b=14.25m, 2x2HL1100R HISTAR460 , slab 0.30m C30/37

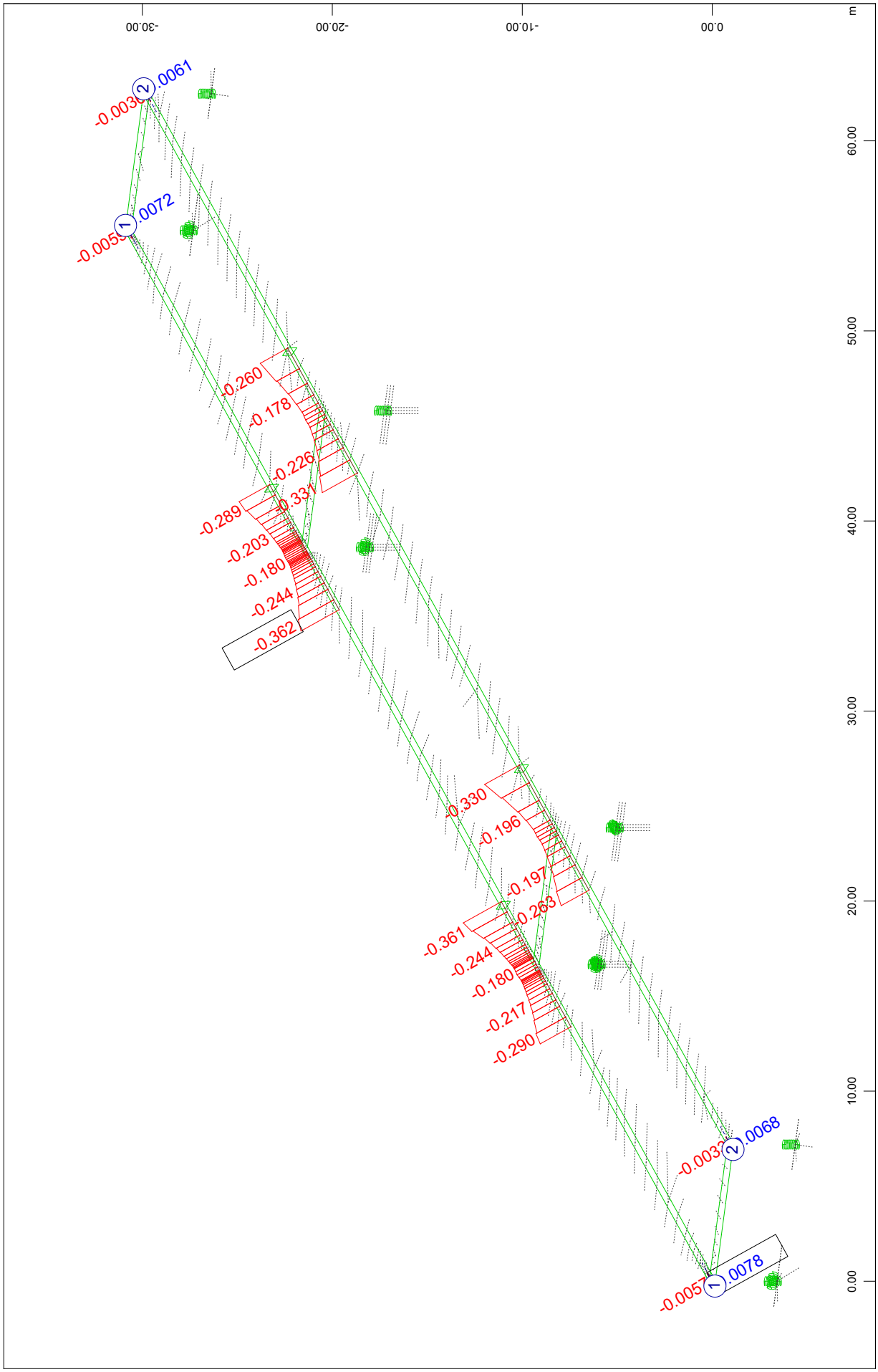

SOFiSTiK AG - www.sofistik.de

Composite bridge 38+50+38, b=14.25m, 2x2HL1100R HISTAR460 , slab 0.30m C30/37
Incremental results of CSM stages; CS47: C+S 36500days part 3 from 5

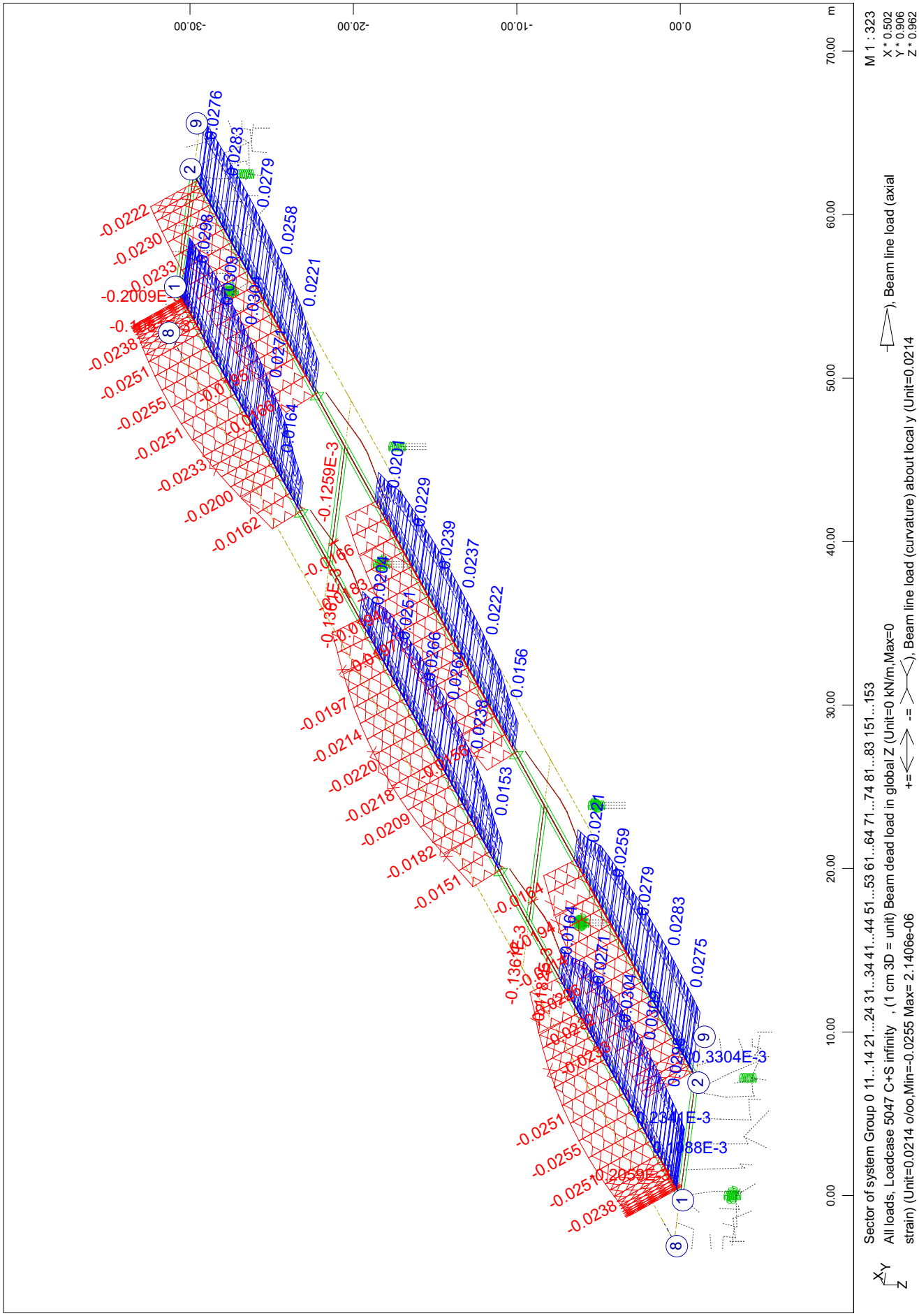

SOFiSTiK AG - www.sofistik.de

Composite bridge 38+50+38, b=14.25m, 2x2HL1100R HISTAR460 , slab 0.30m C30/37

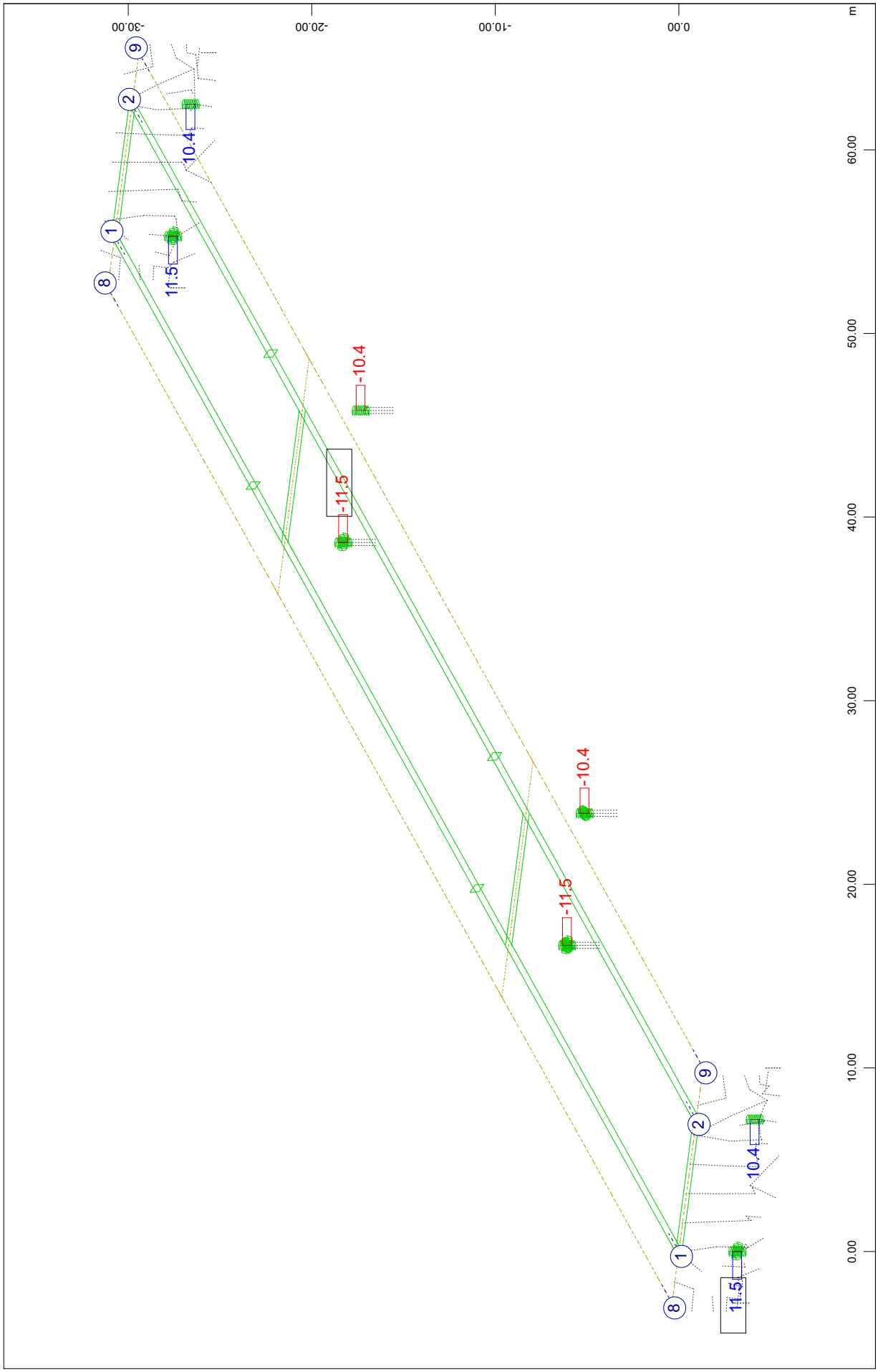

SOFiSTiK AG - www.sofistik.de

Composite bridge 38+50+38, b=14.25m, 2x2HL1100R HISTAR460 , slab 0.30m C30/37

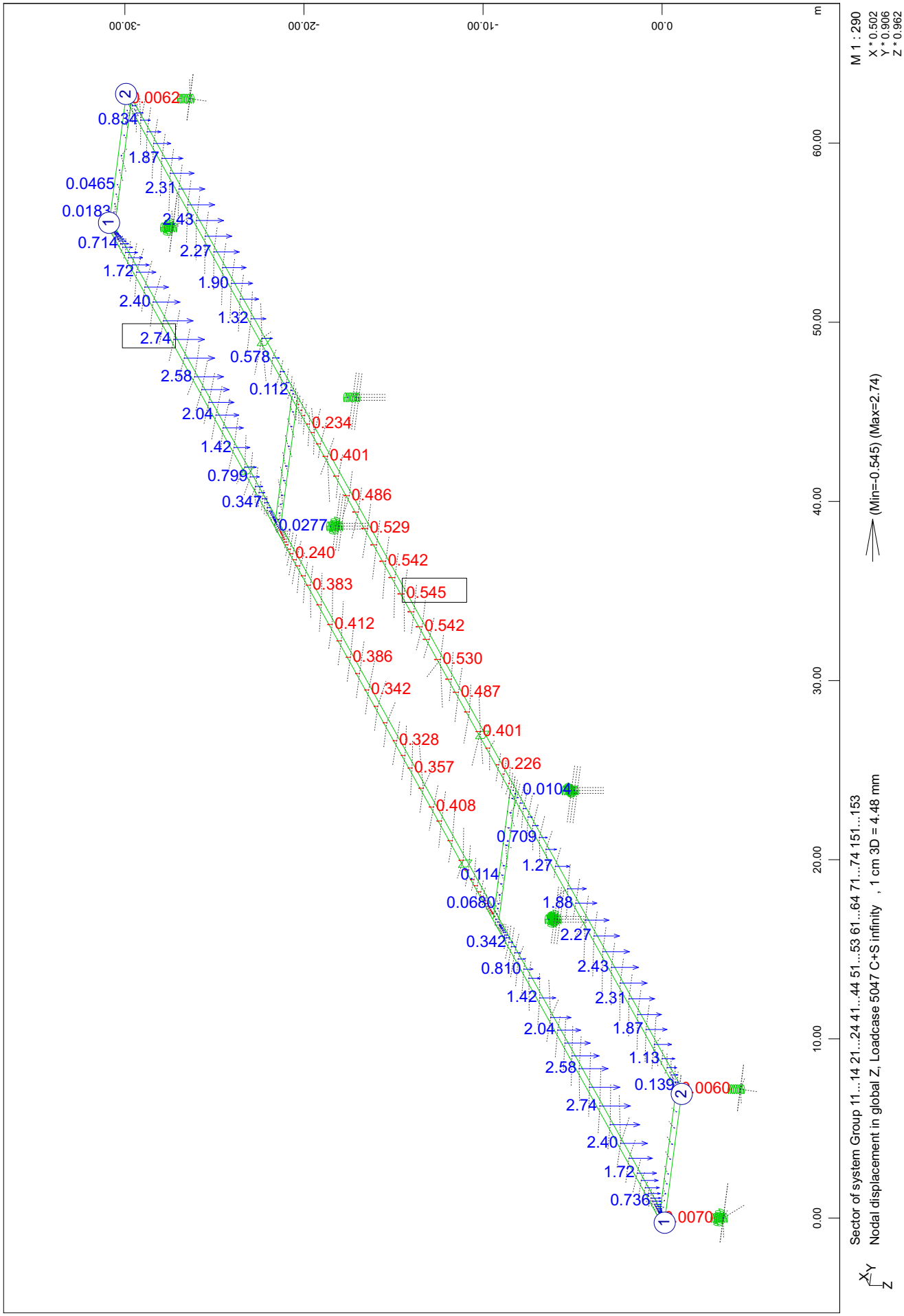

Composite bridge 38+50+38, b=14.25m, 2x2HL1100R HISTAR460 , slab 0.30m C30/37

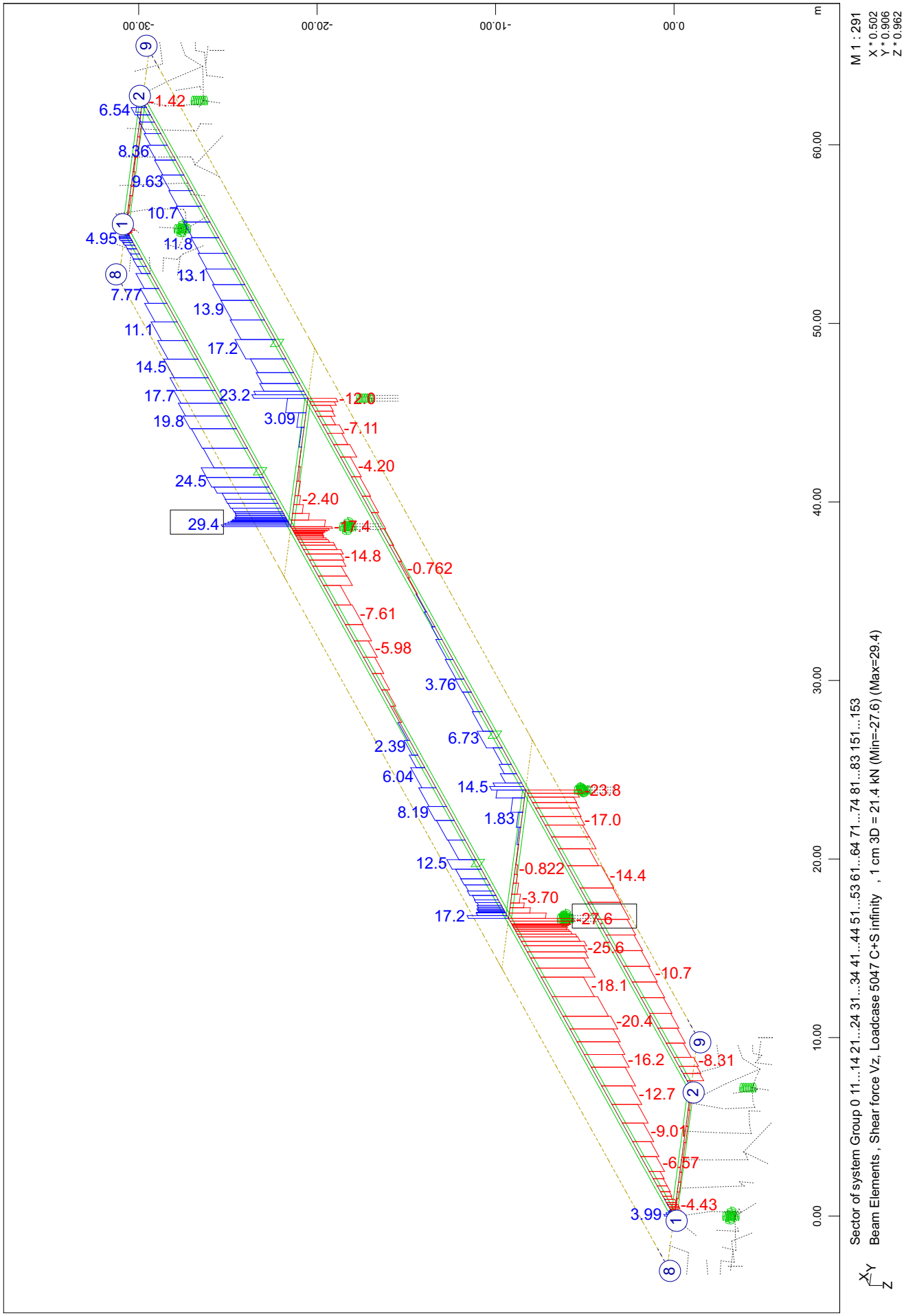

Composite bridge 38+50+38, b=14.25m, 2x2HL1100R HISTAR460 , slab 0.30m C30/37

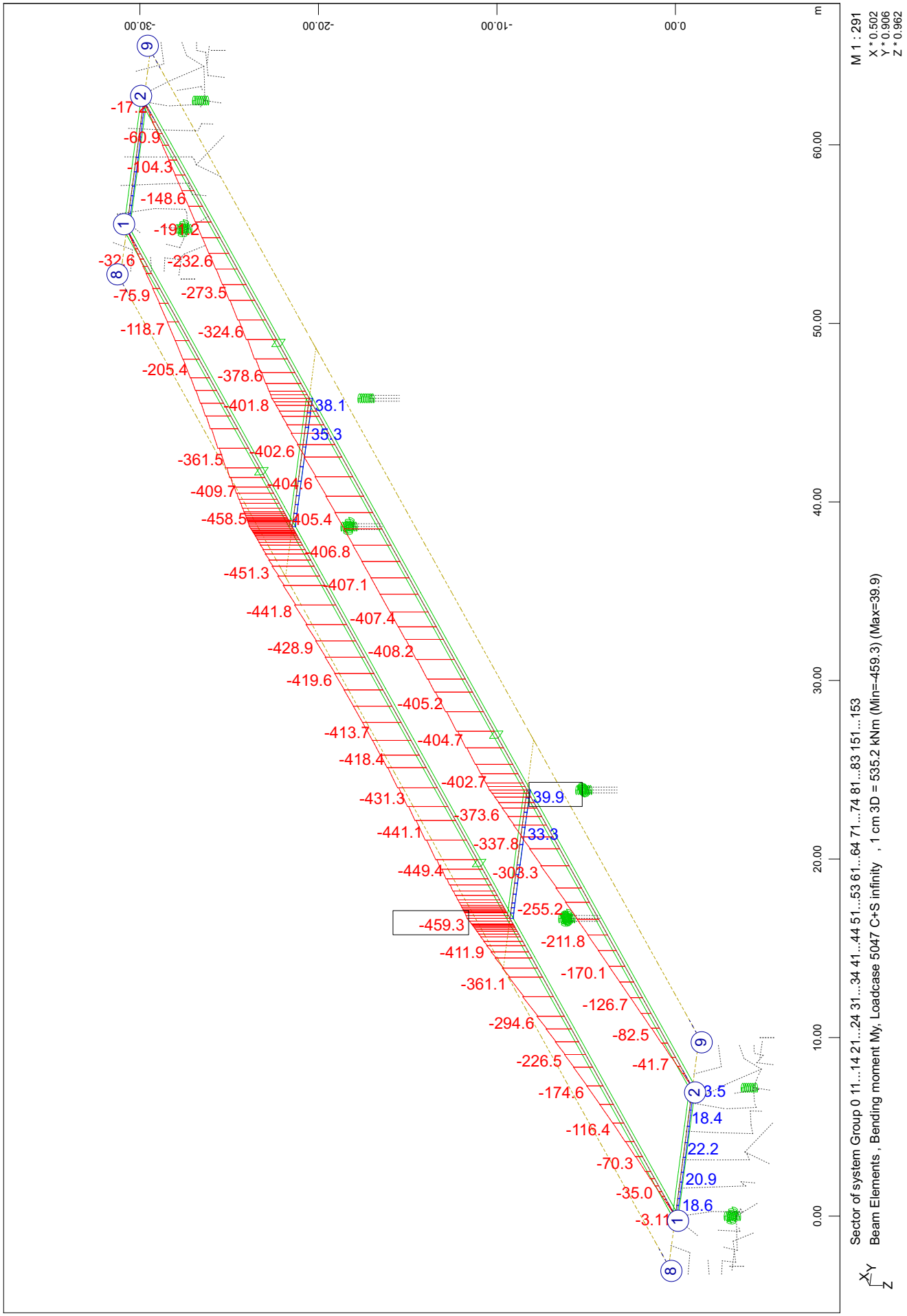

Composite bridge 38+50+38, b=14.25m, 2x2HL1100R HISTAR460 , slab 0.30m C30/37

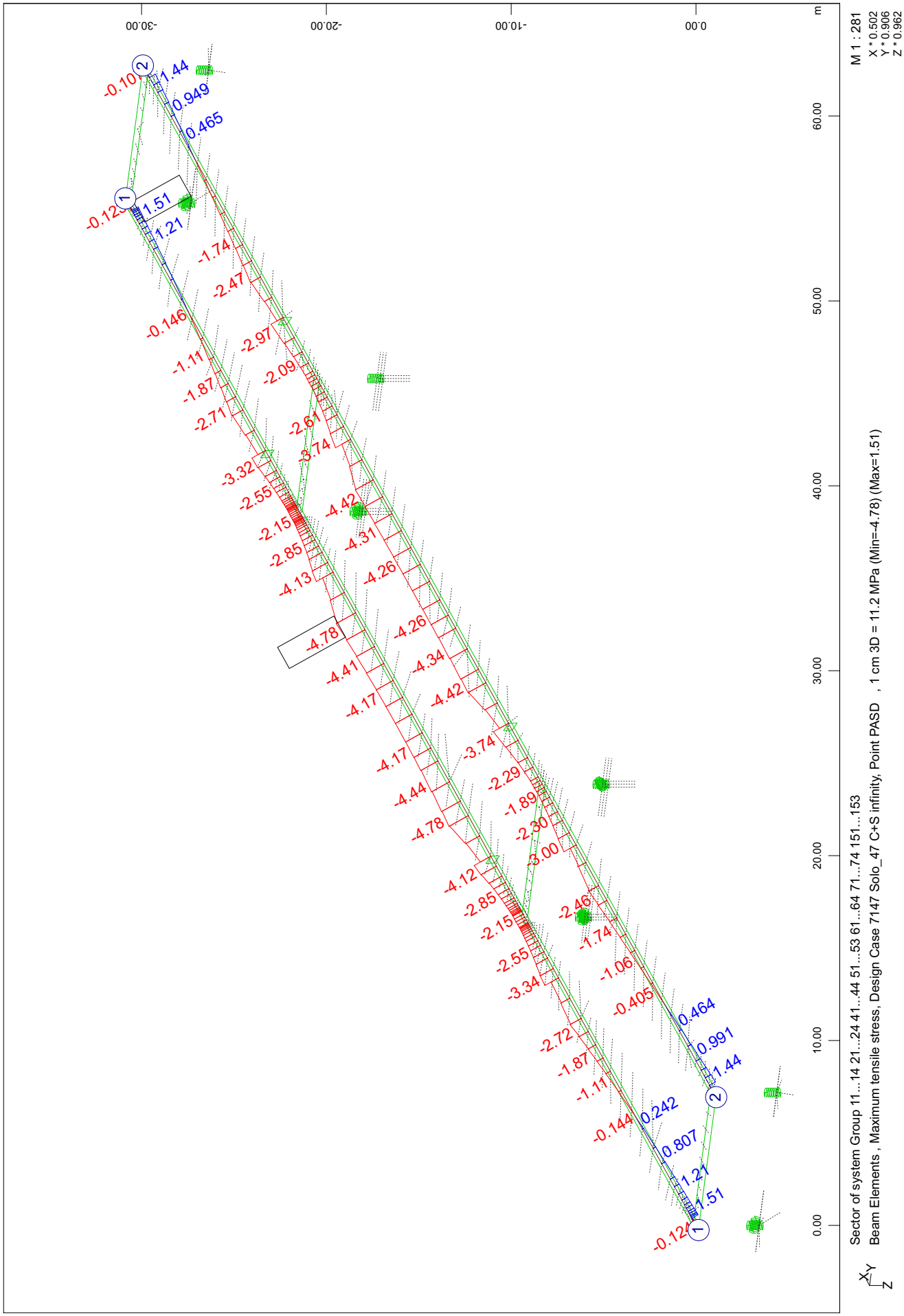

Composite bridge 38+50+38, b=14.25m, 2x2HL1100R HISTAR460 , slab 0.30m C30/37

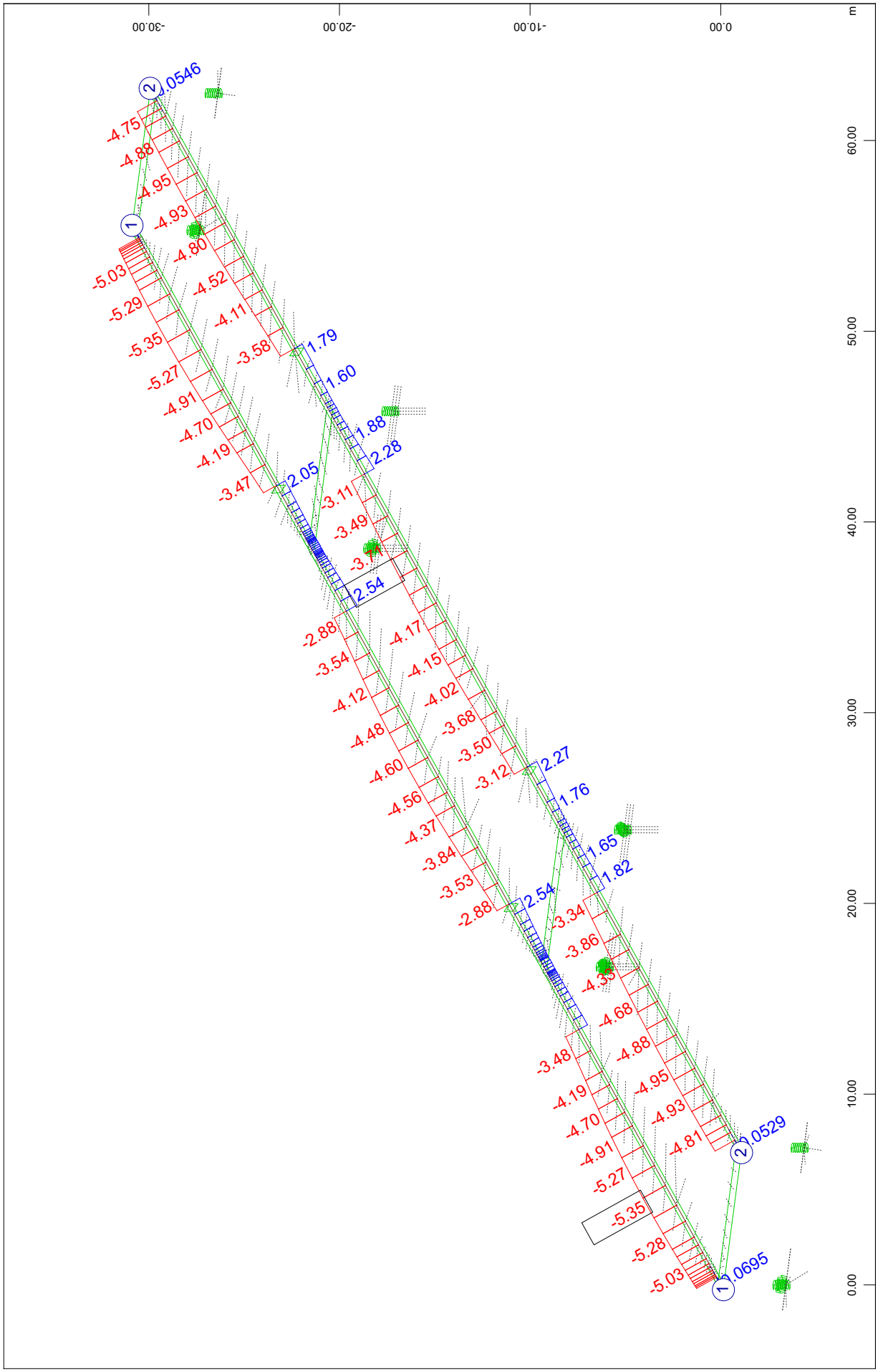

SOFiSTiK AG - www.sofistik.de

Composite bridge 38+50+38, b=14.25m, 2x2HL1100R HISTAR460 , slab 0.30m C30/37

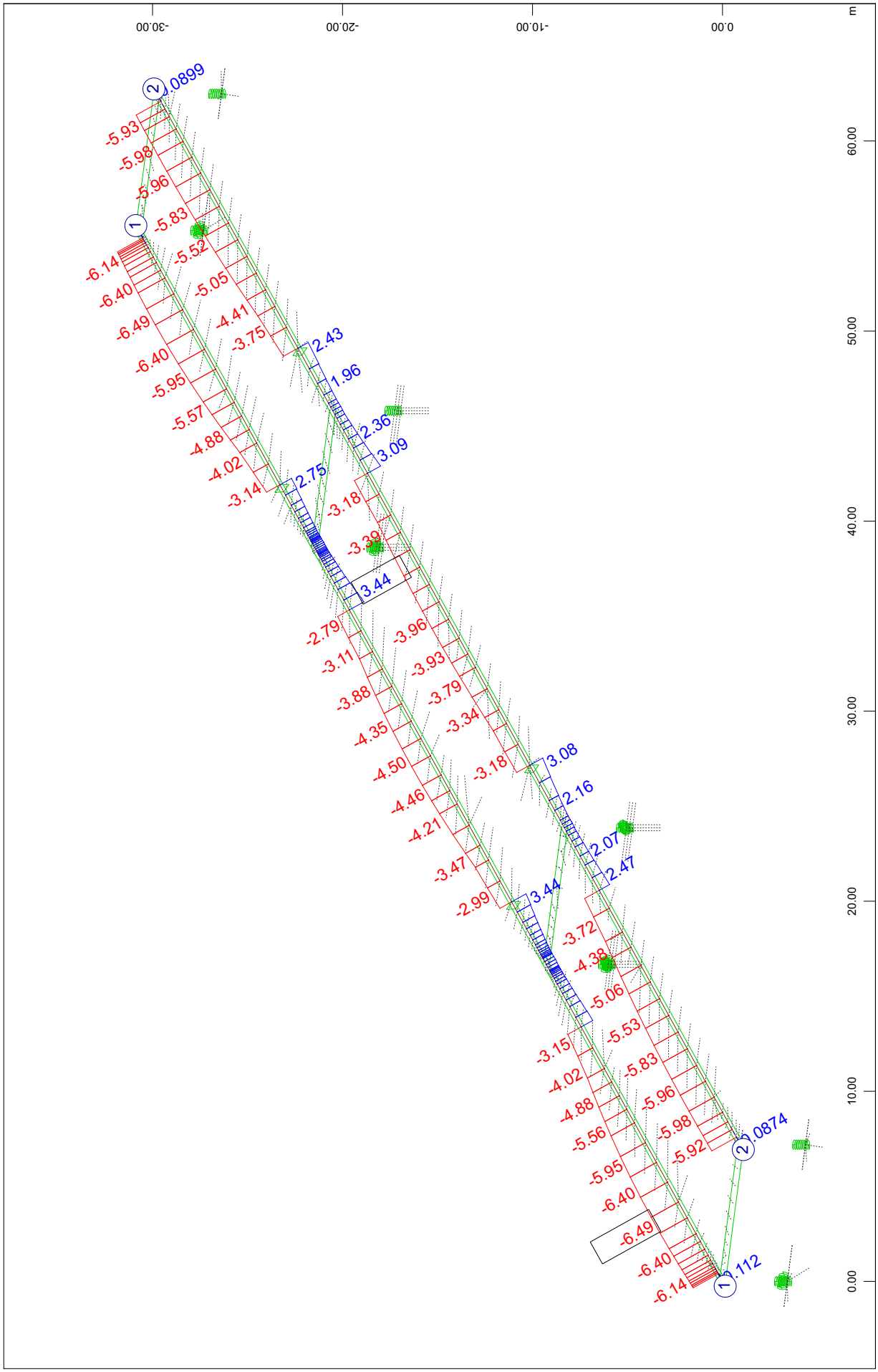

Composite bridge 38+50+38, b=14.25m, 2x2HL1100R HISTAR460 , slab 0.30m C30/37

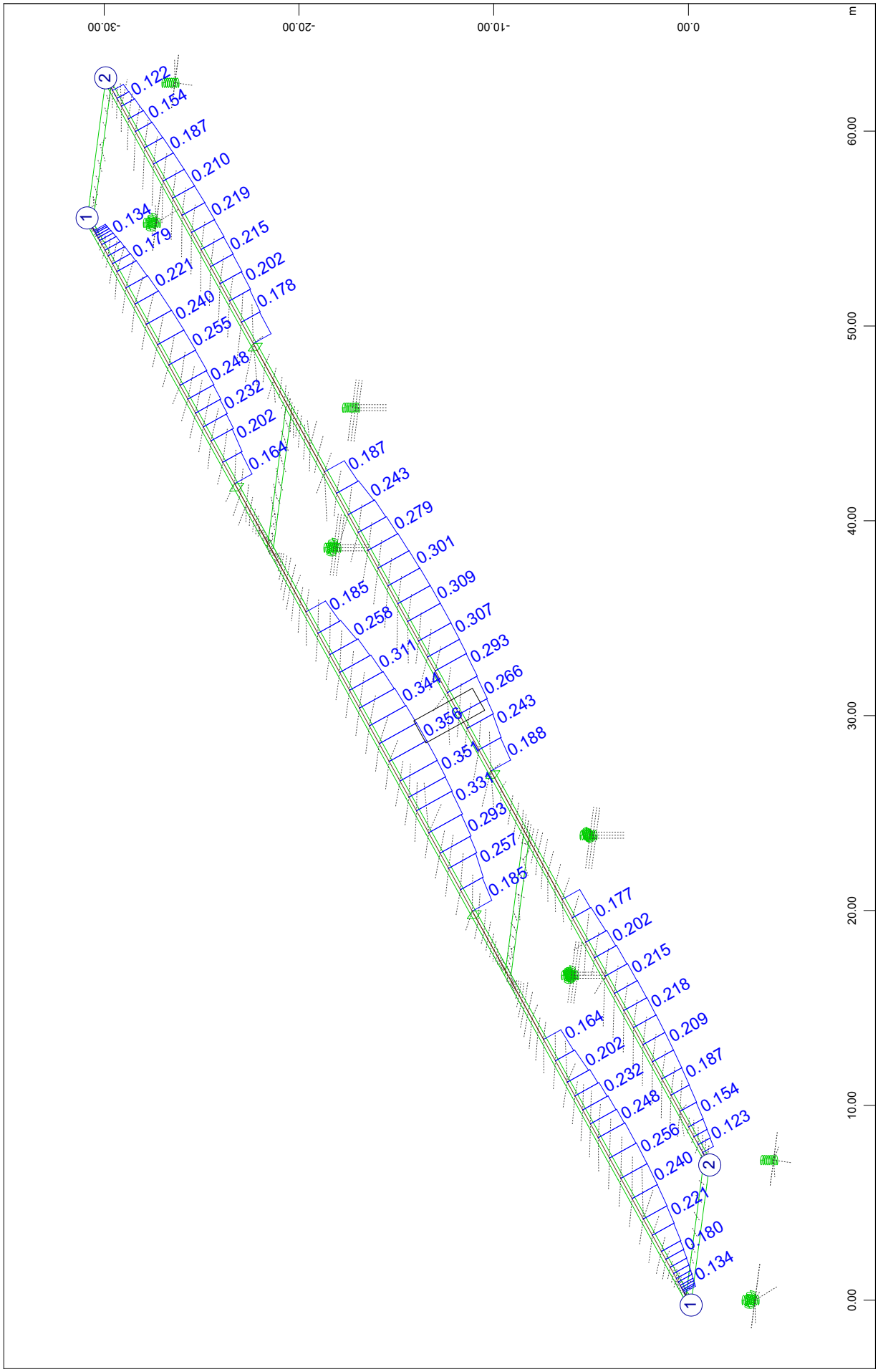

SOFiSTiK AG - www.sofistik.de

Composite bridge 38+50+38, b=14.25m, 2x2HL1100R HISTAR460 , slab 0.30m C30/37

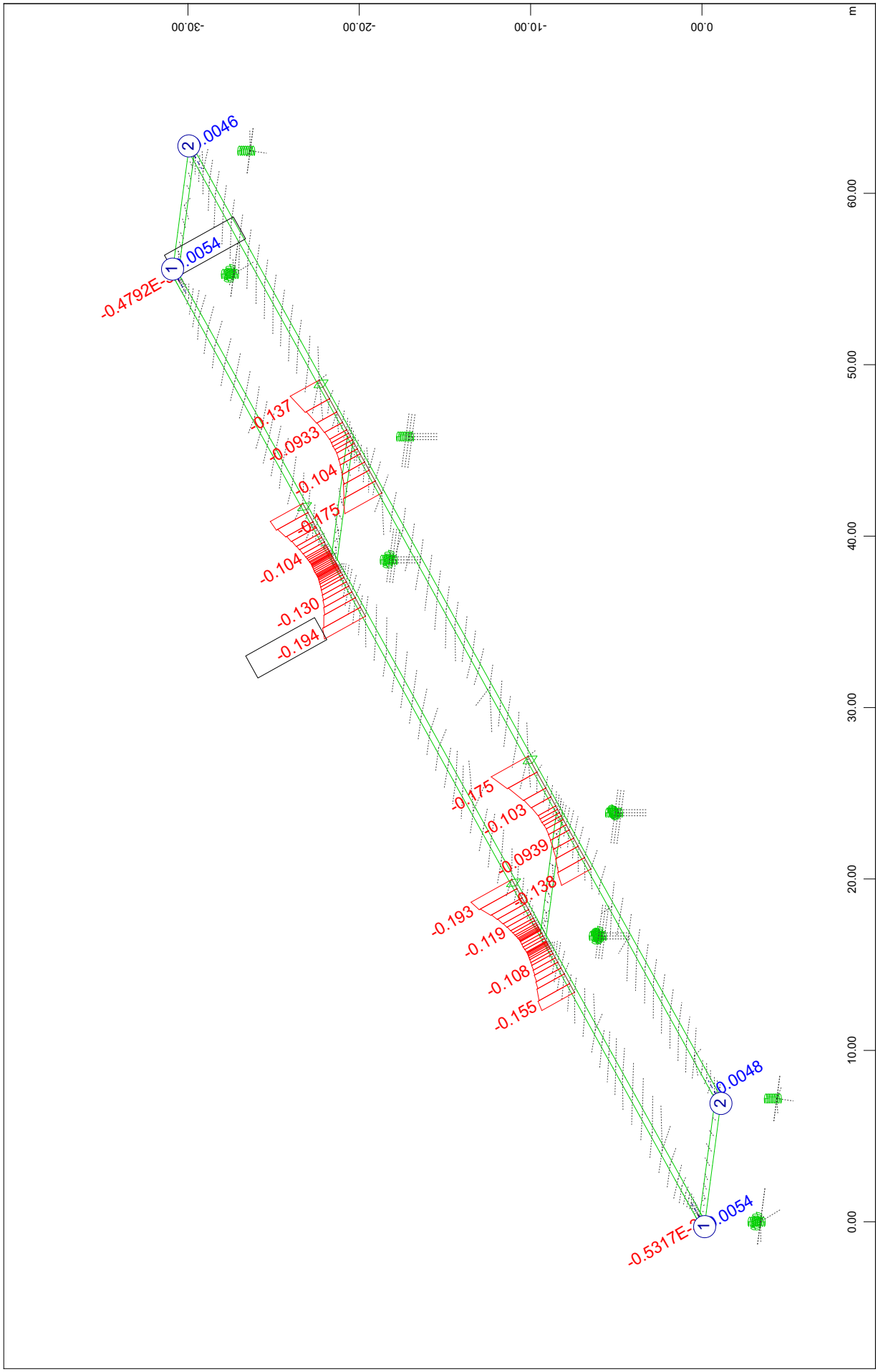

SOFiSTiK AG - www.sofistik.de

Composite bridge 38+50+38, b=14.25m, 2x2HL1100R HISTAR460 , slab 0.30m C30/37
Incremental results of CSM stages; CS48: C+S 36500days part 4 from 5

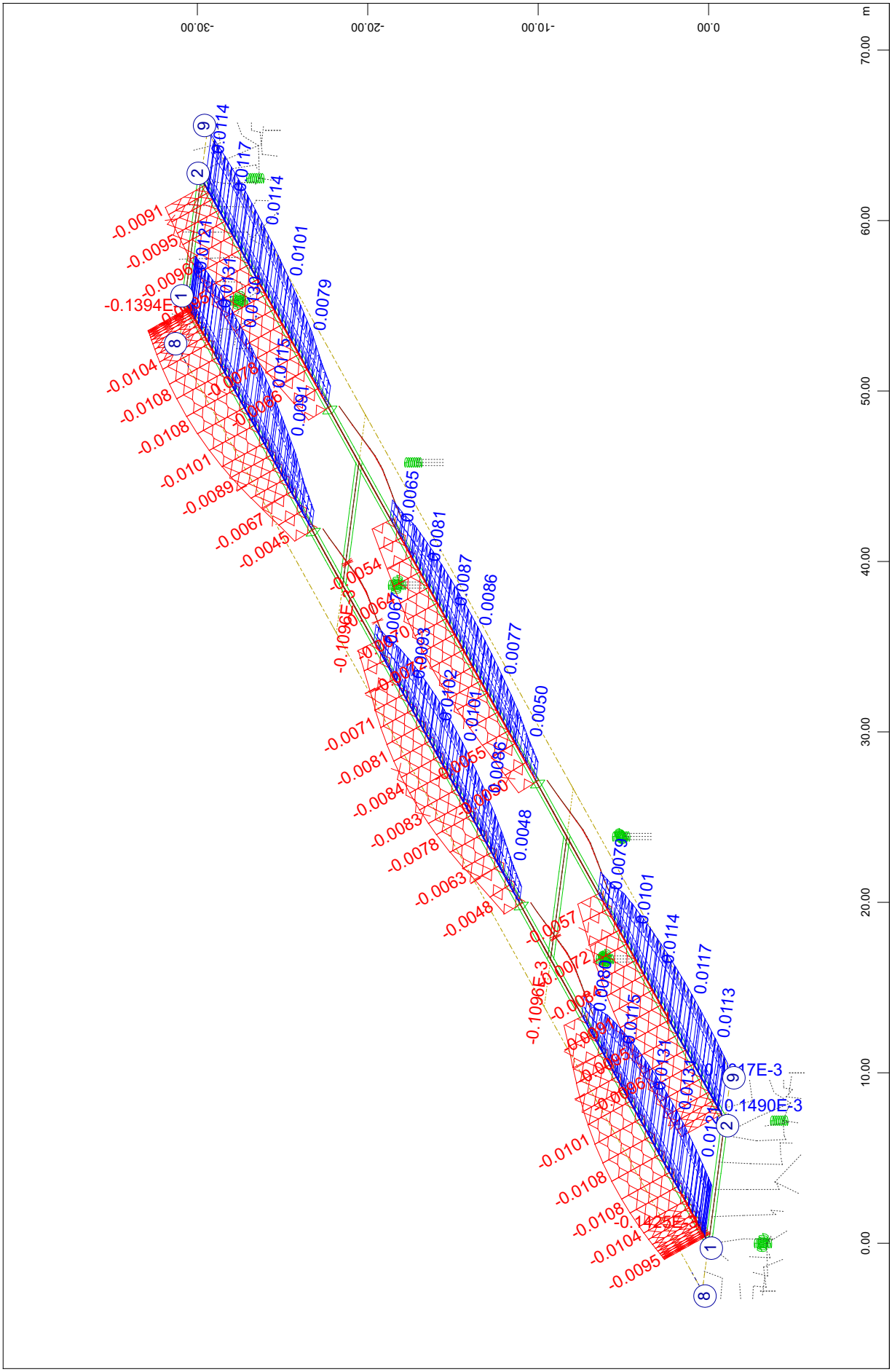

SOFiSTiK AG - www.sofistik.de

Composite bridge 38+50+38, b=14.25m, 2x2HL1100R HISTAR460 , slab 0.30m C30/37

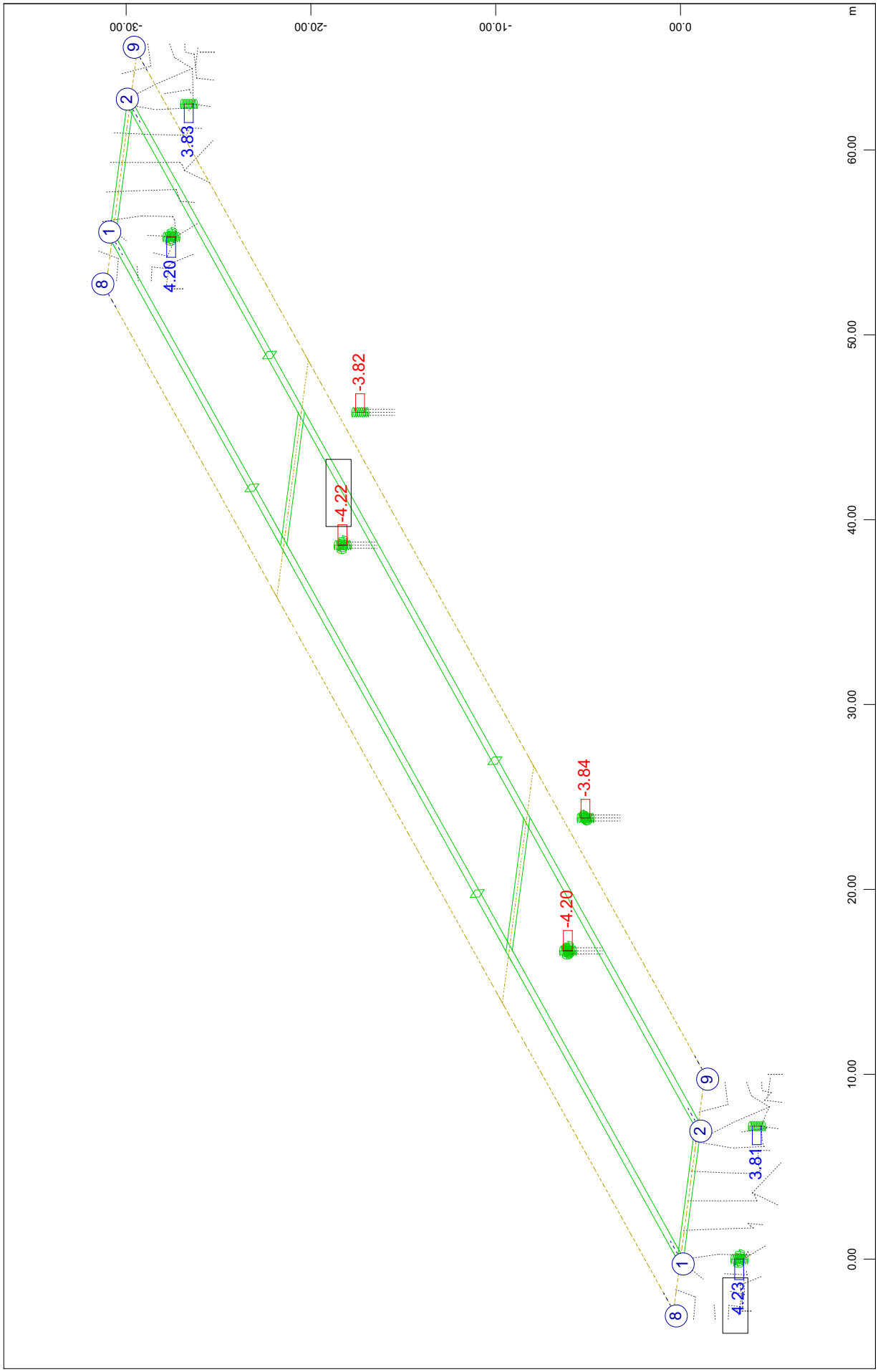

SOFiSTiK AG - www.sofistik.de

Composite bridge 38+50+38, b=14.25m, 2x2HL1100R HISTAR460 , slab 0.30m C30/37

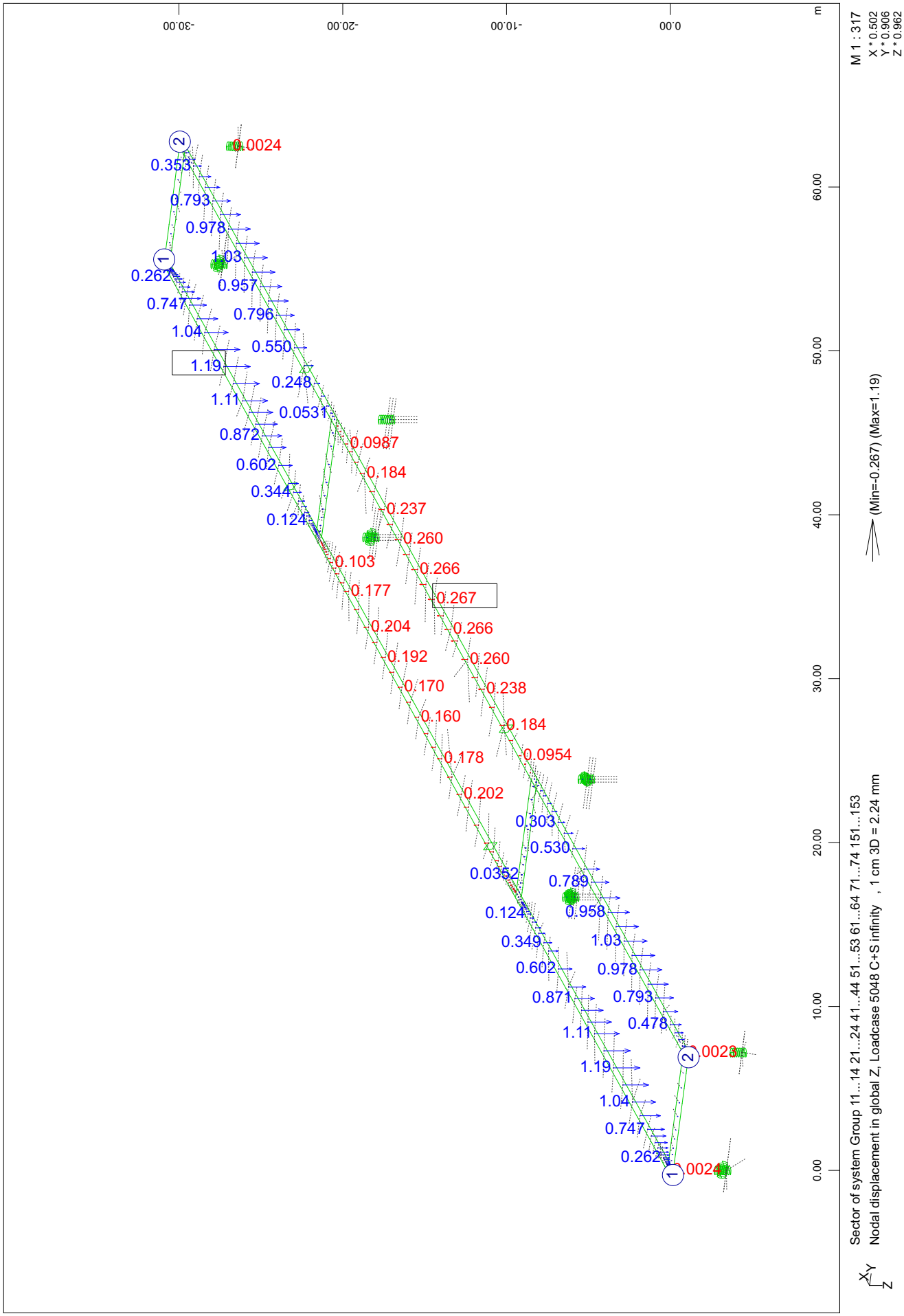

SOFiSTiK AG - www.sofistik.de

Composite bridge 38+50+38, b=14.25m, 2x2HL1100R HISTAR460 , slab 0.30m C30/37

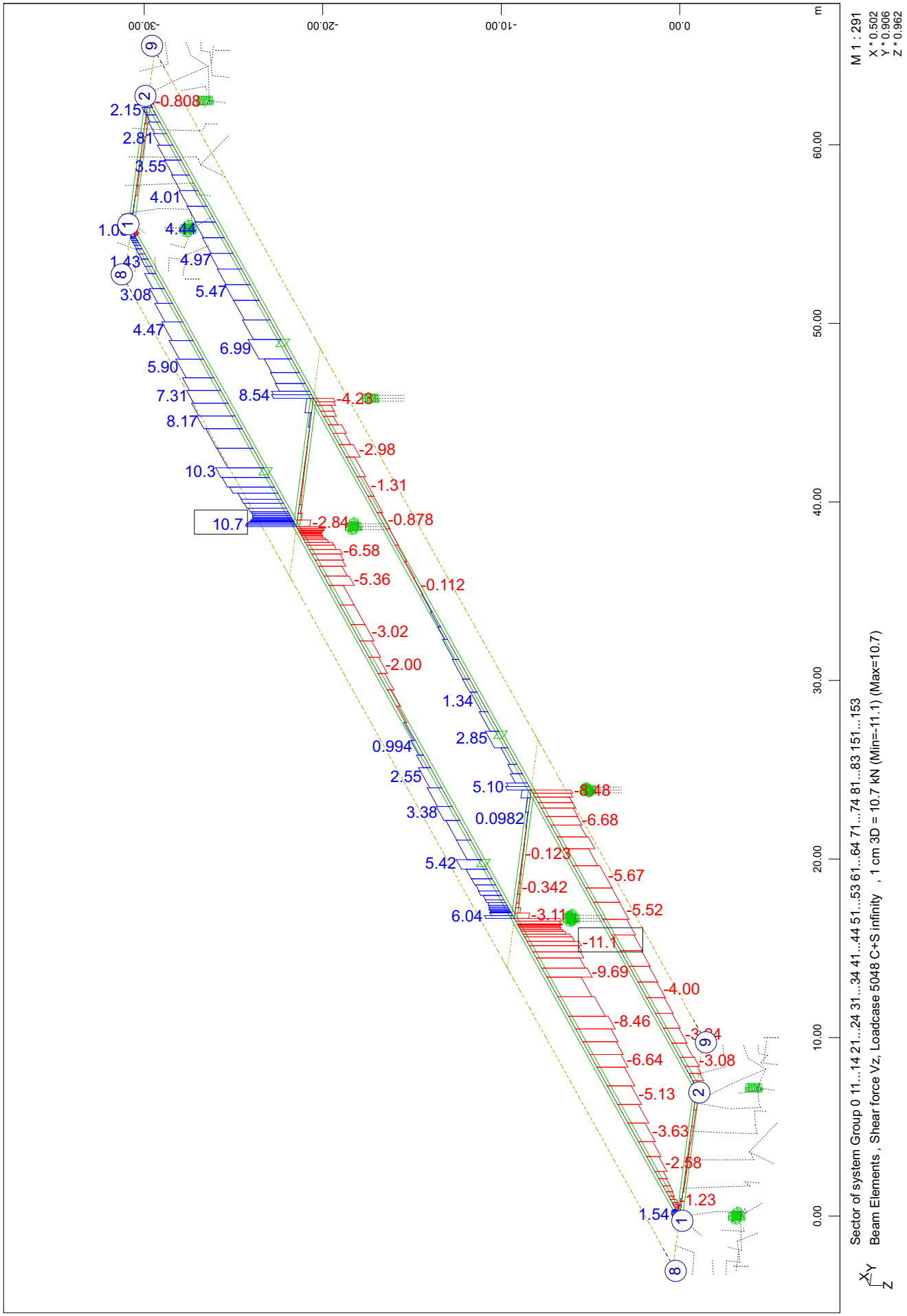

SOFiSTiK AG - www.sofistik.de

Composite bridge 38+50+38, b=14.25m, 2x2HL1100R HISTAR460 , slab 0.30m C30/37

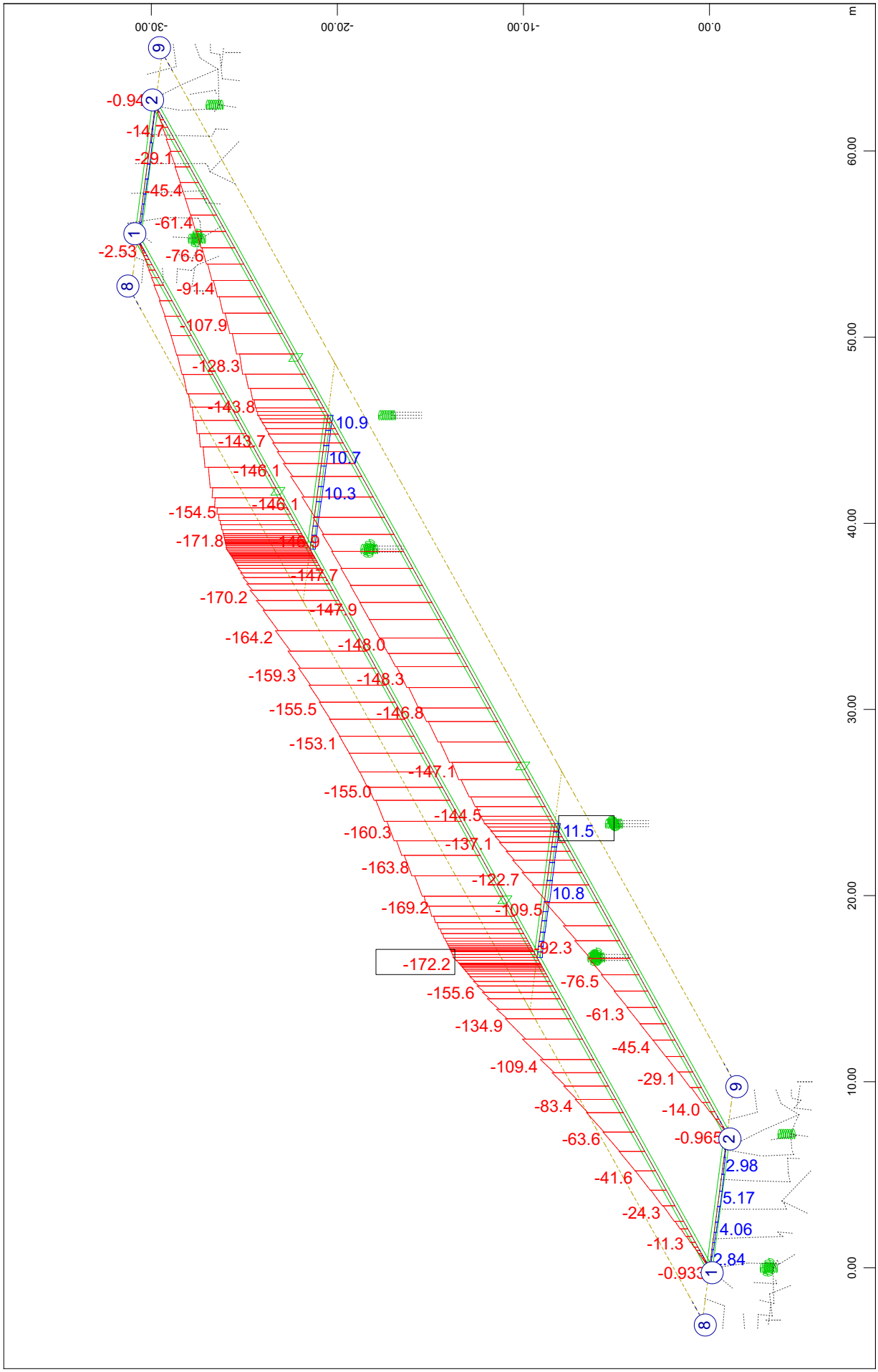

SOFiSTiK AG - www.sofistik.de

Composite bridge 38+50+38, b=14.25m, 2x2HL1100R HISTAR460 , slab 0.30m C30/37

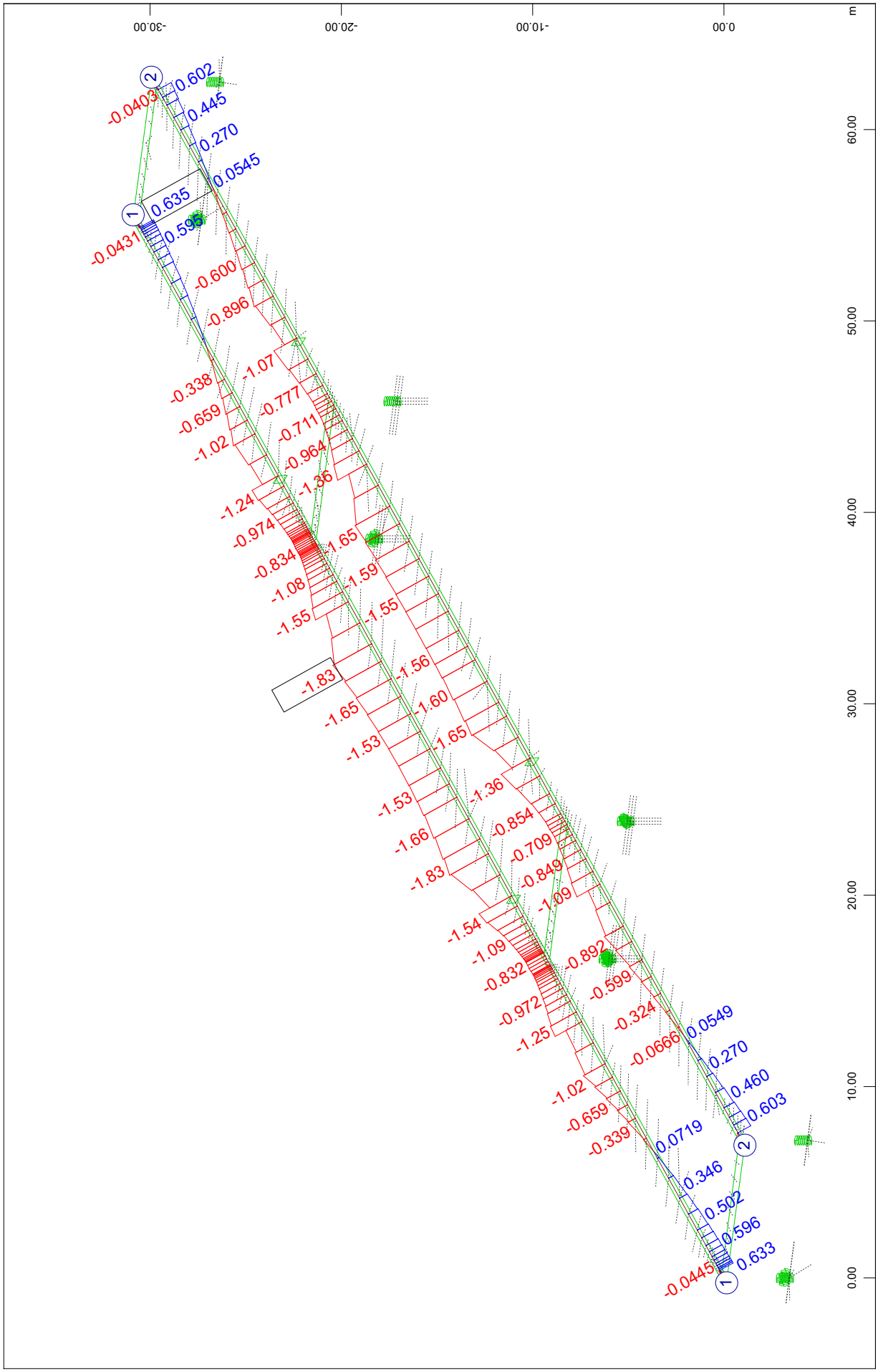

SOFiSTiK AG - www.sofistik.de

Composite bridge 38+50+38, b=14.25m, 2x2HL1100R HISTAR460 , slab 0.30m C30/37

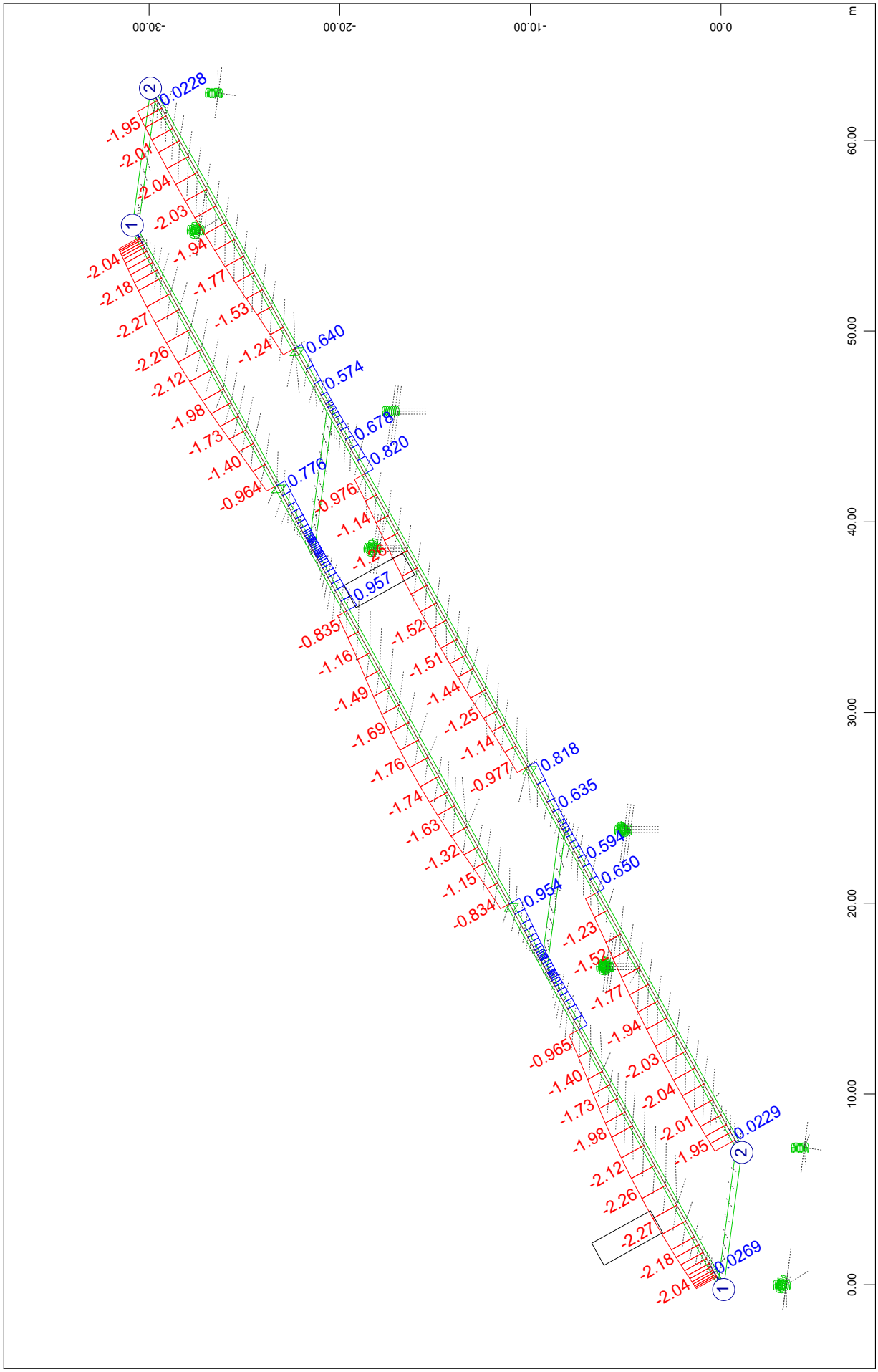

SOFiSTiK AG - www.sofistik.de

Composite bridge 38+50+38, b=14.25m, 2x2HL1100R HISTAR460 , slab 0.30m C30/37

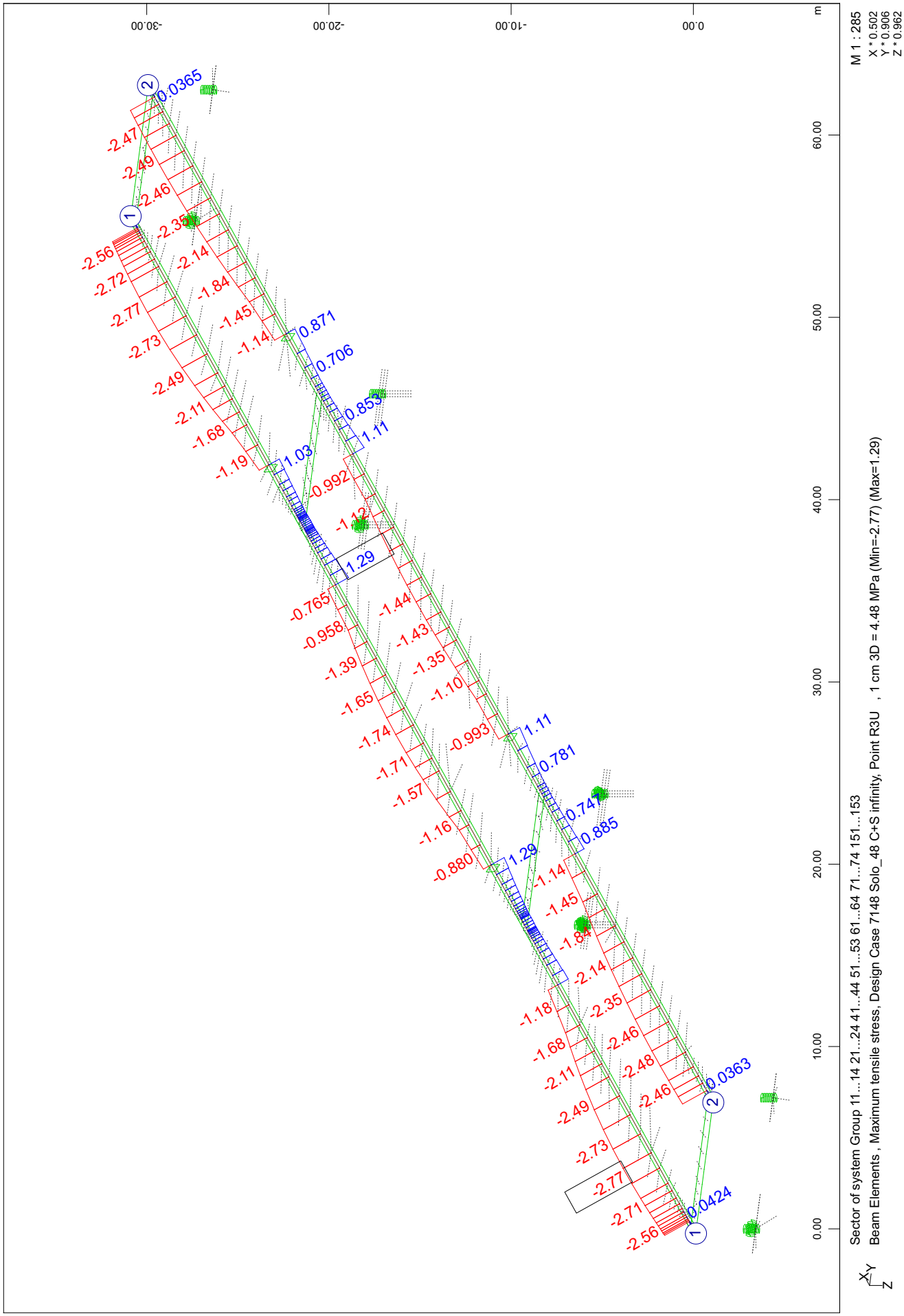

Composite bridge 38+50+38, b=14.25m, 2x2HL1100R HISTAR460 , slab 0.30m C30/37

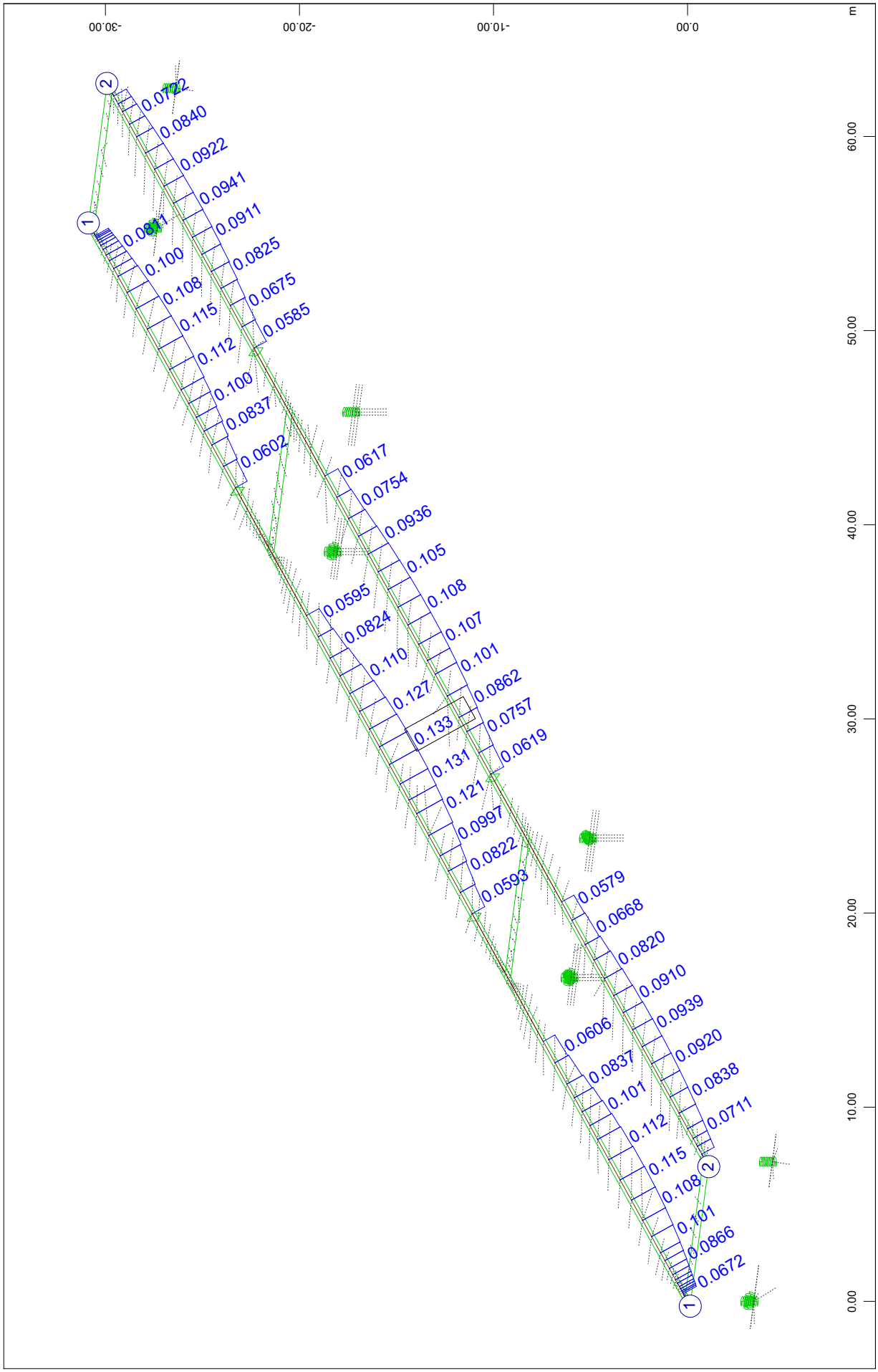

SOFiSTiK AG - www.sofistik.de

Composite bridge 38+50+38, b=14.25m, 2x2HL1100R HISTAR460 , slab 0.30m C30/37

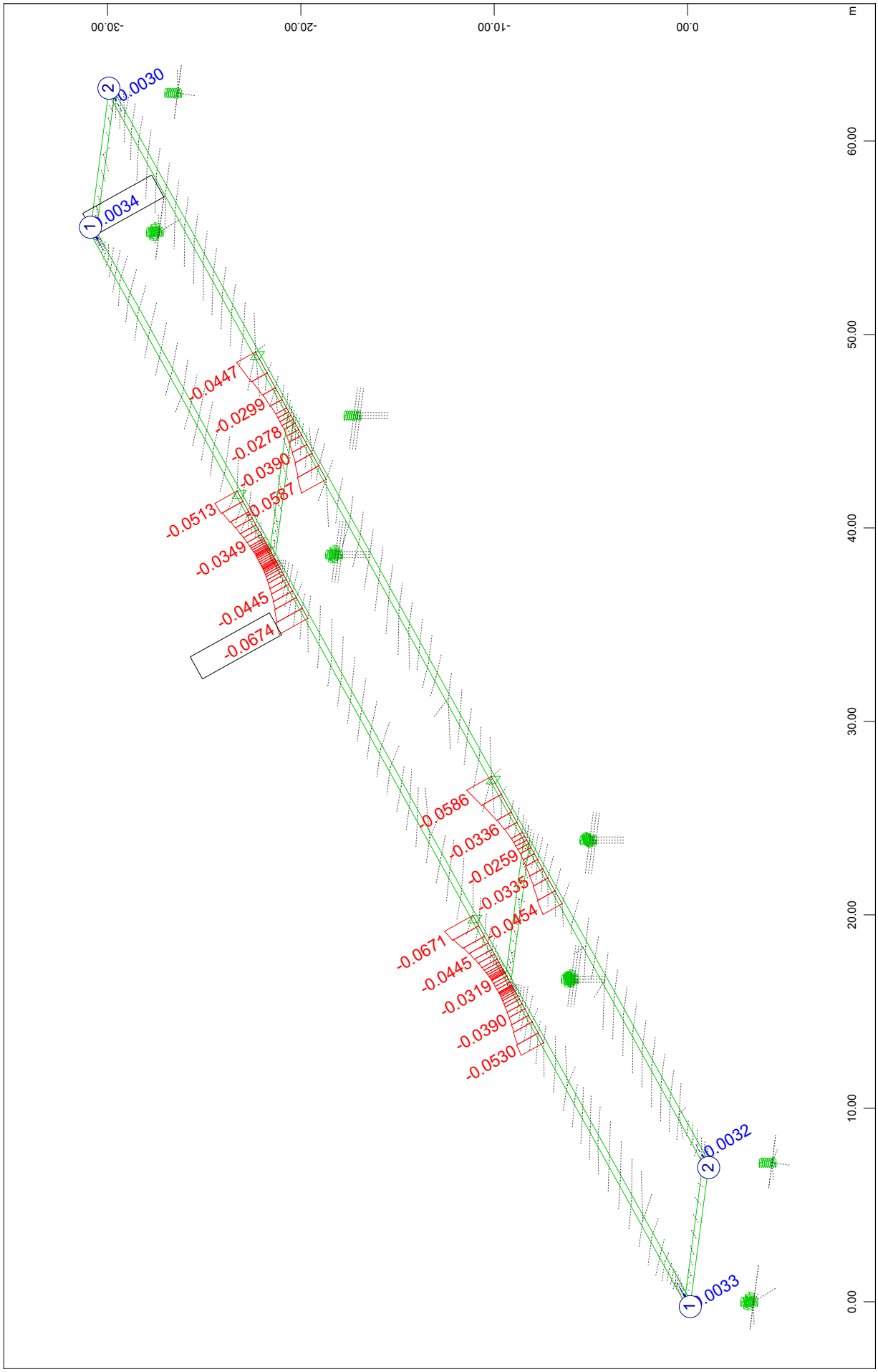

SOFiSTiK AG - www.sofistik.de

Composite bridge 38+50+38, b=14.25m, 2x2HL1100R HISTAR460 , slab 0.30m C30/37
Incremental results of CSM stages; CS49: C+S 36500days part 5 from 5

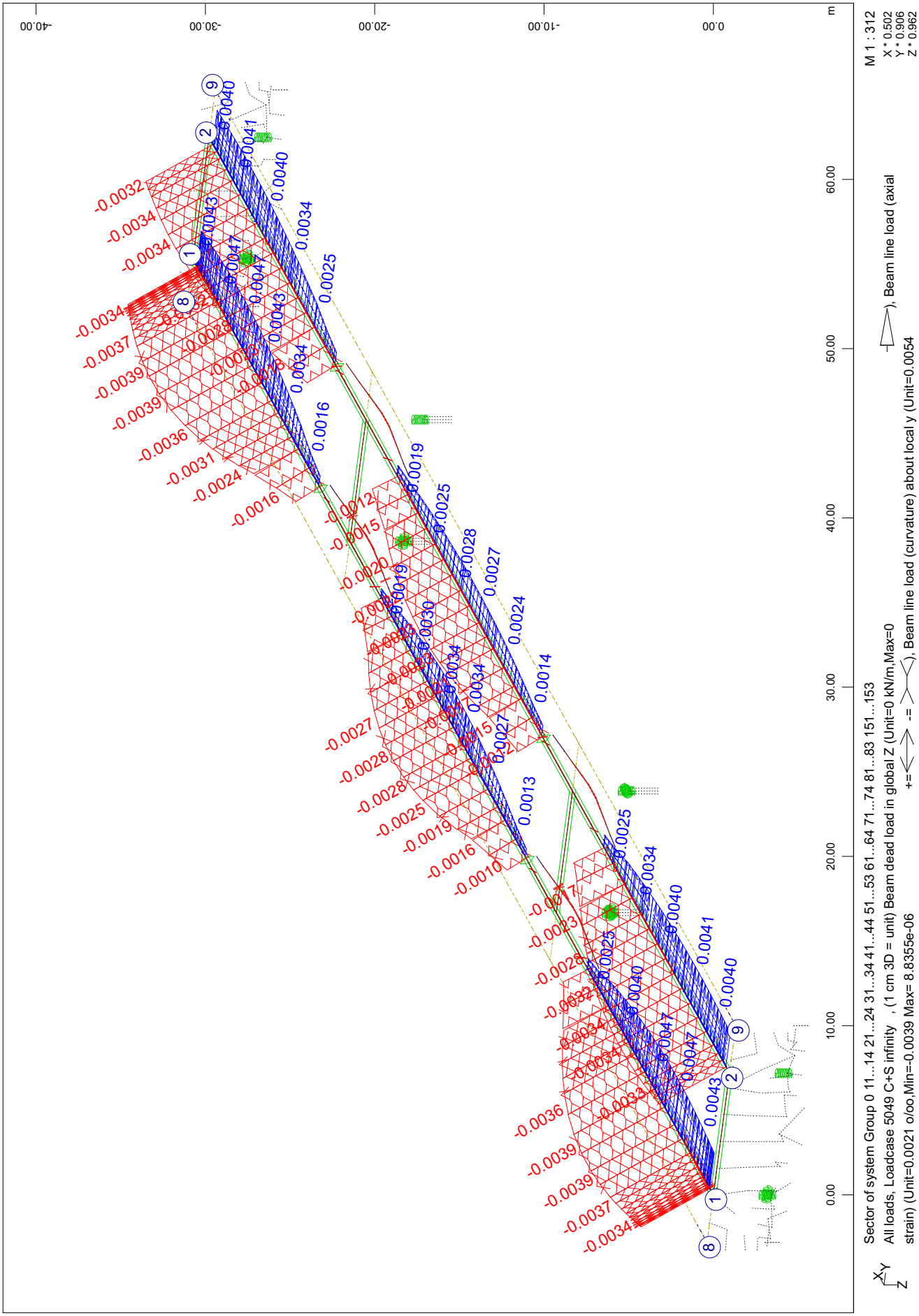

SOFiSTiK AG - www.sofistik.de

Composite bridge 38+50+38, b=14.25m, 2x2HL1100R HISTAR460 , slab 0.30m C30/37

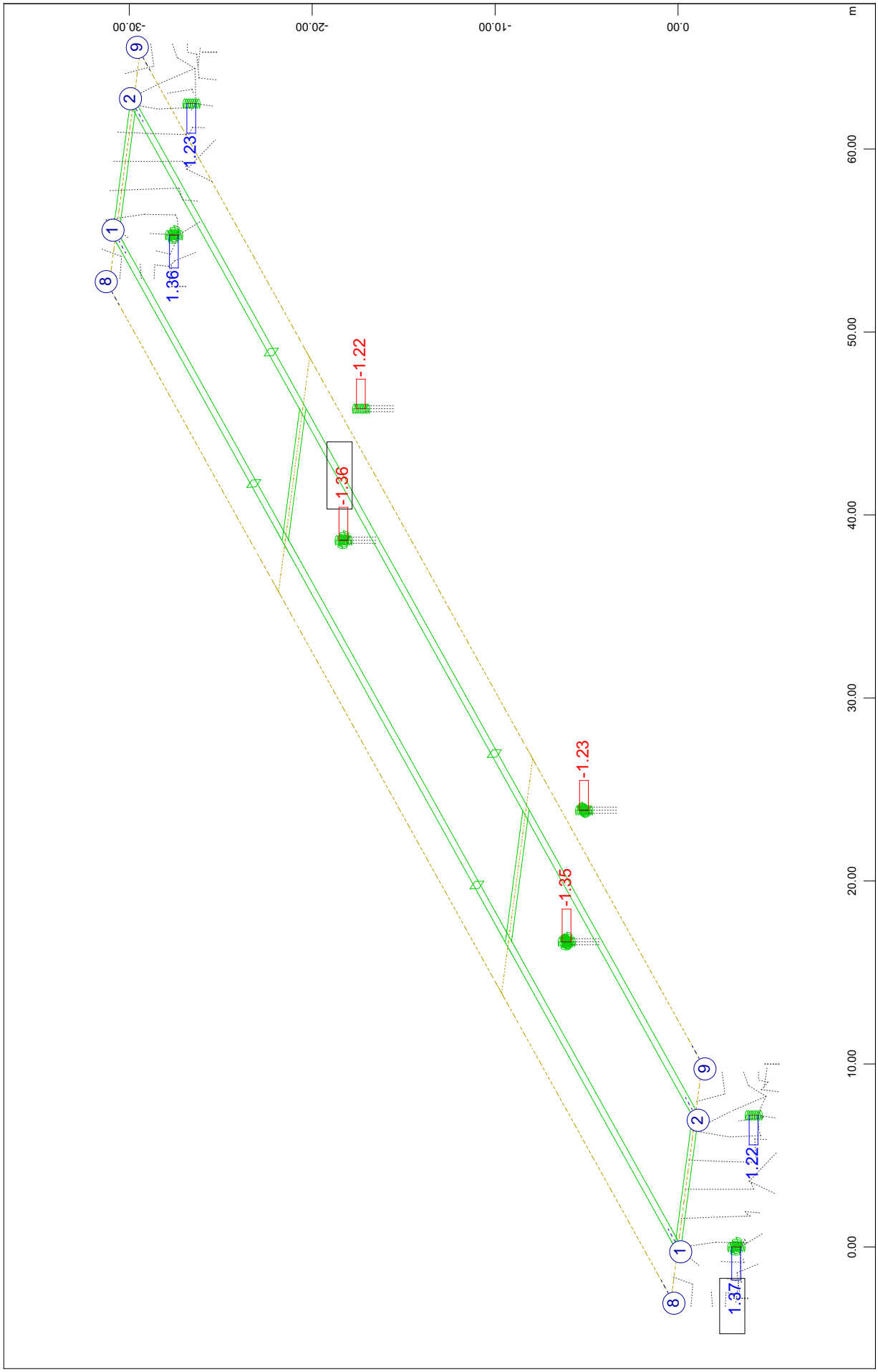

SOFiSTiK AG - www.sofistik.de

Composite bridge 38+50+38, b=14.25m, 2x2HL1100R HISTAR460 , slab 0.30m C30/37

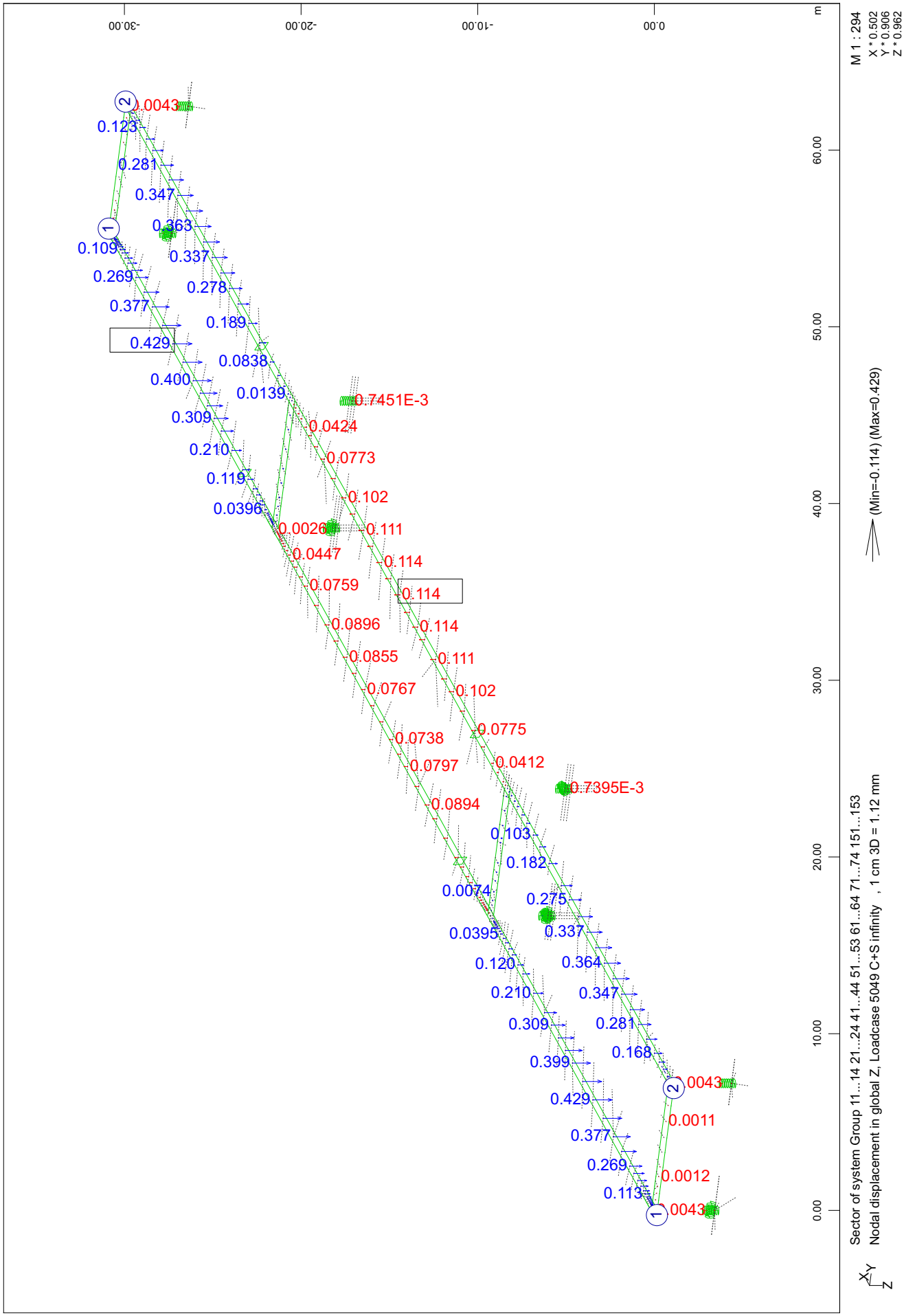

SOFiSTiK AG - www.sofistik.de

Composite bridge 38+50+38, b=14.25m, 2x2HL1100R HISTAR460 , slab 0.30m C30/37

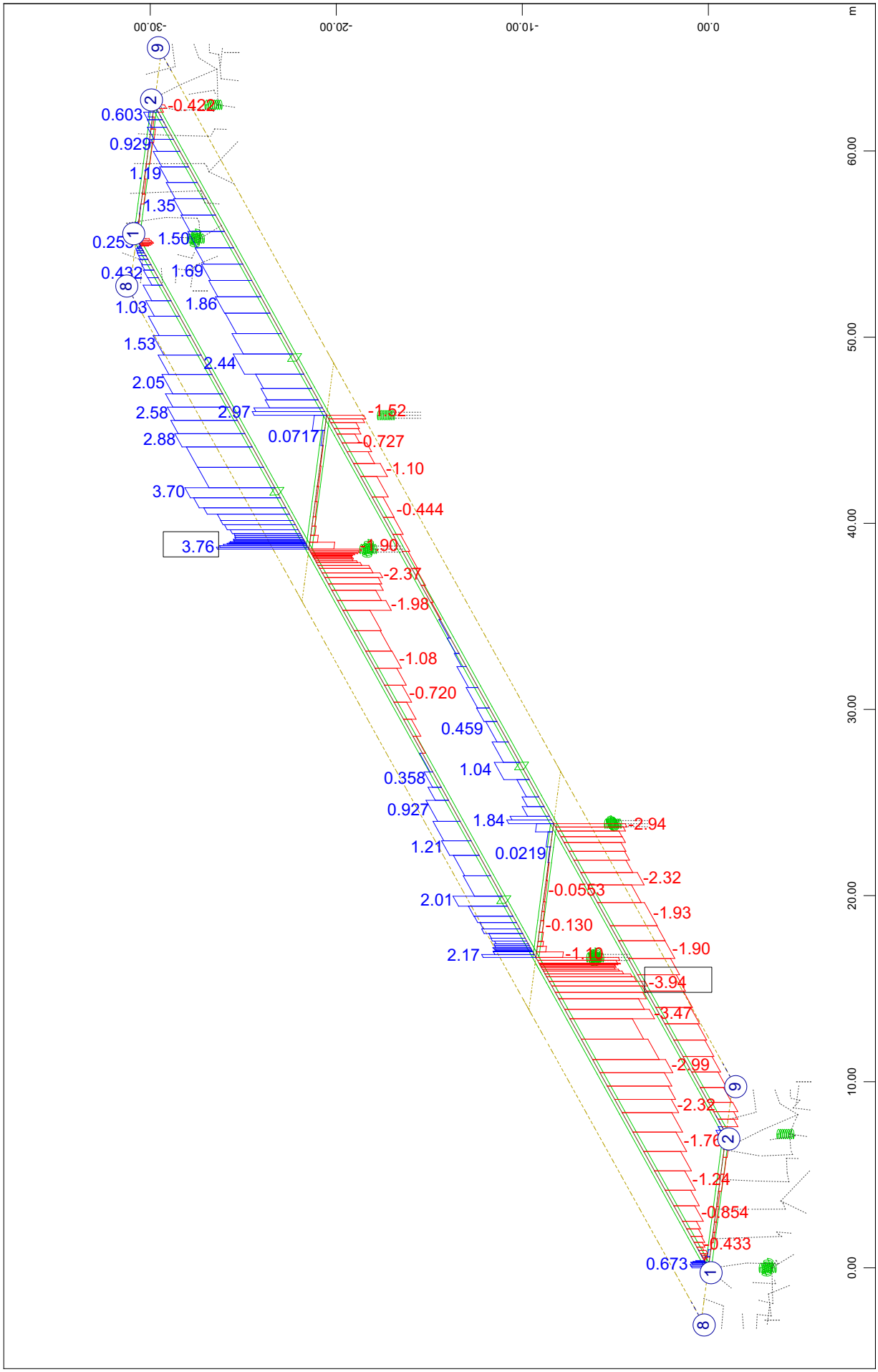

SOFiSTiK AG - www.sofistik.de

Composite bridge 38+50+38, b=14.25m, 2x2HL1100R HISTAR460 , slab 0.30m C30/37

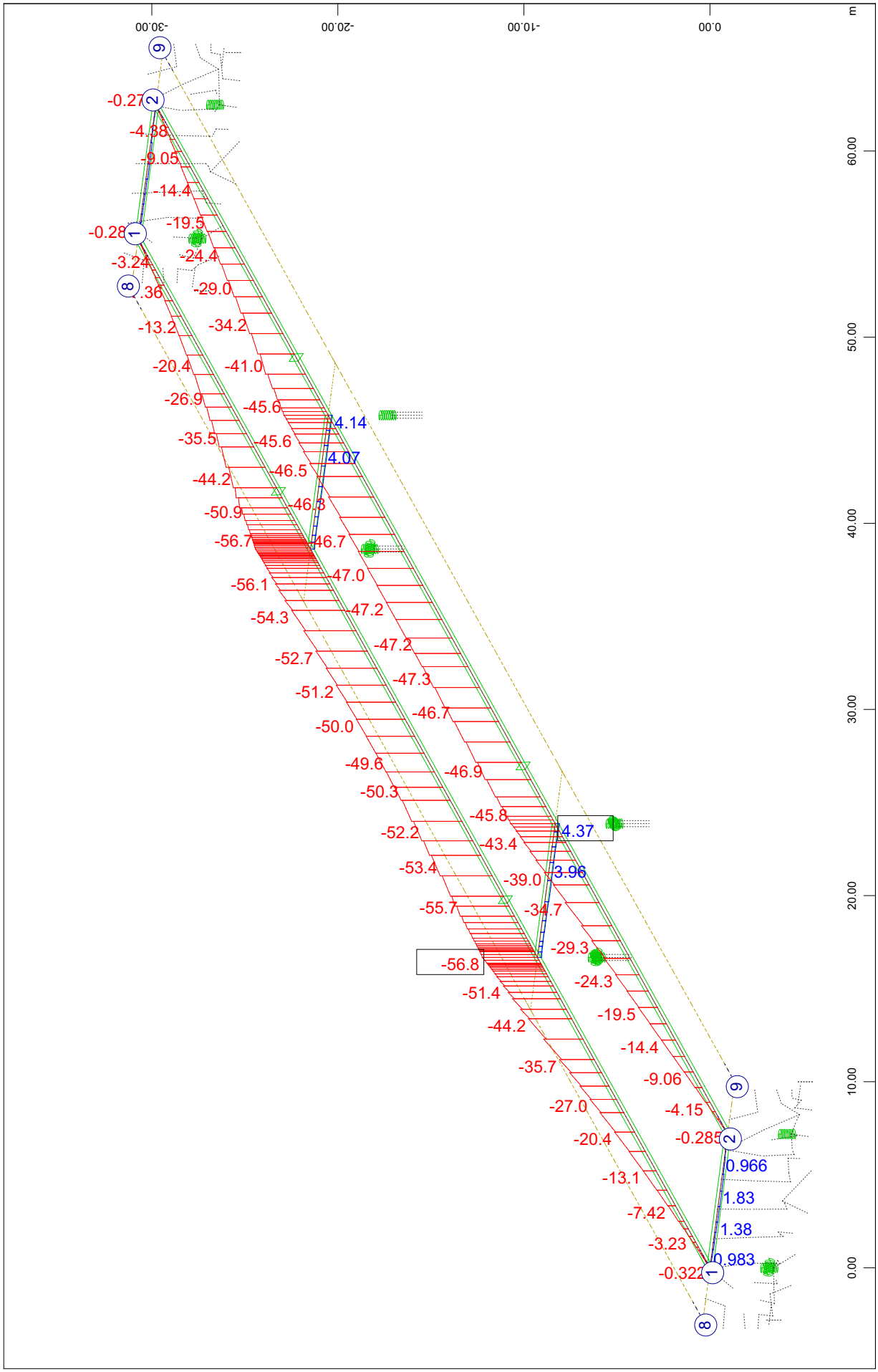

SOFiSTiK AG - www.sofistik.de

Composite bridge 38+50+38, b=14.25m, 2x2HL1100R HISTAR460 , slab 0.30m C30/37

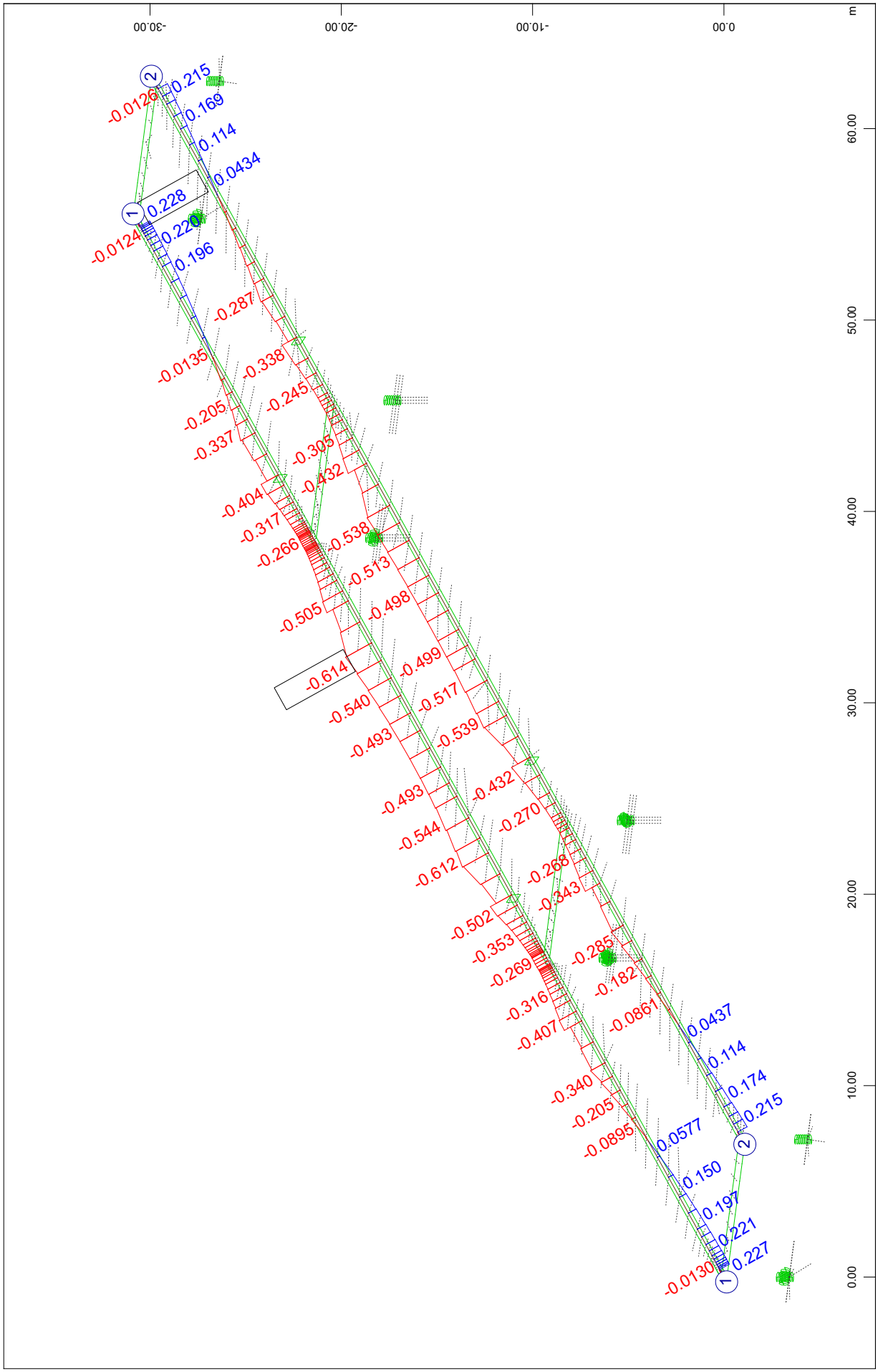

SOFiSTiK AG - www.sofistik.de

Composite bridge 38+50+38, b=14.25m, 2x2HL1100R HISTAR460 , slab 0.30m C30/37

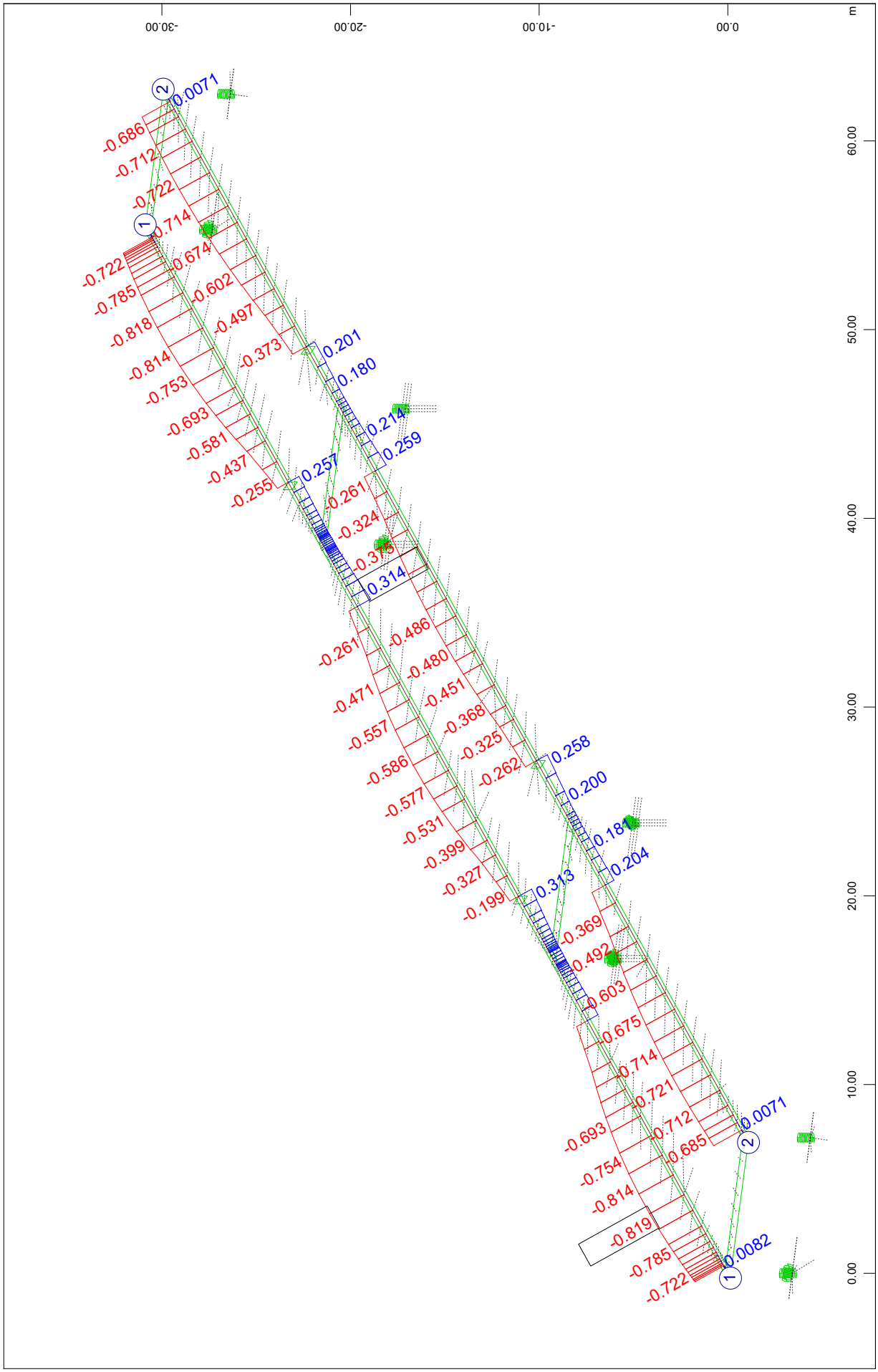

SOFiSTiK AG - www.sofistik.de

Composite bridge 38+50+38, b=14.25m, 2x2HL1100R HISTAR460 , slab 0.30m C30/37

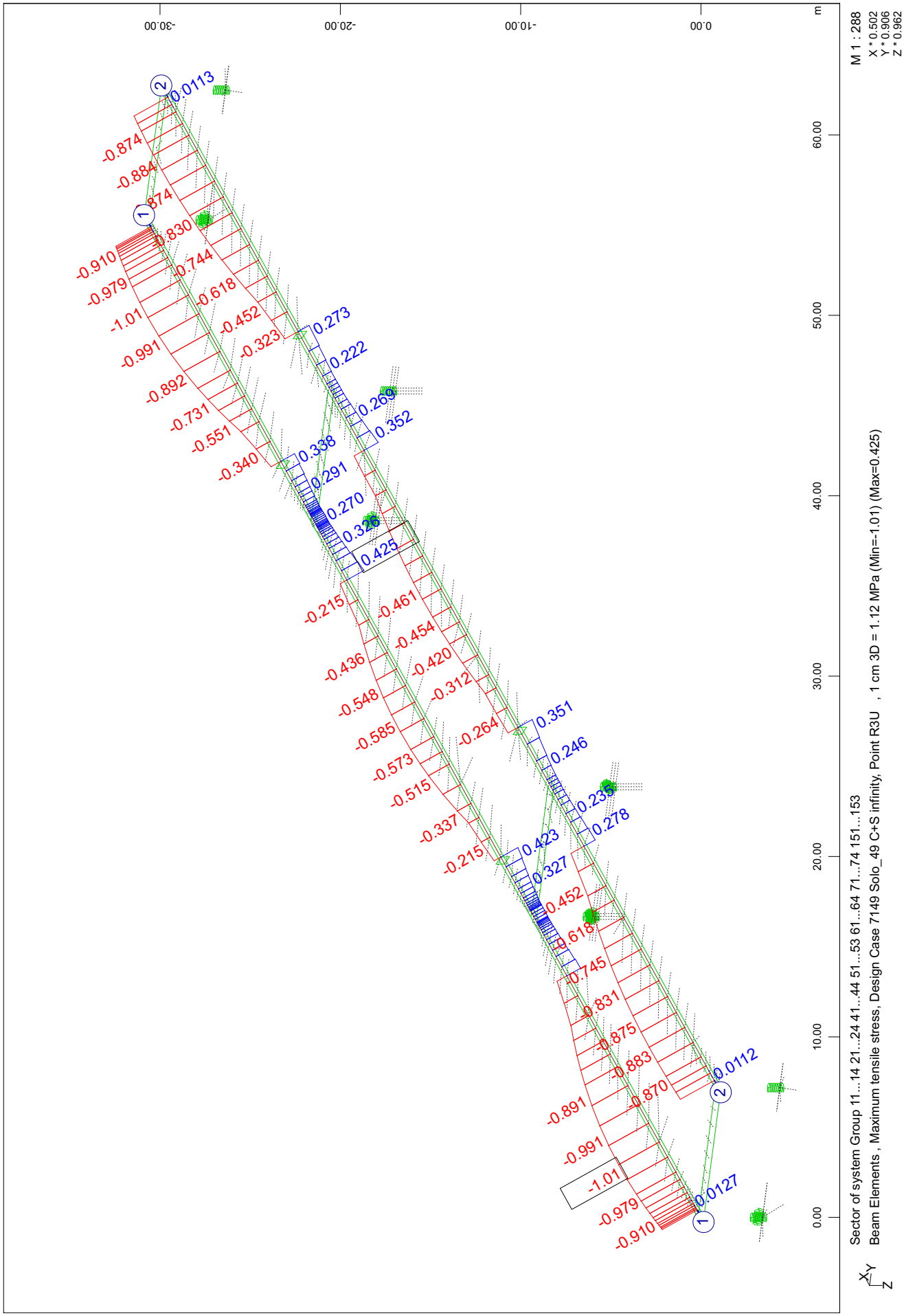

Composite bridge 38+50+38, b=14.25m, 2x2HL1100R HISTAR460 , slab 0.30m C30/37

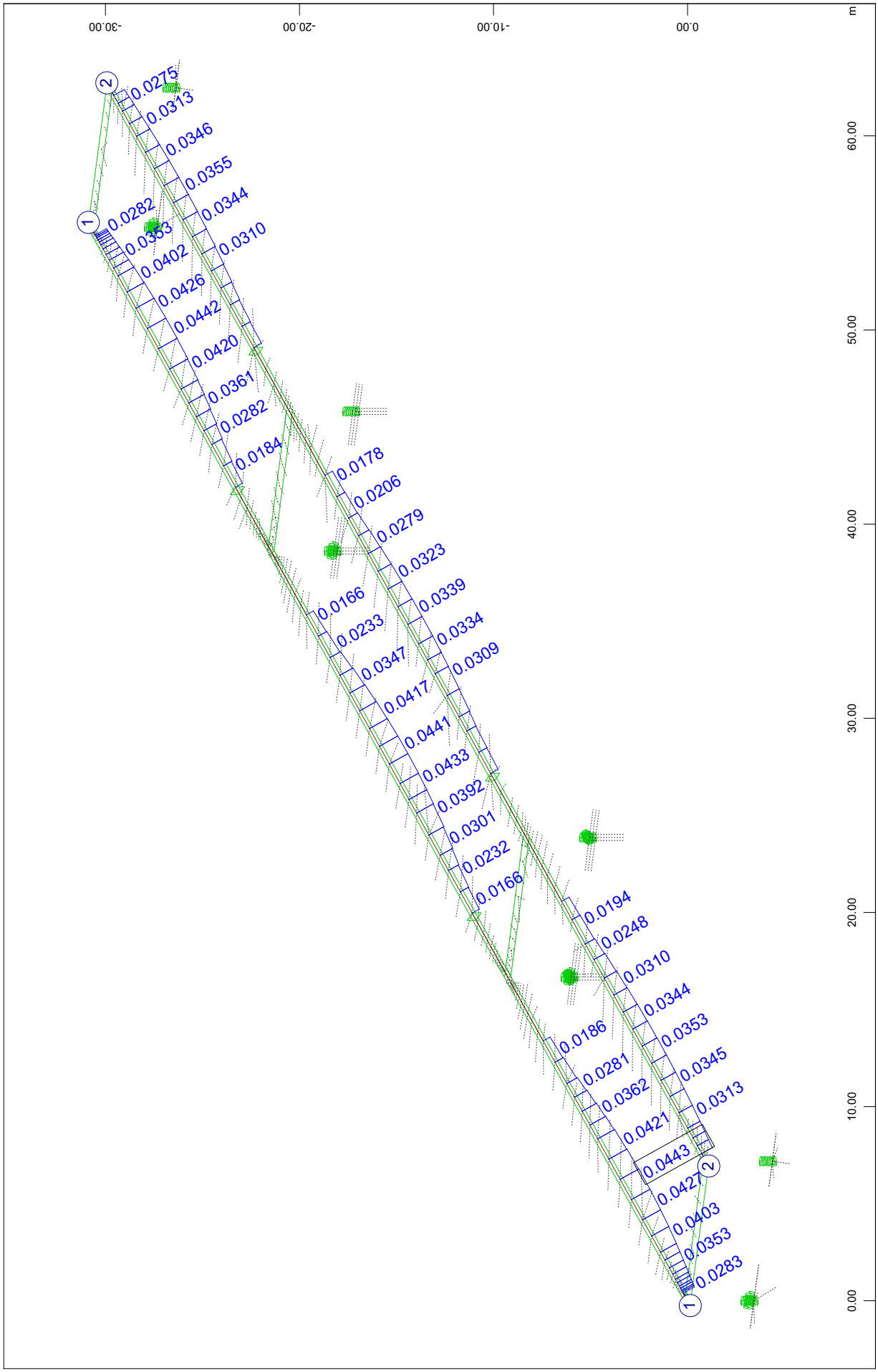

SOFiSTiK AG - www.sofistik.de

Composite bridge 38+50+38, b=14.25m, 2x2HL1100R HISTAR460 , slab 0.30m C30/37

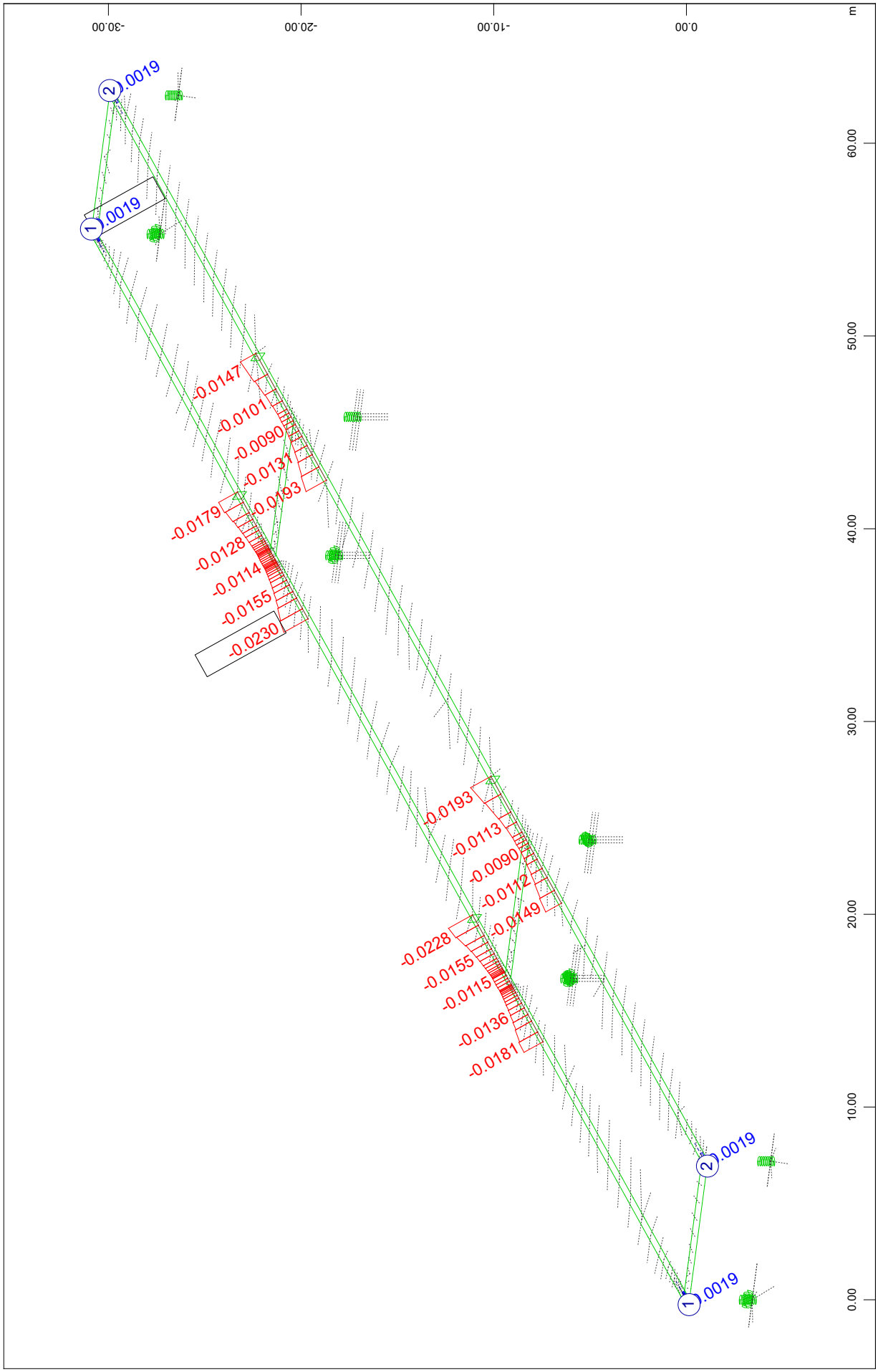

SOFiSTiK AG - www.sofistik.de

Composite bridge 38+50+38, b=14.25m, 2x2HL1100R HISTAR460 , slab 0.30m C30/37
Results for characteristic part-precombinations of loads: G_1

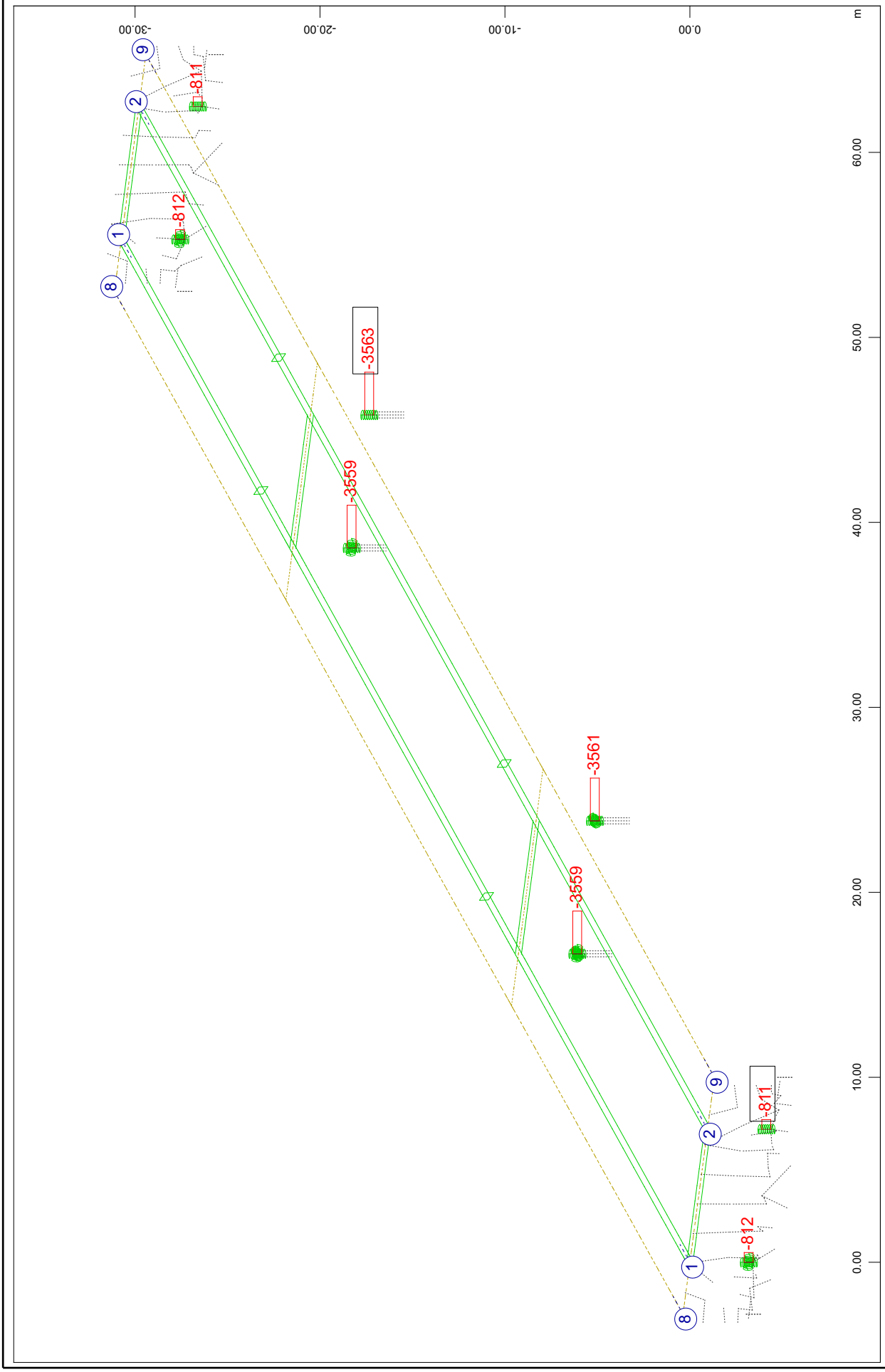

SOFiSTiK AG - www.sofistik.de

Composite bridge 38+50+38, b=14.25m, 2x2HL1100R HISTAR460 , slab 0.30m C30/37
Results for characteristic part-precombinations of loads: G_1

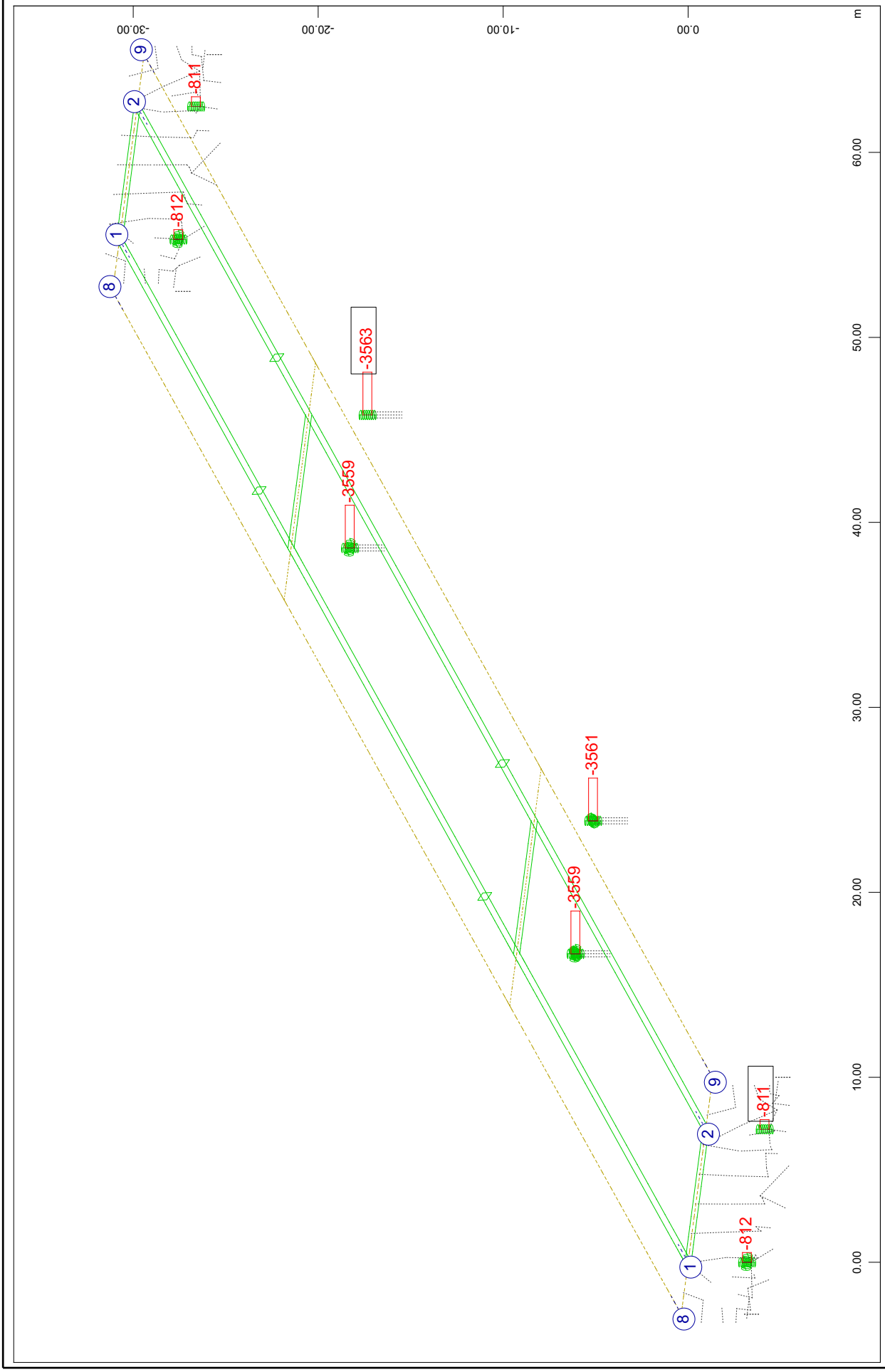

SOFiSTiK AG - www.sofistik.de

Composite bridge 38+50+38, b=14.25m, 2x2HL1100R HISTAR460 , slab 0.30m C30/37
Results for characteristic part-precombinations of loads: G_1

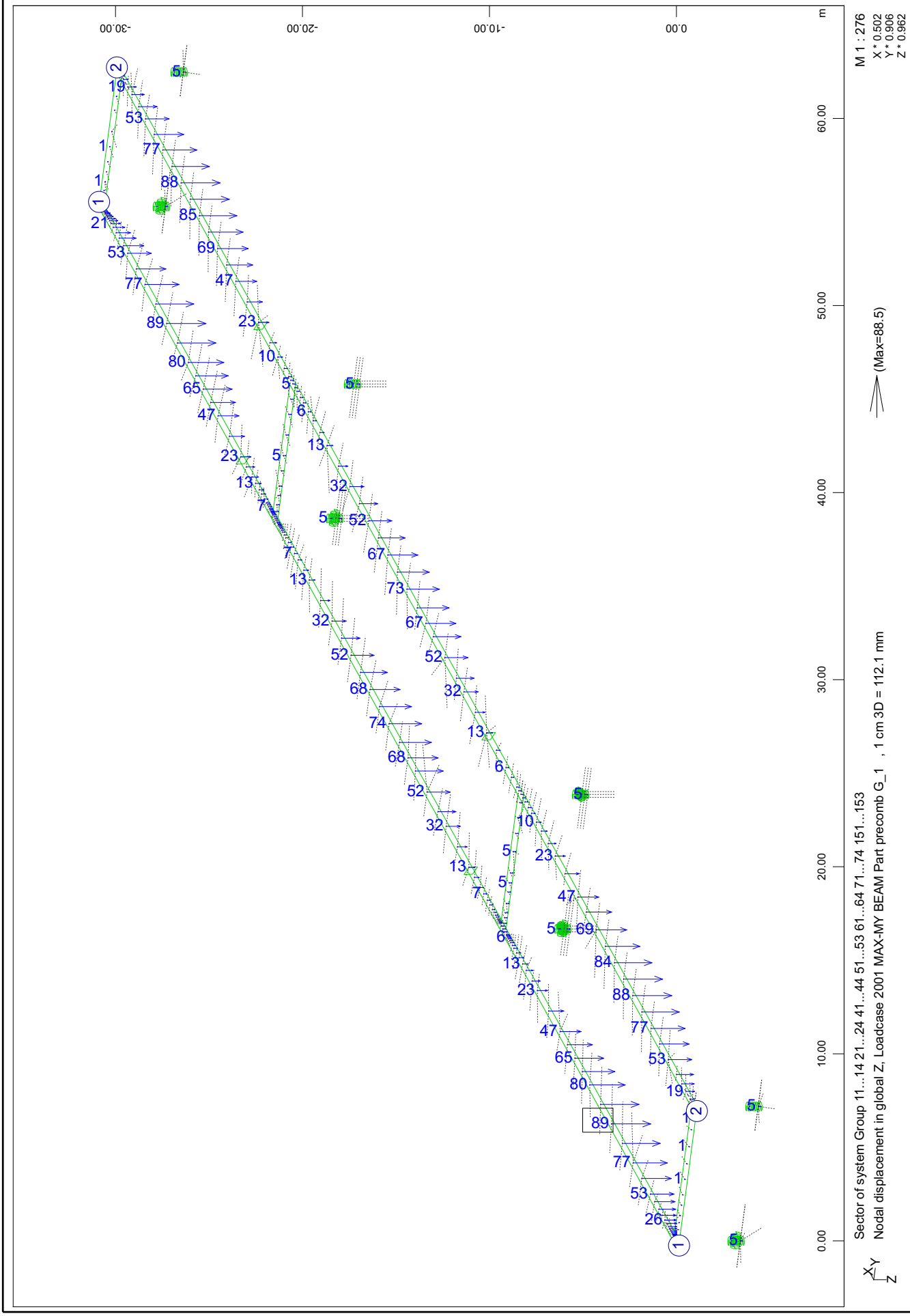

SOFiSTiK AG - www.sofistik.de

Composite bridge 38+50+38, b=14.25m, 2x2HL1100R HISTAR460 , slab 0.30m C30/37
Results for characteristic part-precombinations of loads: G_1

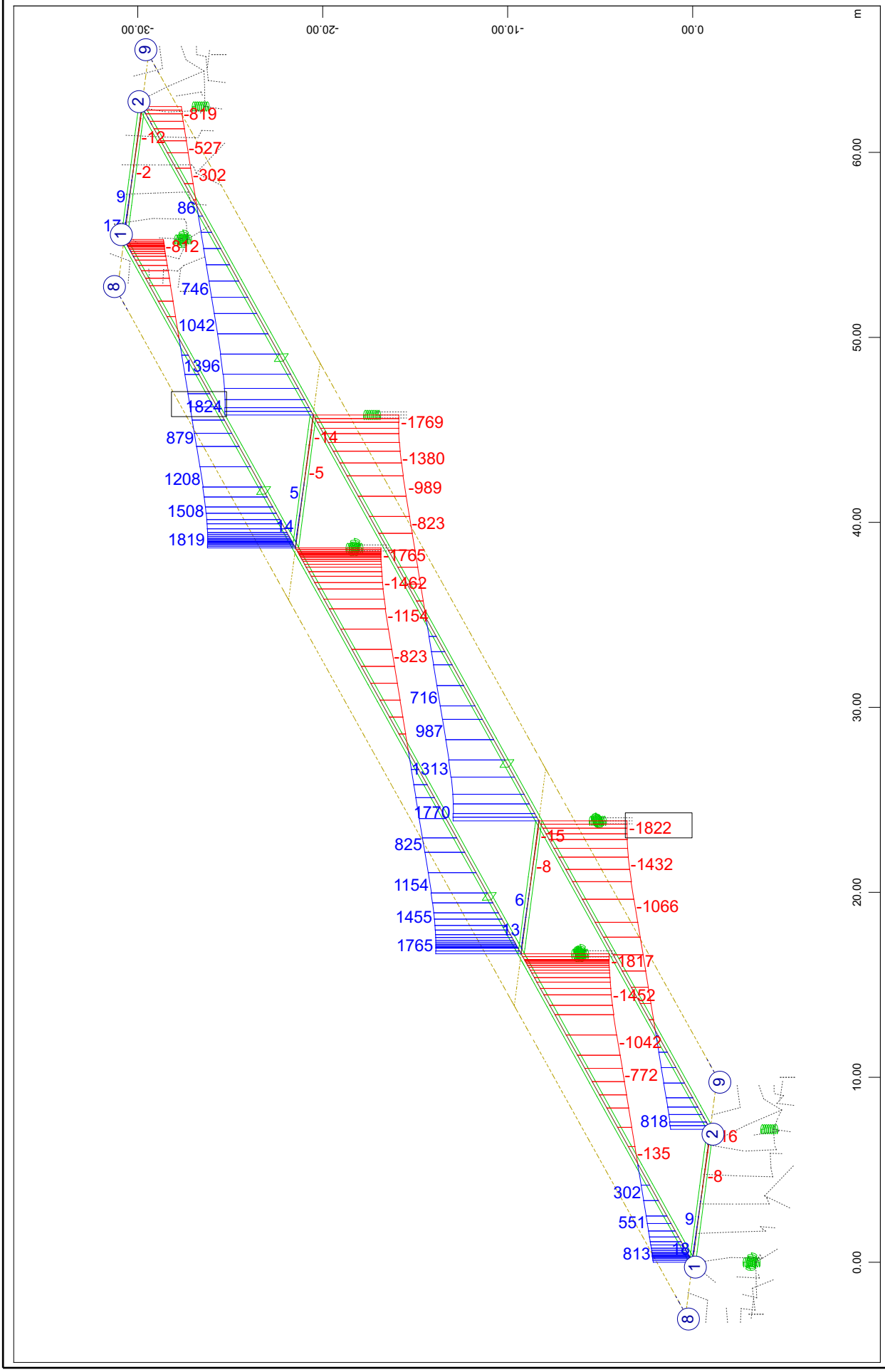

Composite bridge 38+50+38, b=14.25m, 2x2HL1100R HISTAR460 , slab 0.30m C30/37
Results for characteristic part-precombinations of loads: G_1

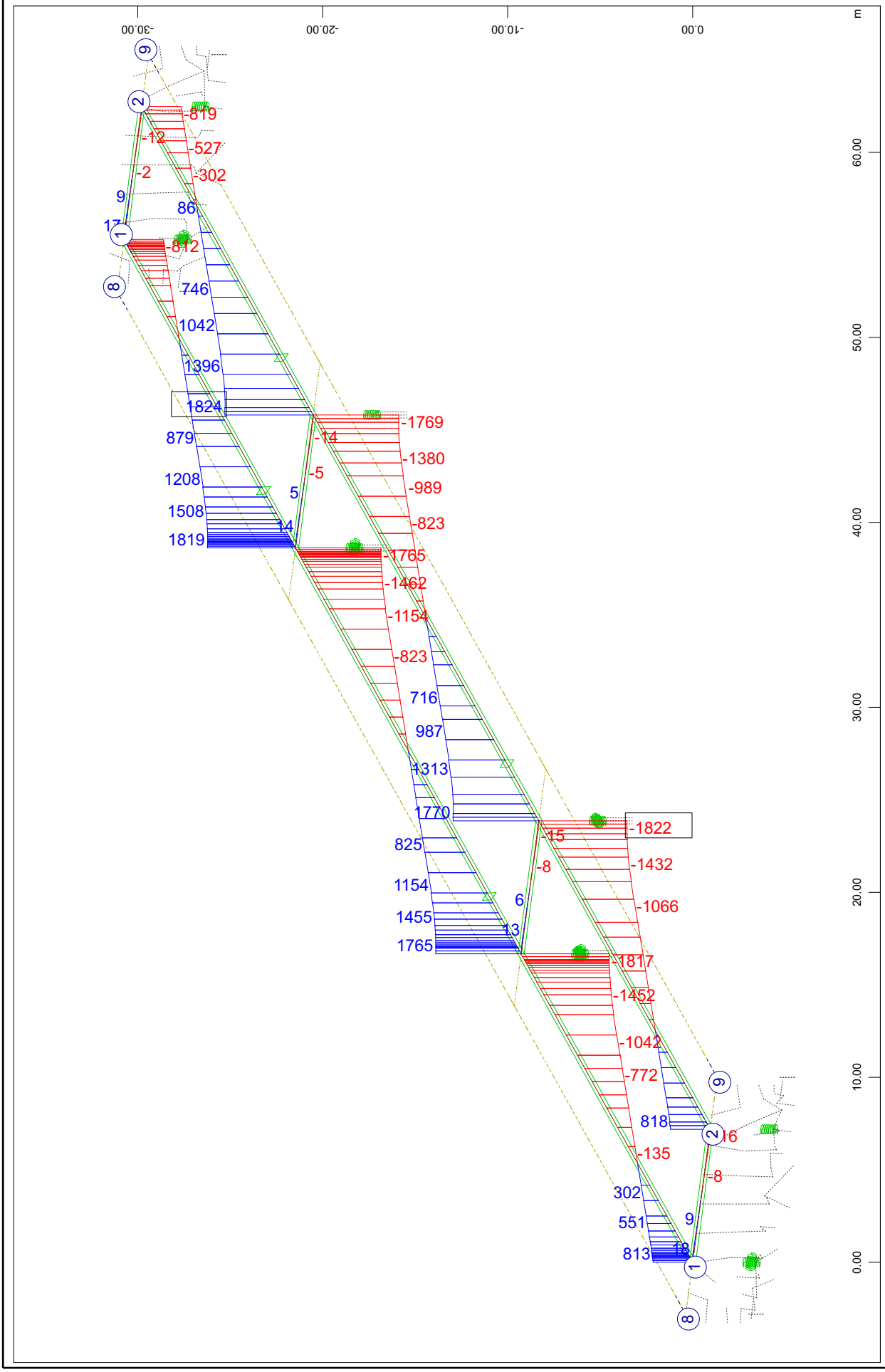

Composite bridge 38+50+38, b=14.25m, 2x2HL1100R HISTAR460 , slab 0.30m C30/37
Results for characteristic part-precombinations of loads: G_1

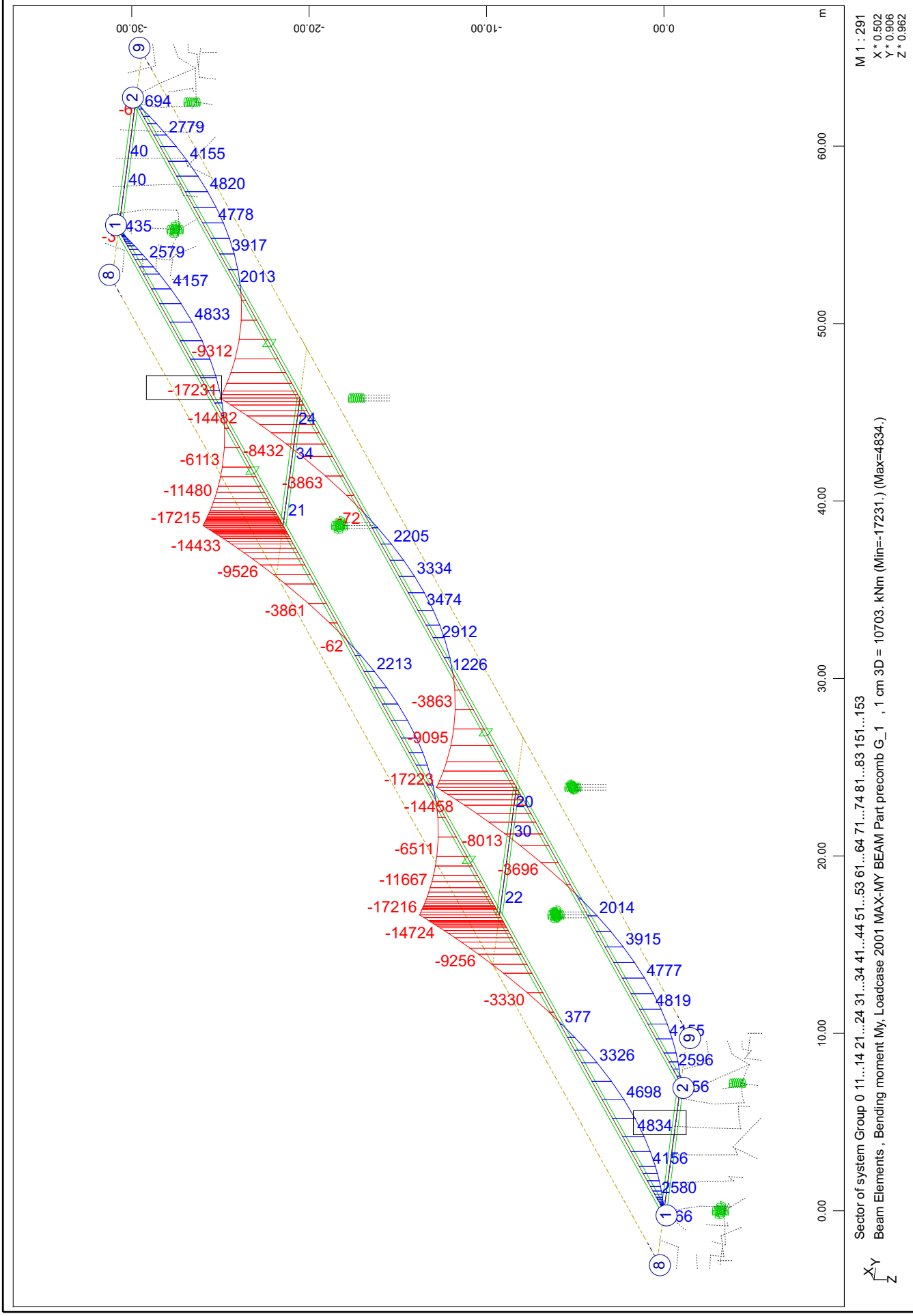

Composite bridge 38+50+38, b=14.25m, 2x2HL1100R HISTAR460 , slab 0.30m C30/37
Results for characteristic part-precombinations of loads: G_1

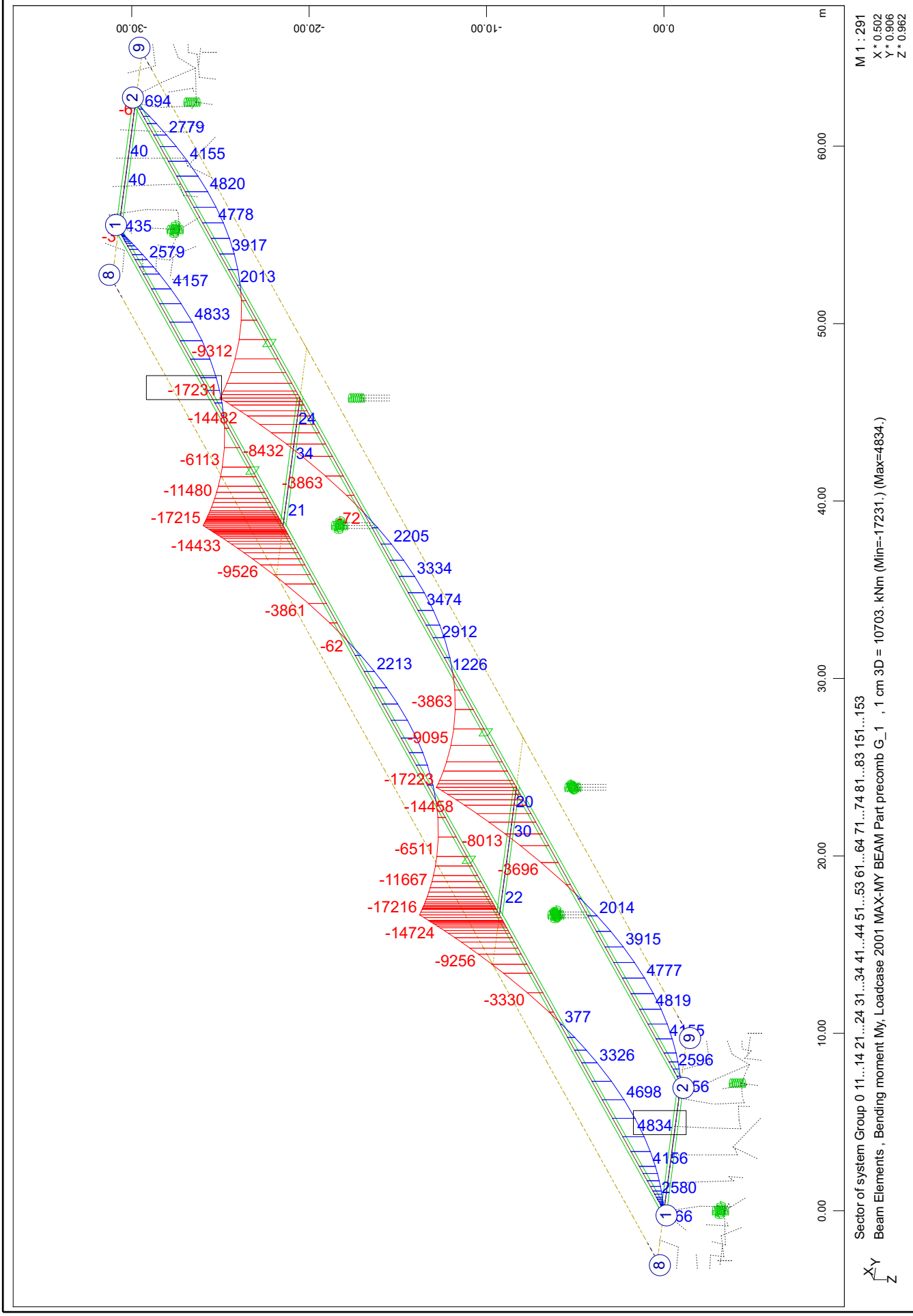

Composite bridge 38+50+38, b=14.25m, 2x2HL1100R HISTAR460 , slab 0.30m C30/37
Results for characteristic part-precombinations of loads: G_1

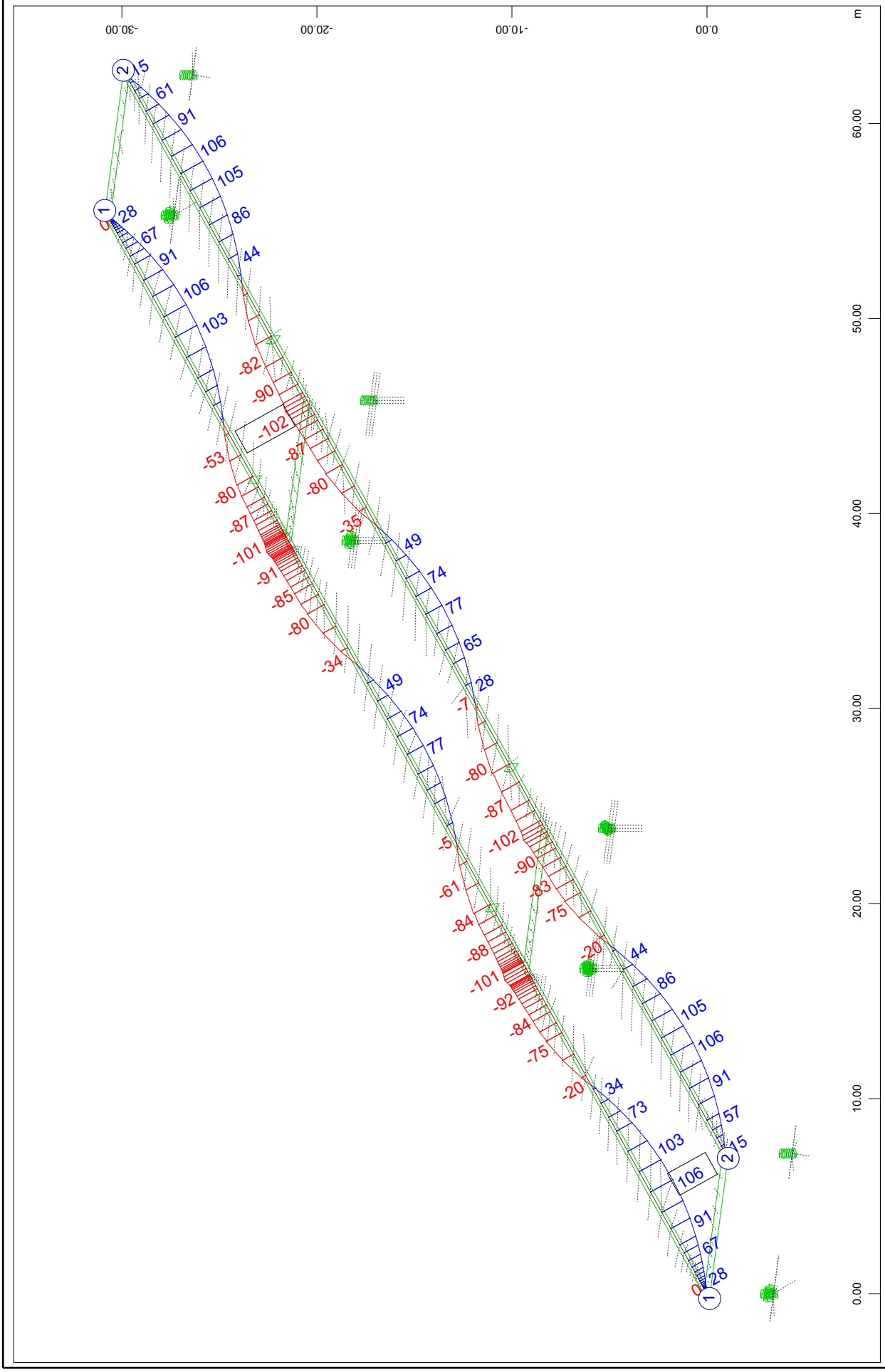

SOFiSTiK AG - www.sofistik.de

Composite bridge 38+50+38, b=14.25m, 2x2HL1100R HISTAR460 , slab 0.30m C30/37
Results for characteristic part-precombinations of loads: G_1

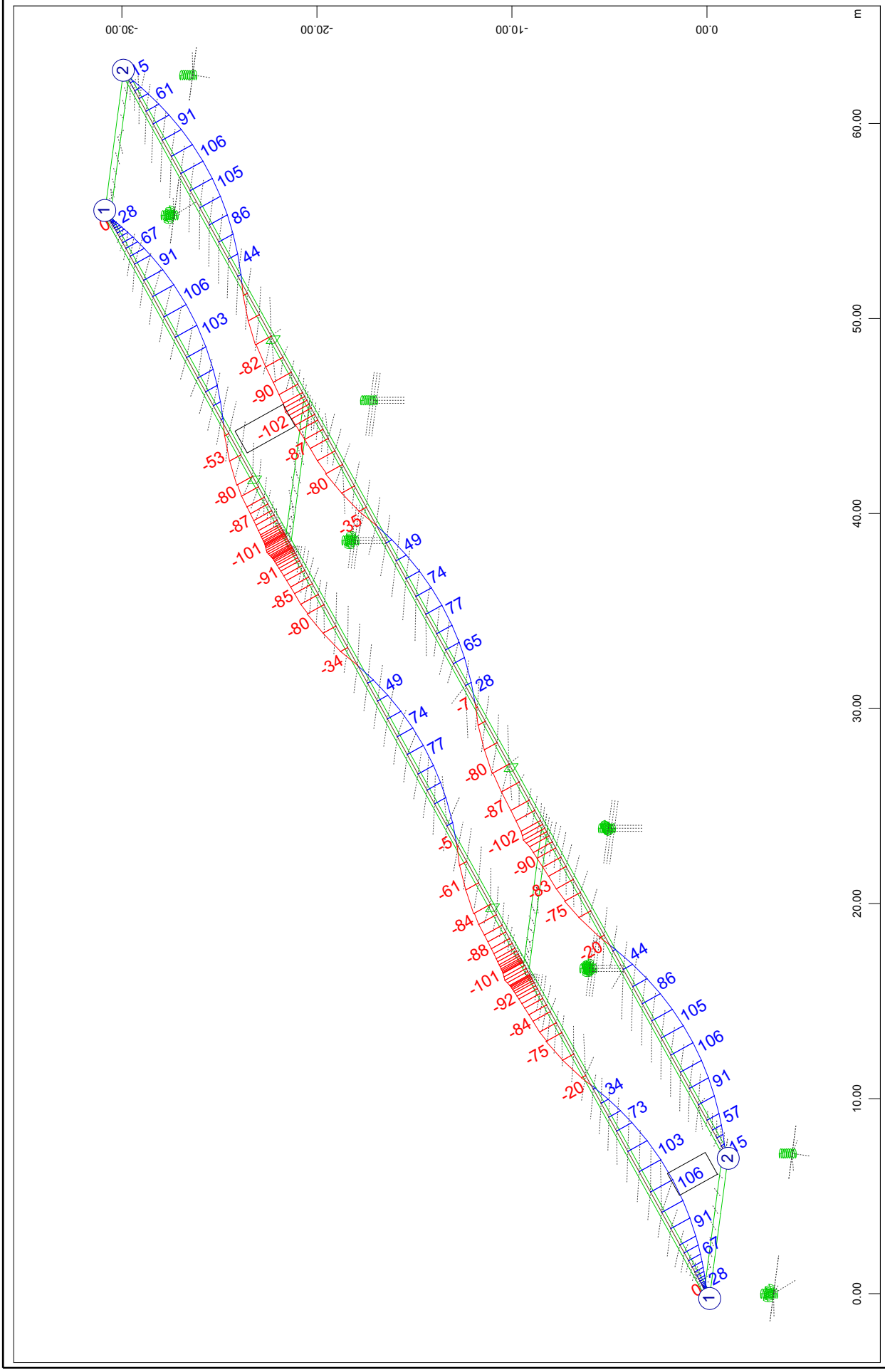

SOFiSTiK AG - www.sofistik.de

Composite bridge 38+50+38, b=14.25m, 2x2HL1100R HISTAR460 , slab 0.30m C30/37
Results for characteristic part-precombinations of loads: G_1

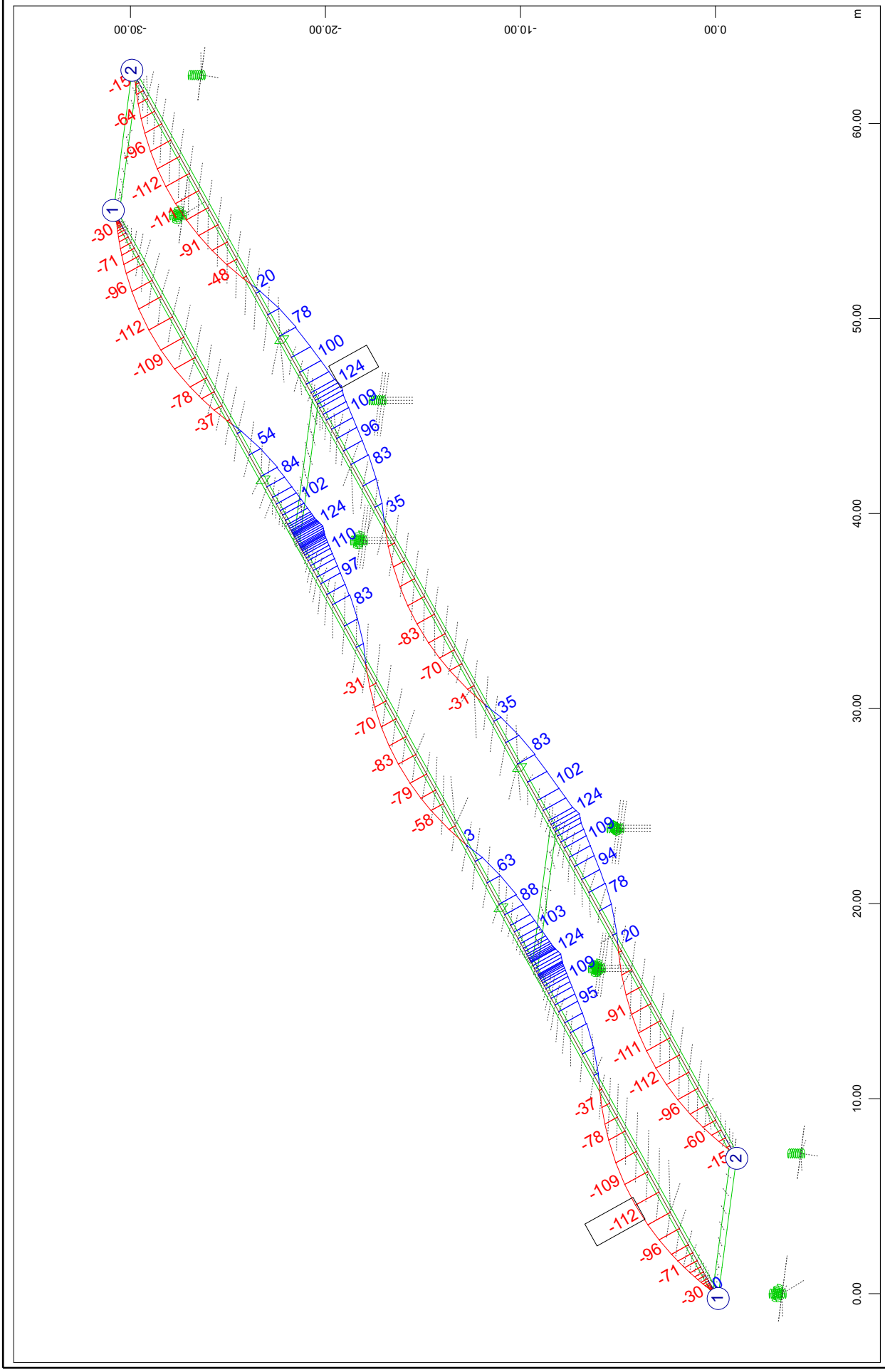

SOFiSTiK AG - www.sofistik.de

Composite bridge 38+50+38, b=14.25m, 2x2HL1100R HISTAR460 , slab 0.30m C30/37
Results for characteristic part-precombinations of loads: G_1

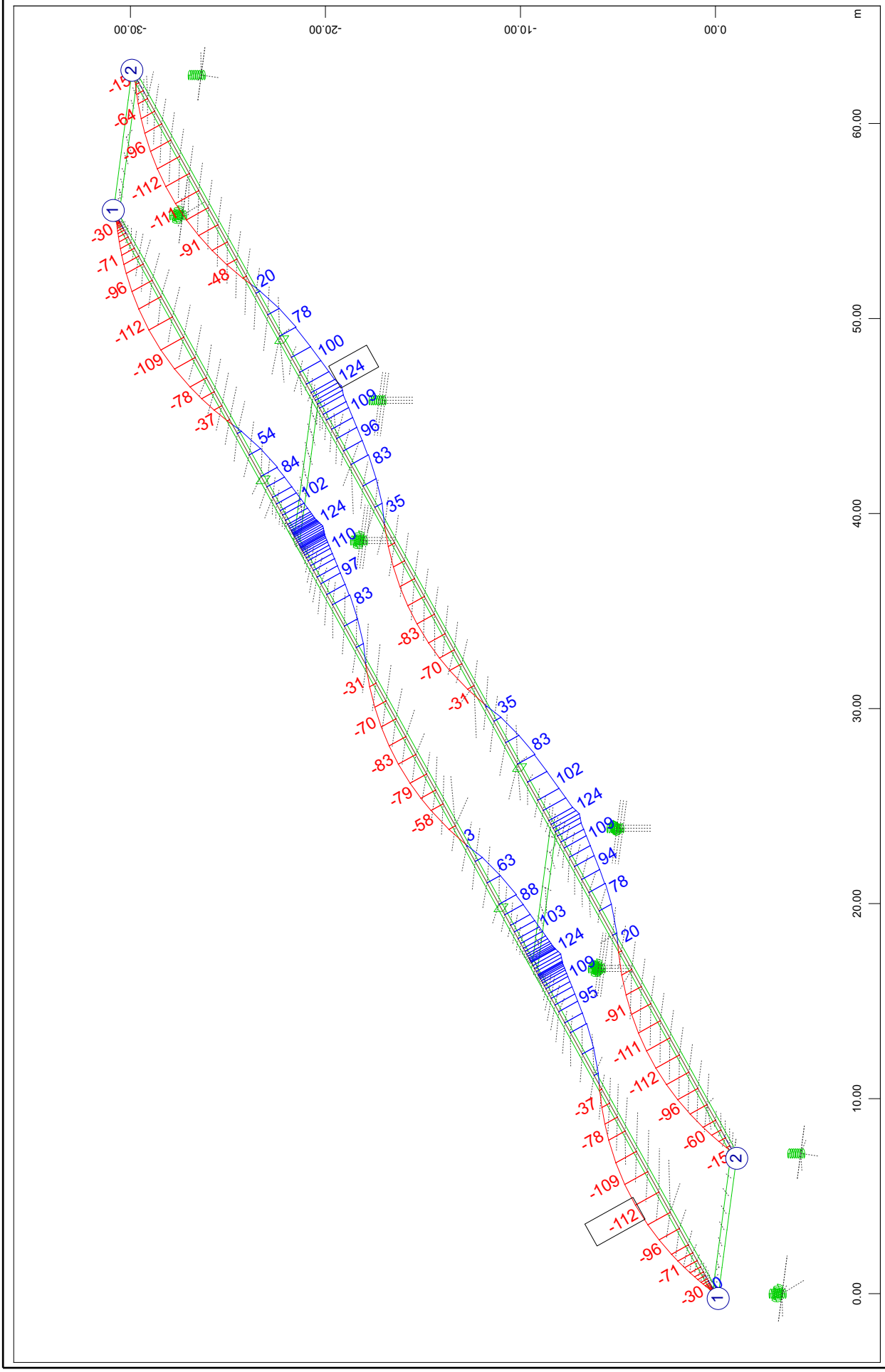

SOFiSTiK AG - www.sofistik.de

Composite bridge 38+50+38, b=14.25m, 2x2HL1100R HISTAR460 , slab 0.30m C30/37
Results for characteristic part-precombinations of loads: G_1

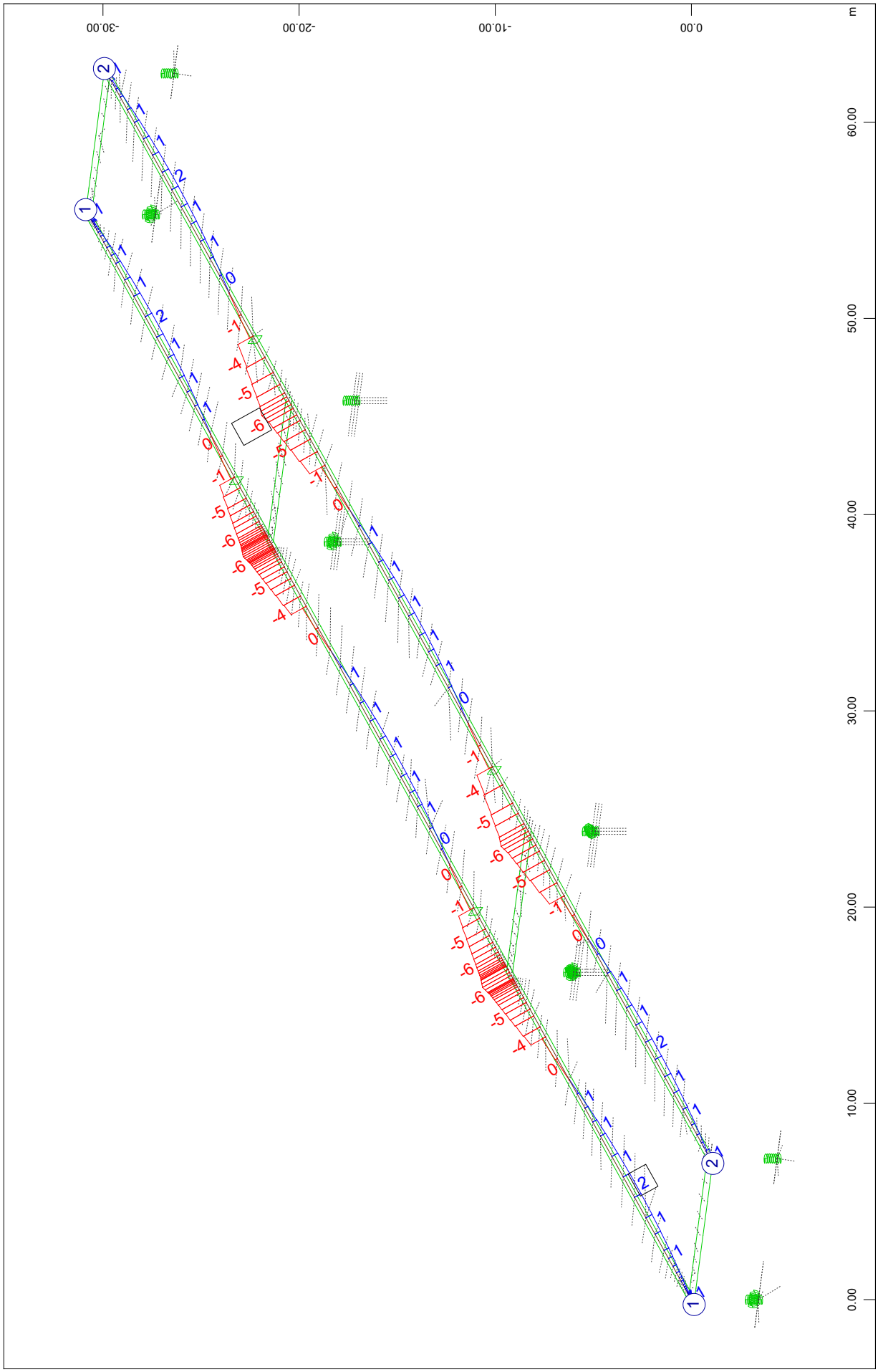

SOFiSTiK AG - www.sofistik.de

Composite bridge 38+50+38, b=14.25m, 2x2HL1100R HISTAR460 , slab 0.30m C30/37
Results for characteristic part-precombinations of loads: G_1

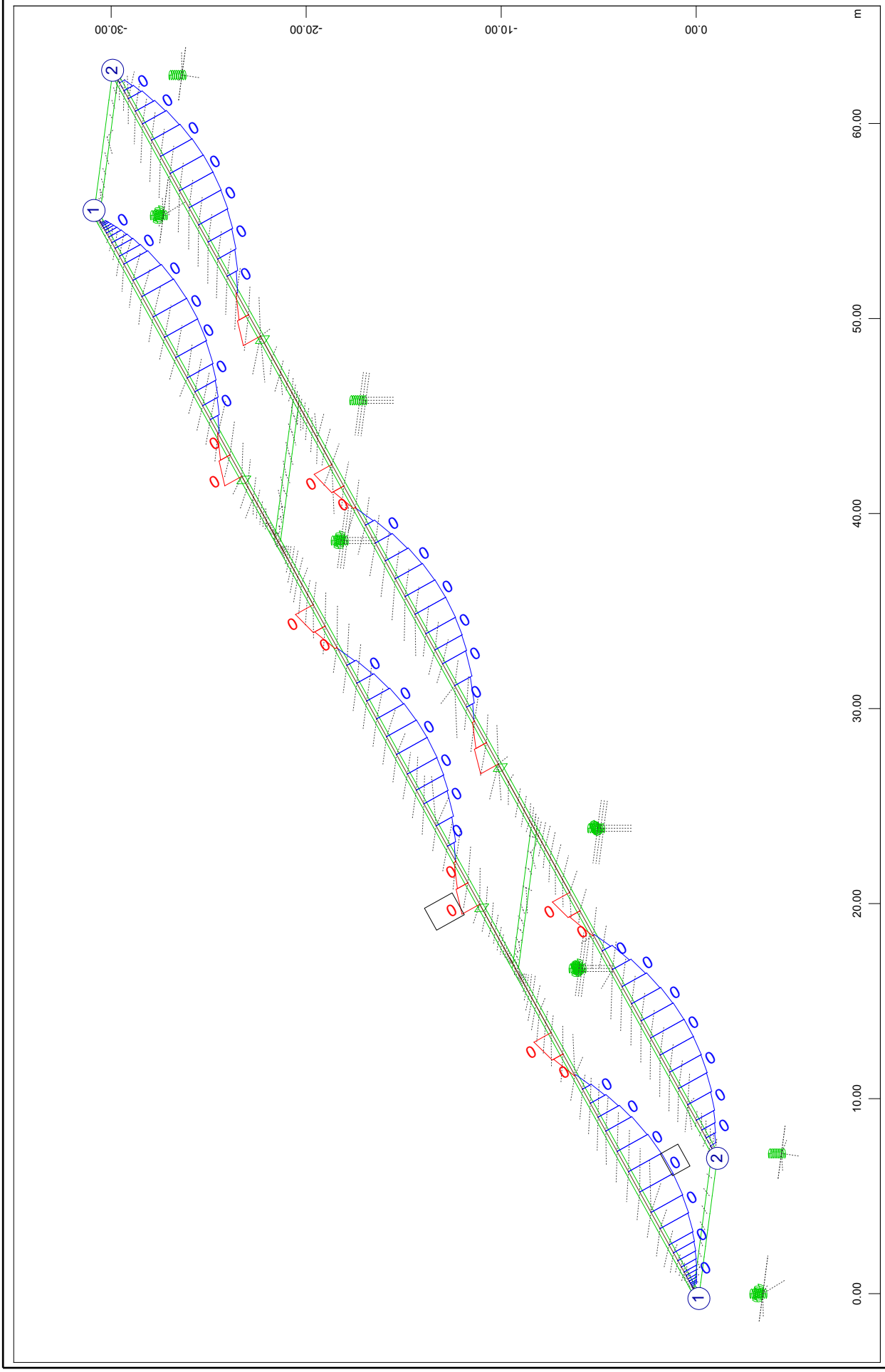

SOFiSTiK AG - www.sofistik.de

Composite bridge 38+50+38, b=14.25m, 2x2HL1100R HISTAR460 , slab 0.30m C30/37
Results for characteristic part-precombinations of loads: G_1

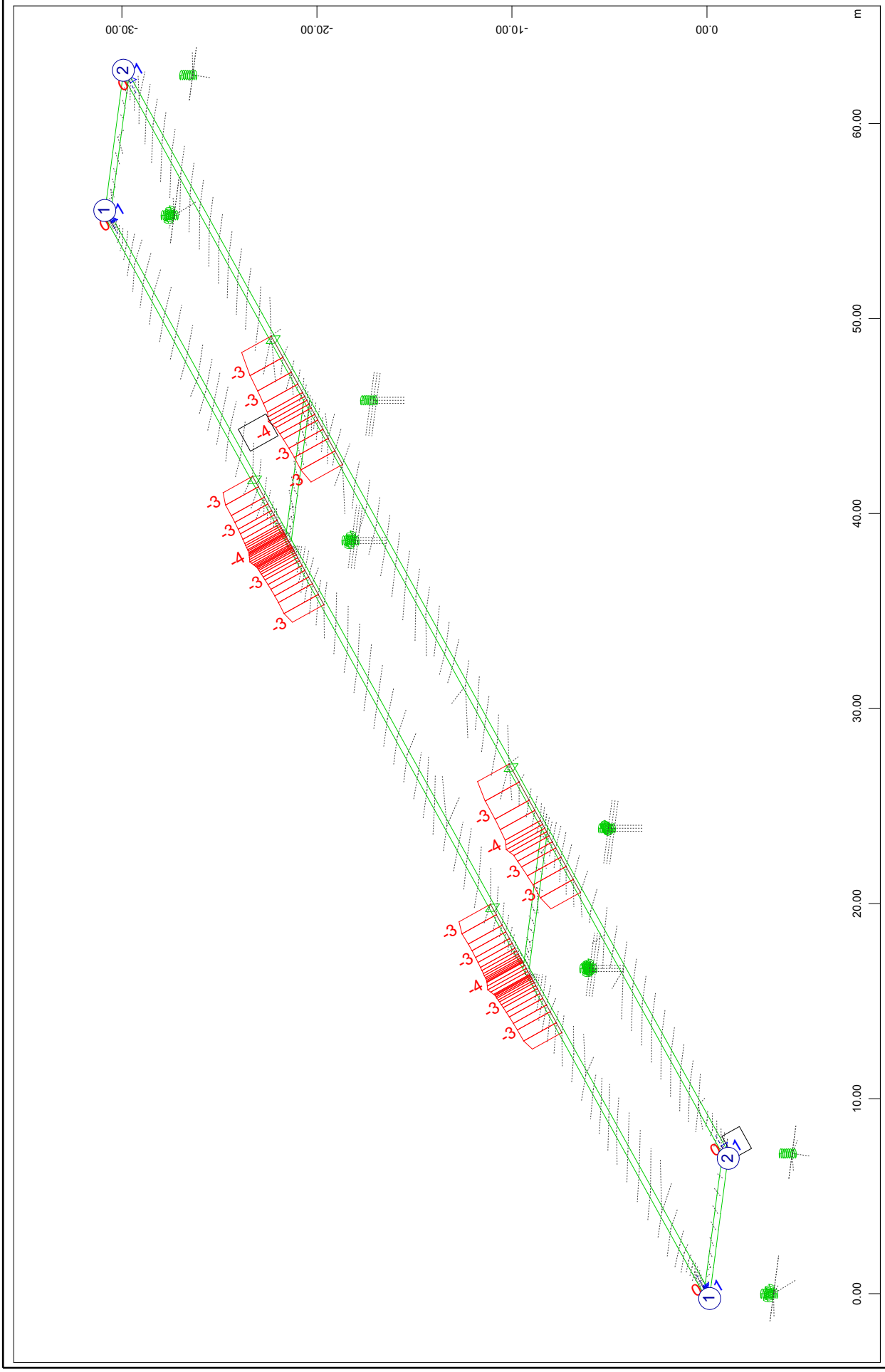

SOFiSTiK AG - www.sofistik.de

Composite bridge 38+50+38, b=14.25m, 2x2HL1100R HISTAR460 , slab 0.30m C30/37
Results for characteristic part-precombinations of loads: C_1

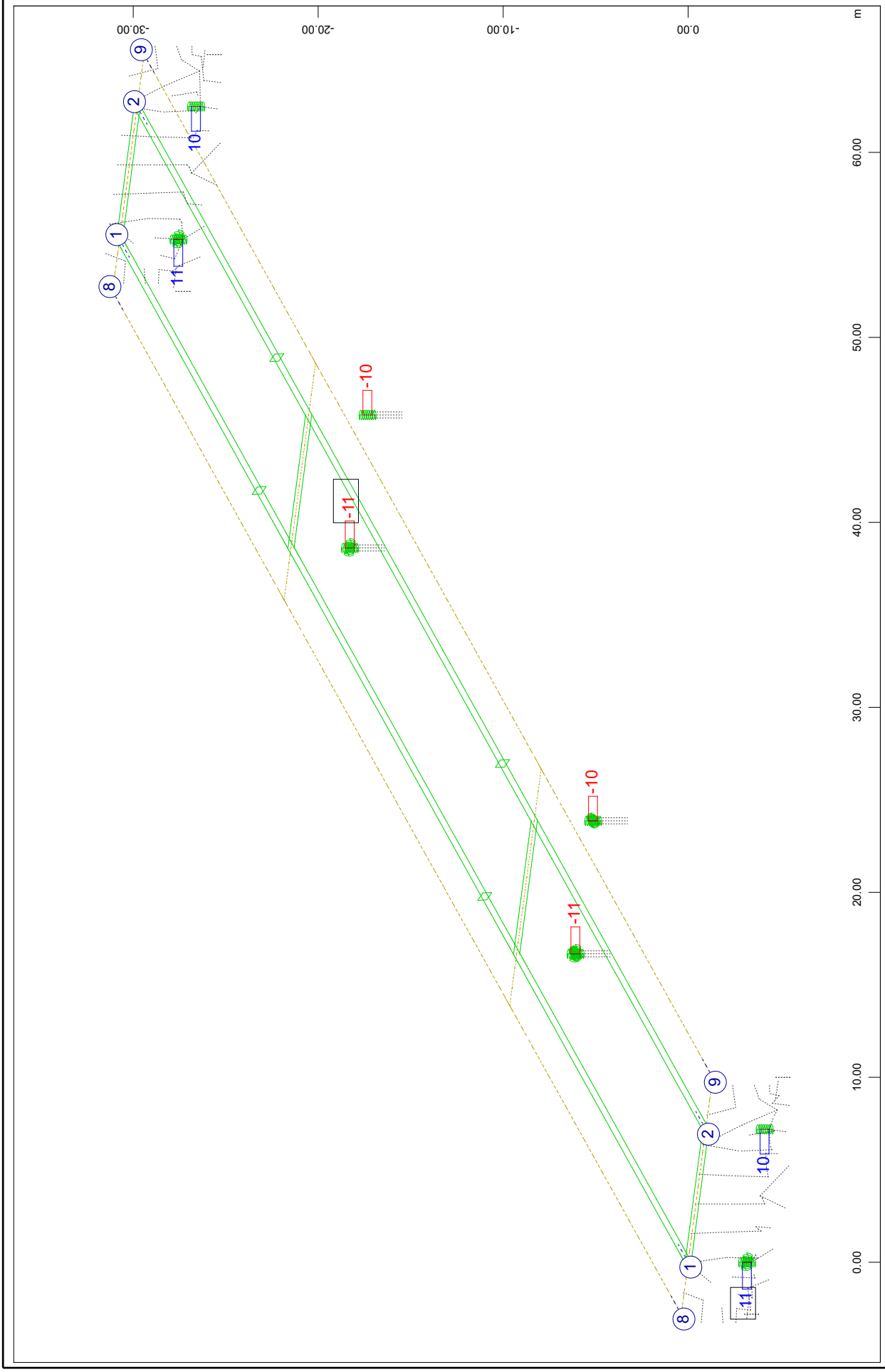

SOFiSTiK AG - www.sofistik.de

Composite bridge 38+50+38, b=14.25m, 2x2HL1100R HISTAR460 , slab 0.30m C30/37
Results for characteristic part-precombinations of loads: C_1

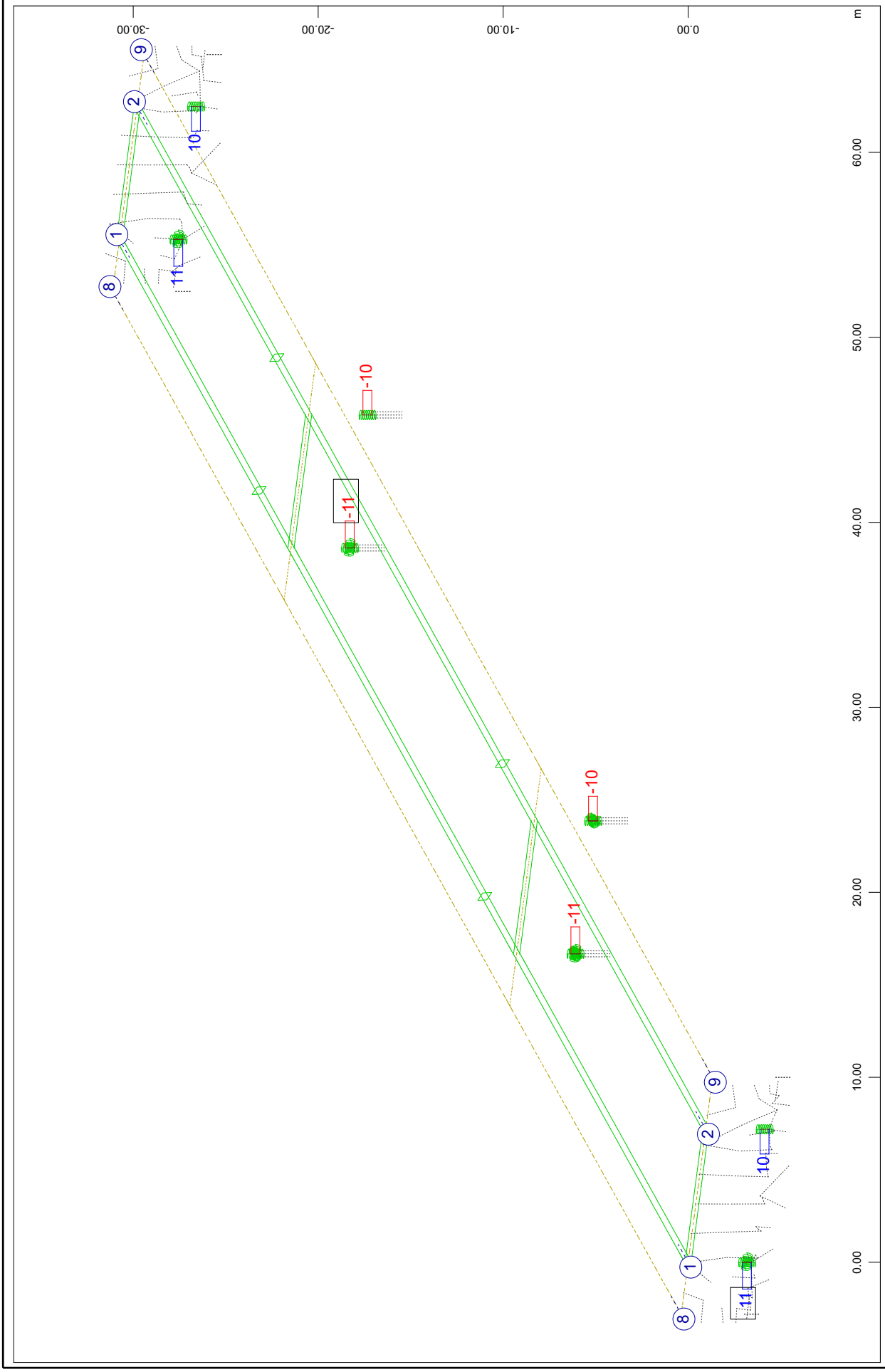

SOFiSTiK AG - www.sofistik.de

Composite bridge 38+50+38, b=14.25m, 2x2HL1100R HISTAR460 , slab 0.30m C30/37
Results for characteristic part-precombinations of loads: C_1

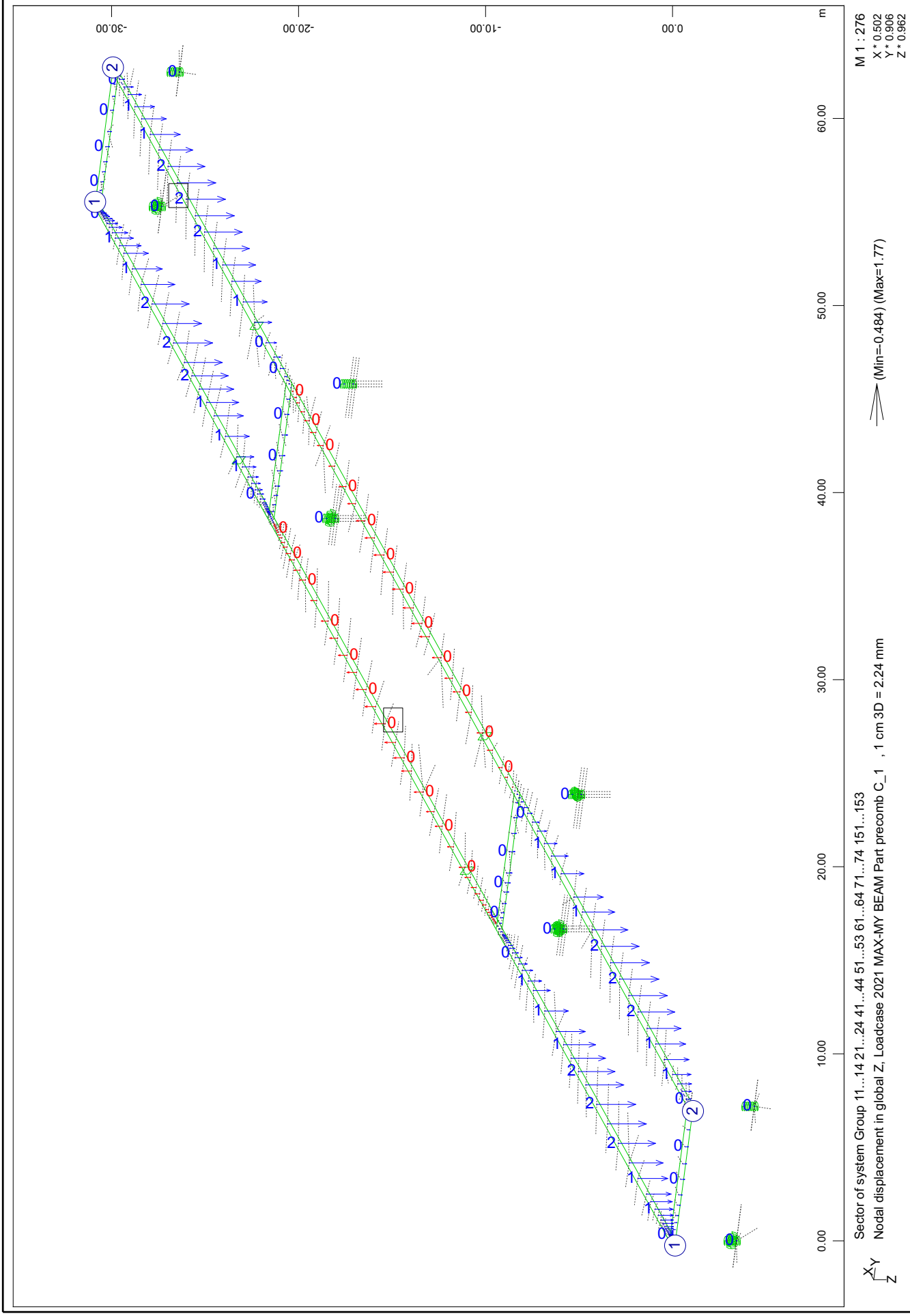

SOFiSTiK AG - www.sofistik.de

Composite bridge 38+50+38, b=14.25m, 2x2HL1100R HISTAR460 , slab 0.30m C30/37
Results for characteristic part-precombinations of loads: C_1

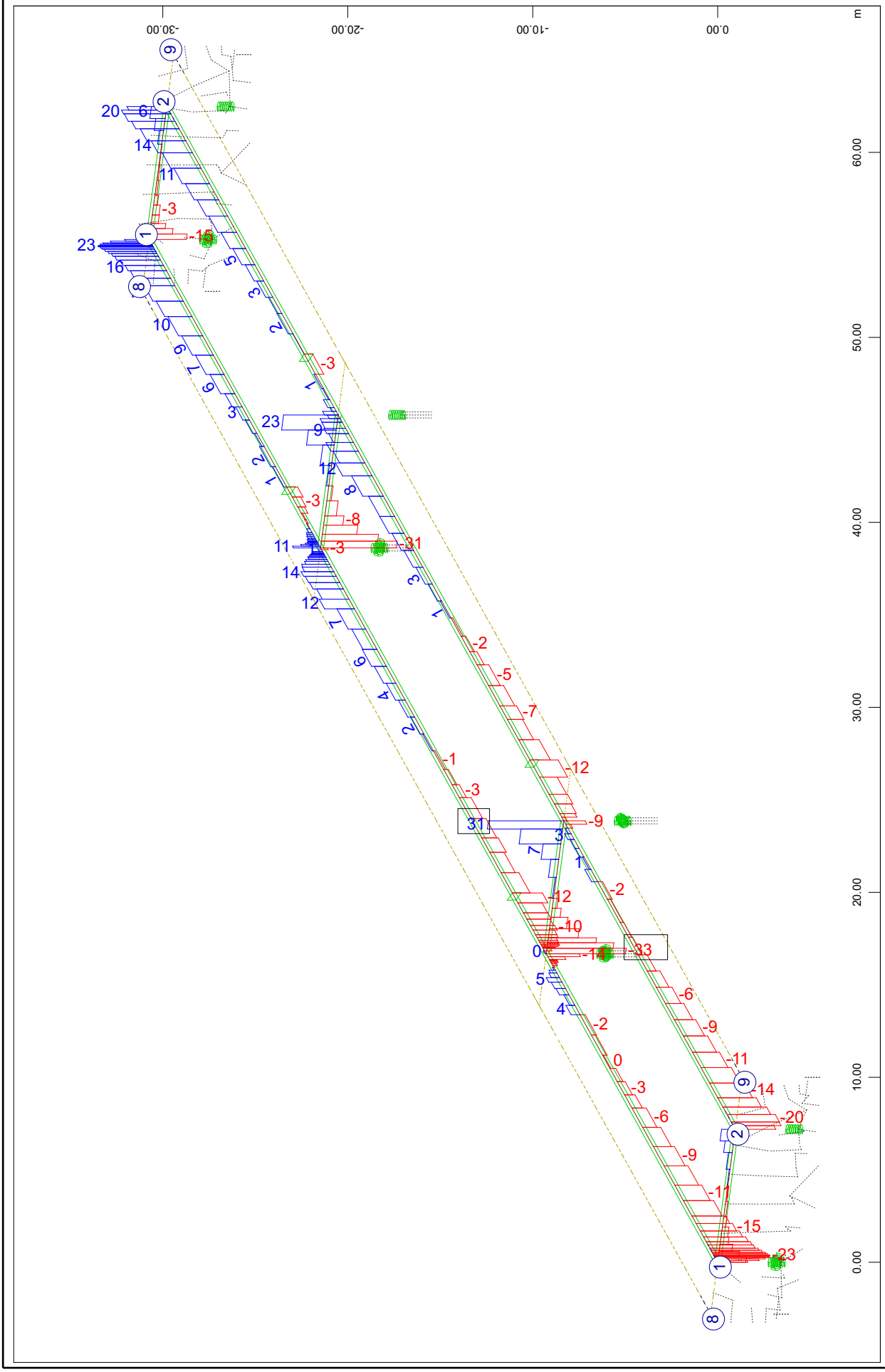

SOFiSTiK AG - www.sofistik.de

Composite bridge 38+50+38, b=14.25m, 2x2HL1100R HISTAR460 , slab 0.30m C30/37
Results for characteristic part-precombinations of loads: C_1

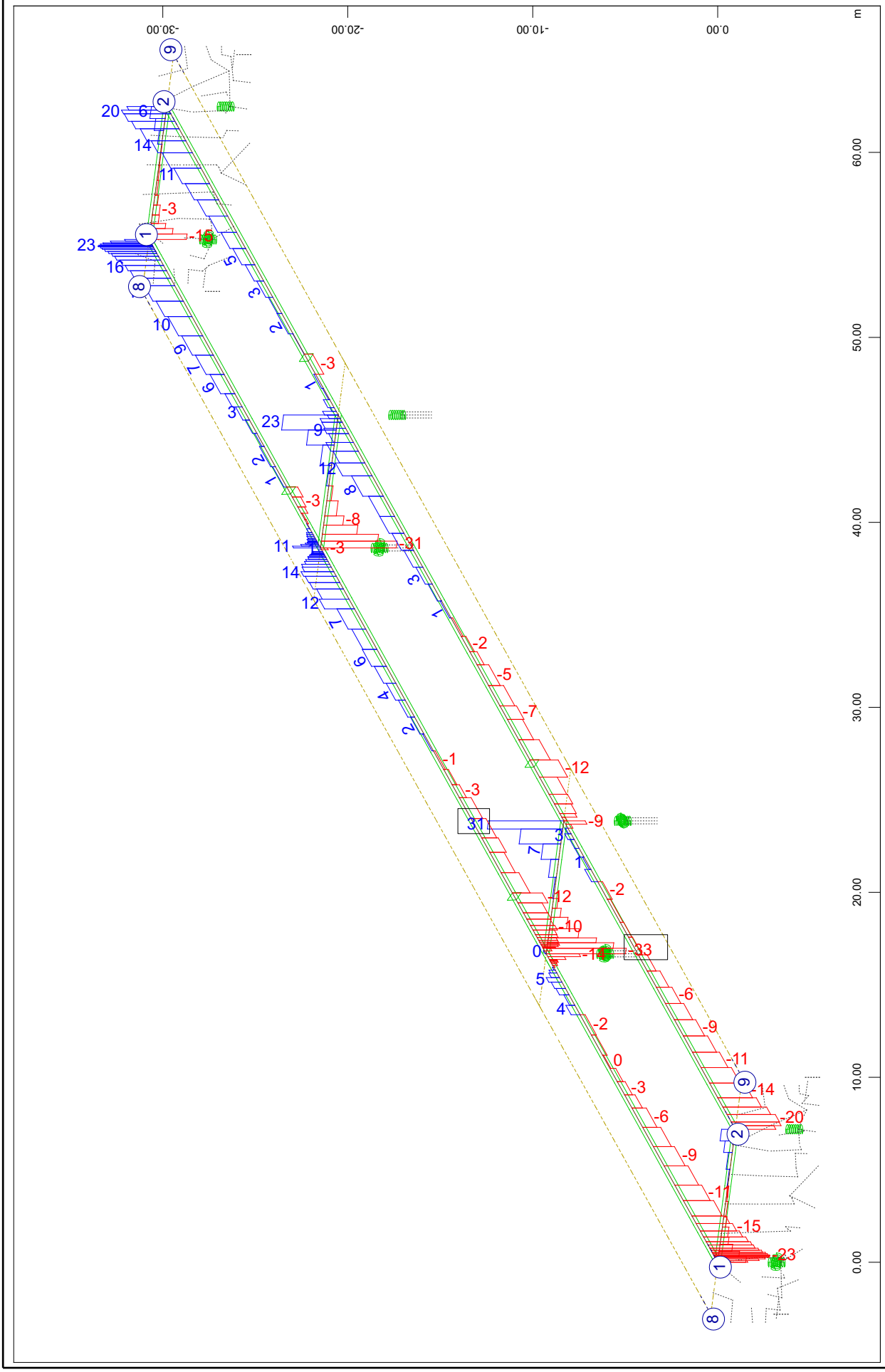

SOFiSTiK AG - www.sofistik.de

Composite bridge 38+50+38, b=14.25m, 2x2HL1100R HISTAR460 , slab 0.30m C30/37
Results for characteristic part-precombinations of loads: C_1

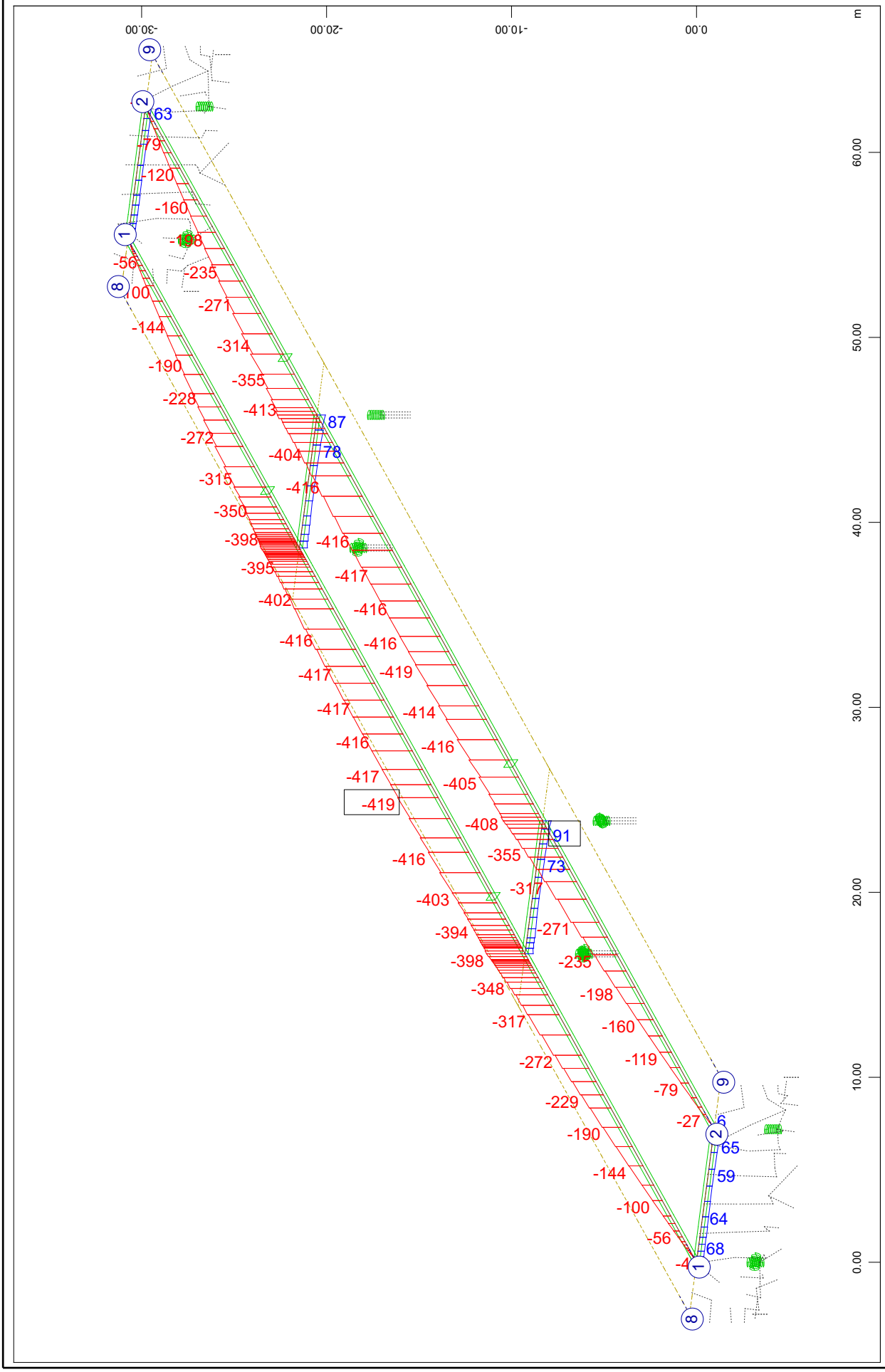

Composite bridge 38+50+38, b=14.25m, 2x2HL1100R HISTAR460 , slab 0.30m C30/37
Results for characteristic part-precombinations of loads: C_1

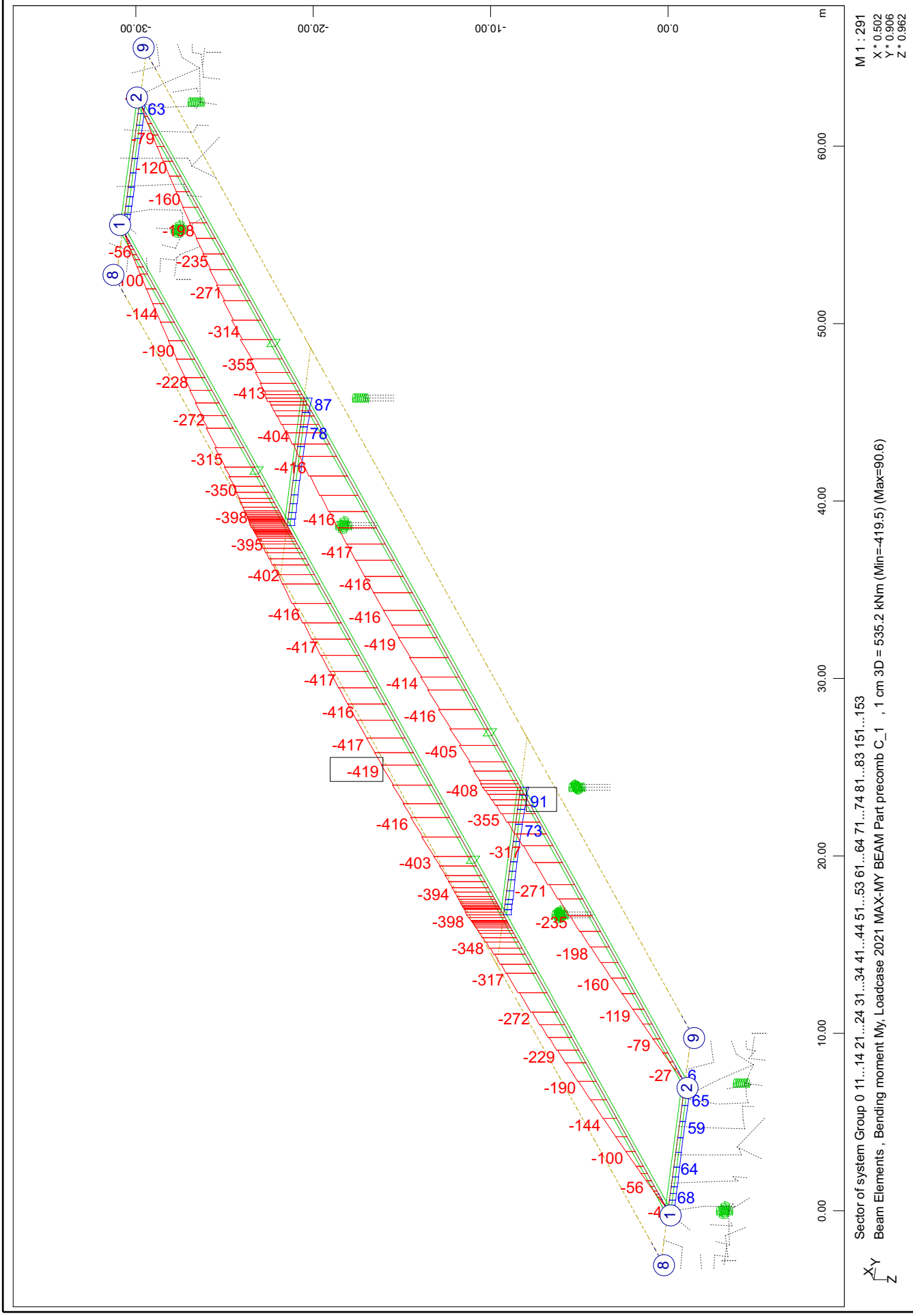

Composite bridge 38+50+38, b=14.25m, 2x2HL1100R HISTAR460 , slab 0.30m C30/37
Results for characteristic part-precombinations of loads: C_1

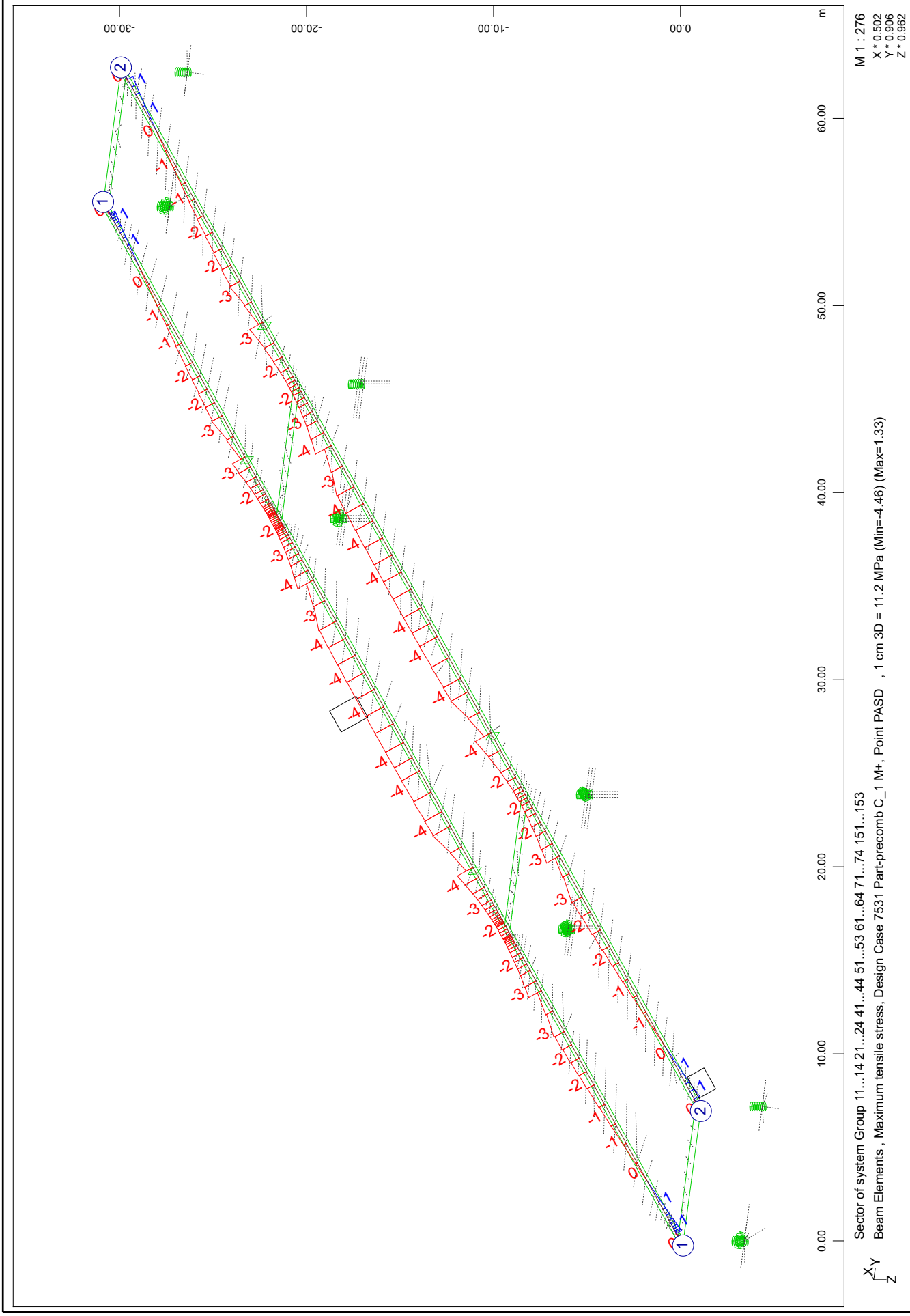

SOFiSTiK AG - www.sofistik.de

Composite bridge 38+50+38, b=14.25m, 2x2HL1100R HISTAR460 , slab 0.30m C30/37
Results for characteristic part-precombinations of loads: C_1

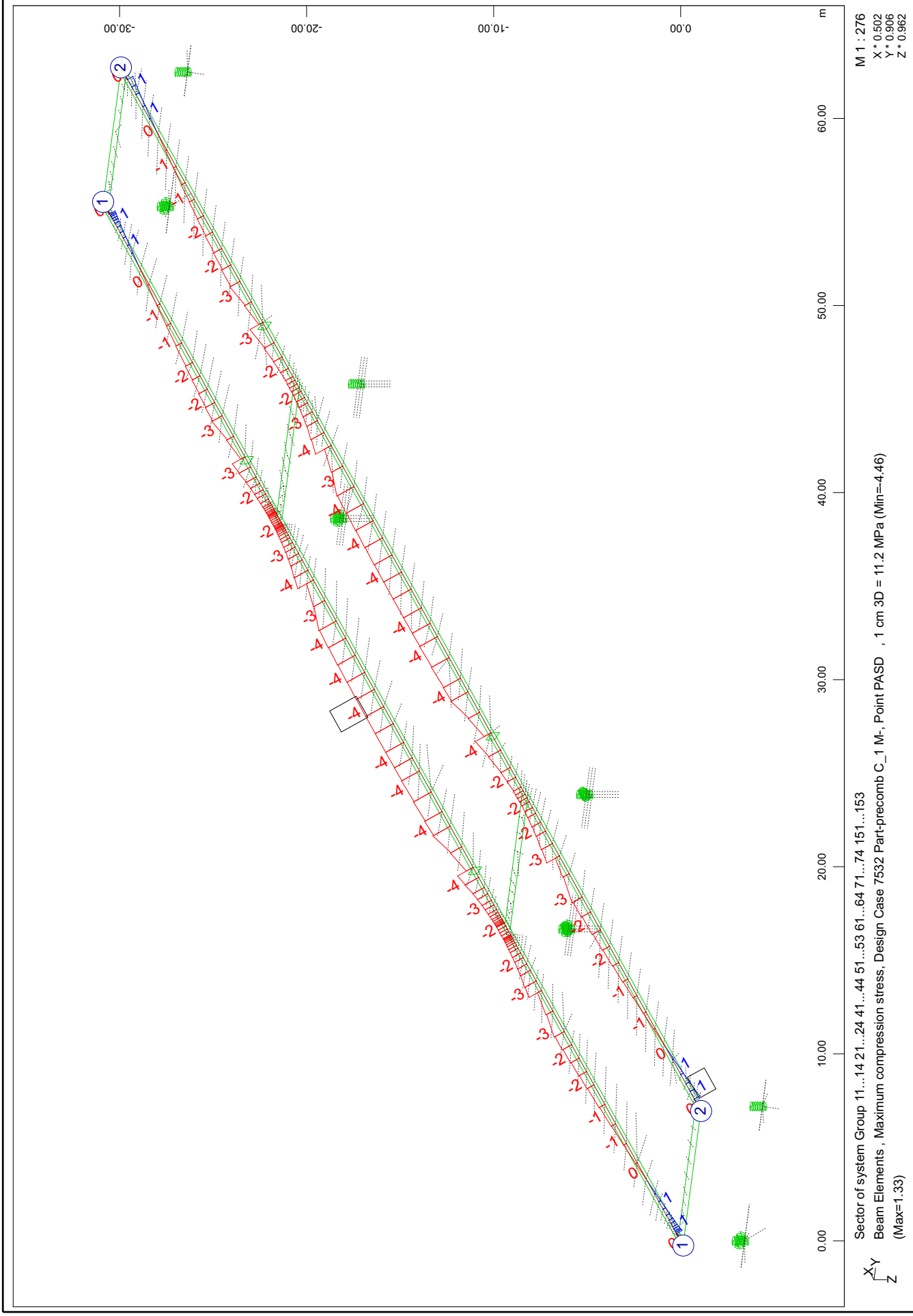

SOFiSTiK AG - www.sofistik.de

Composite bridge 38+50+38, b=14.25m, 2x2HL1100R HISTAR460 , slab 0.30m C30/37
Results for characteristic part-precombinations of loads: C_1

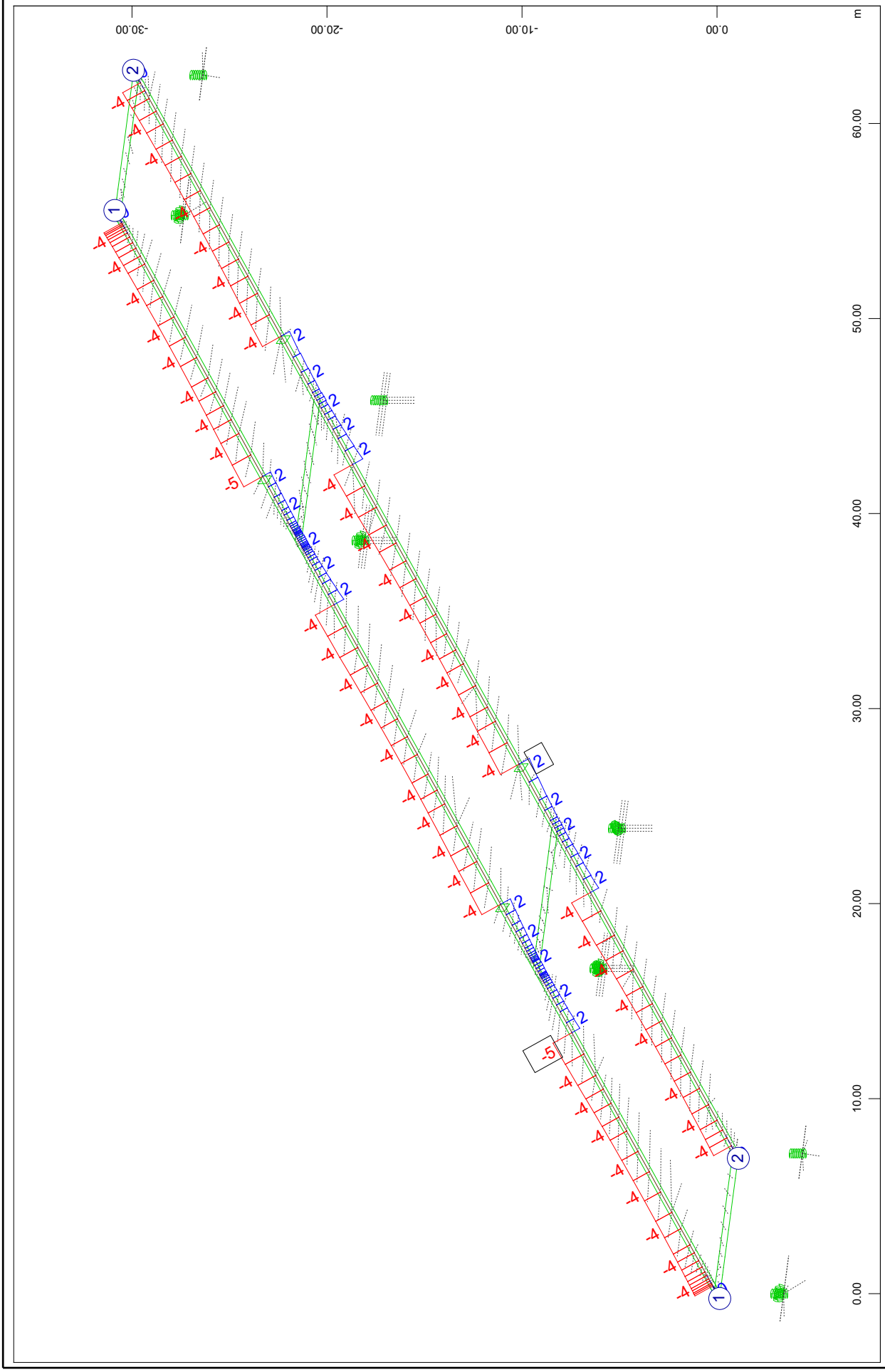

SOFiSTiK AG - www.sofistik.de

Composite bridge 38+50+38, b=14.25m, 2x2HL1100R HISTAR460 , slab 0.30m C30/37
Results for characteristic part-precombinations of loads: C_1

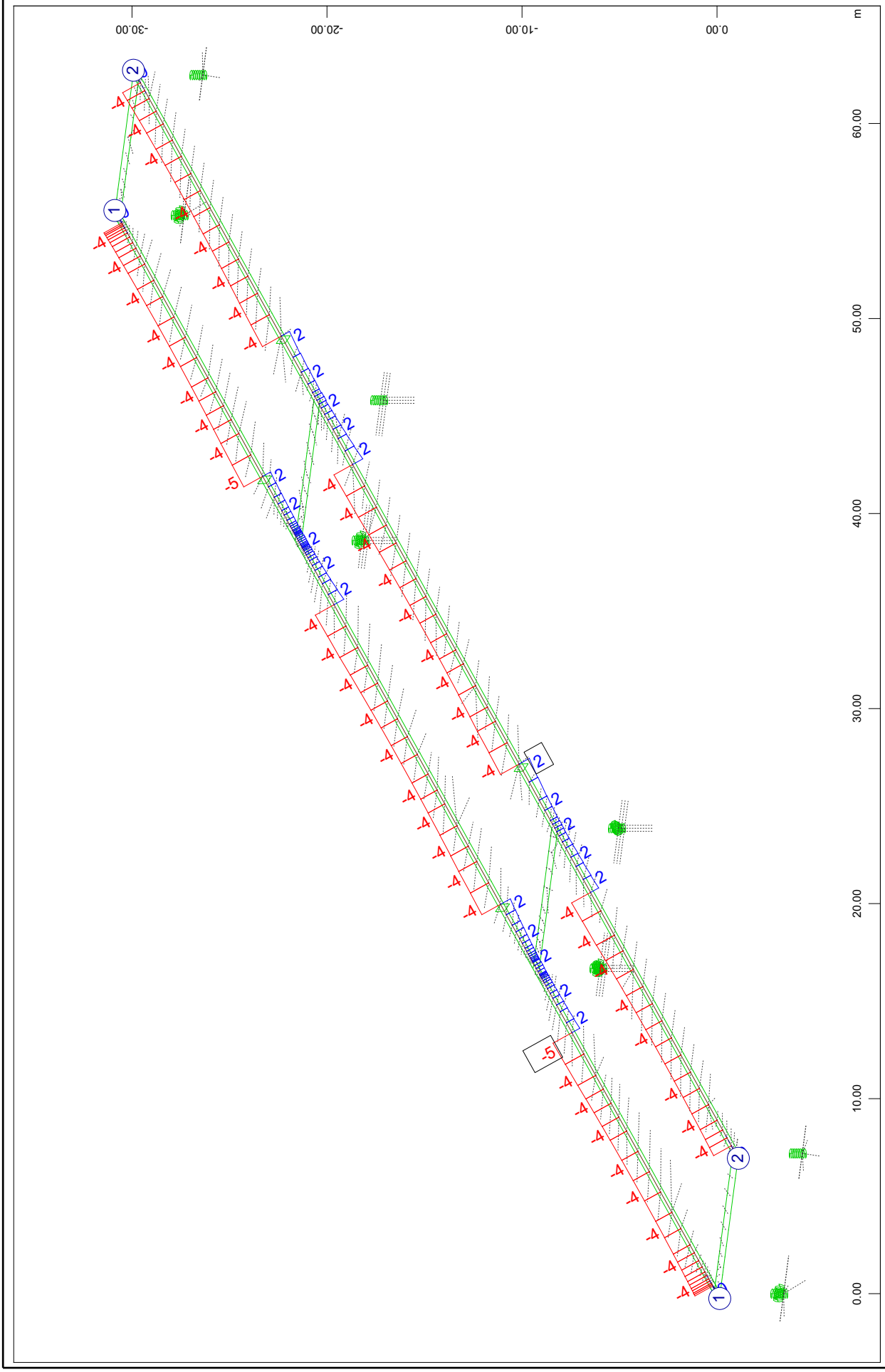

SOFiSTiK AG - www.sofistik.de

Composite bridge 38+50+38, b=14.25m, 2x2HL1100R HISTAR460 , slab 0.30m C30/37
Results for characteristic part-precombinations of loads: C_1

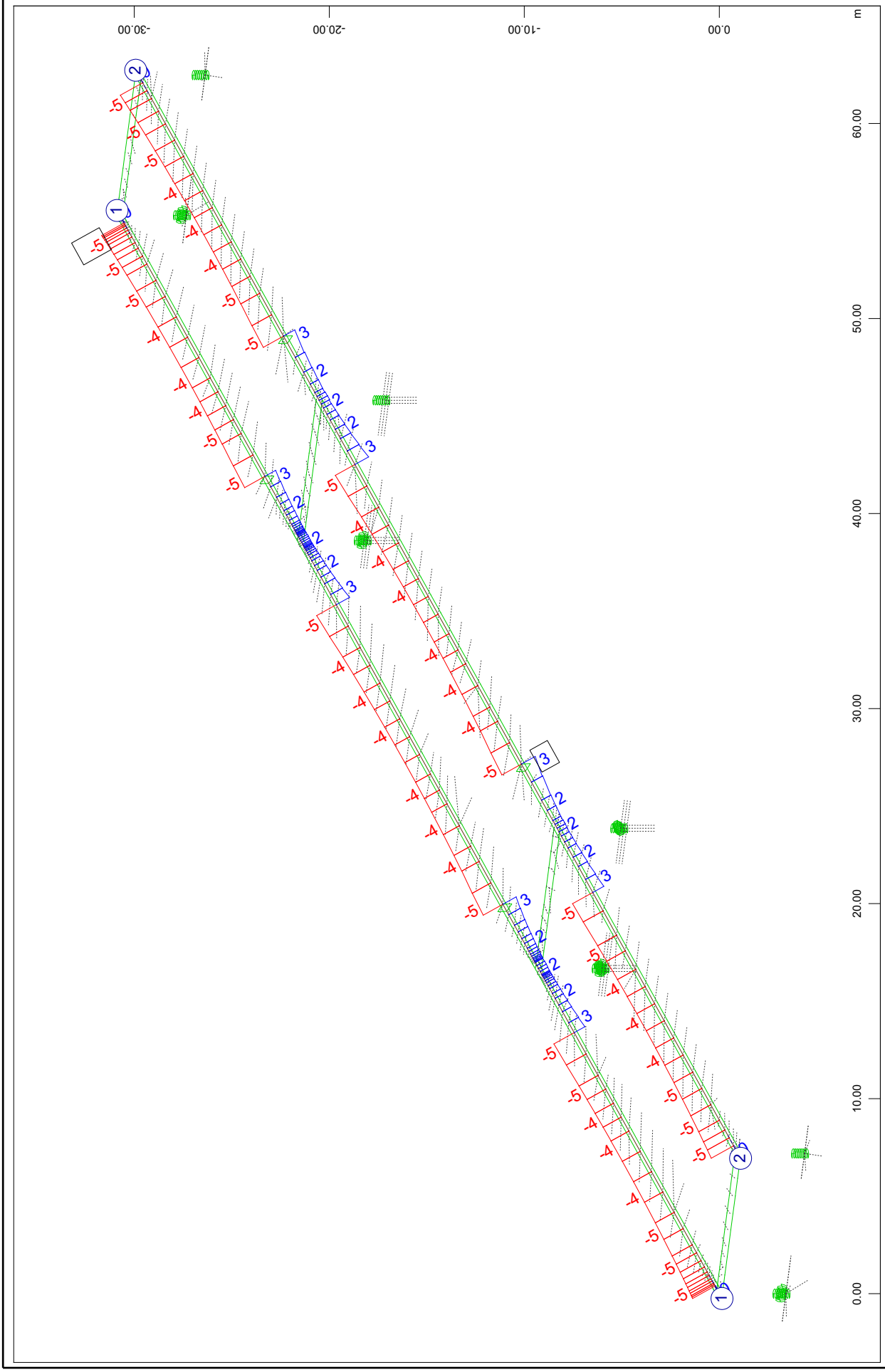

SOFiSTiK AG - www.sofistik.de

Composite bridge 38+50+38, b=14.25m, 2x2HL1100R HISTAR460 , slab 0.30m C30/37
Results for characteristic part-precombinations of loads: C_1

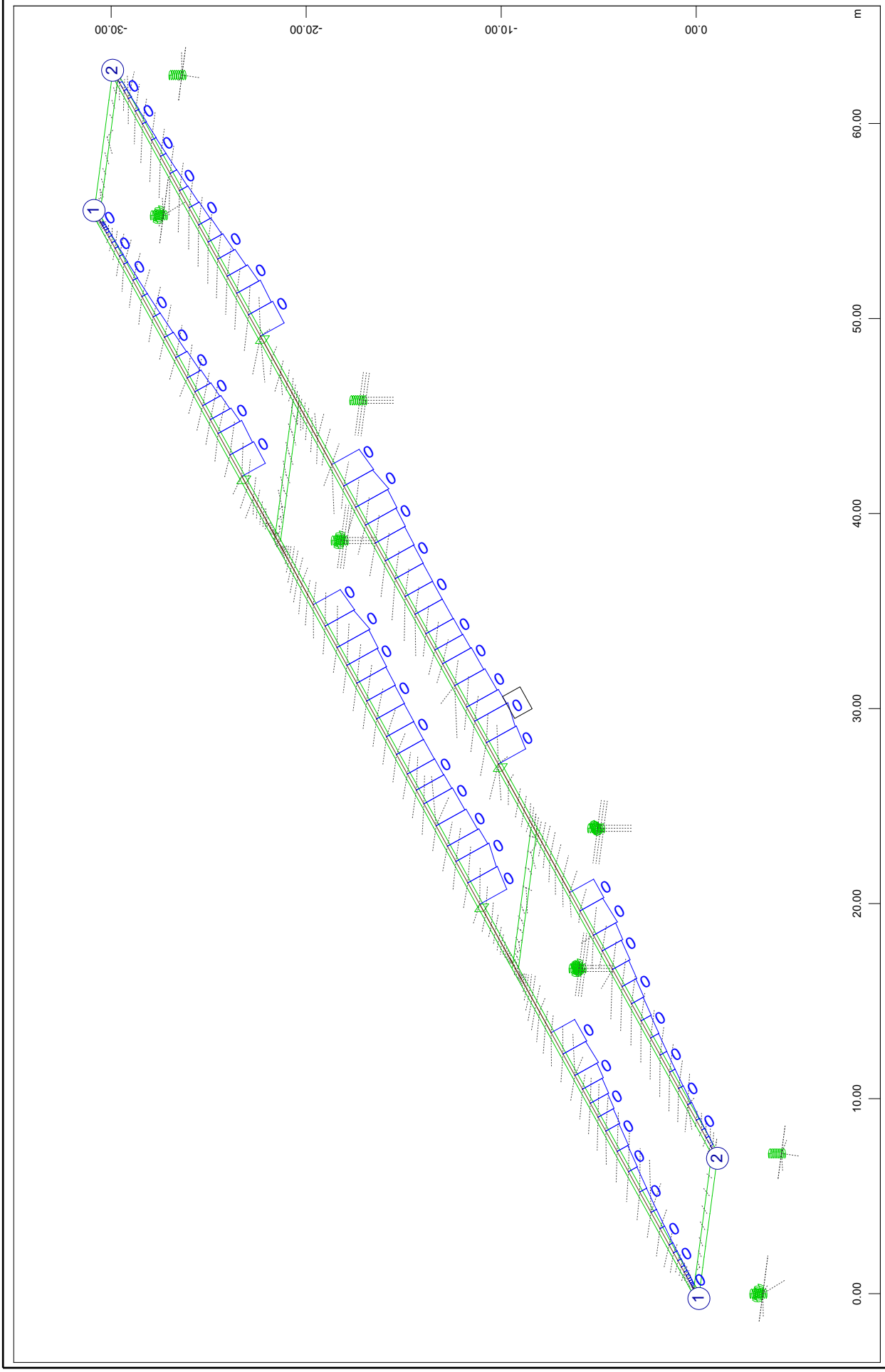

SOFiSTiK AG - www.sofistik.de

Composite bridge 38+50+38, b=14.25m, 2x2HL1100R HISTAR460 , slab 0.30m C30/37
Results for characteristic part-precombinations of loads: C_1

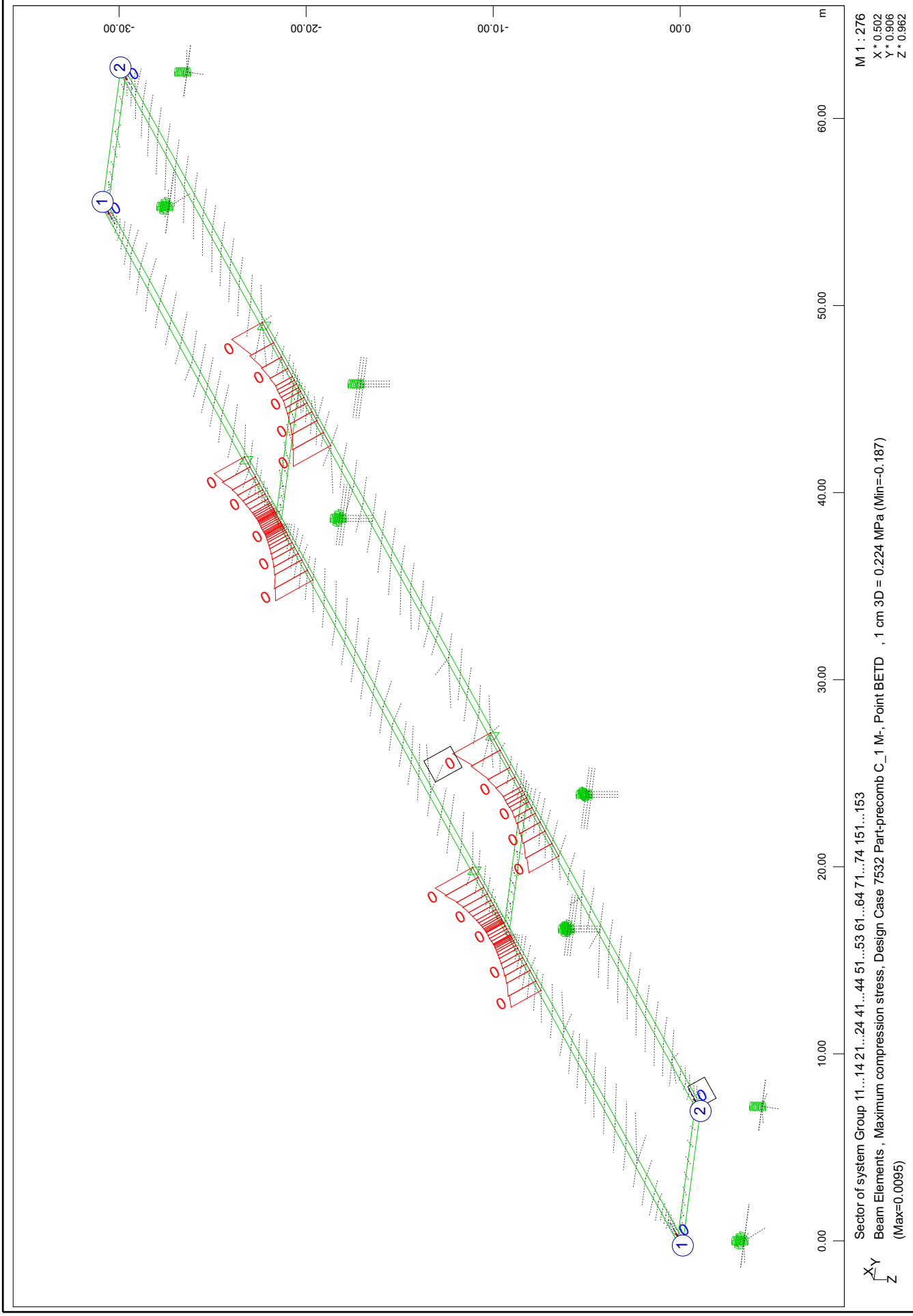

SOFiSTiK AG - www.sofistik.de

Composite bridge 38+50+38, b=14.25m, 2x2HL1100R HISTAR460 , slab 0.30m C30/37
Results for characteristic part-precombinations of loads: G_2

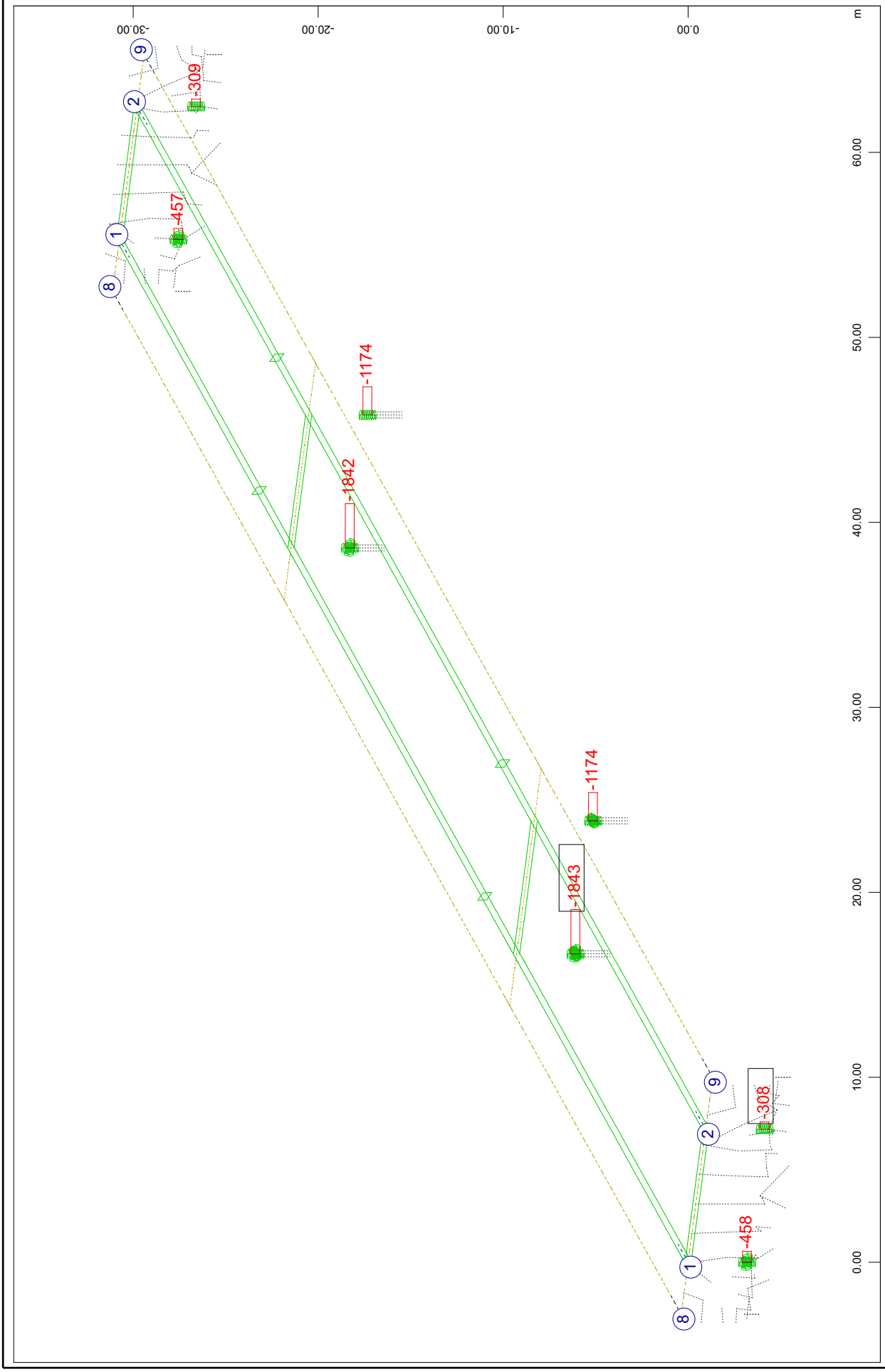

SOFiSTiK AG - www.sofistik.de

Composite bridge 38+50+38, b=14.25m, 2x2HL1100R HISTAR460 , slab 0.30m C30/37
Results for characteristic part-precombinations of loads: G_2

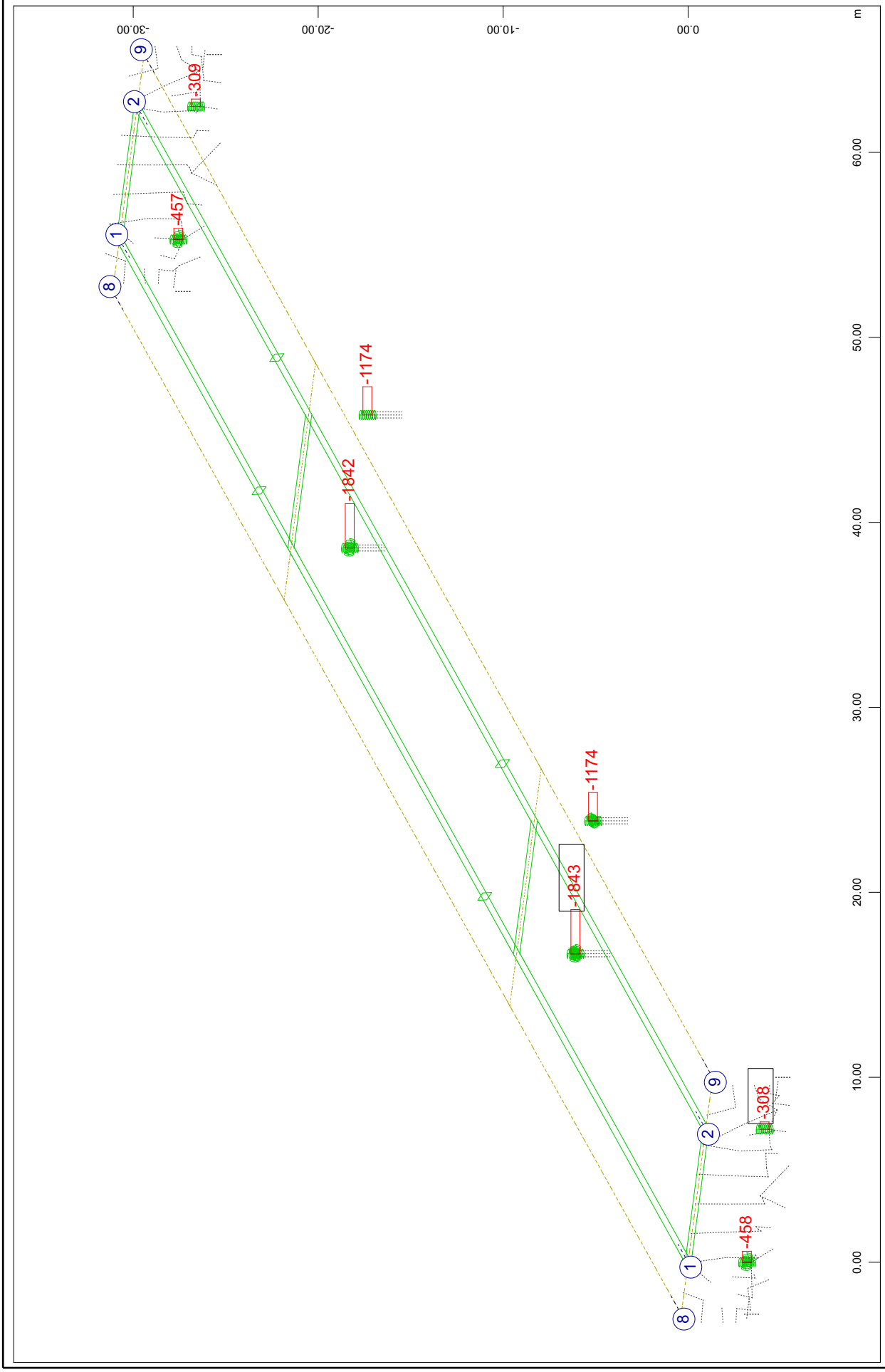

SOFiSTiK AG - www.sofistik.de

Composite bridge 38+50+38, b=14.25m, 2x2HL1100R HISTAR460 , slab 0.30m C30/37
Results for characteristic part-precombinations of loads: G_2

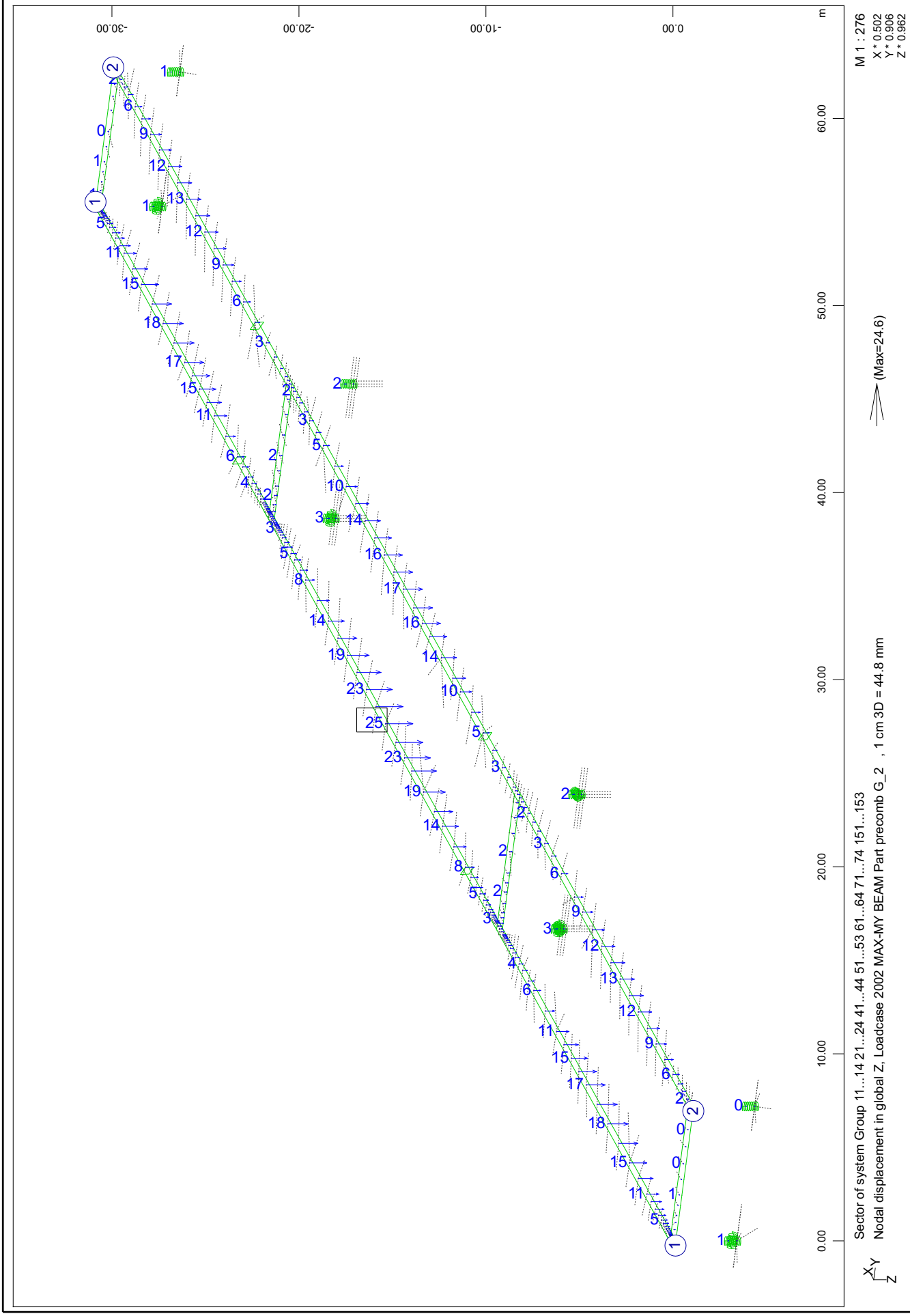

SOFiSTiK AG - www.sofistik.de

Composite bridge 38+50+38, b=14.25m, 2x2HL1100R HISTAR460 , slab 0.30m C30/37
Results for characteristic part-precombinations of loads: G_2

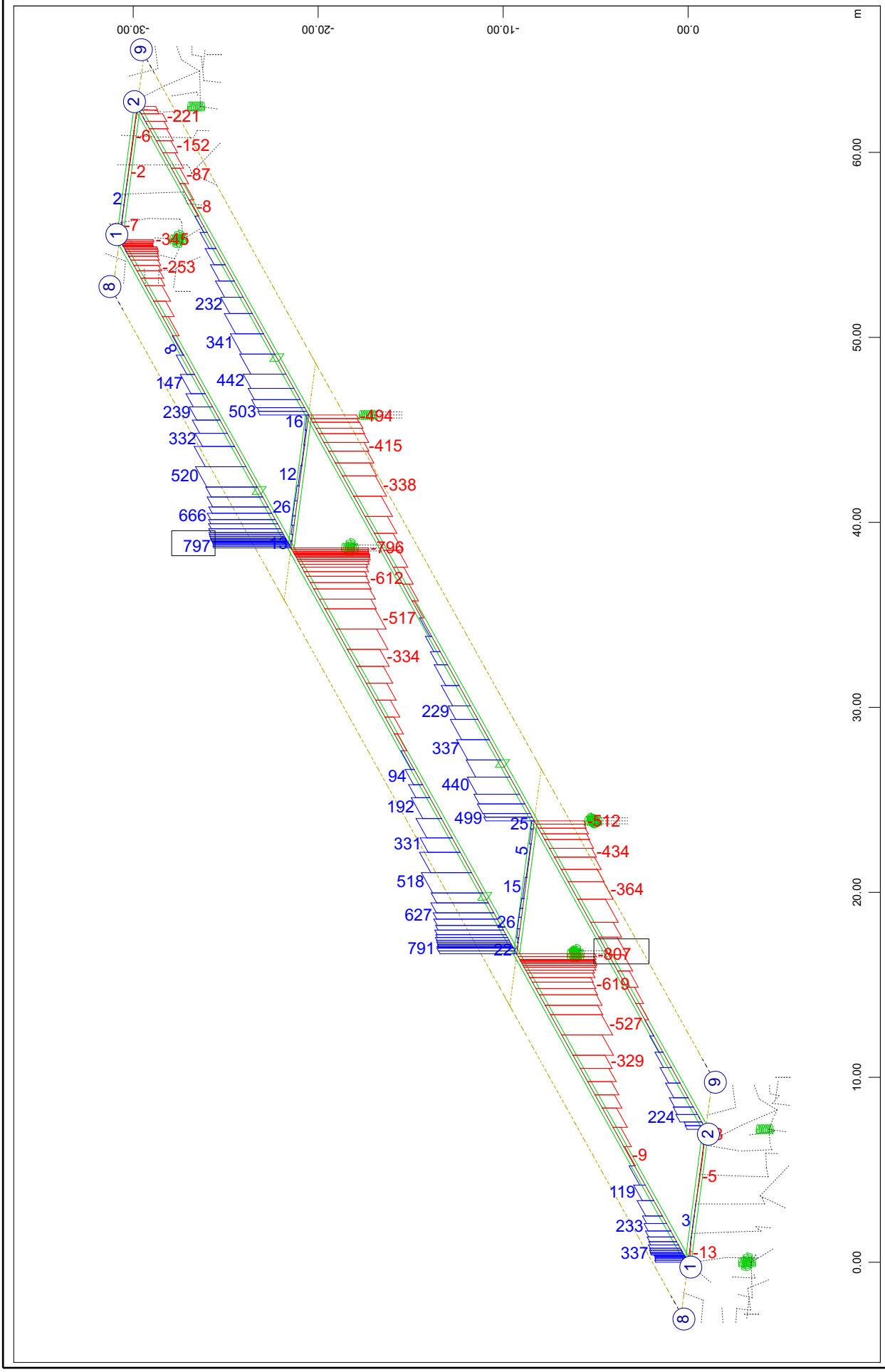

SOFiSTiK AG - www.sofistik.de

Composite bridge 38+50+38, b=14.25m, 2x2HL1100R HISTAR460 , slab 0.30m C30/37
Results for characteristic part-precombinations of loads: G_2

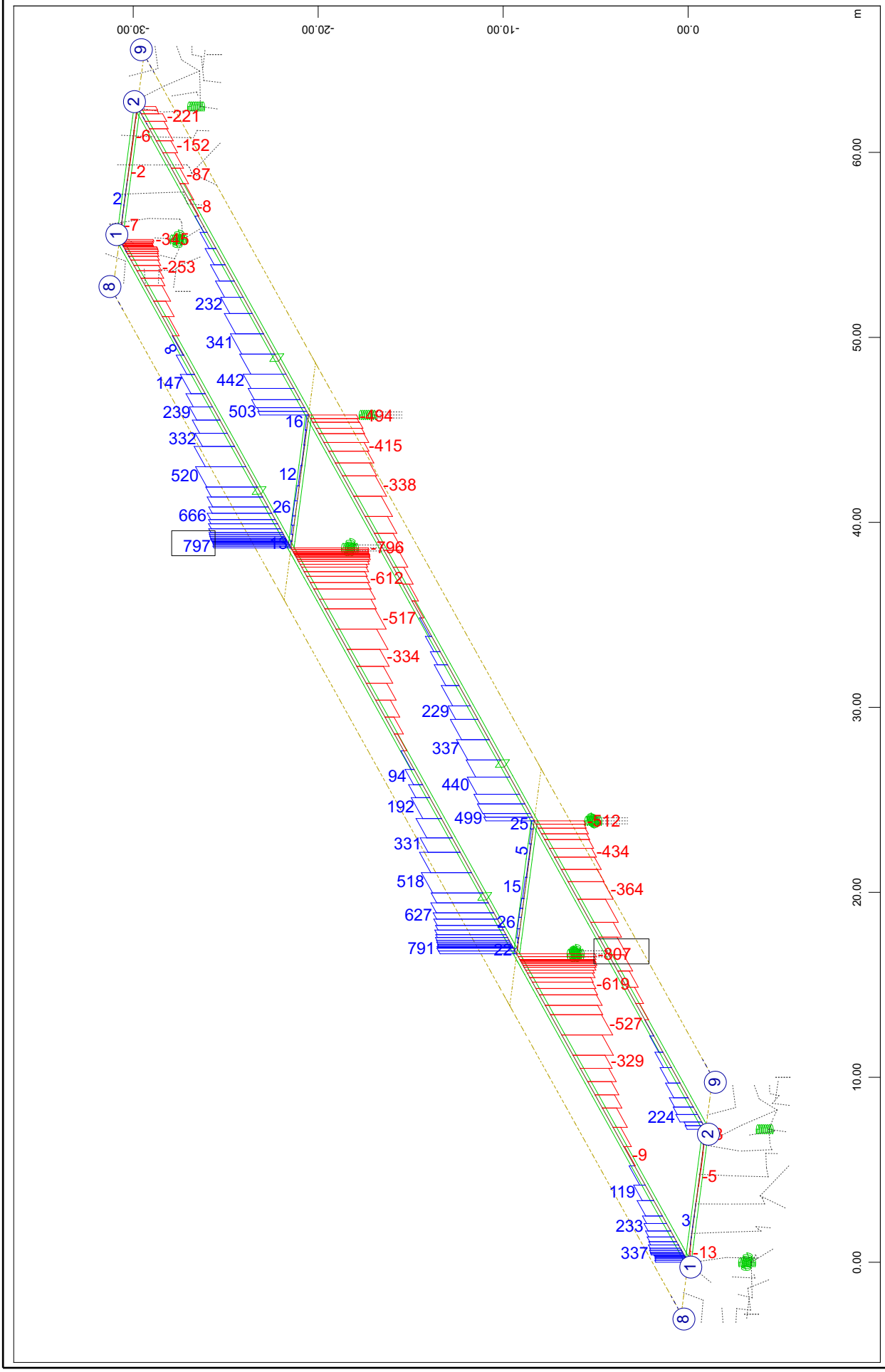

Composite bridge 38+50+38, b=14.25m, 2x2HL1100R HISTAR460 , slab 0.30m C30/37
Results for characteristic part-precombinations of loads: G_2

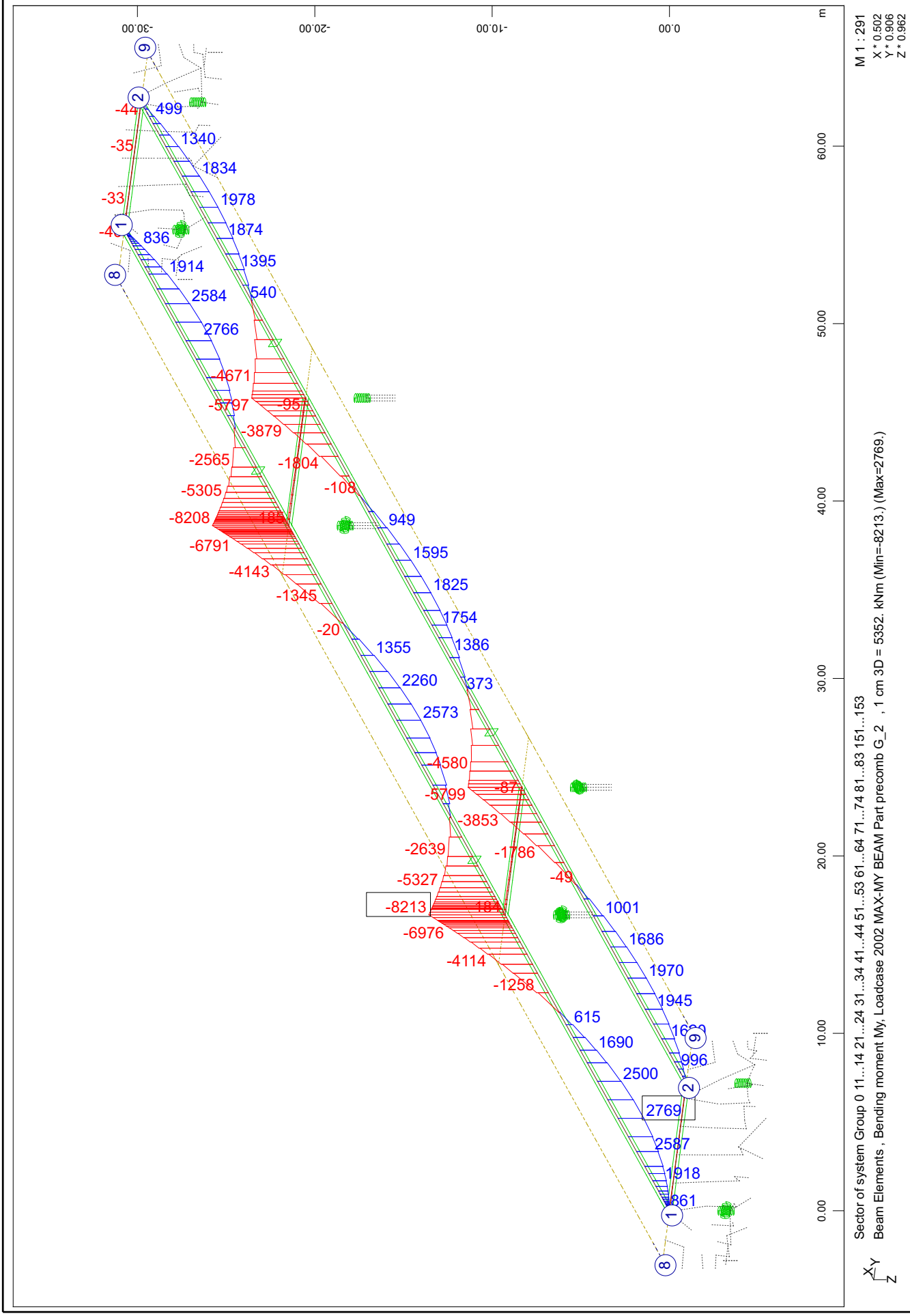

Composite bridge 38+50+38, b=14.25m, 2x2HL1100R HISTAR460 , slab 0.30m C30/37
Results for characteristic part-precombinations of loads: G_2

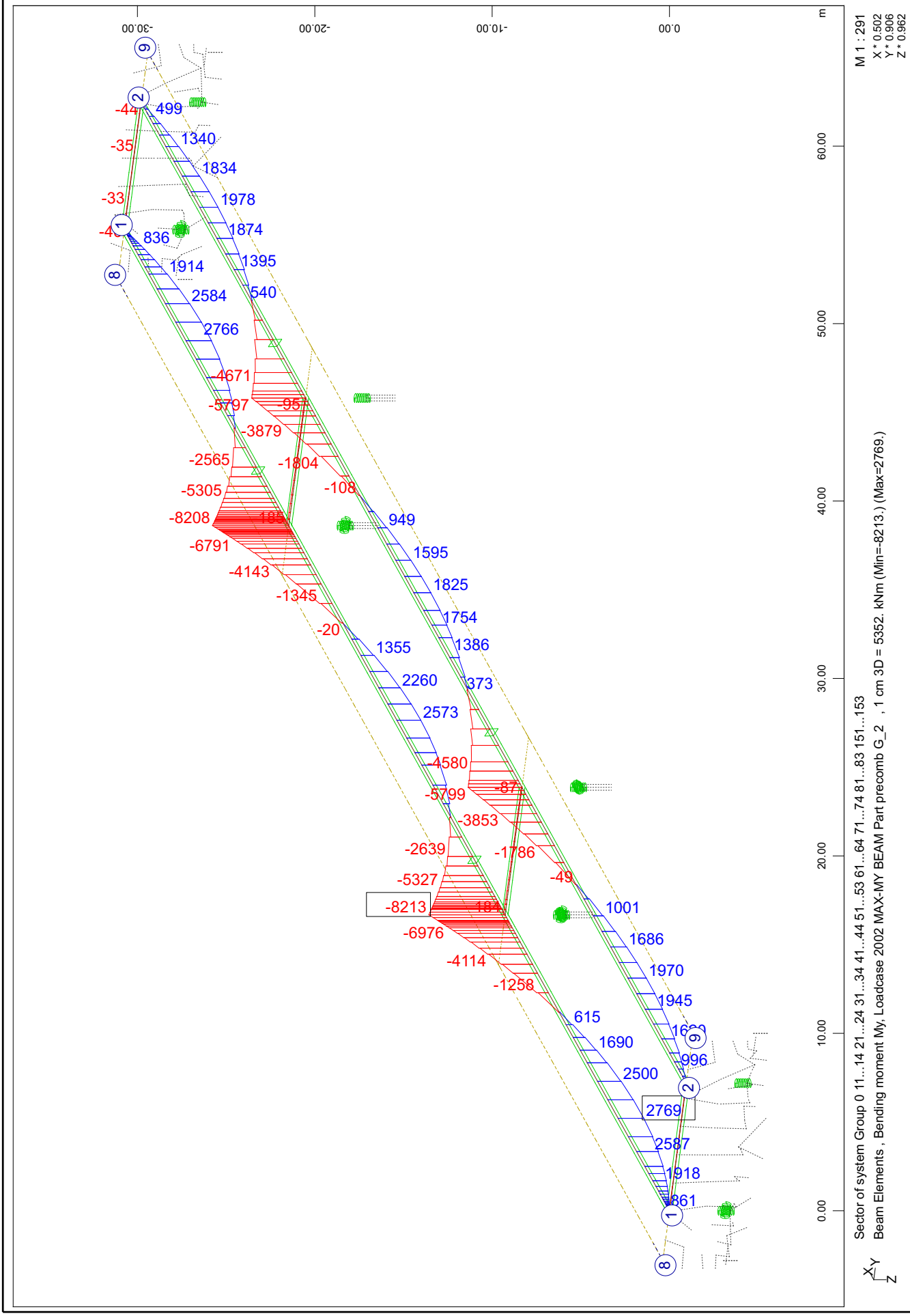

SOFiSTiK AG - www.sofistik.de

Composite bridge 38+50+38, b=14.25m, 2x2HL1100R HISTAR460 , slab 0.30m C30/37
Results for characteristic part-precombinations of loads: G_2

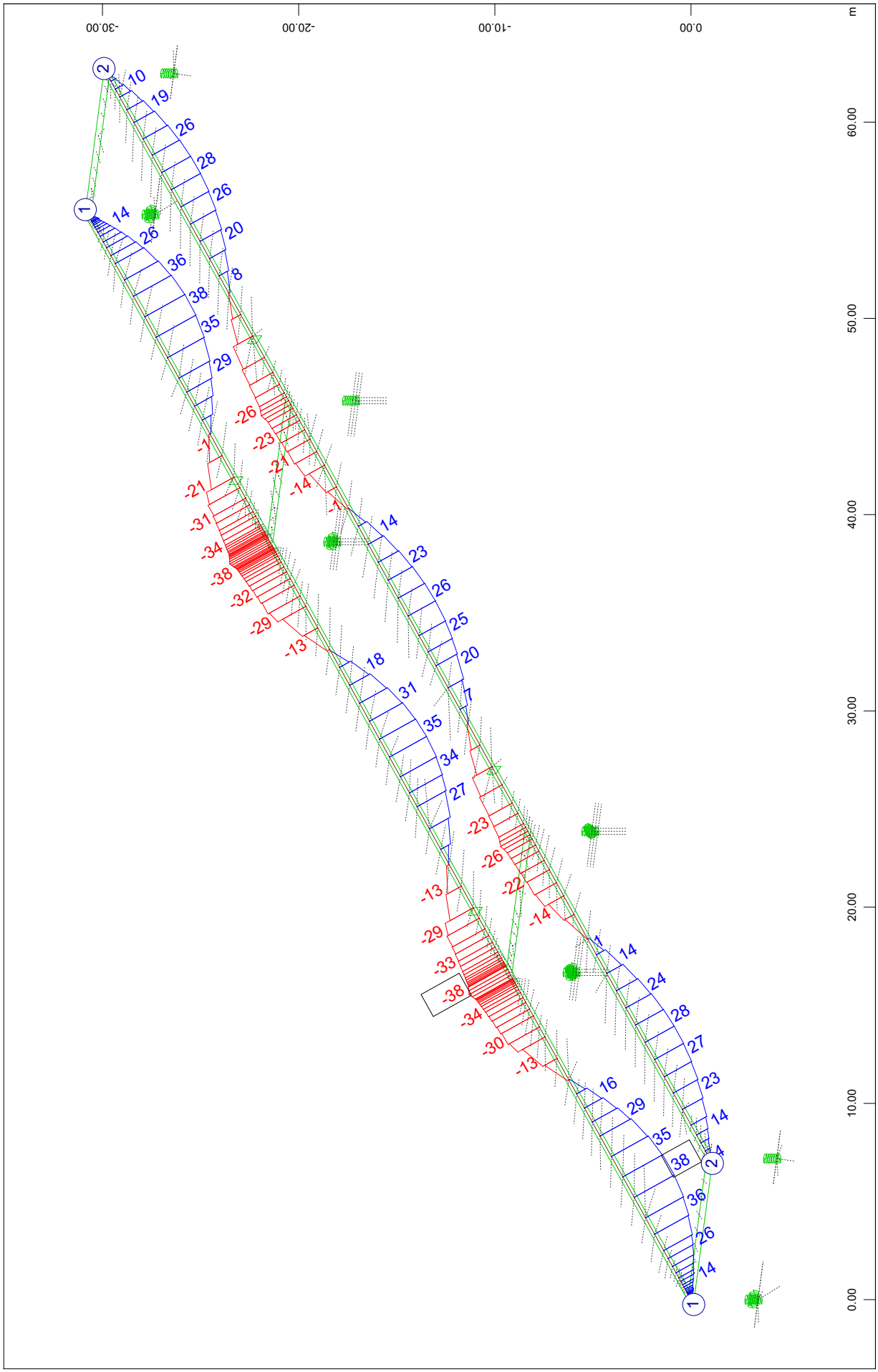

SOFiSTiK AG - www.sofistik.de

Composite bridge 38+50+38, b=14.25m, 2x2HL1100R HISTAR460 , slab 0.30m C30/37
Results for characteristic part-precombinations of loads: G_2

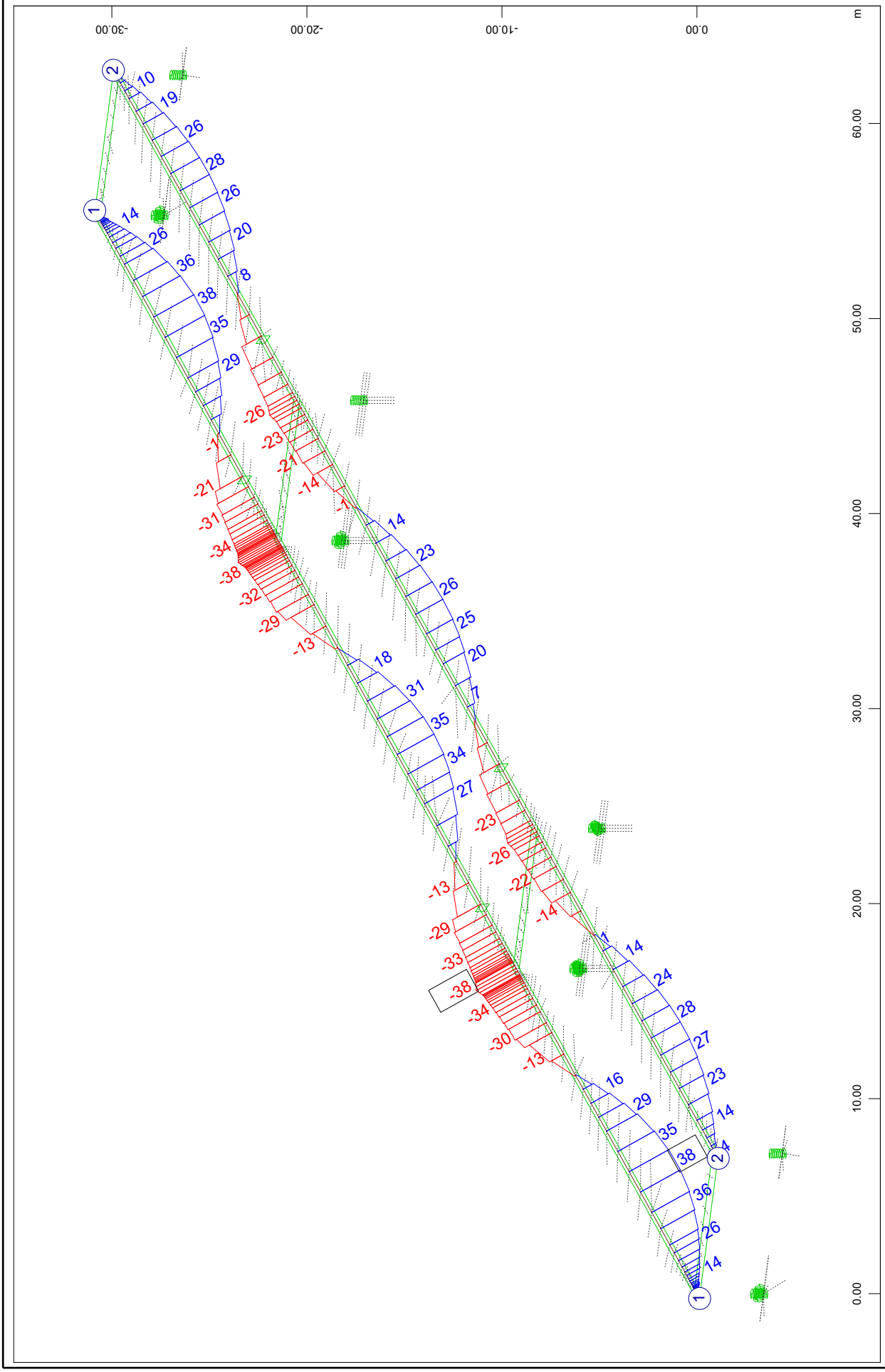

SOFiSTiK AG - www.sofistik.de

Composite bridge 38+50+38, b=14.25m, 2x2HL1100R HISTAR460 , slab 0.30m C30/37
Results for characteristic part-precombinations of loads: G_2

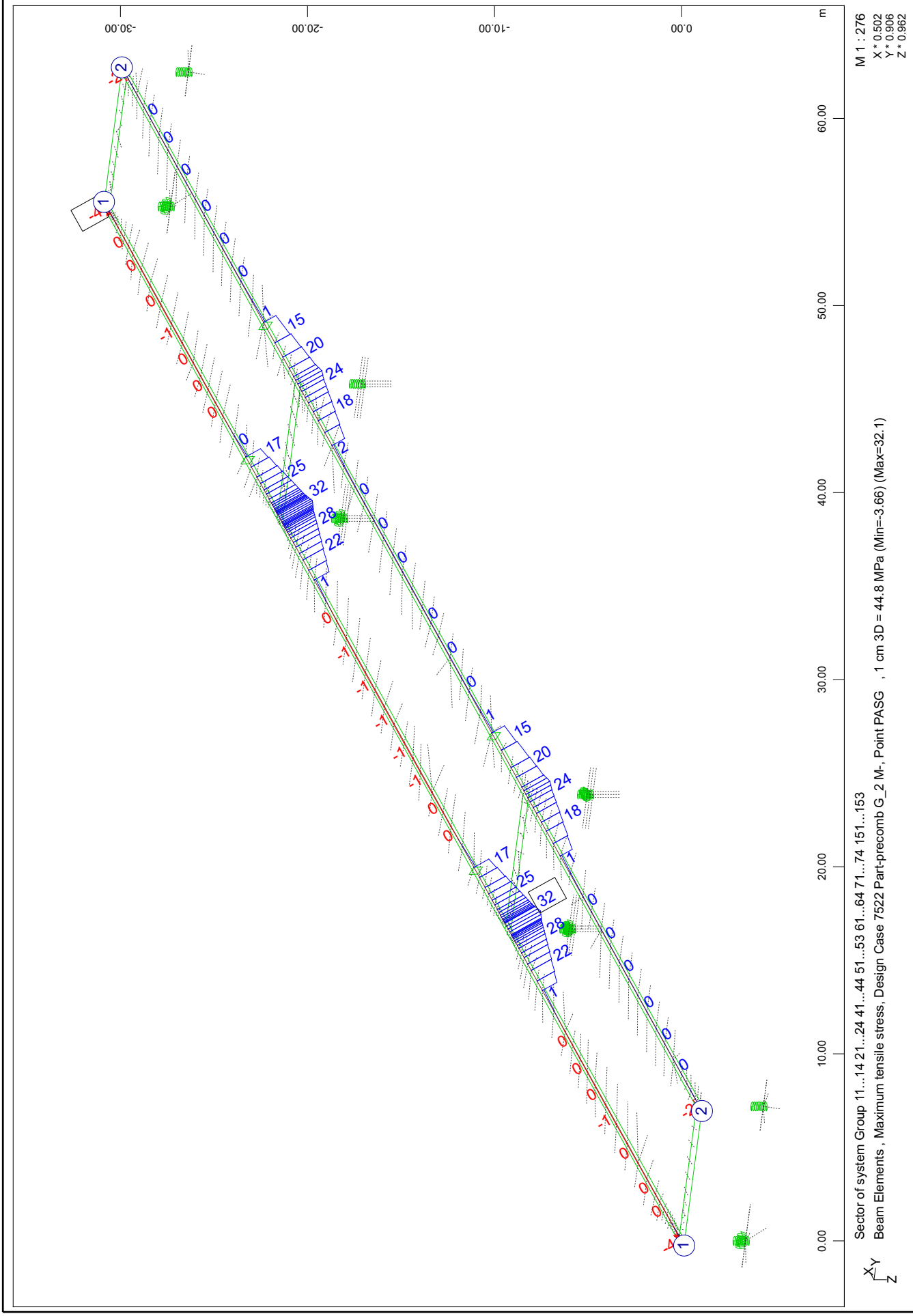

SOFiSTiK AG - www.sofistik.de

Composite bridge 38+50+38, b=14.25m, 2x2HL1100R HISTAR460 , slab 0.30m C30/37
Results for characteristic part-precombinations of loads: G_2

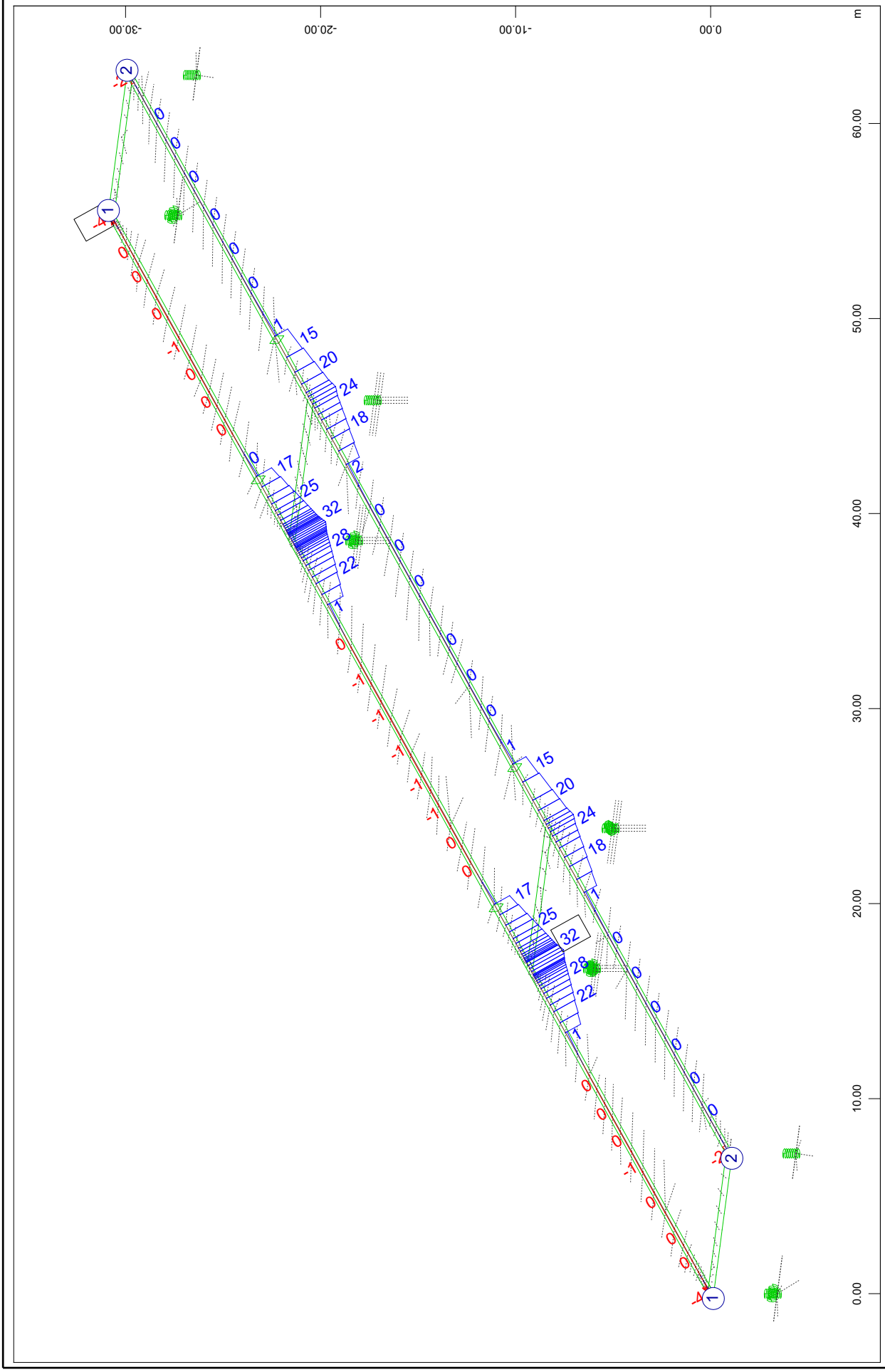

SOFiSTiK AG - www.sofistik.de

Composite bridge 38+50+38, b=14.25m, 2x2HL1100R HISTAR460 , slab 0.30m C30/37
Results for characteristic part-precombinations of loads: G_2

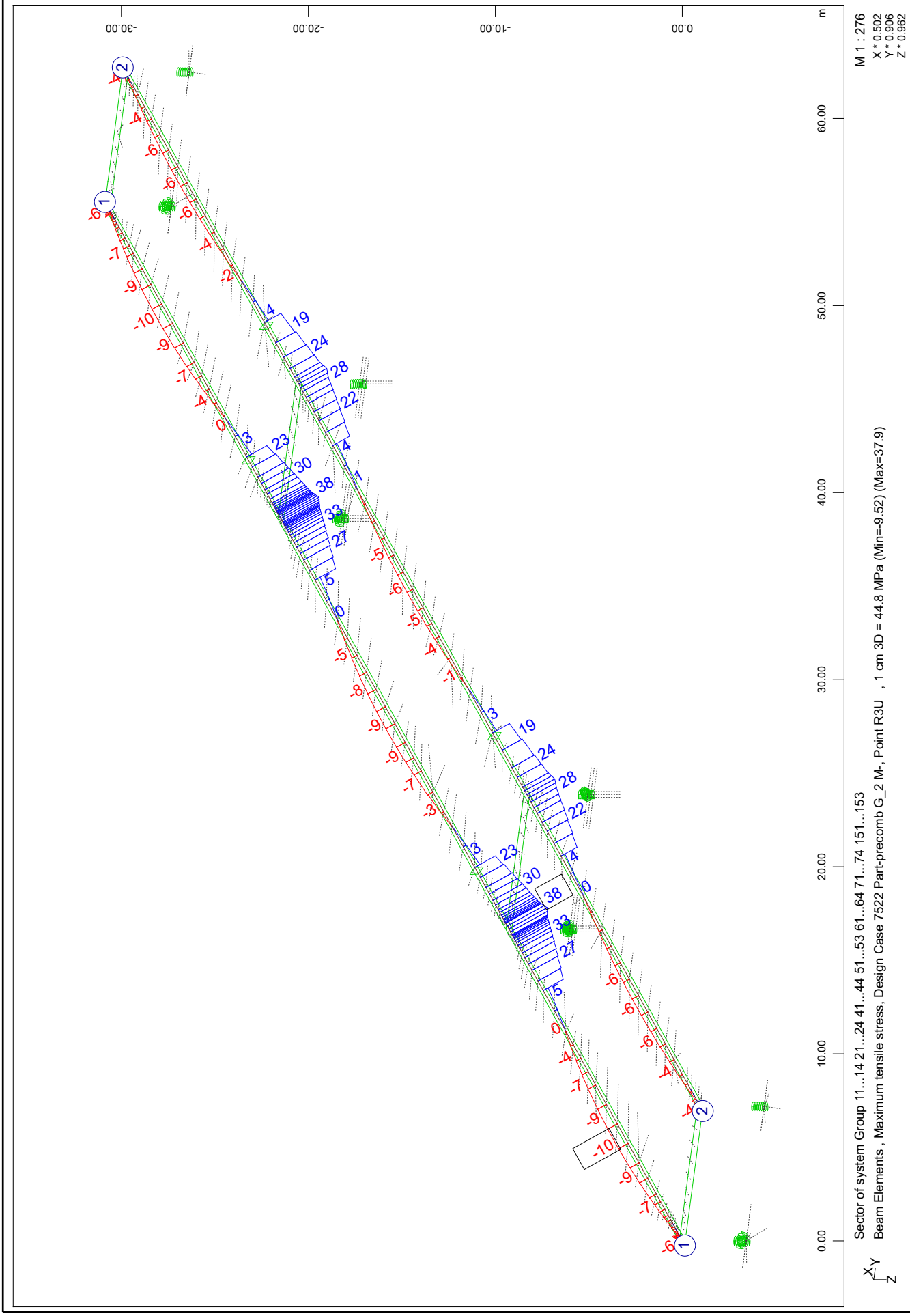

Composite bridge 38+50+38, b=14.25m, 2x2HL1100R HISTAR460 , slab 0.30m C30/37
Results for characteristic part-precombinations of loads: G_2

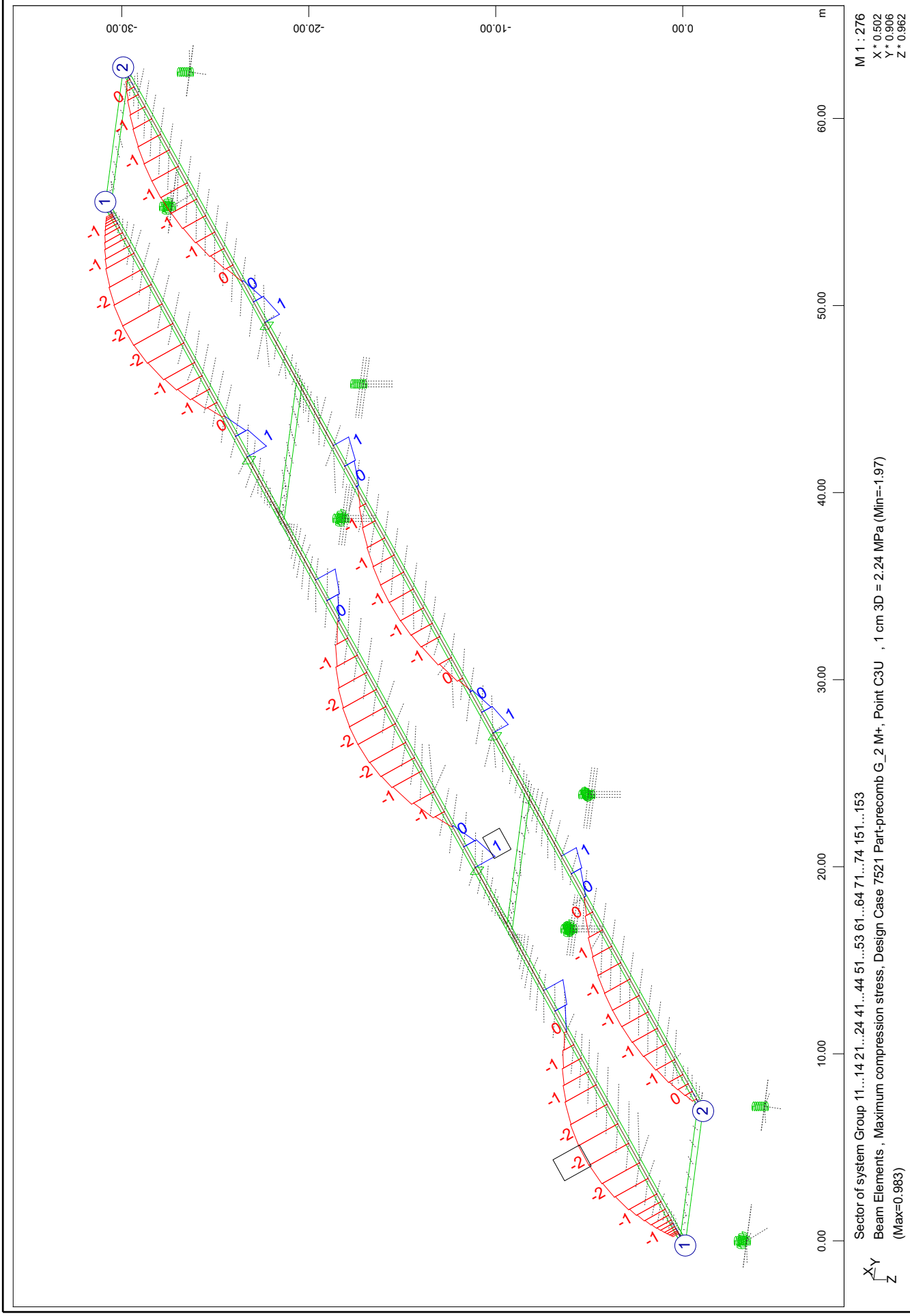

SOFiSTiK AG - www.sofistik.de

Composite bridge 38+50+38, b=14.25m, 2x2HL1100R HISTAR460 , slab 0.30m C30/37
Results for characteristic part-precombinations of loads: G_2

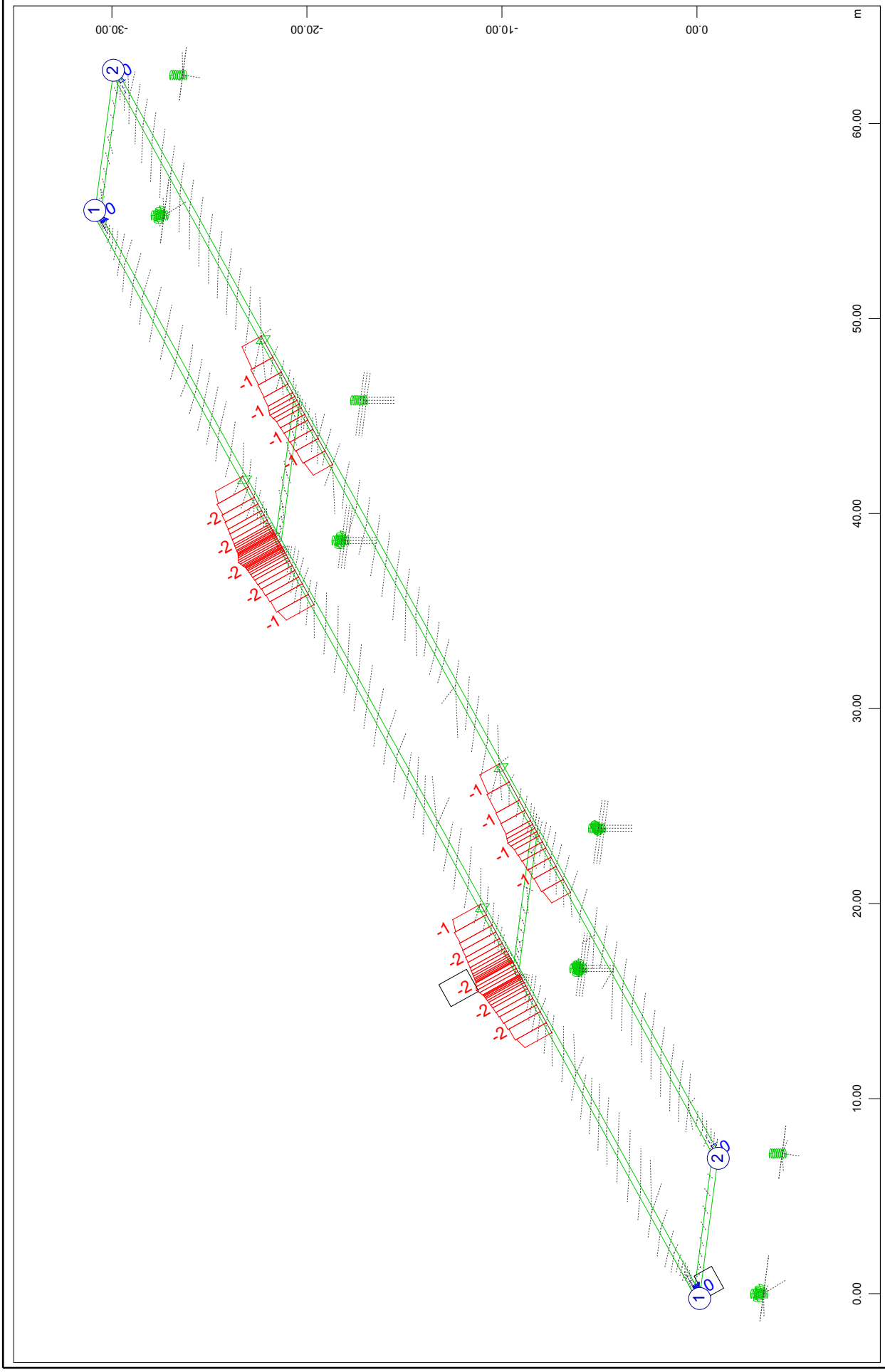

SOFiSTiK AG - www.sofistik.de

Composite bridge 38+50+38, b=14.25m, 2x2HL1100R HISTAR460 , slab 0.30m C30/37
Results for characteristic part-precombinations of loads: C_2

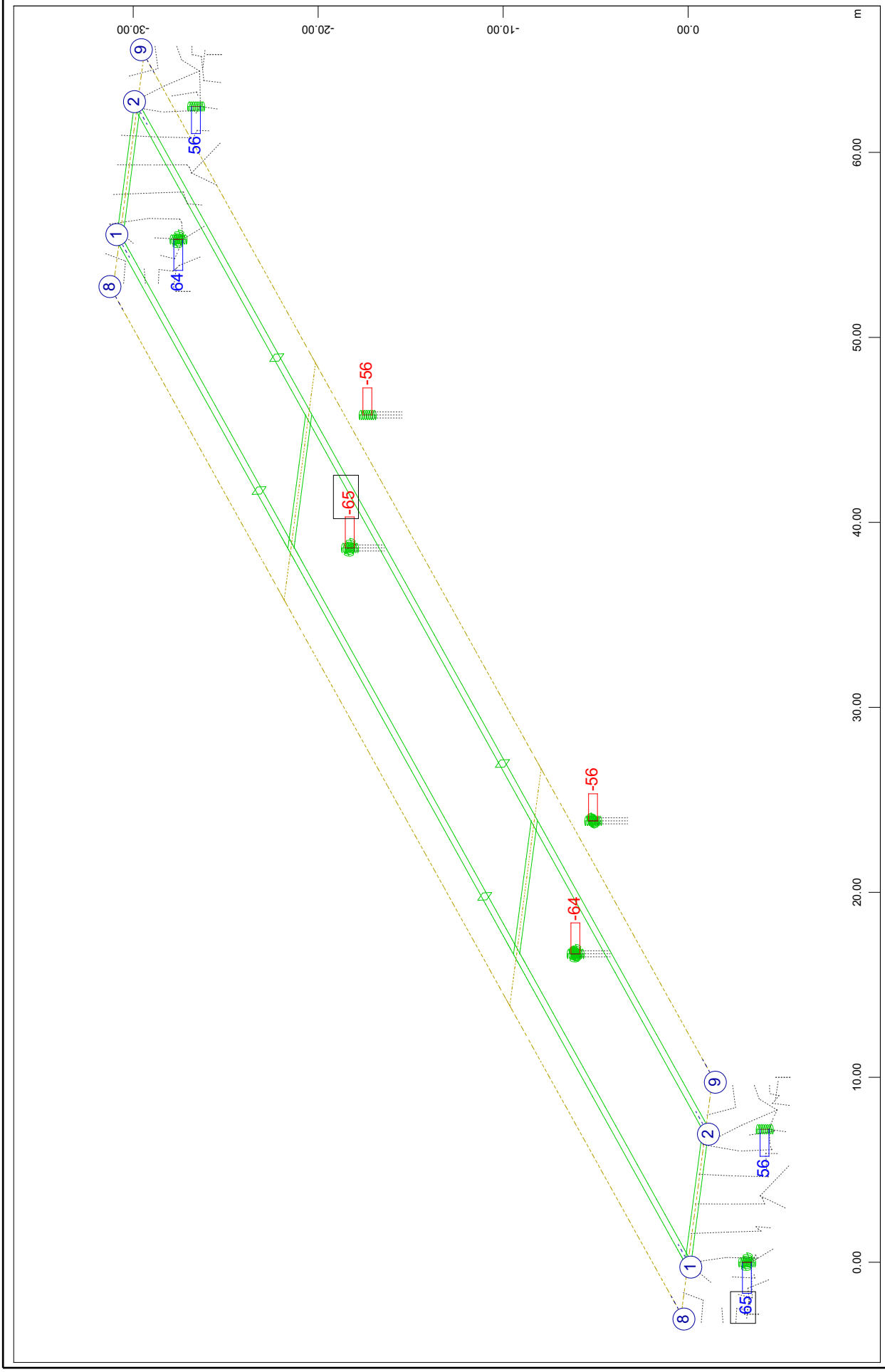

SOFiSTiK AG - www.sofistik.de

Composite bridge 38+50+38, b=14.25m, 2x2HL1100R HISTAR460 , slab 0.30m C30/37
Results for characteristic part-precombinations of loads: C_2

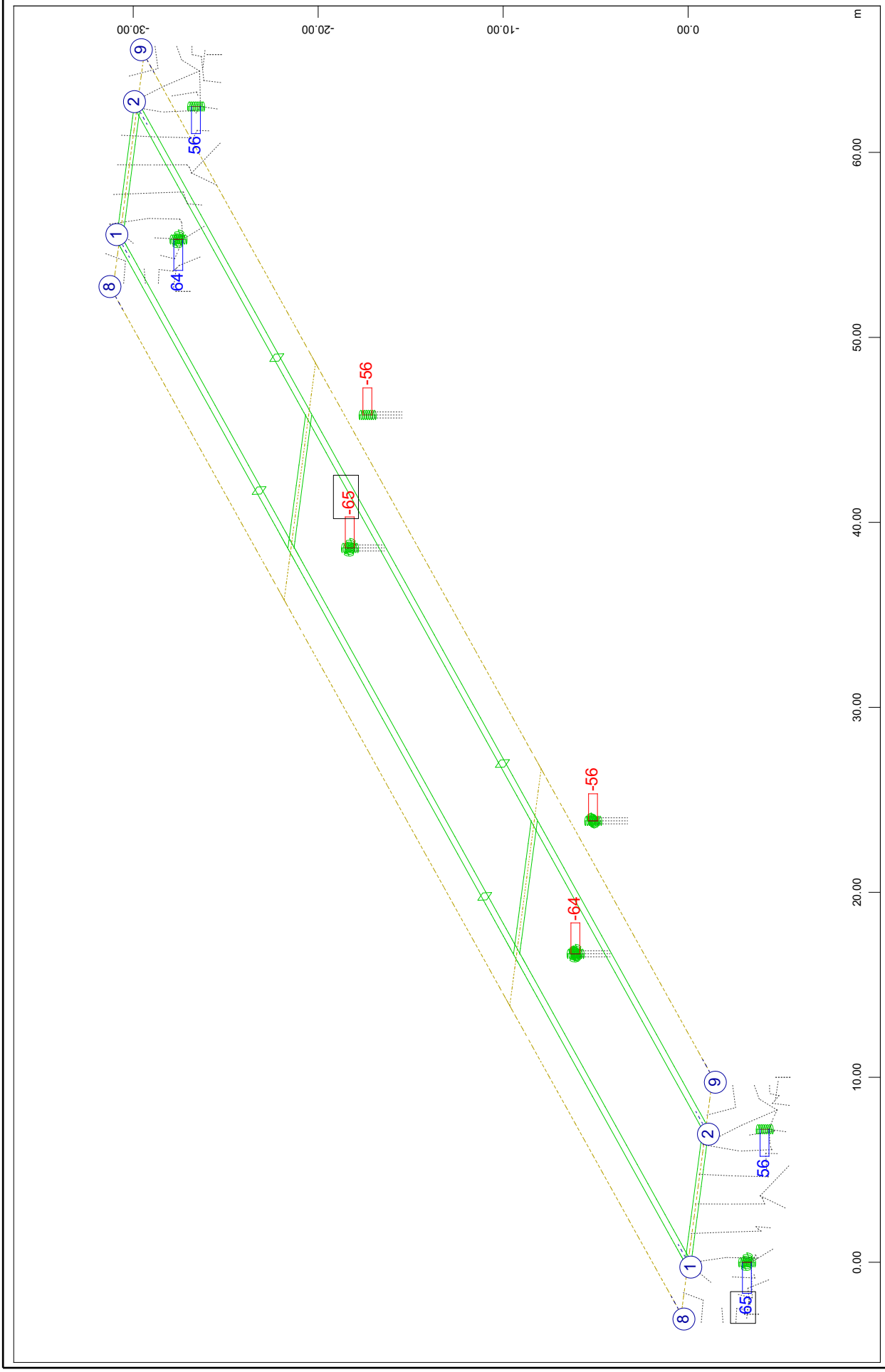

SOFiSTiK AG - www.sofistik.de

Composite bridge 38+50+38, b=14.25m, 2x2HL1100R HISTAR460 , slab 0.30m C30/37
Results for characteristic part-precombinations of loads: C_2

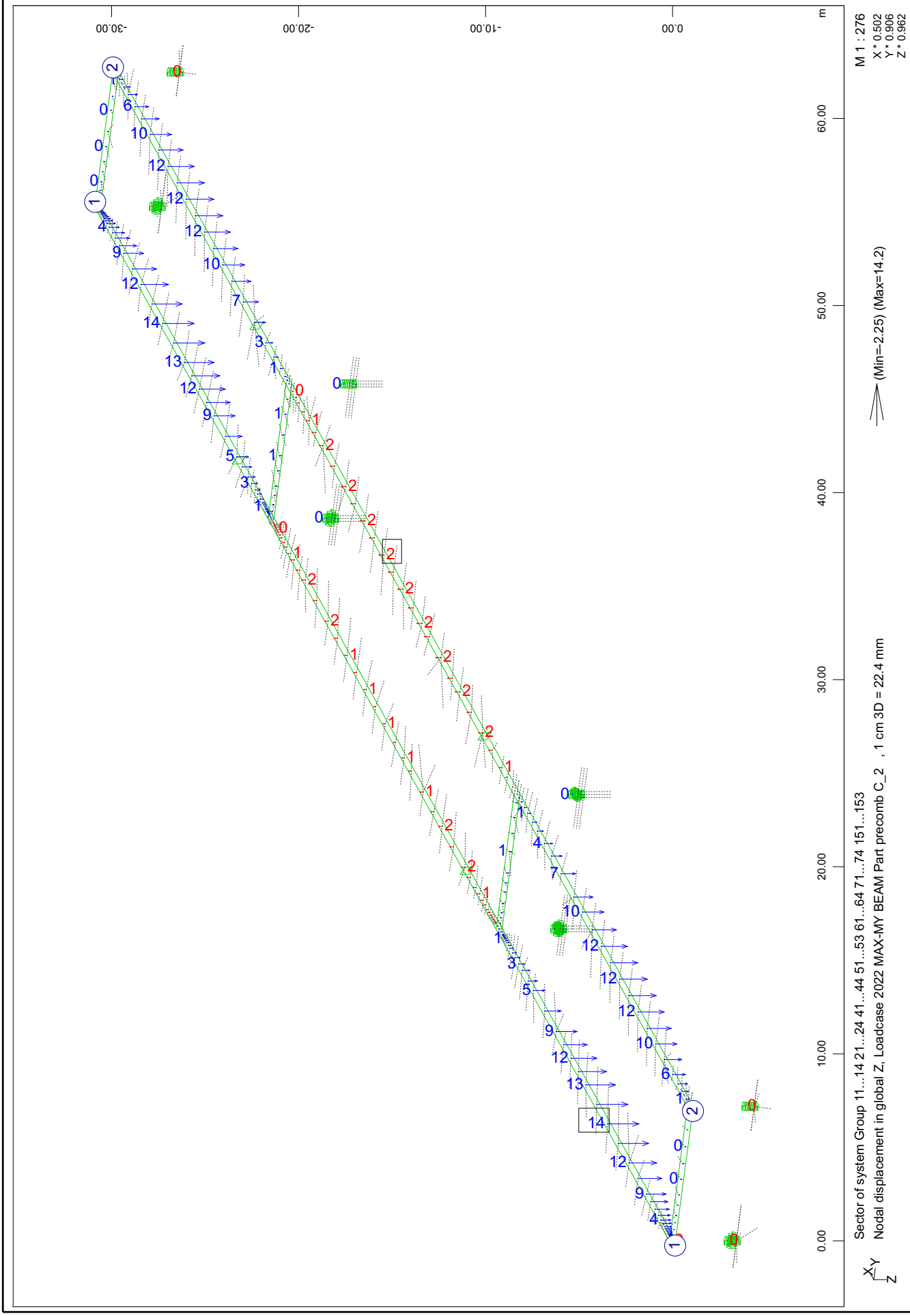

SOFiSTiK AG - www.sofistik.de

Composite bridge 38+50+38, b=14.25m, 2x2HL1100R HISTAR460 , slab 0.30m C30/37
Results for characteristic part-precombinations of loads: C_2

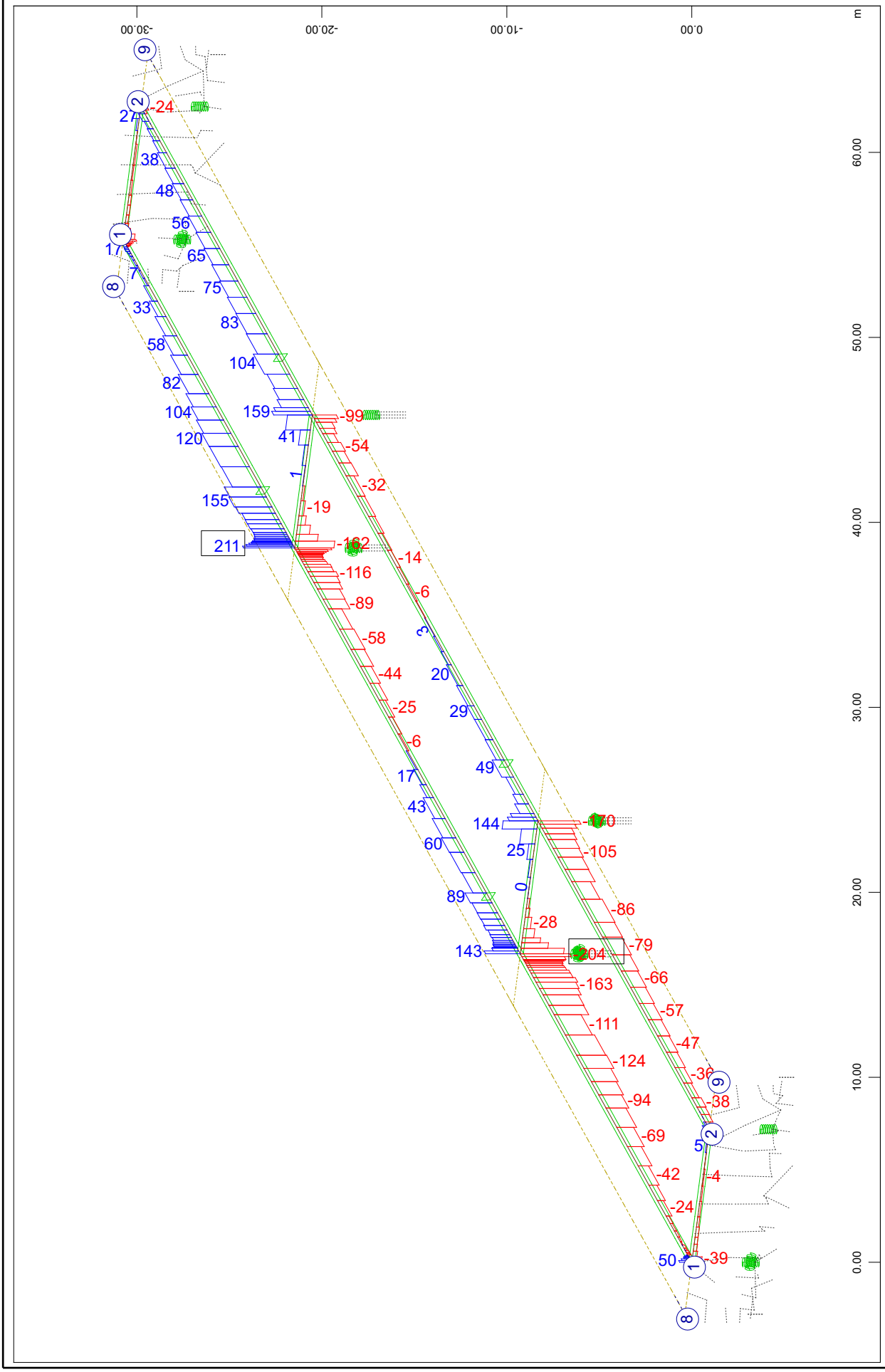

Composite bridge 38+50+38, b=14.25m, 2x2HL1100R HISTAR460 , slab 0.30m C30/37
Results for characteristic part-precombinations of loads: C_2

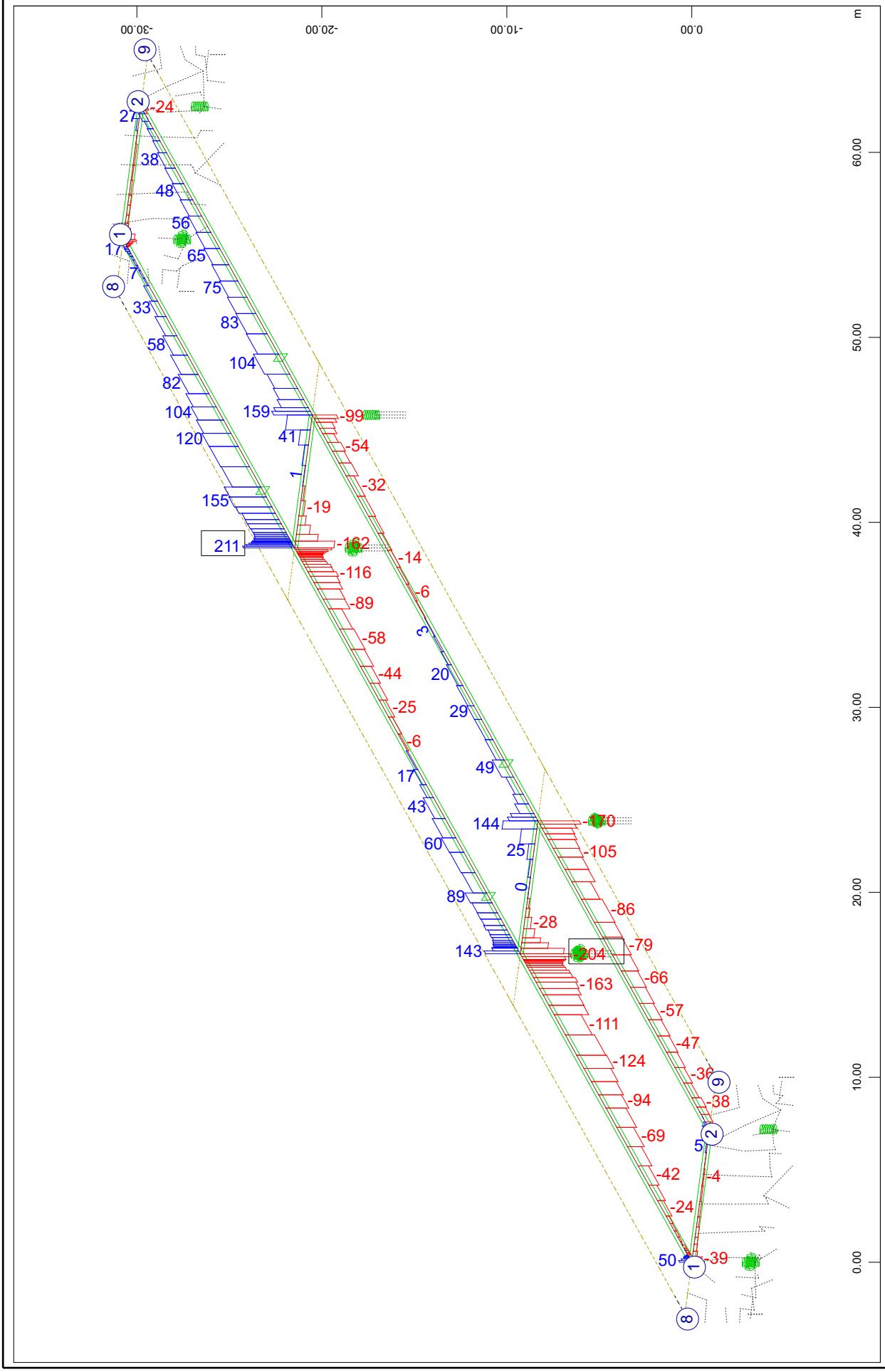

SOFiSTiK AG - www.sofistik.de

Composite bridge 38+50+38, b=14.25m, 2x2HL1100R HISTAR460 , slab 0.30m C30/37
Results for characteristic part-precombinations of loads: C_2

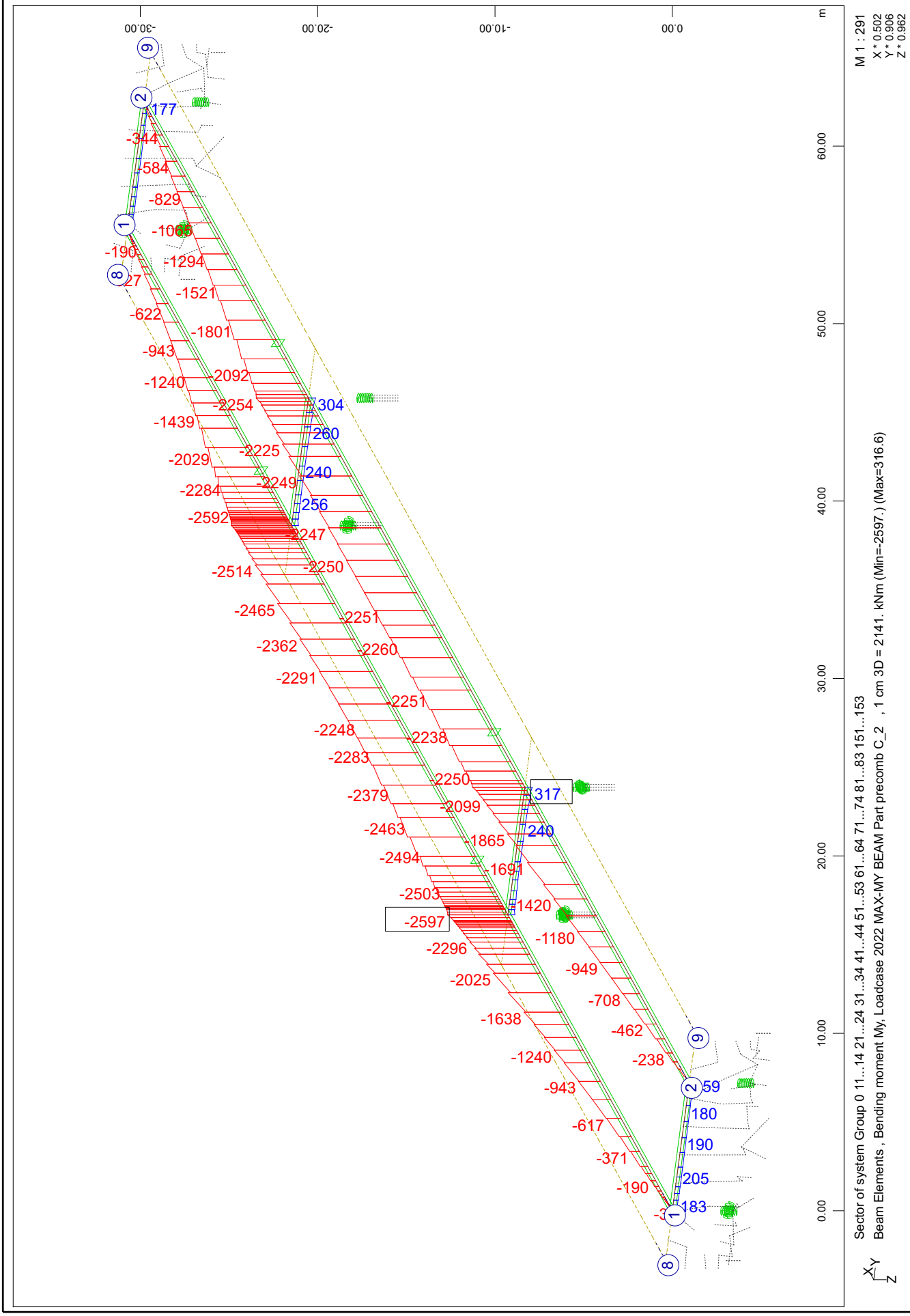

Composite bridge 38+50+38, b=14.25m, 2x2HL1100R HISTAR460 , slab 0.30m C30/37
Results for characteristic part-precombinations of loads: C_2

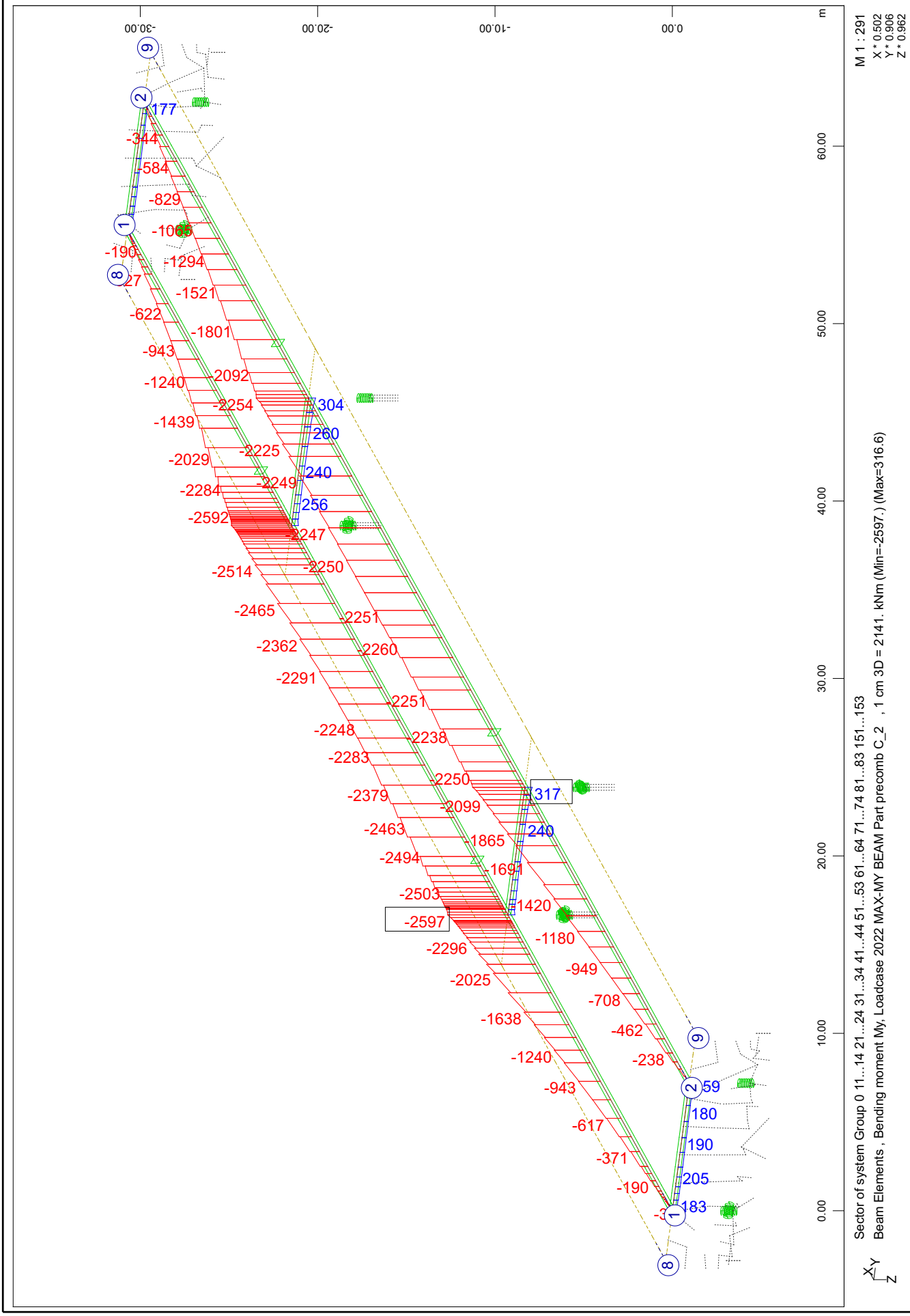

Composite bridge 38+50+38, b=14.25m, 2x2HL1100R HISTAR460 , slab 0.30m C30/37
Results for characteristic part-precombinations of loads: C_2

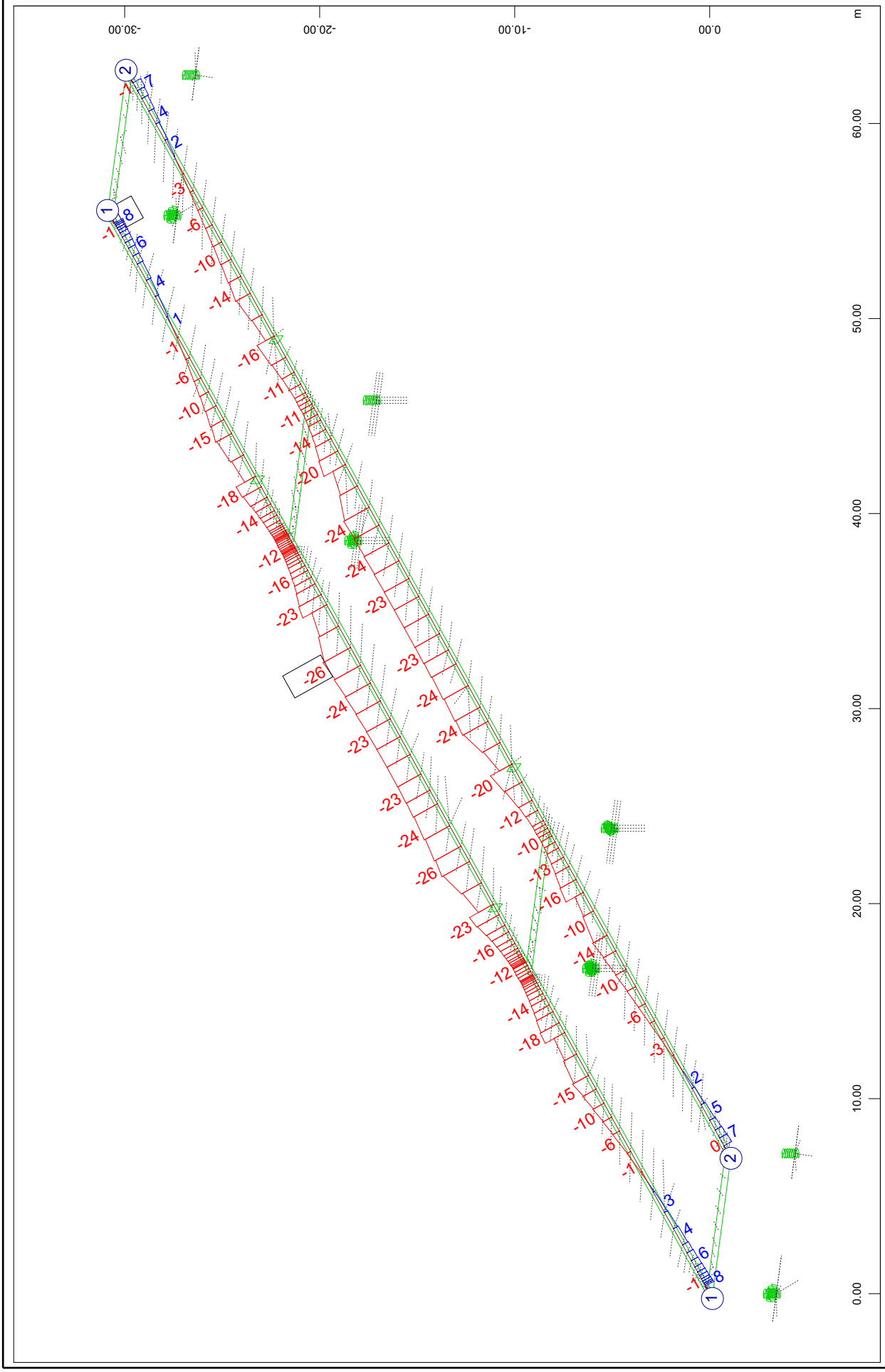

Composite bridge 38+50+38, b=14.25m, 2x2HL1100R HISTAR460 , slab 0.30m C30/37
Results for characteristic part-precombinations of loads: C_2

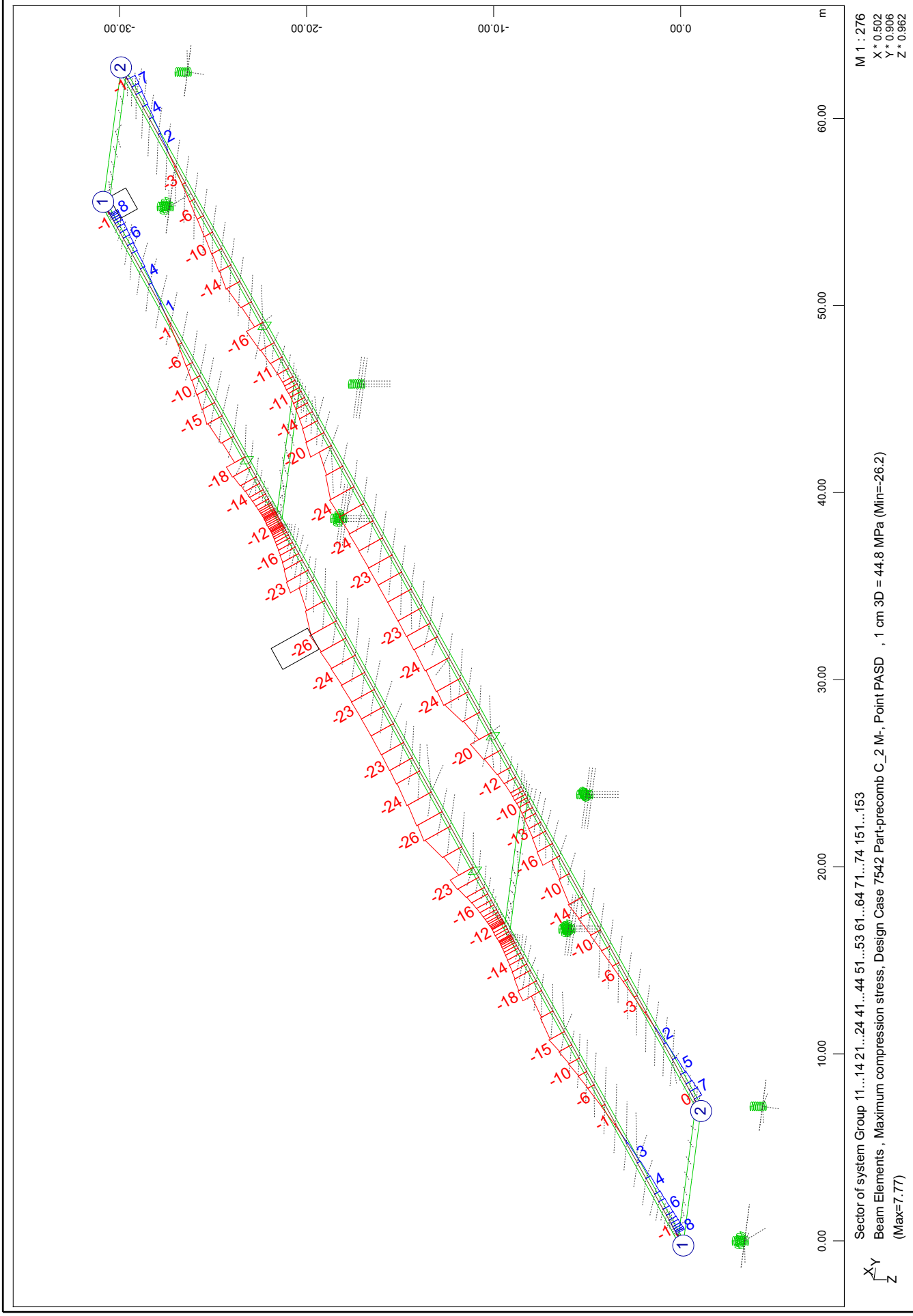

SOFiSTiK AG - www.sofistik.de

Composite bridge 38+50+38, b=14.25m, 2x2HL1100R HISTAR460 , slab 0.30m C30/37
Results for characteristic part-precombinations of loads: C_2

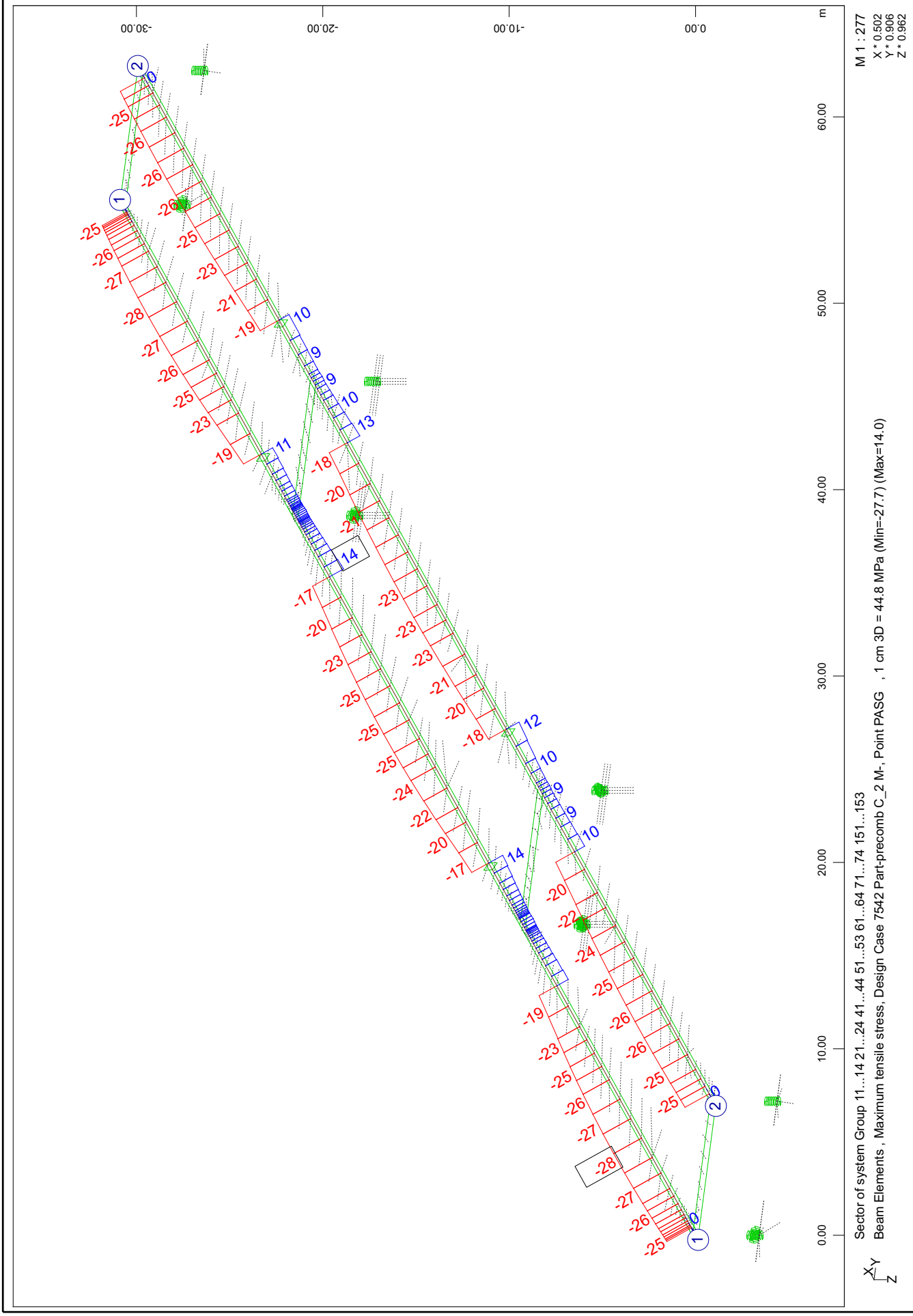

SOFiSTiK AG - www.sofistik.de

Composite bridge 38+50+38, b=14.25m, 2x2HL1100R HISTAR460 , slab 0.30m C30/37
Results for characteristic part-precombinations of loads: C_2

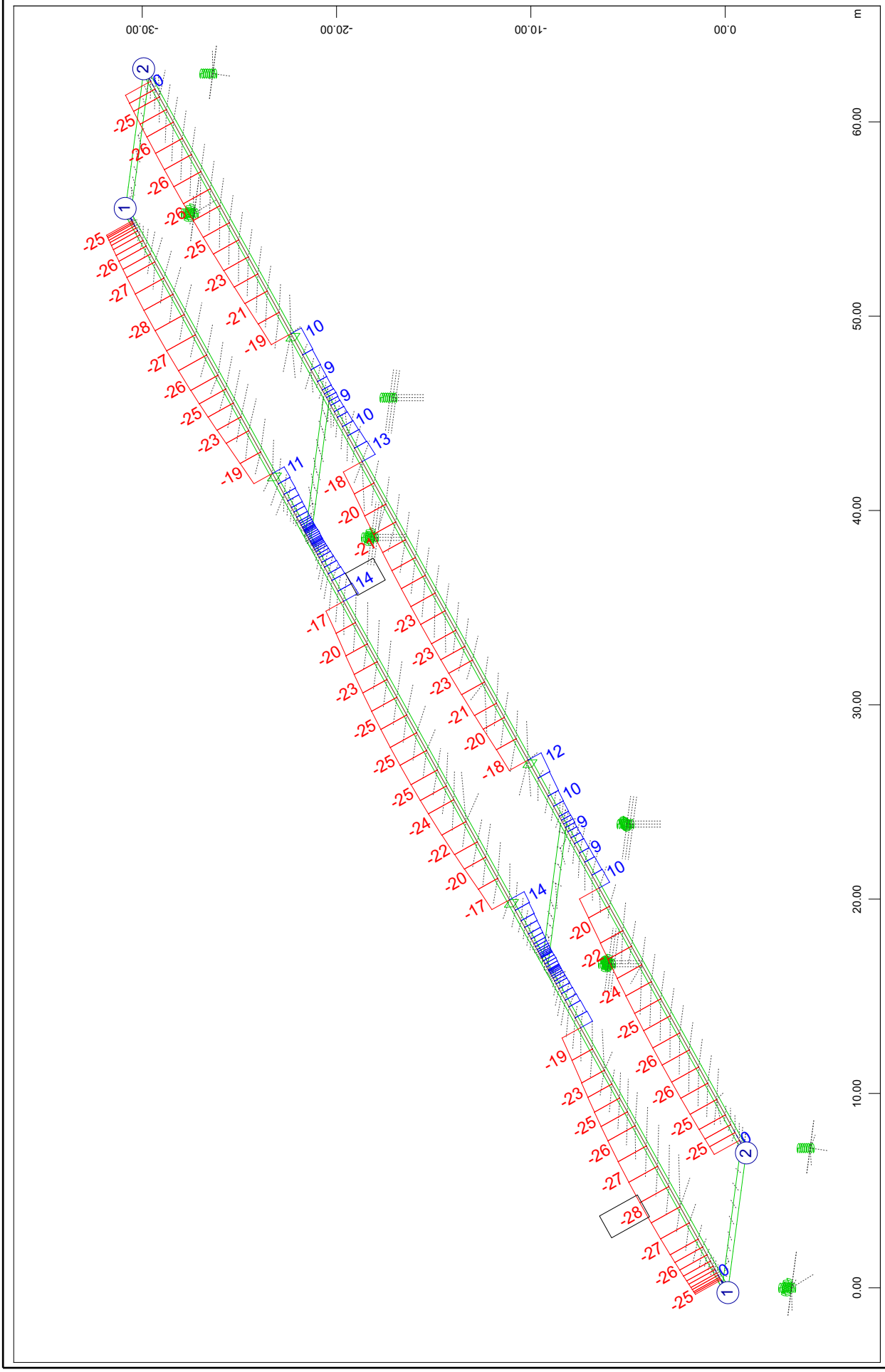

SOFiSTiK AG - www.sofistik.de

Composite bridge 38+50+38, b=14.25m, 2x2HL1100R HISTAR460 , slab 0.30m C30/37
Results for characteristic part-precombinations of loads: C_2

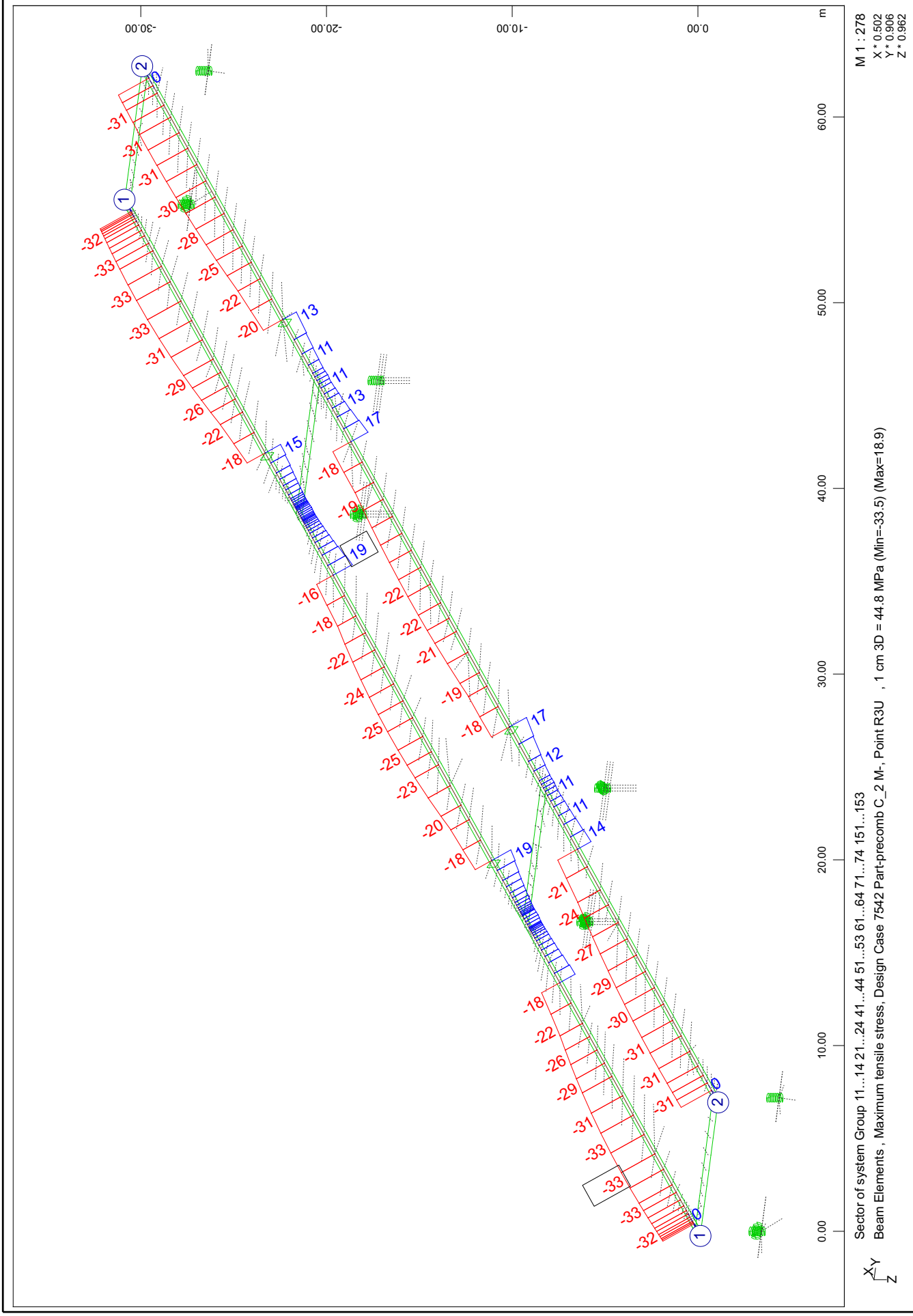

SOFiSTiK AG - www.sofistik.de

Composite bridge 38+50+38, b=14.25m, 2x2HL1100R HISTAR460 , slab 0.30m C30/37
Results for characteristic part-precombinations of loads: C_2

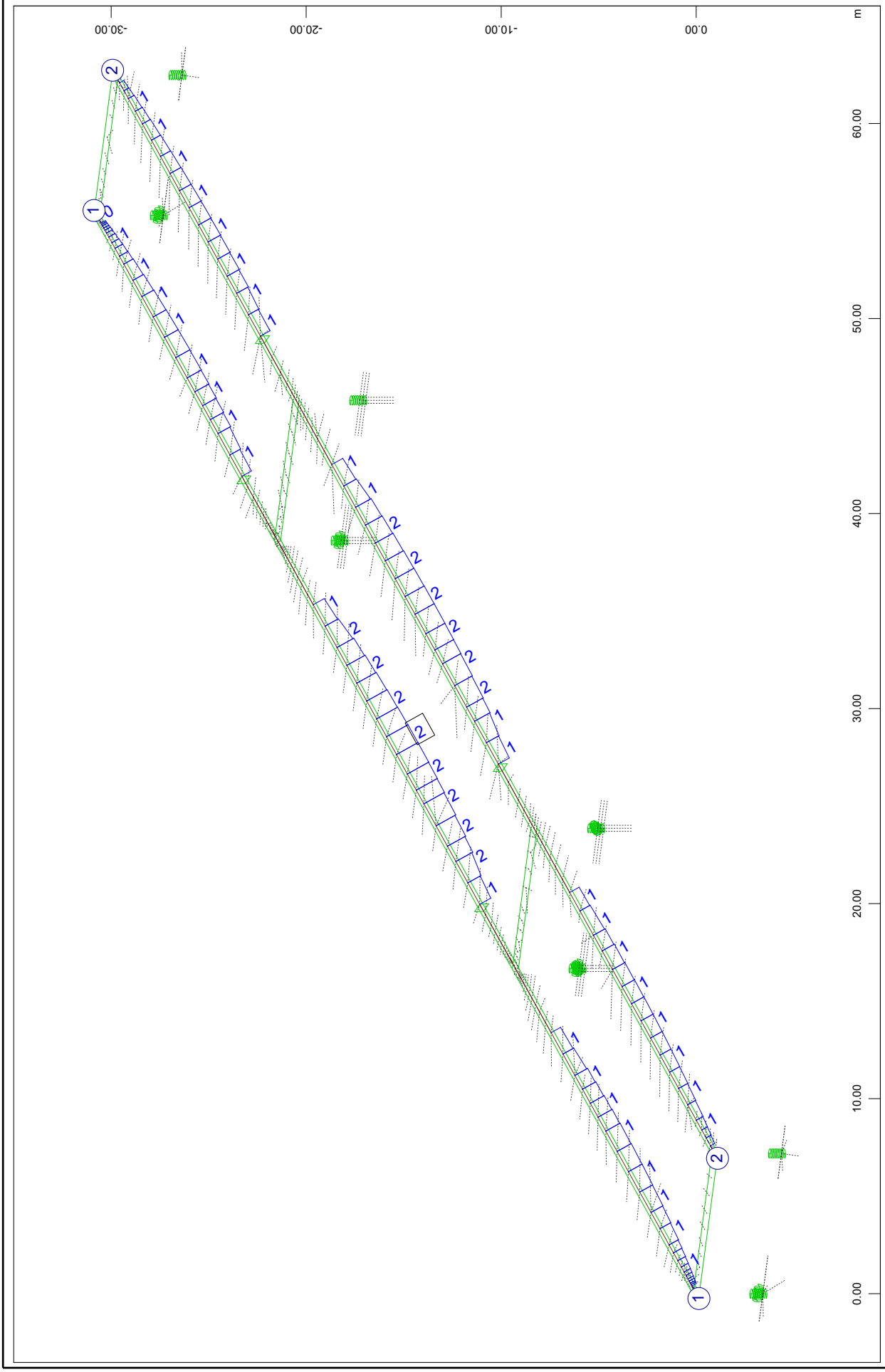

SOFiSTiK AG - www.sofistik.de

Composite bridge 38+50+38, b=14.25m, 2x2HL1100R HISTAR460 , slab 0.30m C30/37
Results for characteristic part-precombinations of loads: C_2

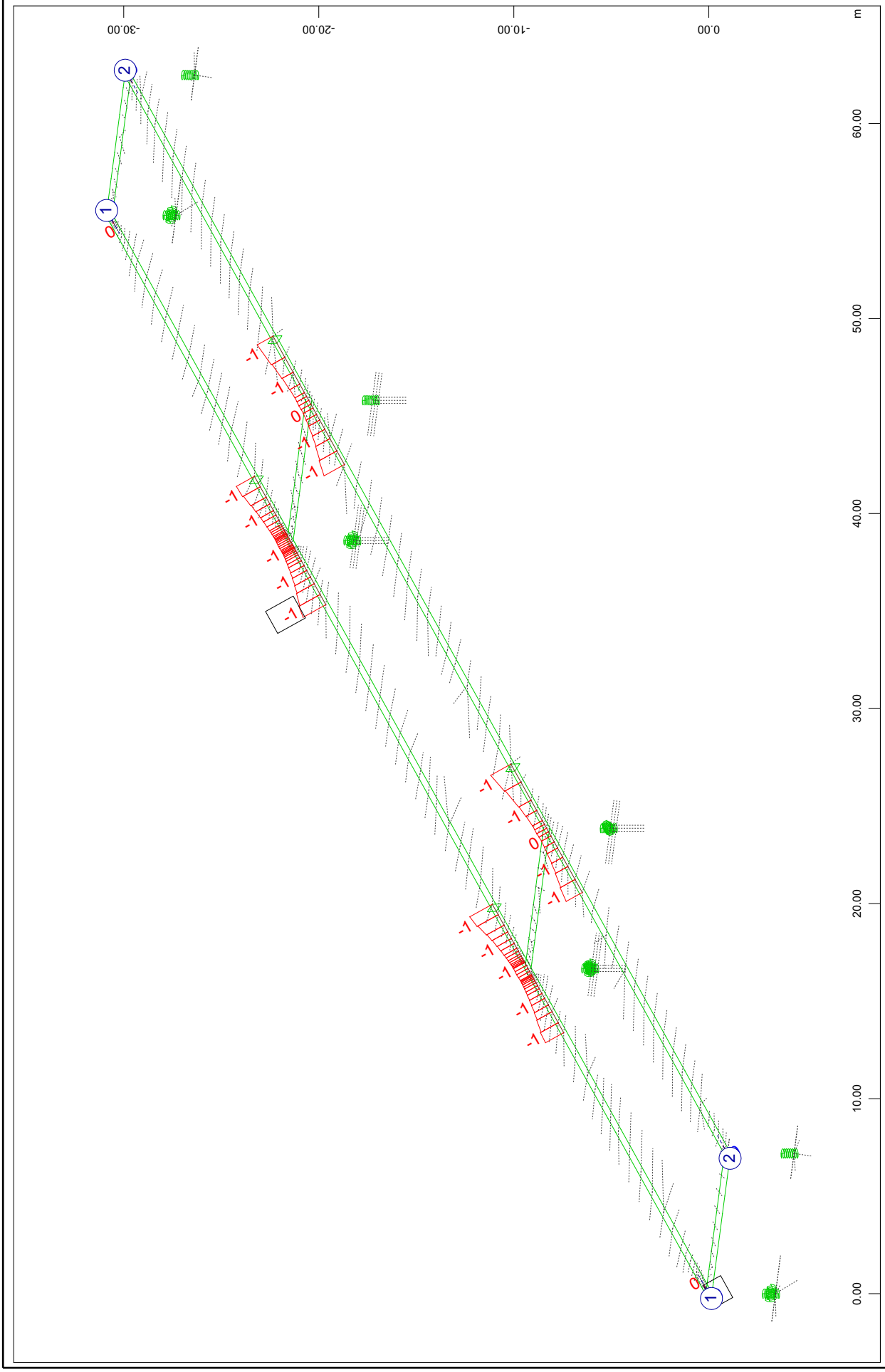

SOFiSTiK AG - www.sofistik.de

Composite bridge 38+50+38, b=14.25m, 2x2HL1100R HISTAR460 , slab 0.30m C30/37
Results for characteristic precombinations of loads: G=G1+G2

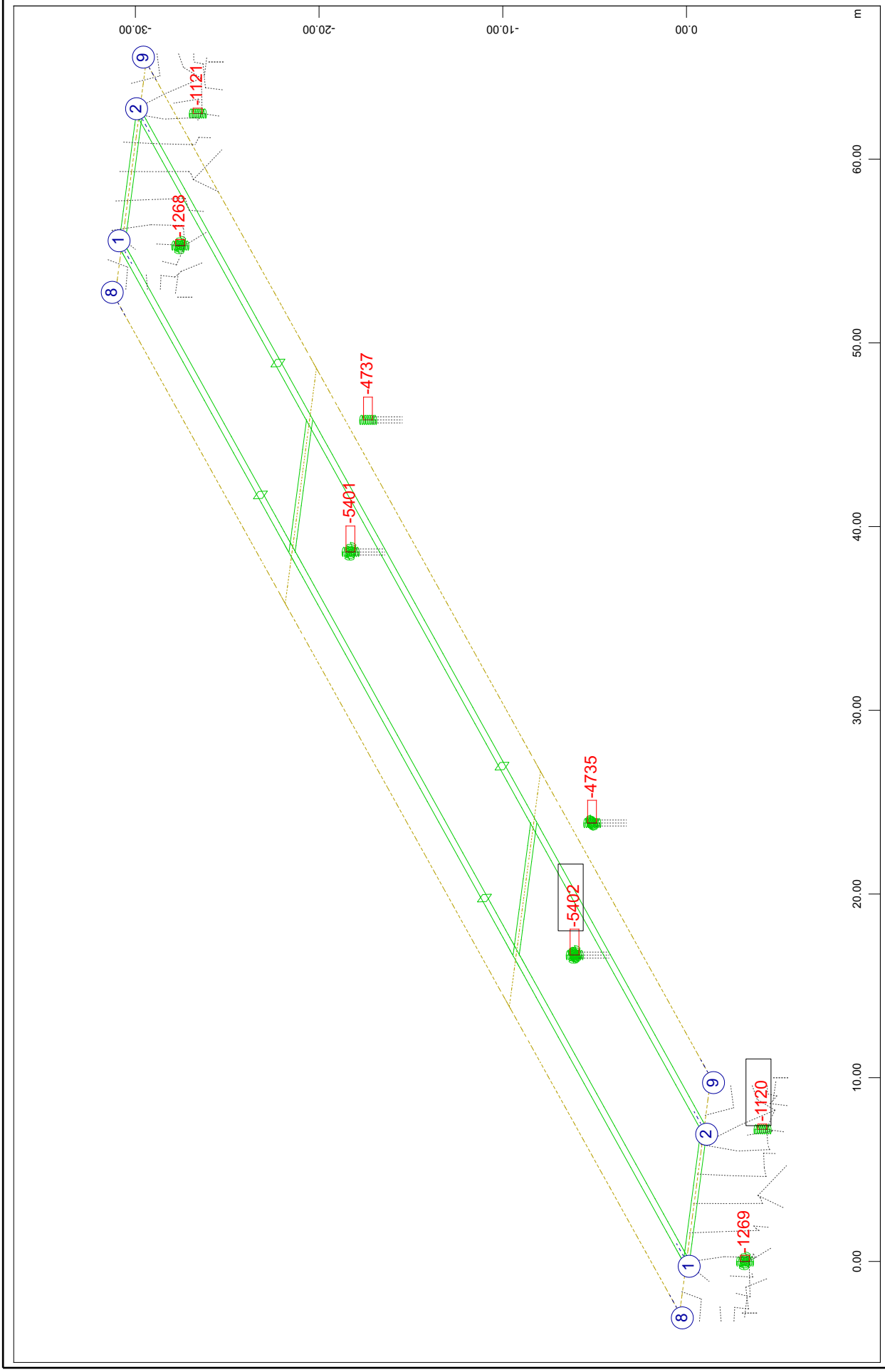

SOFiSTiK AG - www.sofistik.de

Composite bridge 38+50+38, b=14.25m, 2x2HL1100R HISTAR460 , slab 0.30m C30/37
Results for characteristic precombinations of loads: G=G1+G2

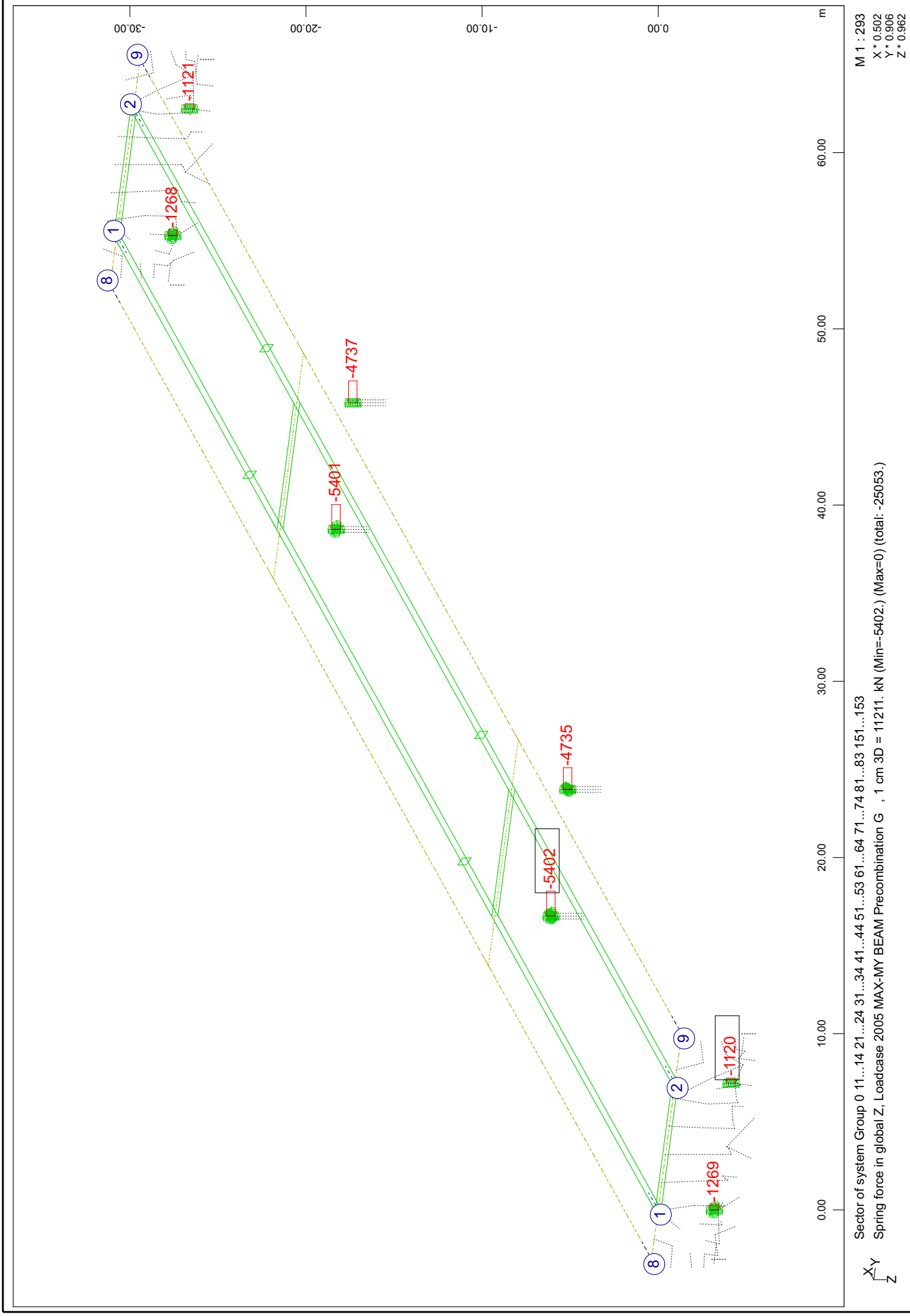

SOFiSTiK AG - www.sofistik.de

Composite bridge 38+50+38, b=14.25m, 2x2HL1100R HISTAR460 , slab 0.30m C30/37
Results for characteristic precombinations of loads: G=G1+G2

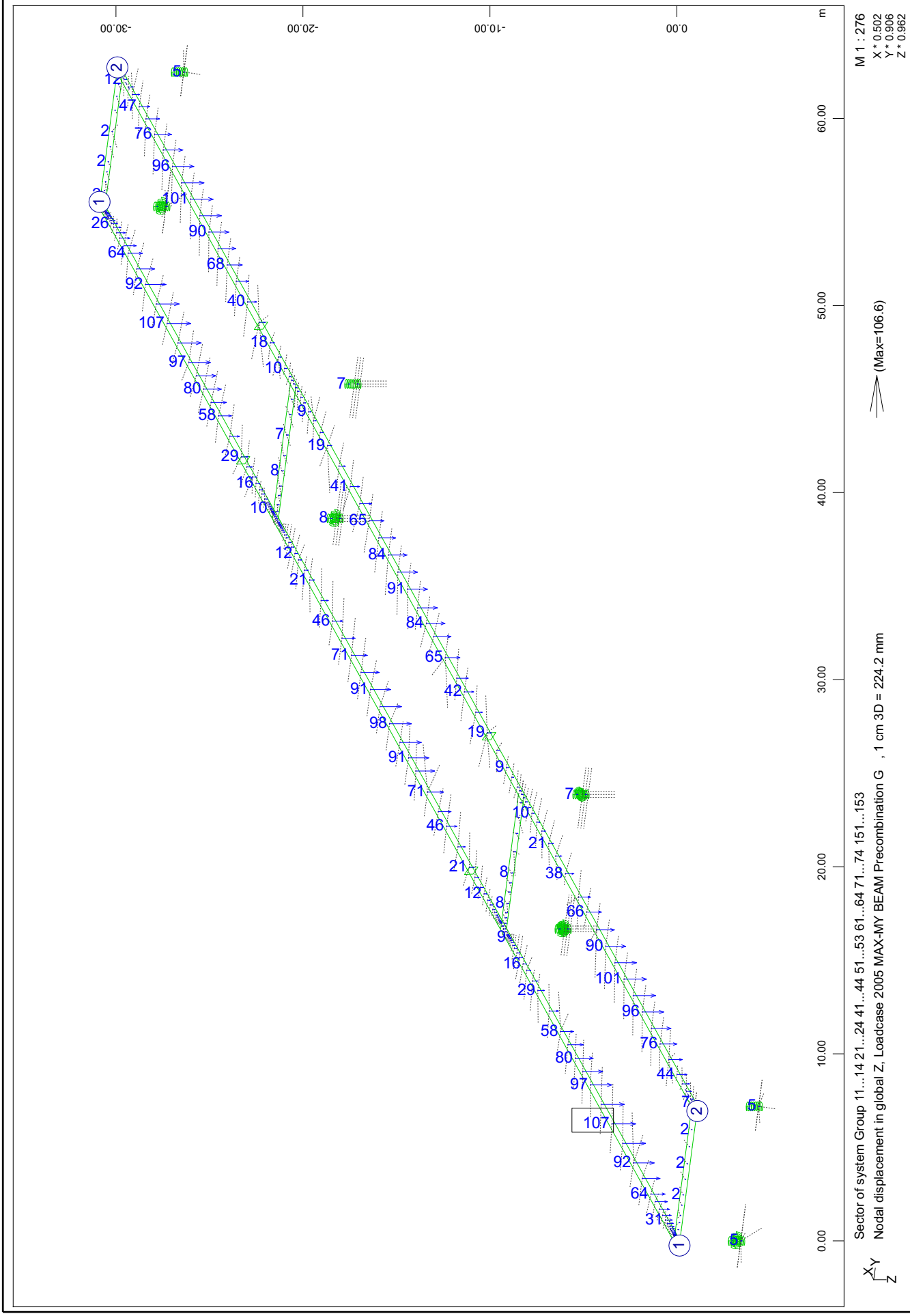

SOFiSTiK AG - www.sofistik.de

Composite bridge 38+50+38, b=14.25m, 2x2HL1100R HISTAR460 , slab 0.30m C30/37
Results for characteristic precombinations of loads: G=G1+G2

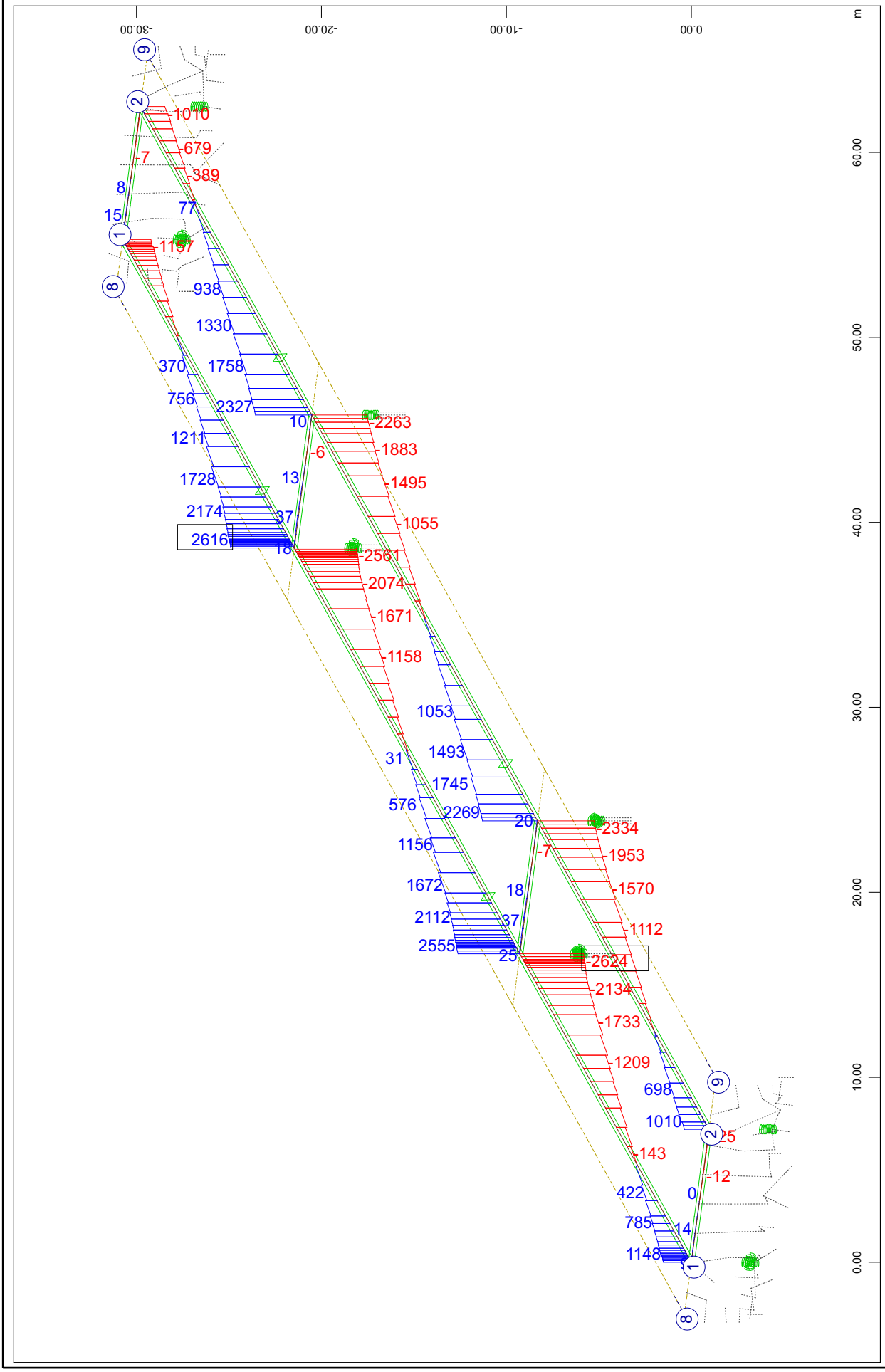

Composite bridge 38+50+38, b=14.25m, 2x2HL1100R HISTAR460 , slab 0.30m C30/37
Results for characteristic precombinations of loads: G=G1+G2

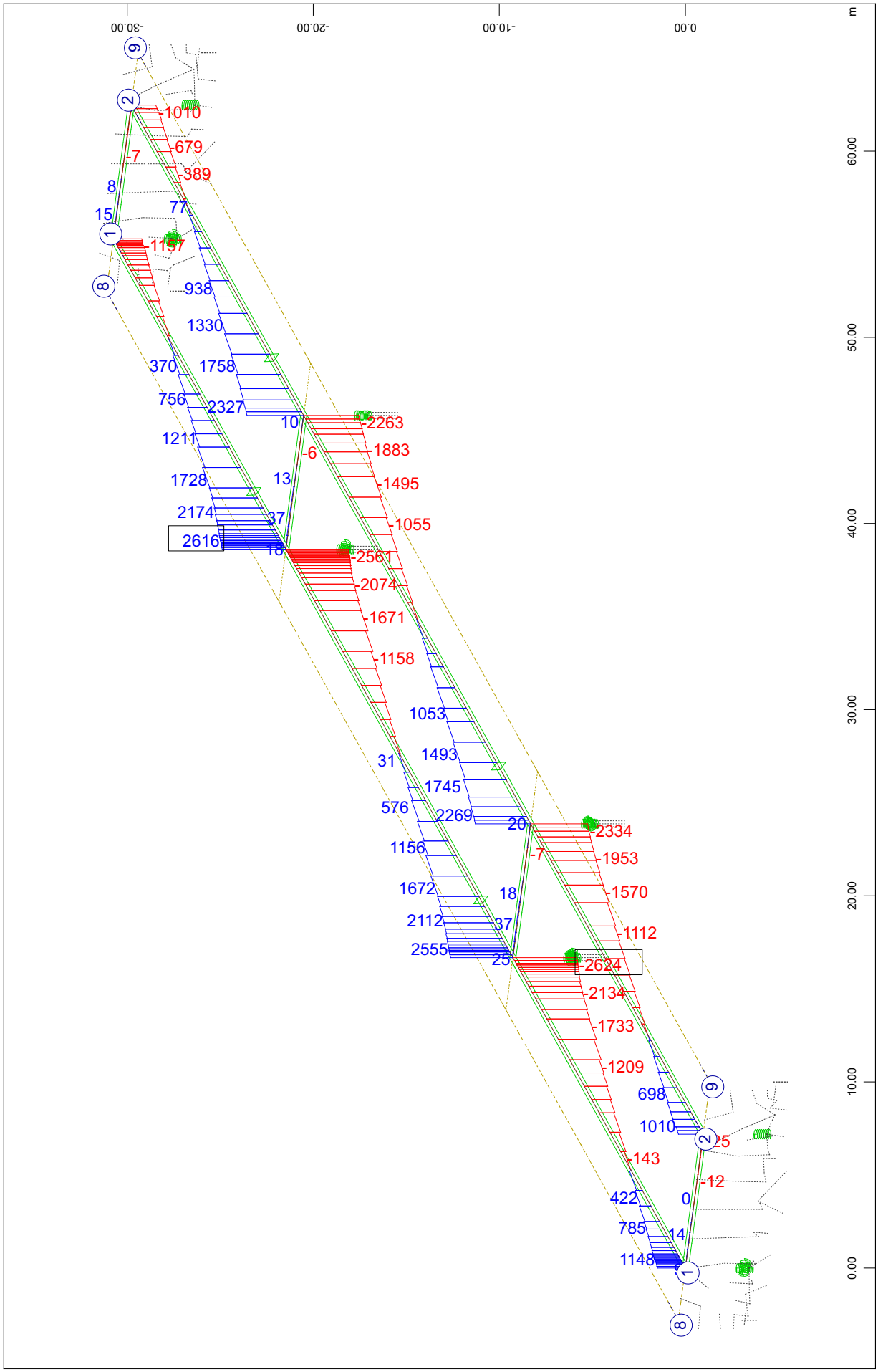

Composite bridge 38+50+38, b=14.25m, 2x2HL1100R HISTAR460 , slab 0.30m C30/37
Results for characteristic precombinations of loads: G=G1+G2

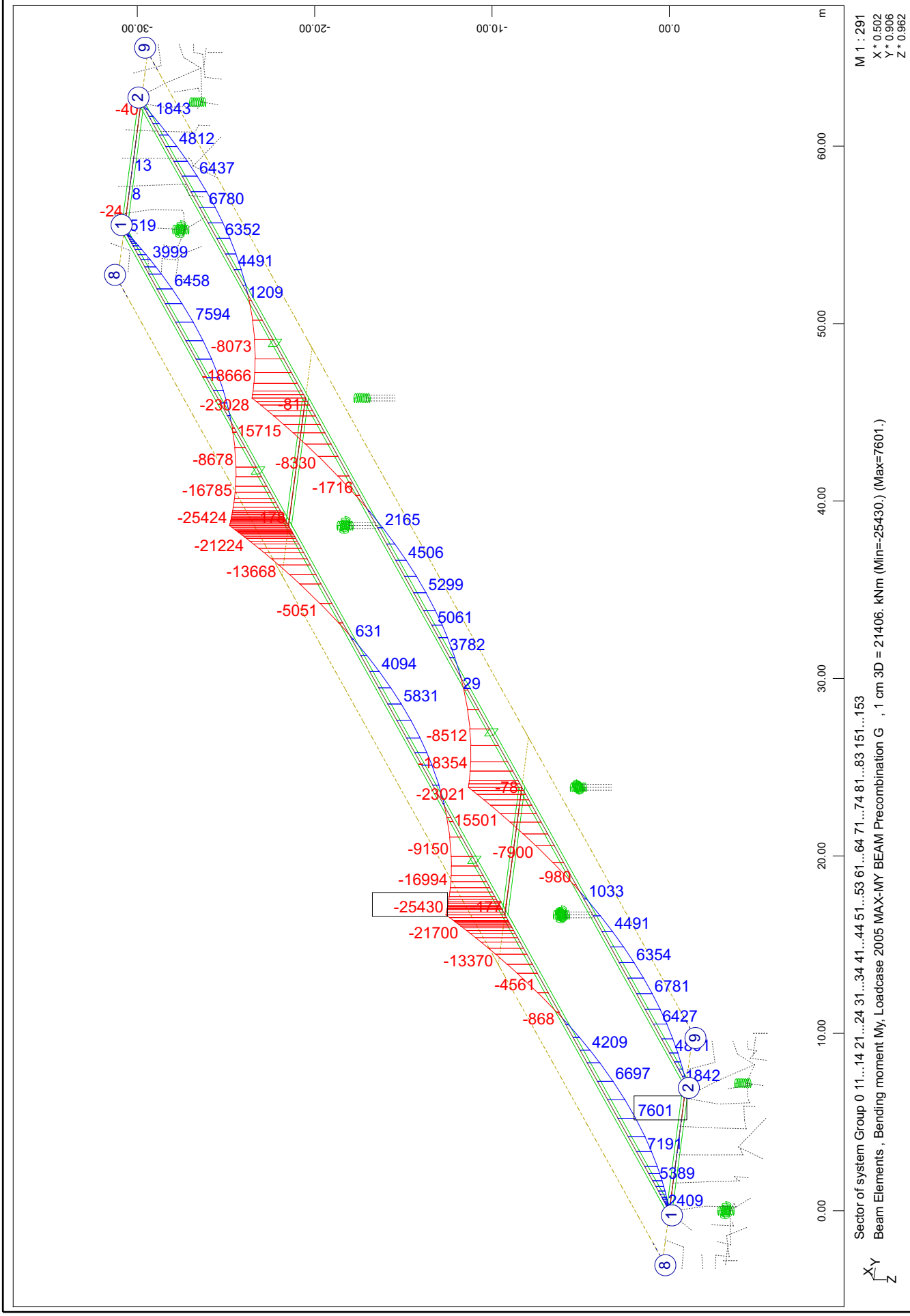

Composite bridge 38+50+38, b=14.25m, 2x2HL1100R HISTAR460 , slab 0.30m C30/37
Results for characteristic precombinations of loads: G=G1+G2

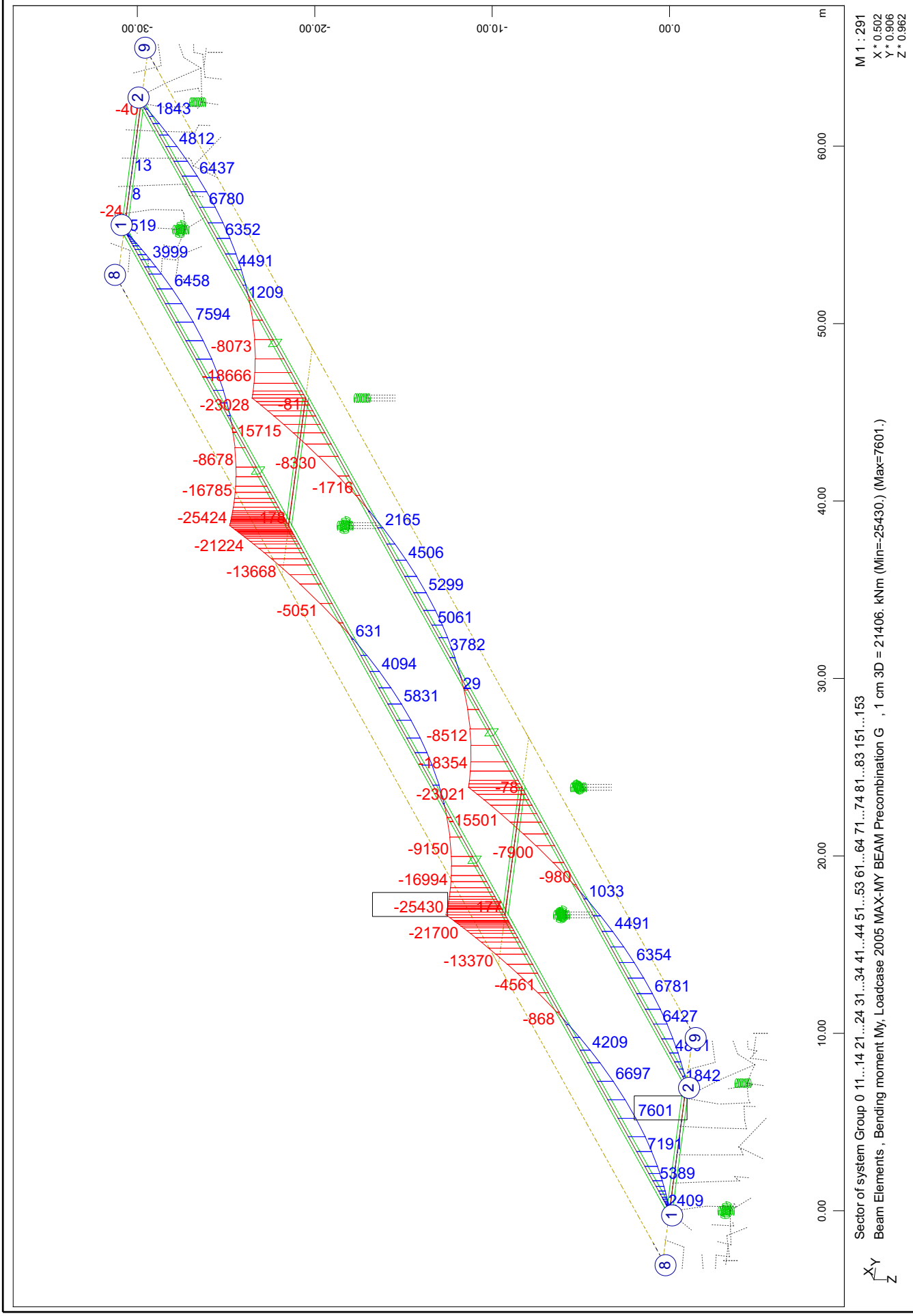

Composite bridge 38+50+38, b=14.25m, 2x2HL1100R HISTAR460 , slab 0.30m C30/37
Results for characteristic precombinations of loads: C=C1+C2

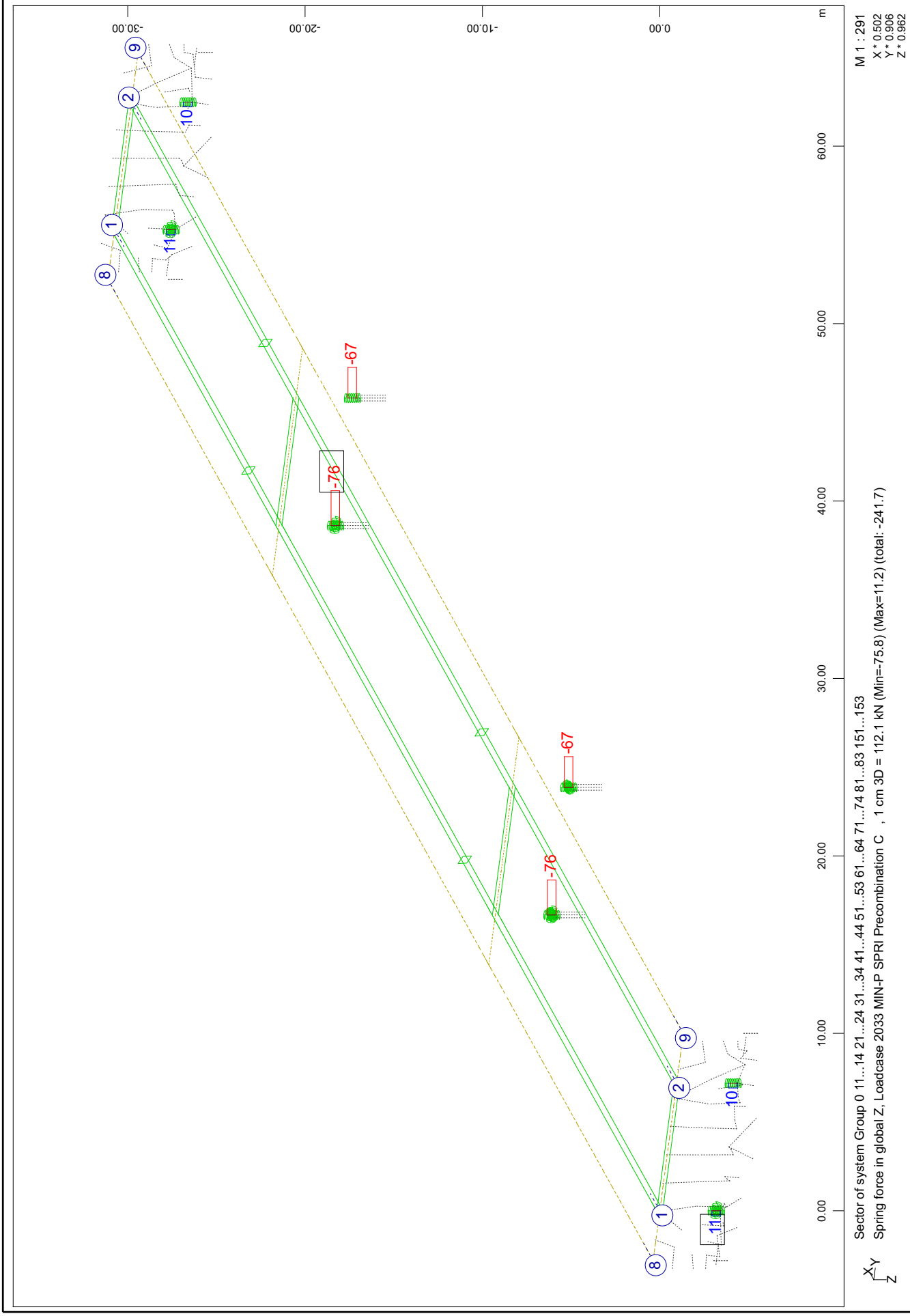

SOFiSTiK AG - www.sofistik.de

Composite bridge 38+50+38, b=14.25m, 2x2HL1100R HISTAR460 , slab 0.30m C30/37
Results for characteristic precombinations of loads: C=C1+C2

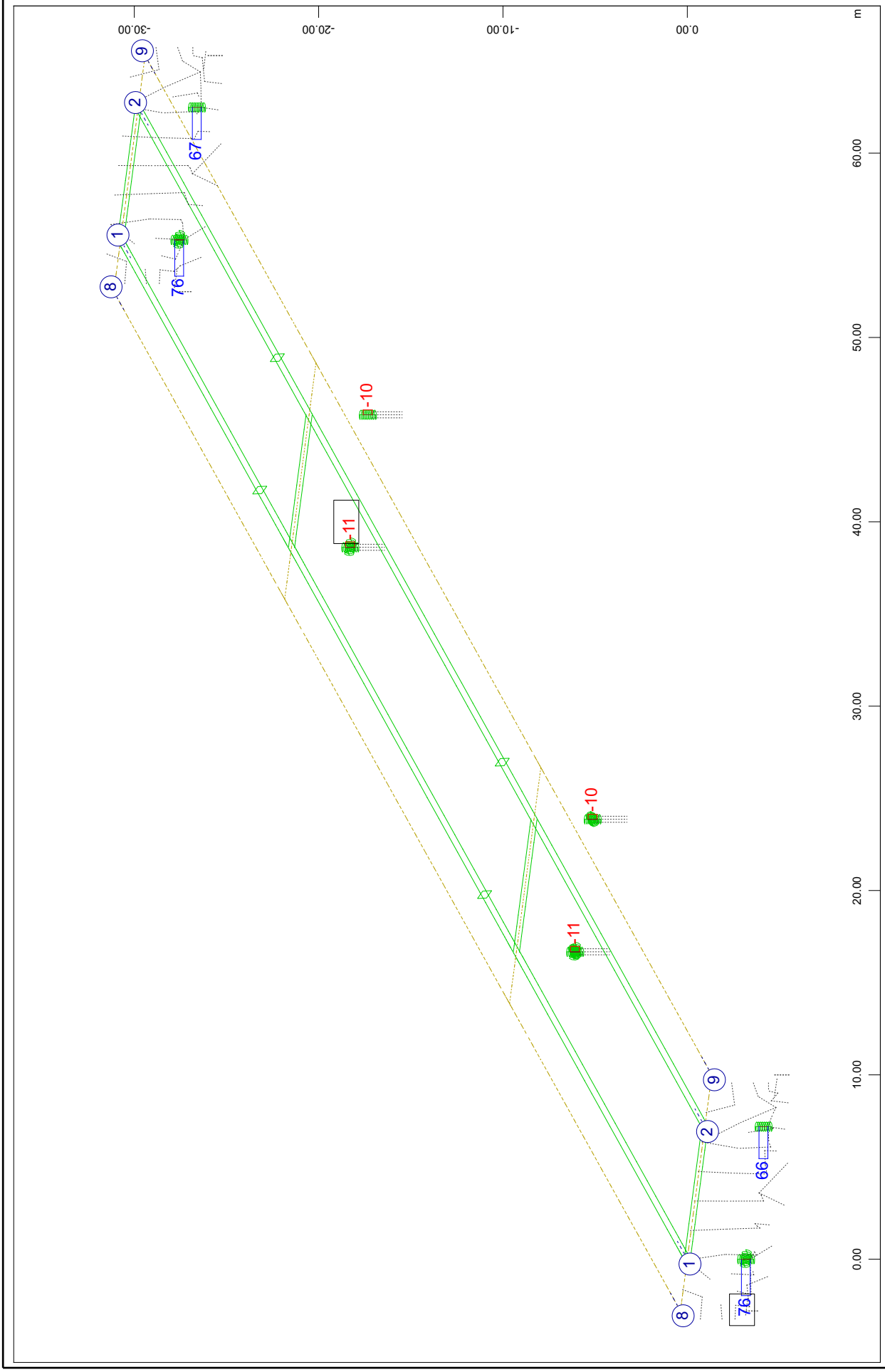

SOFiSTiK AG - www.sofistik.de

Composite bridge 38+50+38, b=14.25m, 2x2HL1100R HISTAR460 , slab 0.30m C30/37
Results for characteristic precombinations of loads: C=C1+C2

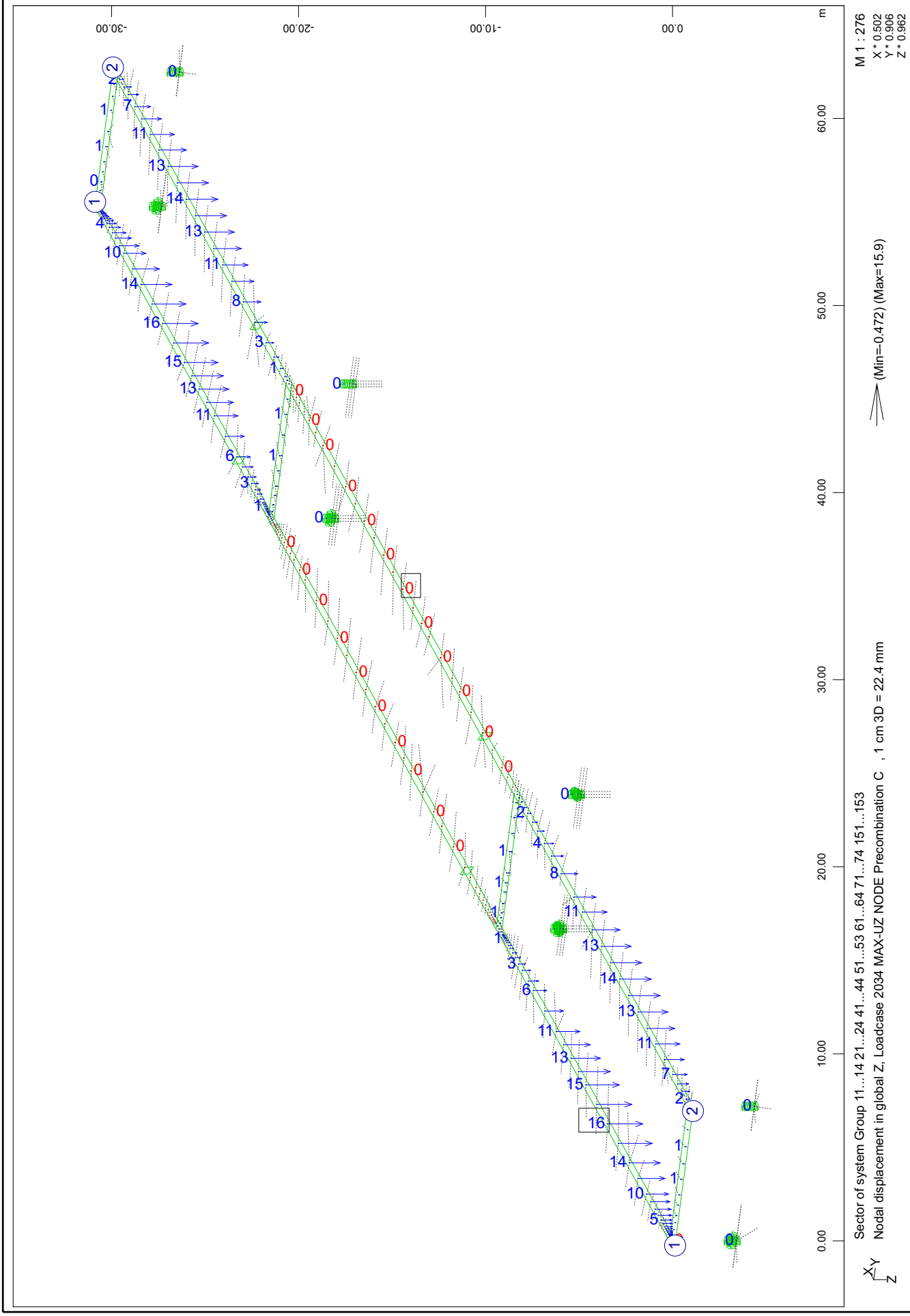

SOFiSTiK AG - www.sofistik.de

Composite bridge 38+50+38, b=14.25m, 2x2HL1100R HISTAR460 , slab 0.30m C30/37
Results for characteristic precombinations of loads: C=C1+C2

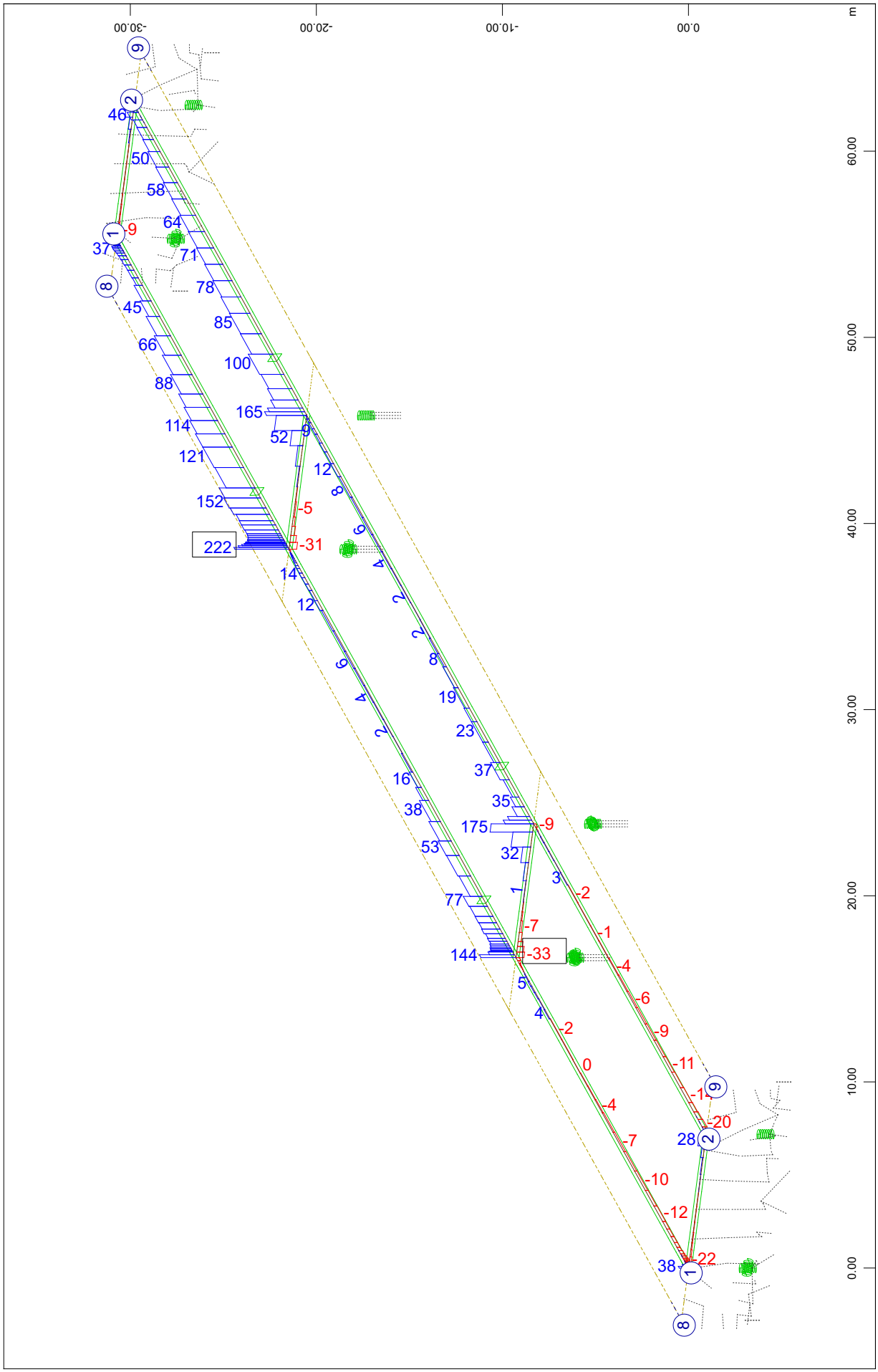

Composite bridge 38+50+38, b=14.25m, 2x2HL1100R HISTAR460 , slab 0.30m C30/37
Results for characteristic precombinations of loads: C=C1+C2

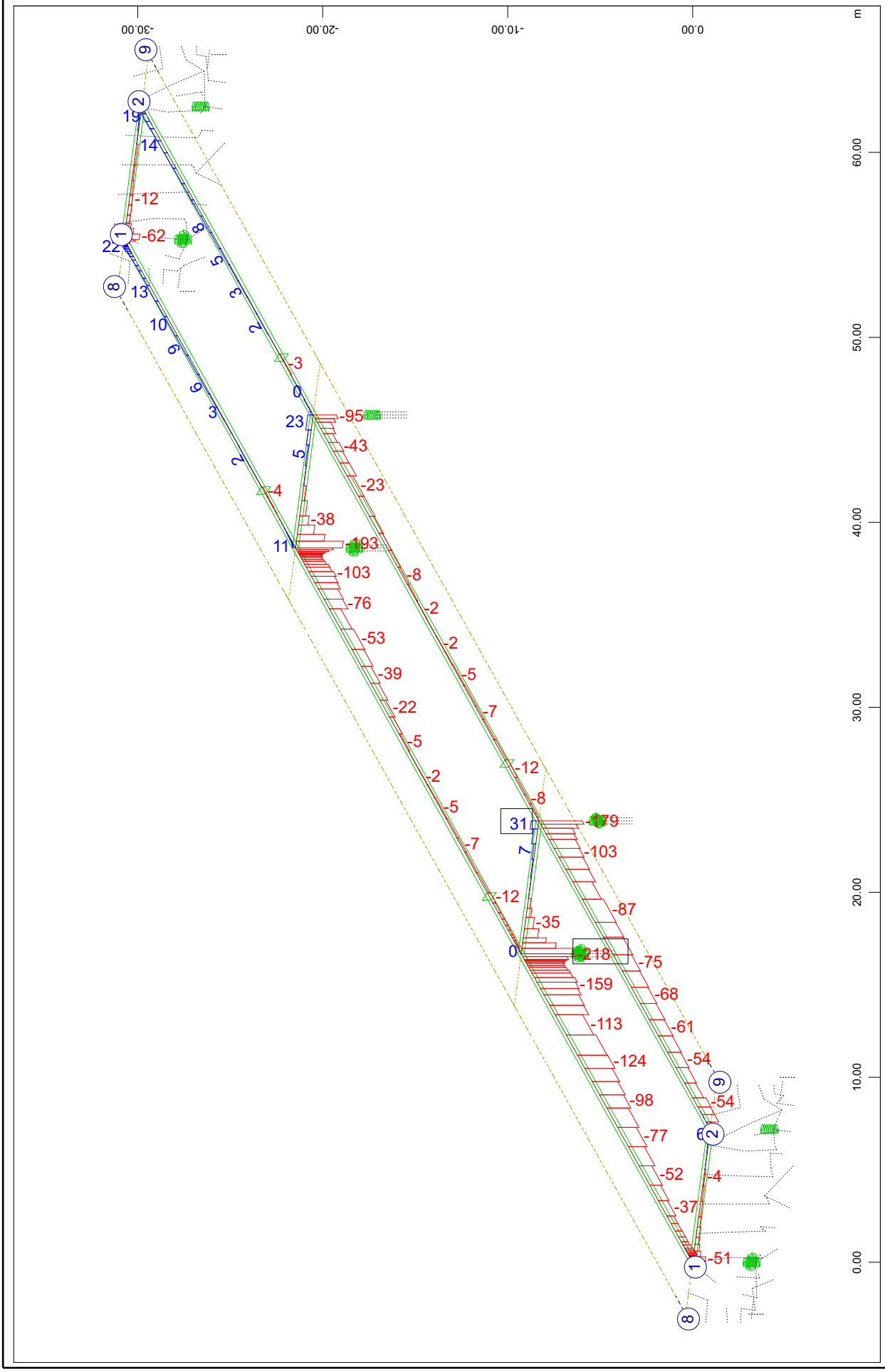

Composite bridge 38+50+38, b=14.25m, 2x2HL1100R HISTAR460 , slab 0.30m C30/37
Results for characteristic precombinations of loads: C=C1+C2

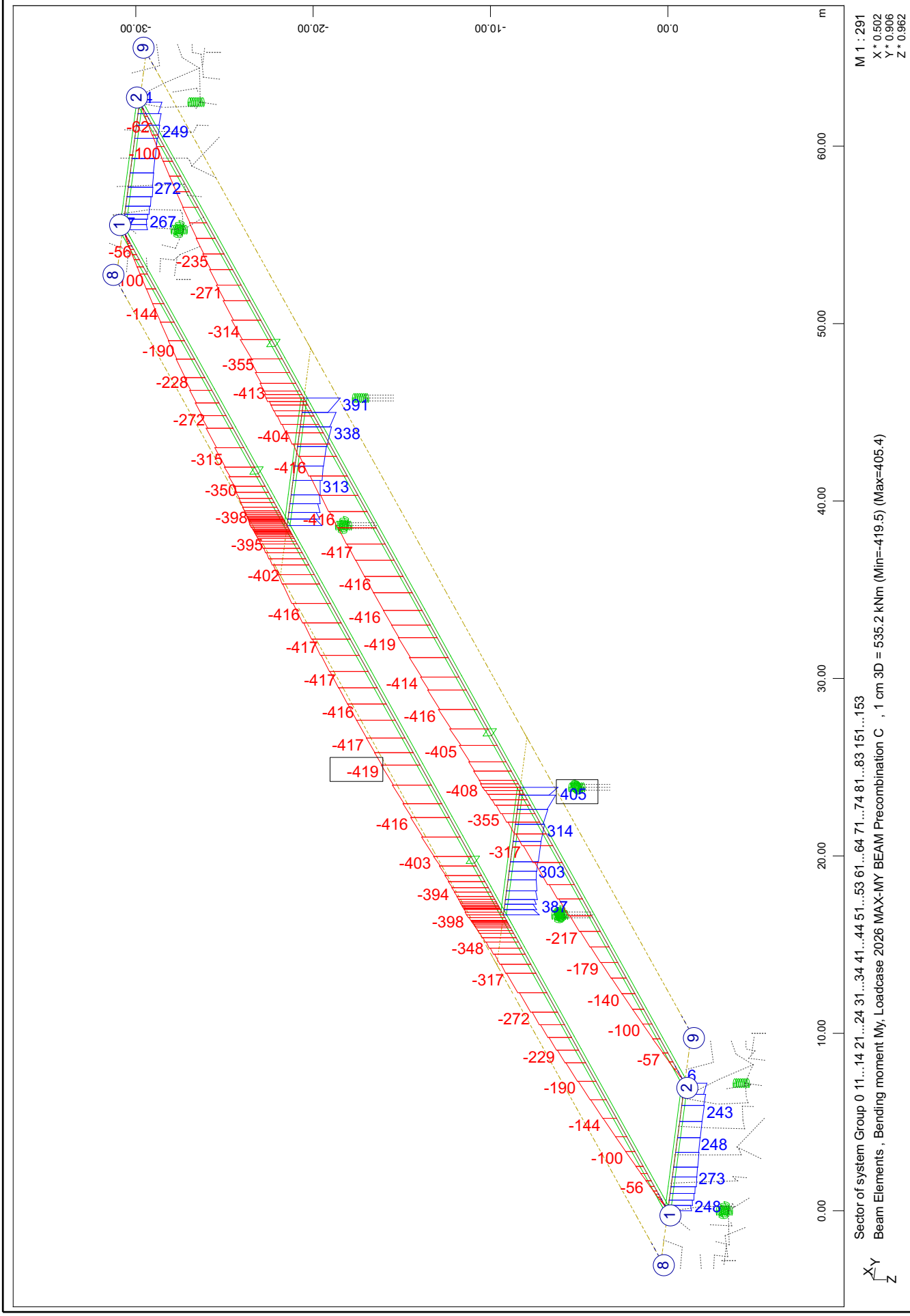

Composite bridge 38+50+38, b=14.25m, 2x2HL1100R HISTAR460 , slab 0.30m C30/37
Results for characteristic precombinations of loads: C=C1+C2

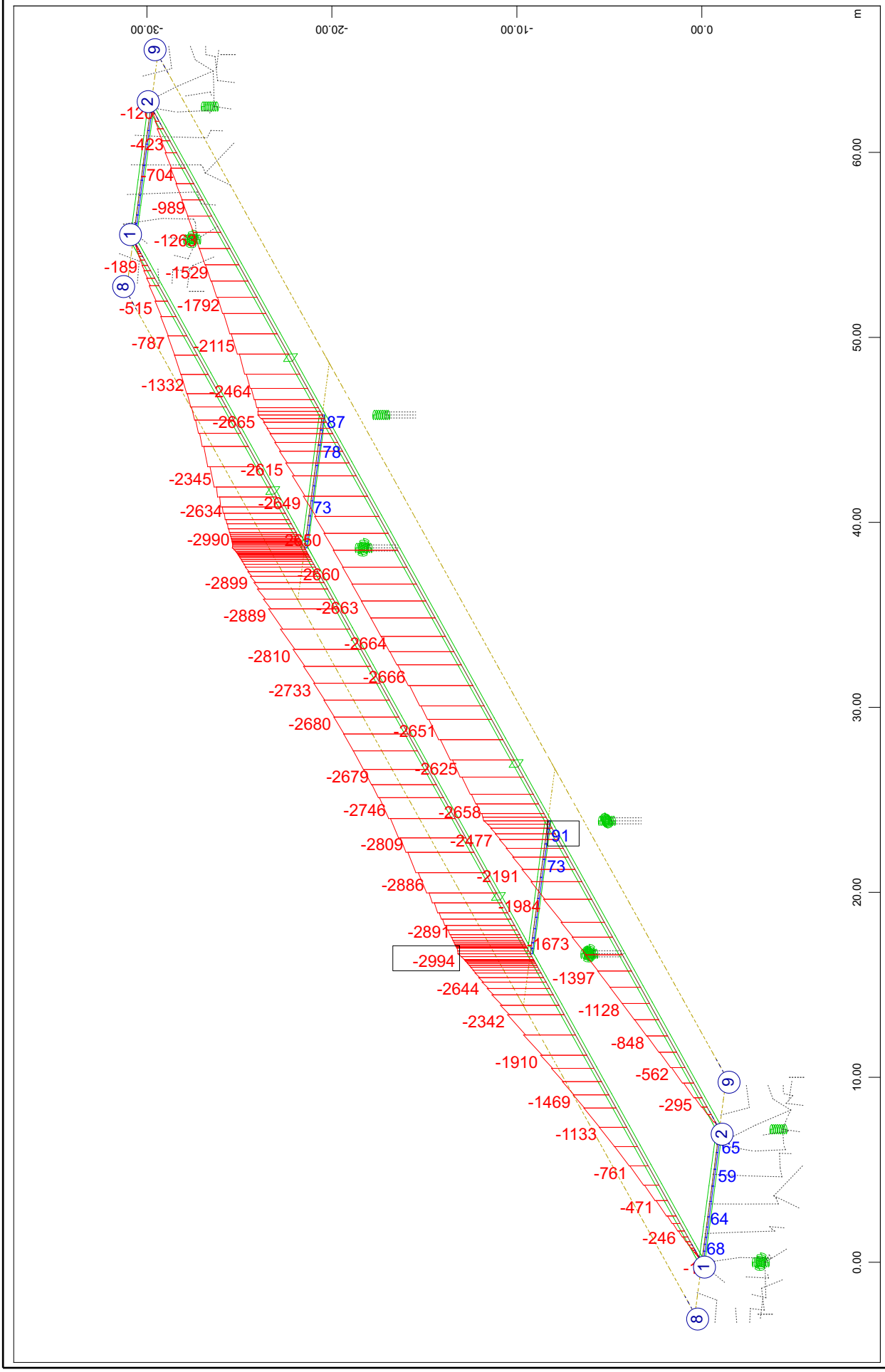

SOFiSTiK AG - www.sofistik.de

Composite bridge 38+50+38, b=14.25m, 2x2HL1100R HISTAR460 , slab 0.30m C30/37
Results for characteristic precombinations of loads: Vertical loads gr1a (LM1)

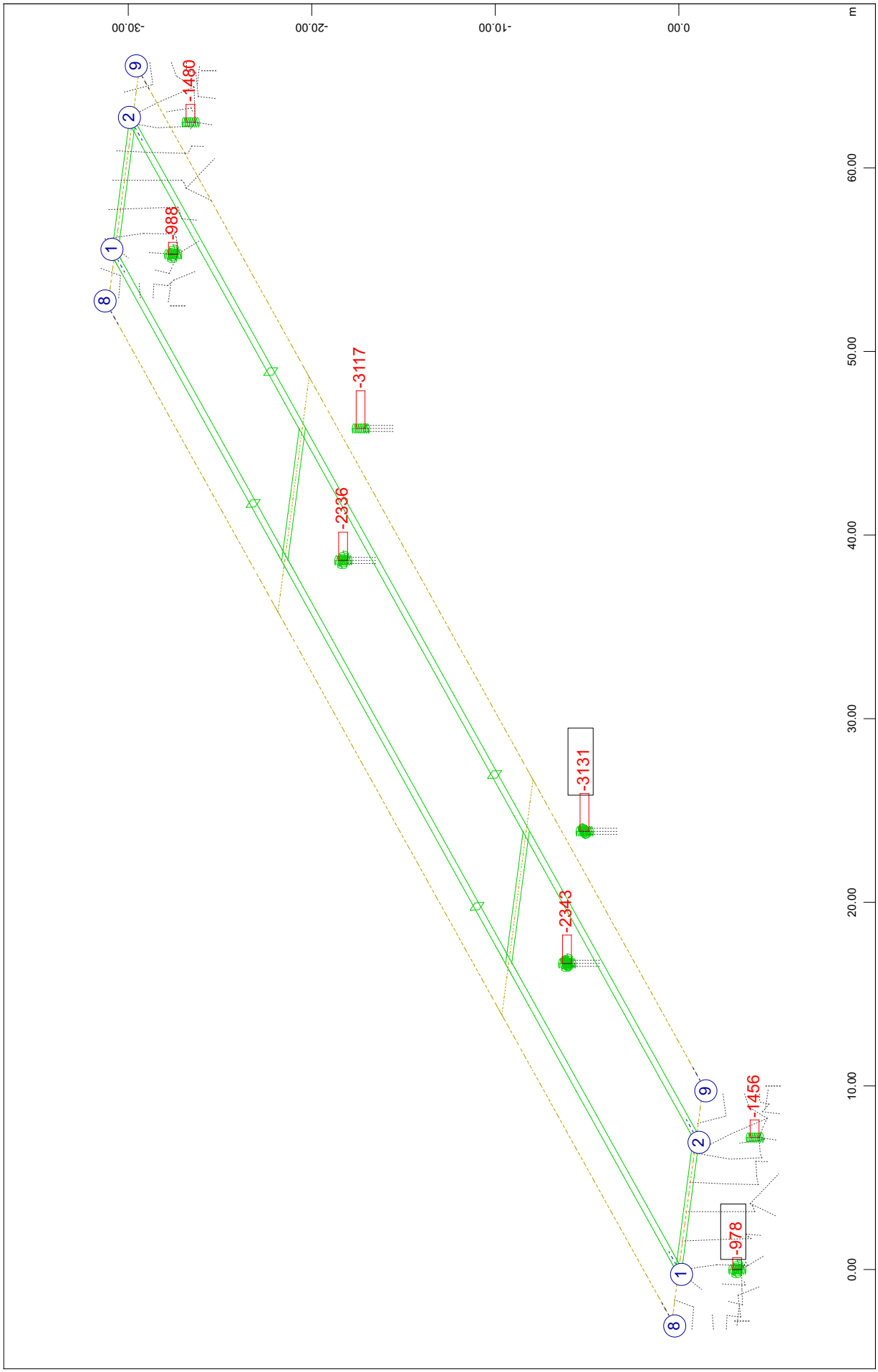

SOFiSTiK AG - www.sofistik.de

Composite bridge 38+50+38, b=14.25m, 2x2HL1100R HISTAR460 , slab 0.30m C30/37
Results for characteristic precombinations of loads: Vertical loads gr1a (LM1)

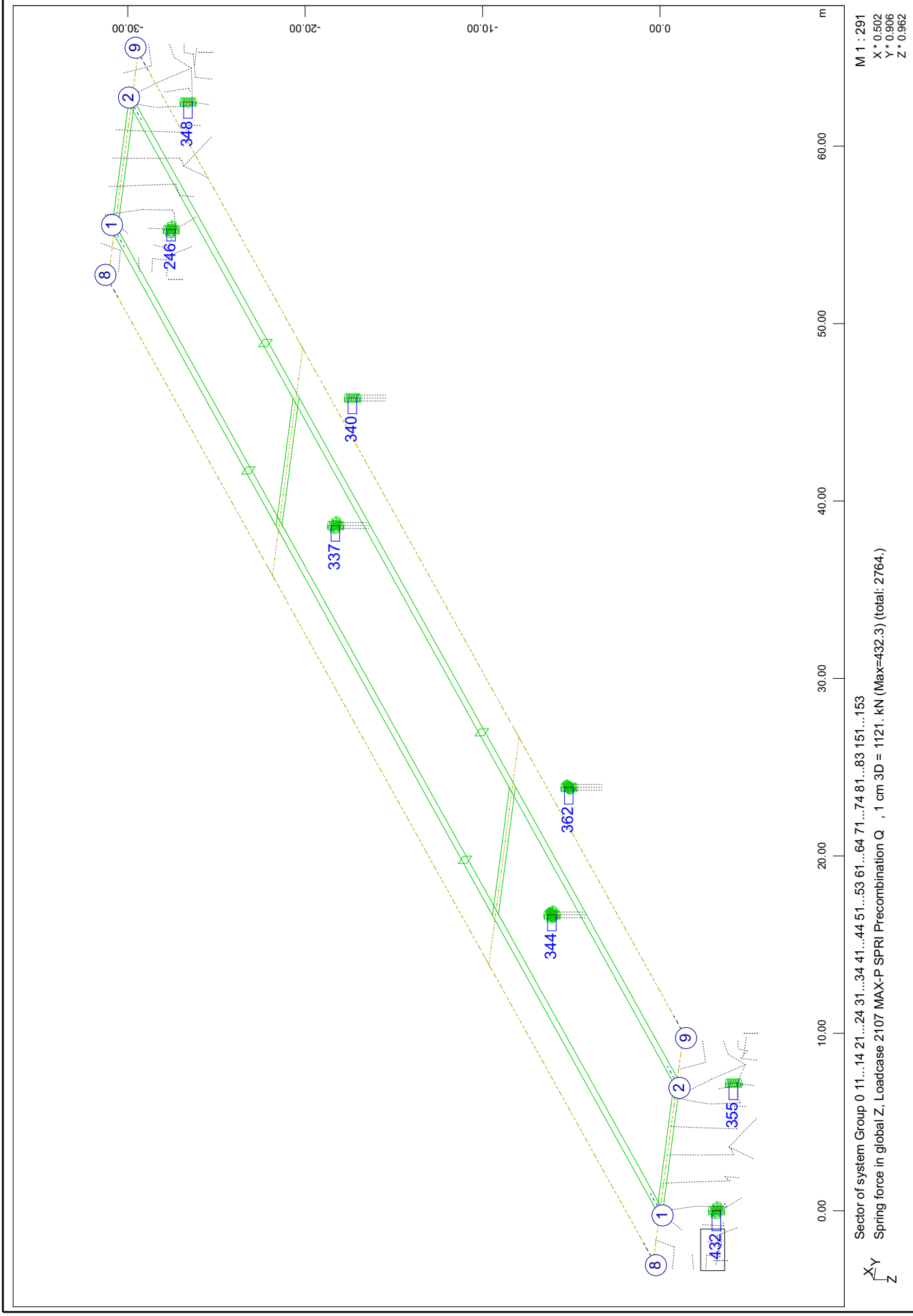

SOFiSTiK AG - www.sofistik.de

Composite bridge 38+50+38, b=14.25m, 2x2HL1100R HISTAR460 , slab 0.30m C30/37
Results for characteristic precombinations of loads: Vertical loads gr1a (LM1)

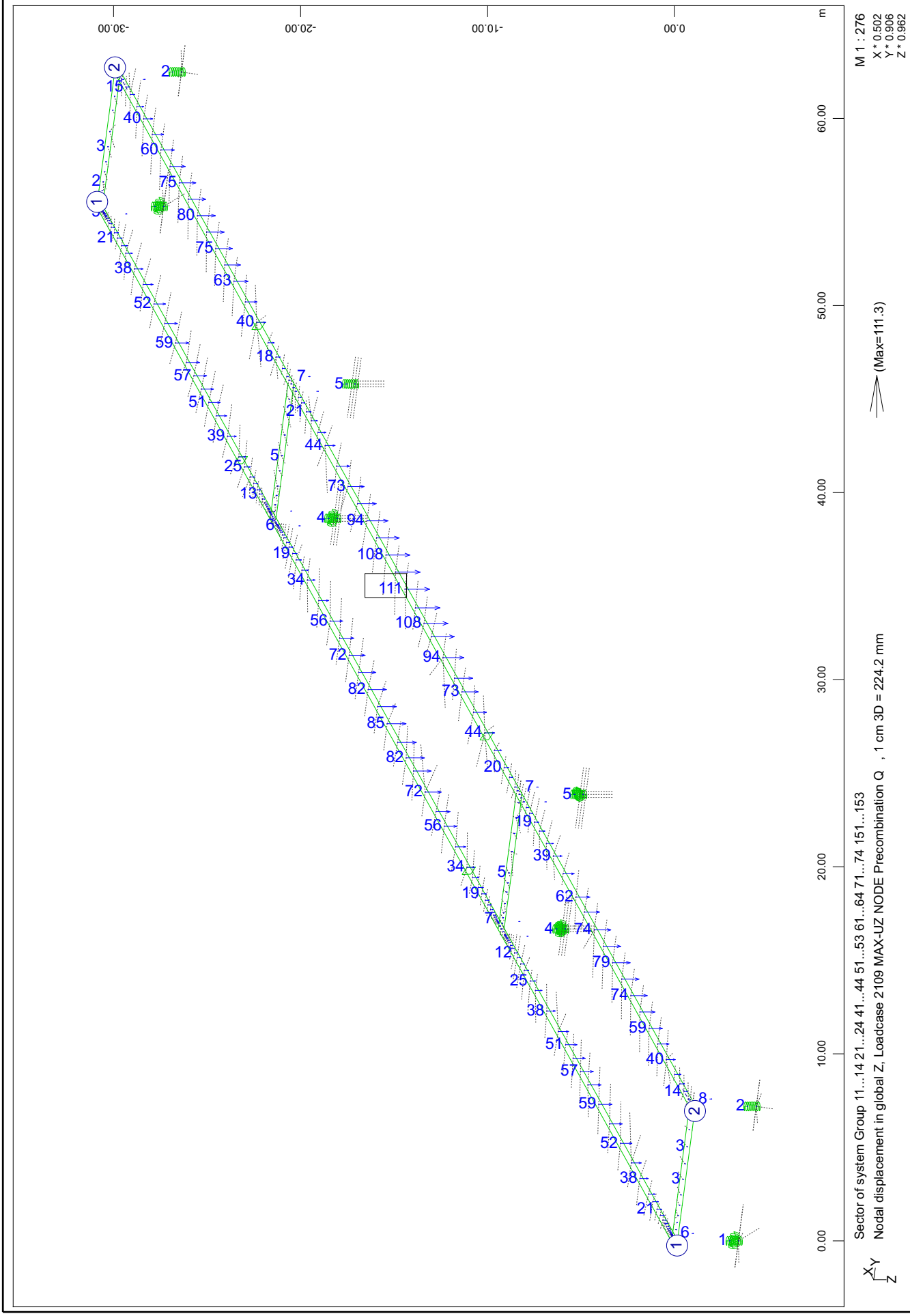

SOFiSTiK AG - www.sofistik.de

Composite bridge 38+50+38, b=14.25m, 2x2HL1100R HISTAR460 , slab 0.30m C30/37
Results for characteristic precombinations of loads: Vertical loads gr1a (LM1)

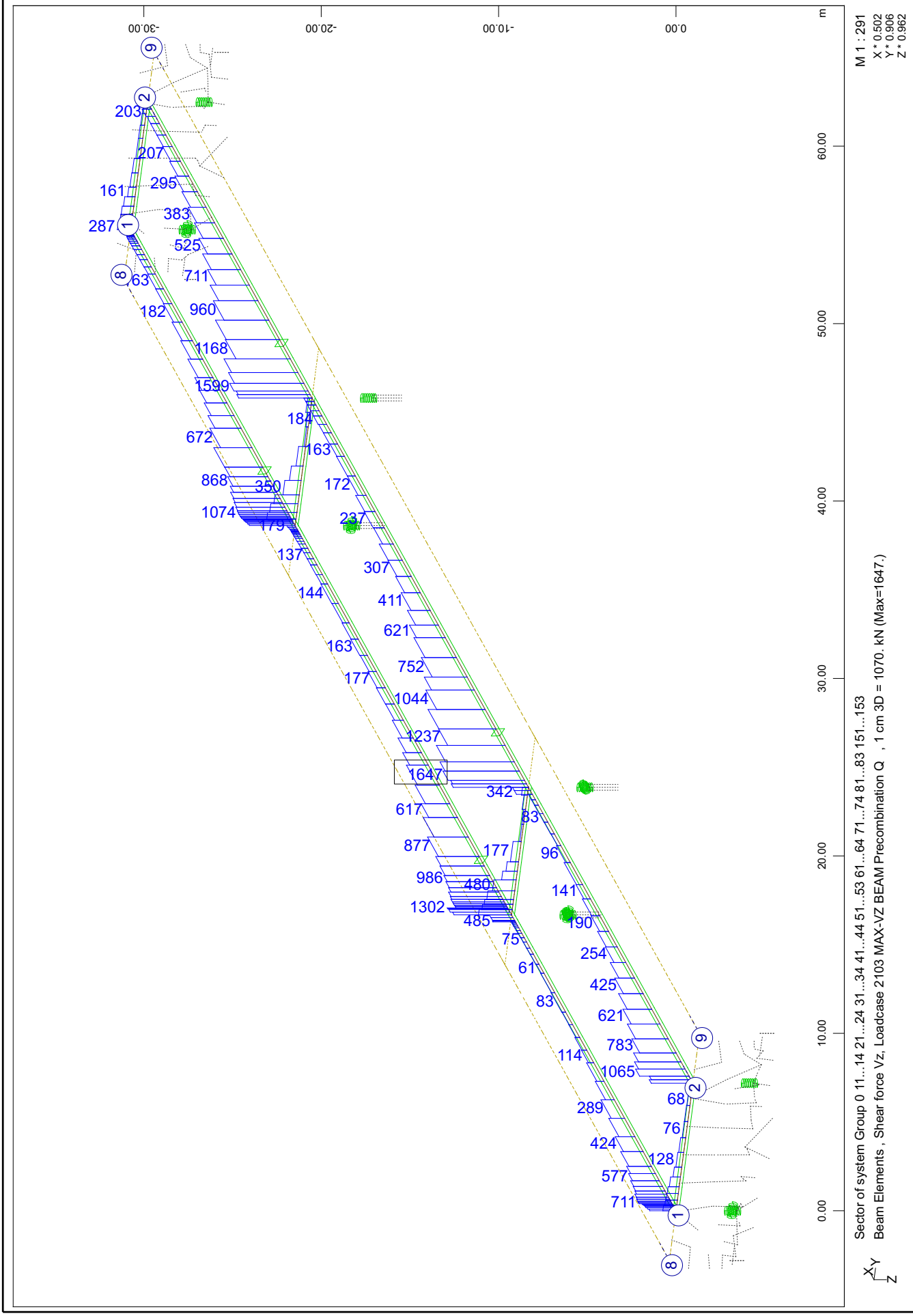

Composite bridge 38+50+38, b=14.25m, 2x2HL1100R HISTAR460 , slab 0.30m C30/37
Results for characteristic precombinations of loads: Vertical loads gr1a (LM1)

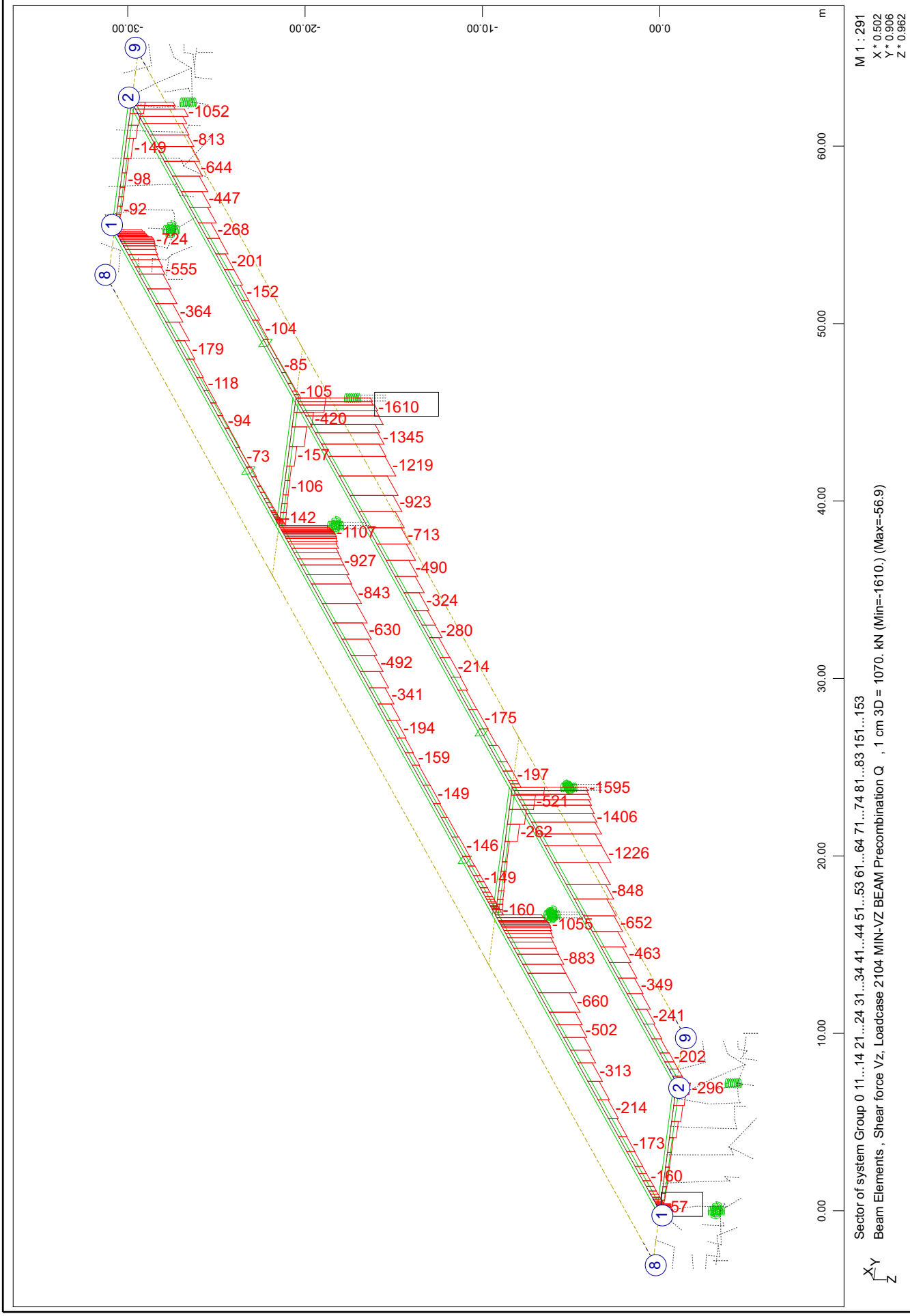

Composite bridge 38+50+38, b=14.25m, 2x2HL1100R HISTAR460 , slab 0.30m C30/37
Results for characteristic precombinations of loads: Vertical loads gr1a (LM1)

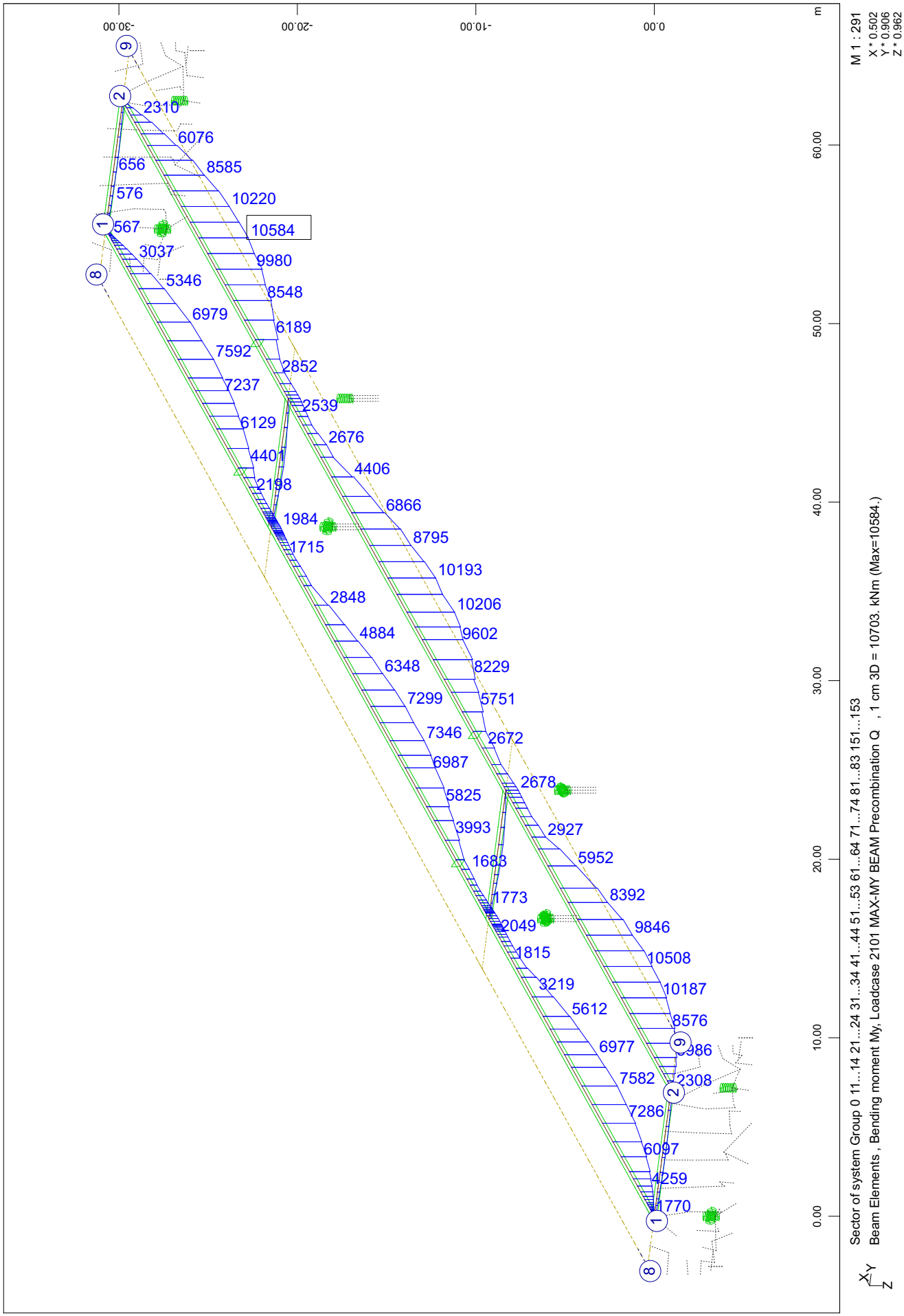

SOFiSTiK AG - www.sofistik.de

Composite bridge 38+50+38, b=14.25m, 2x2HL1100R HISTAR460 , slab 0.30m C30/37
Results for characteristic precombinations of loads: Vertical loads gr1a (LM1)

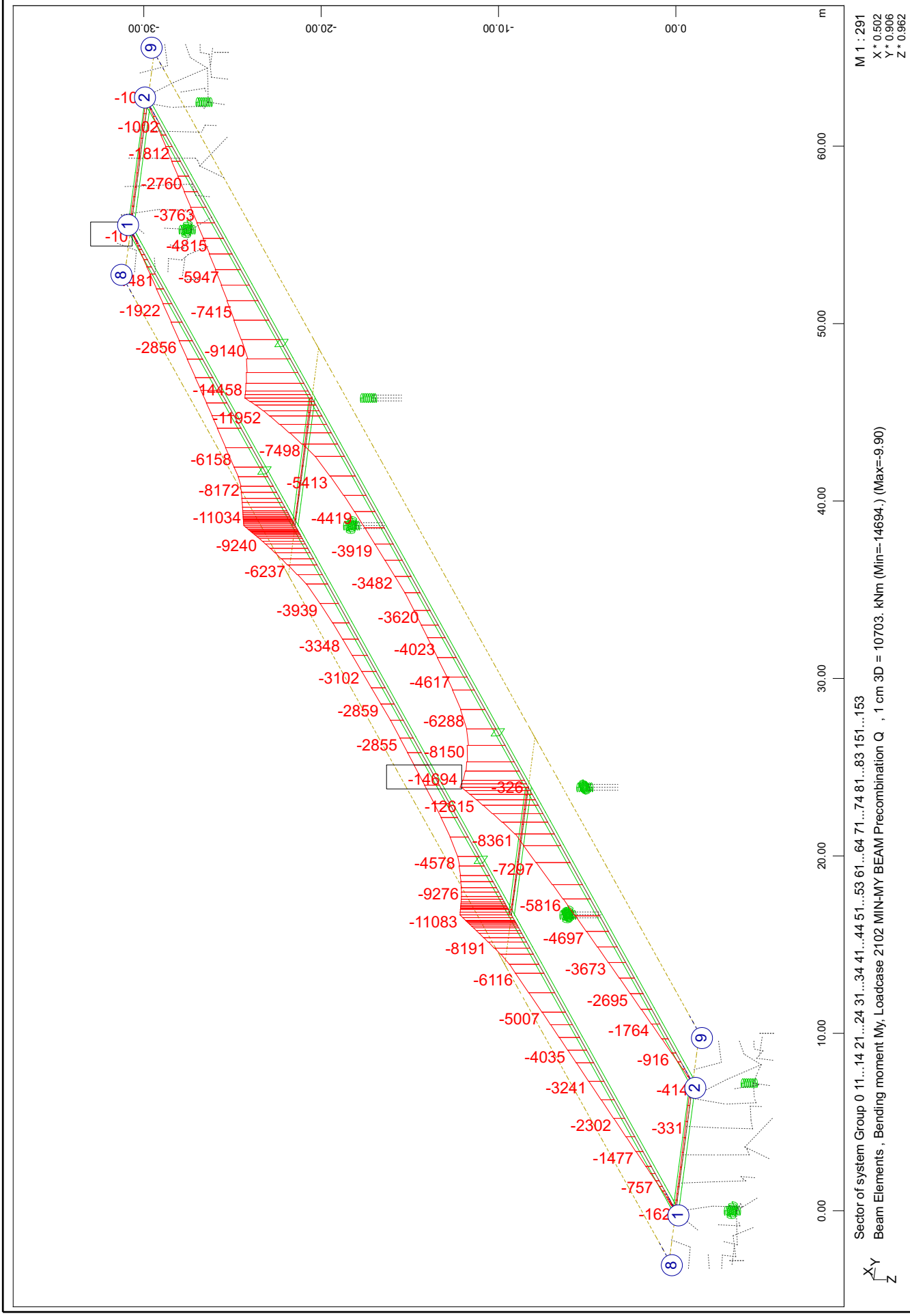

Composite bridge 38+50+38, b=14.25m, 2x2HL1100R HISTAR460 , slab 0.30m C30/37
Results for characteristic precombinations of loads: Vertical loads gr1a (LM1)

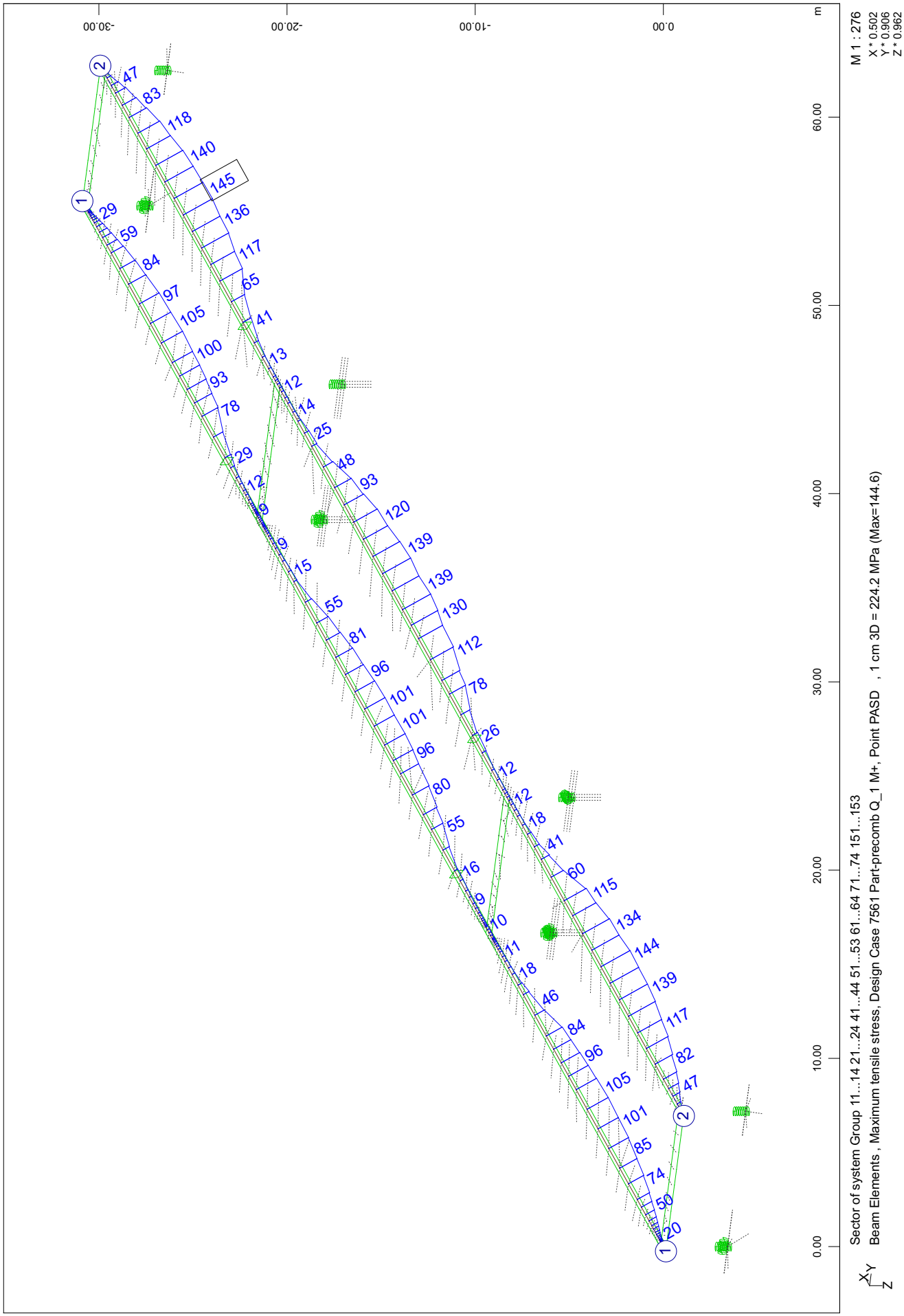

Composite bridge 38+50+38, b=14.25m, 2x2HL1100R HISTAR460 , slab 0.30m C30/37
Results for characteristic precombinations of loads: Vertical loads gr1a (LM1)

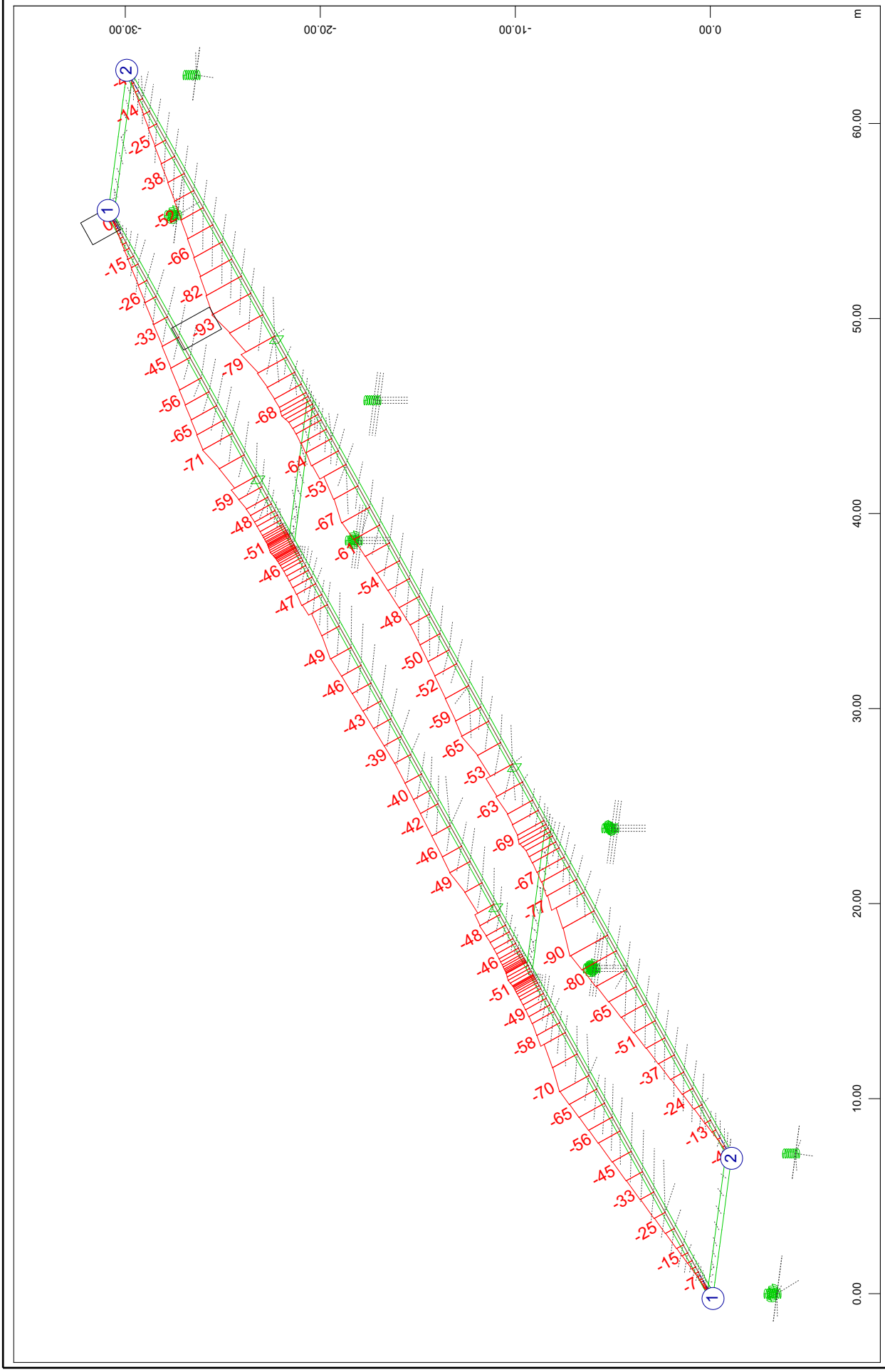

SOFiSTiK AG - www.sofistik.de

Composite bridge 38+50+38, b=14.25m, 2x2HL1100R HISTAR460 , slab 0.30m C30/37
Results for characteristic precombinations of loads: Vertical loads gr1a (LM1)

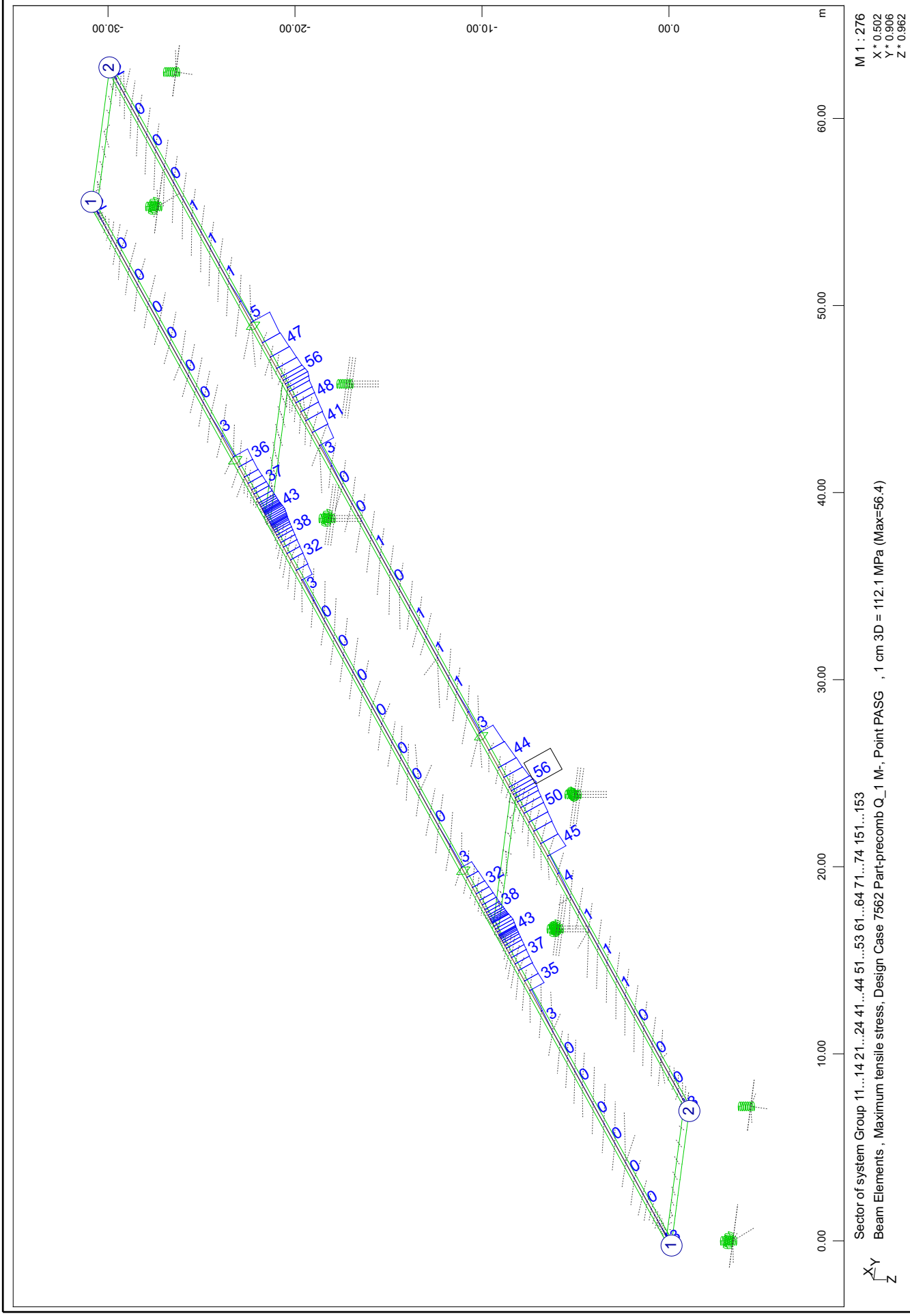

Composite bridge 38+50+38, b=14.25m, 2x2HL1100R HISTAR460 , slab 0.30m C30/37
Results for characteristic precombinations of loads: Vertical loads gr1a (LM1)

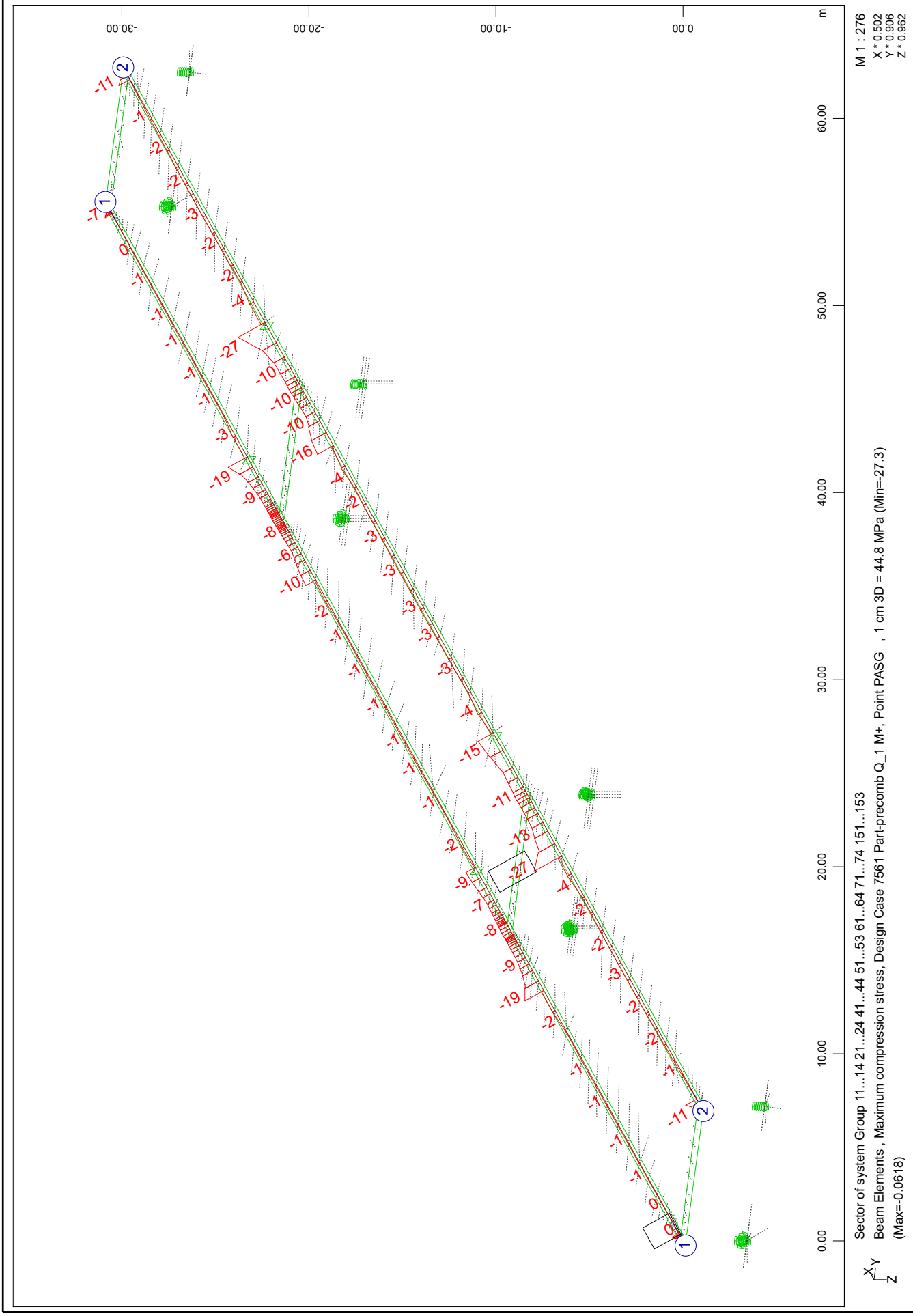

SOFiSTiK AG - www.sofistik.de

Composite bridge 38+50+38, b=14.25m, 2x2HL1100R HISTAR460 , slab 0.30m C30/37
Results for characteristic precombinations of loads: Vertical loads gr1a (LM1)

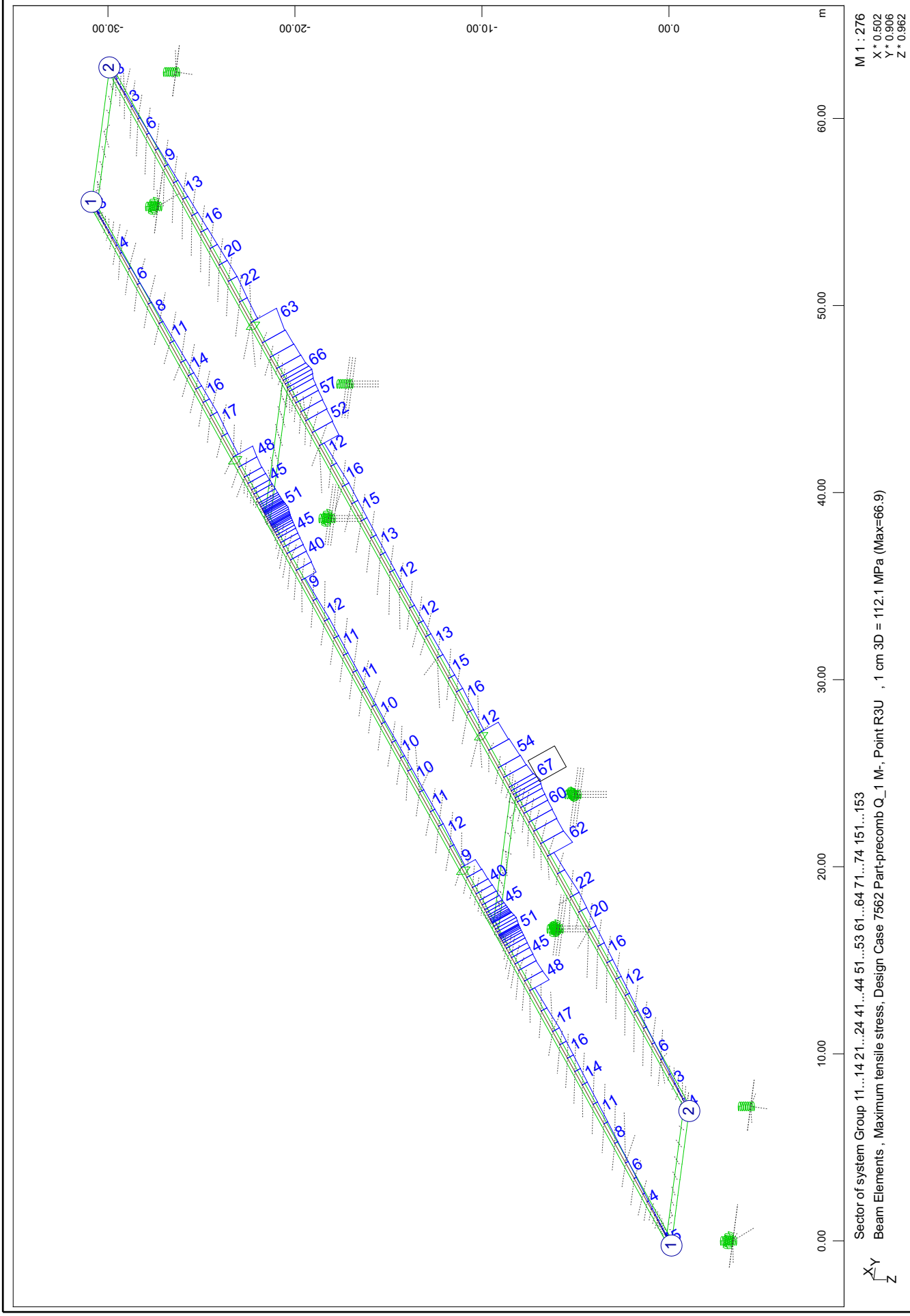

Composite bridge 38+50+38, b=14.25m, 2x2HL1100R HISTAR460 , slab 0.30m C30/37
Results for characteristic precombinations of loads: Vertical loads gr1a (LM1)

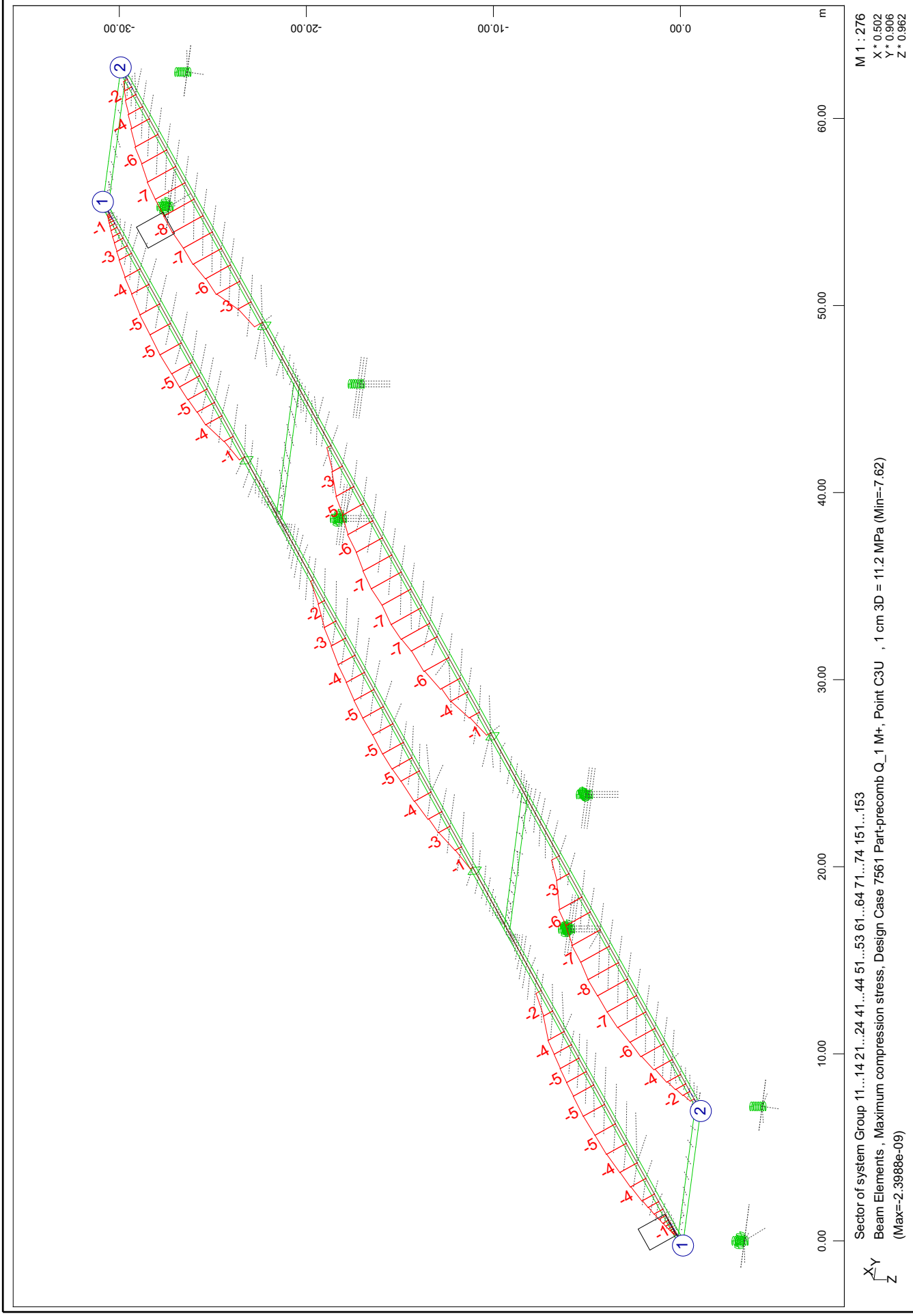

Composite bridge 38+50+38, b=14.25m, 2x2HL1100R HISTAR460 , slab 0.30m C30/37
Results for characteristic precombinations of loads: Vertical loads gr1a (LM1)

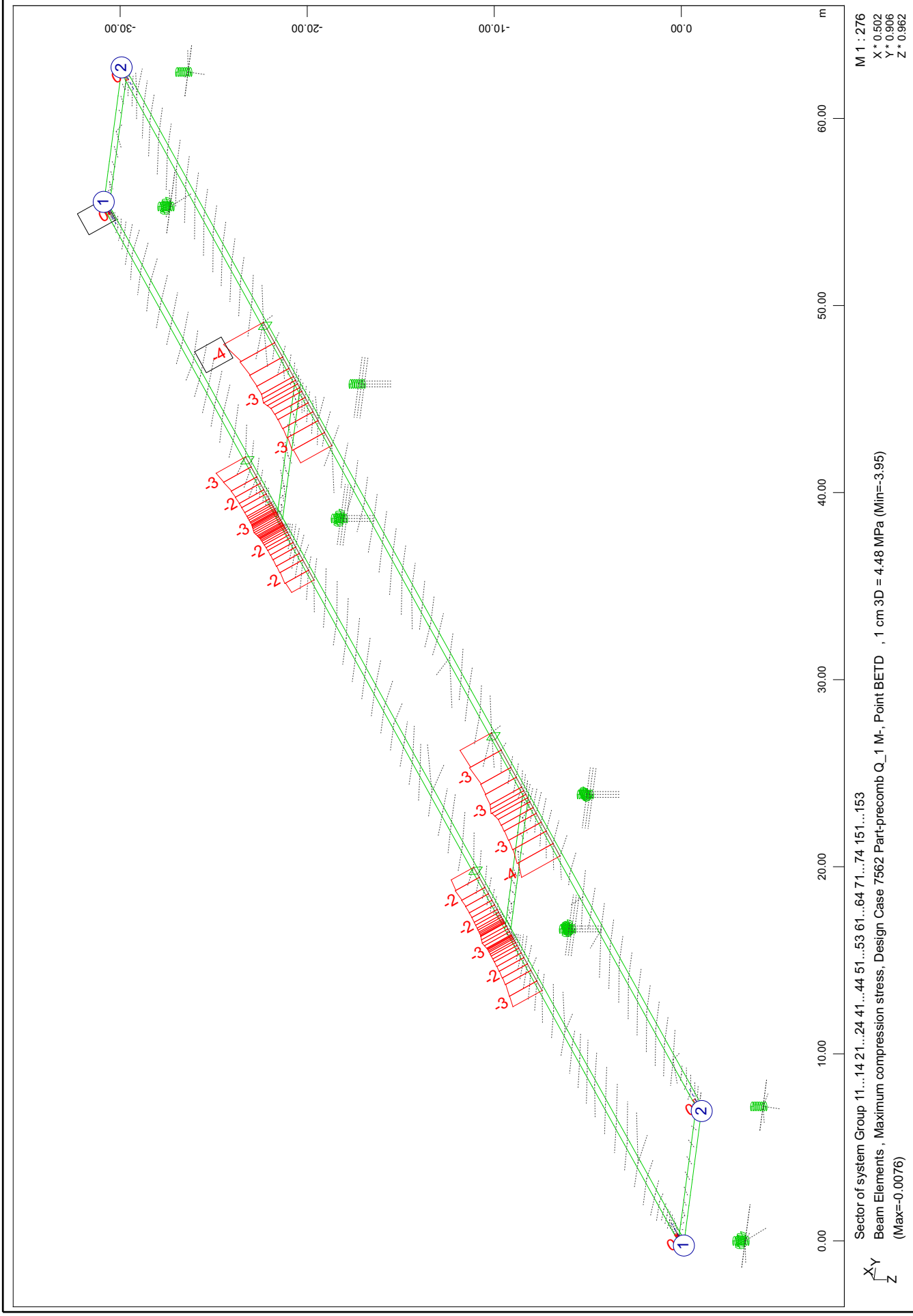

SOFiSTiK AG - www.sofistik.de

Composite bridge 38+50+38, b=14.25m, 2x2HL1100R HISTAR460 , slab 0.30m C30/37
Results for characteristic precombinations of loads: Settlements

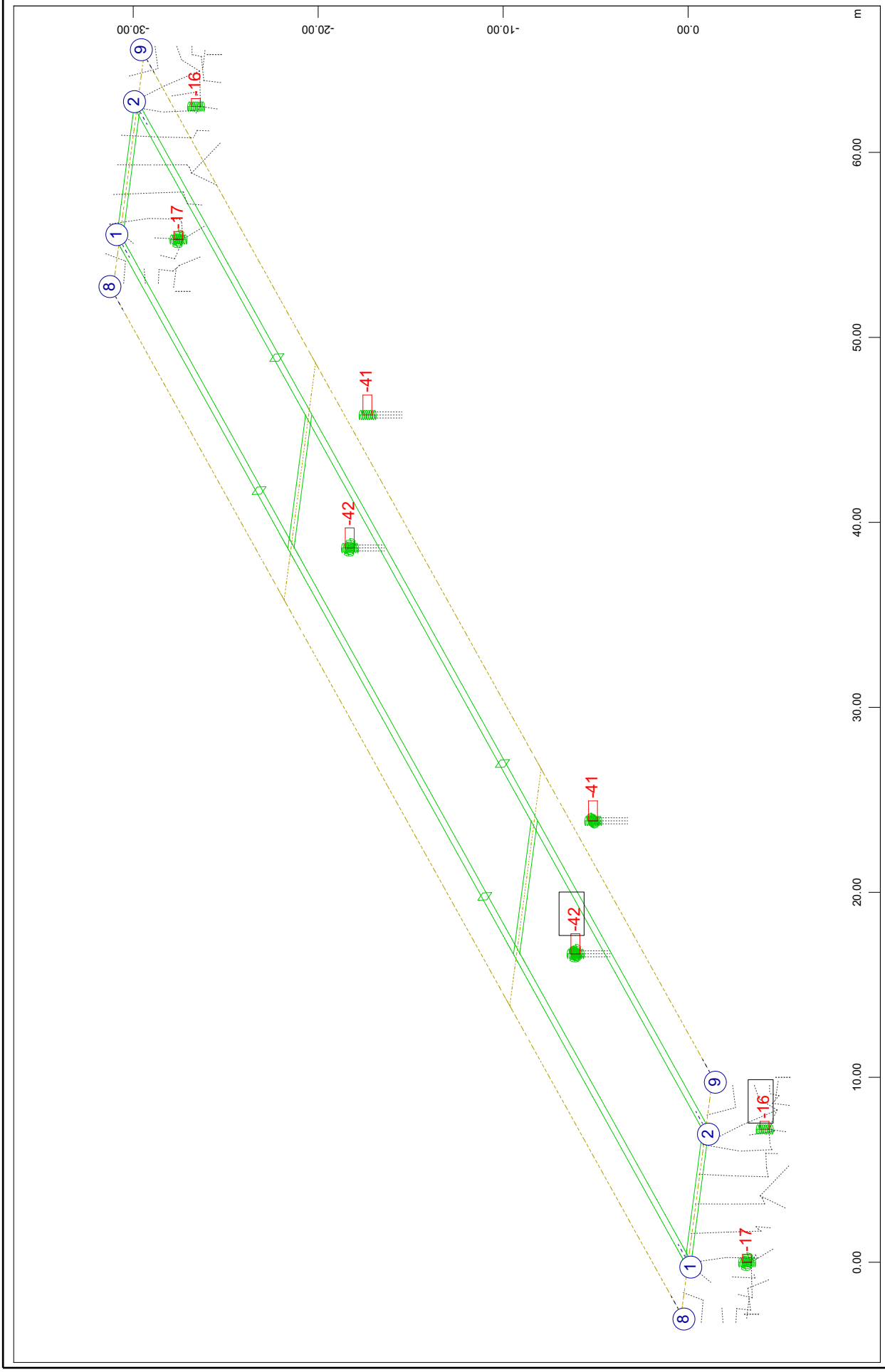

SOFiSTiK AG - www.sofistik.de

Composite bridge 38+50+38, b=14.25m, 2x2HL1100R HISTAR460 , slab 0.30m C30/37
Results for characteristic precombinations of loads: Settlements

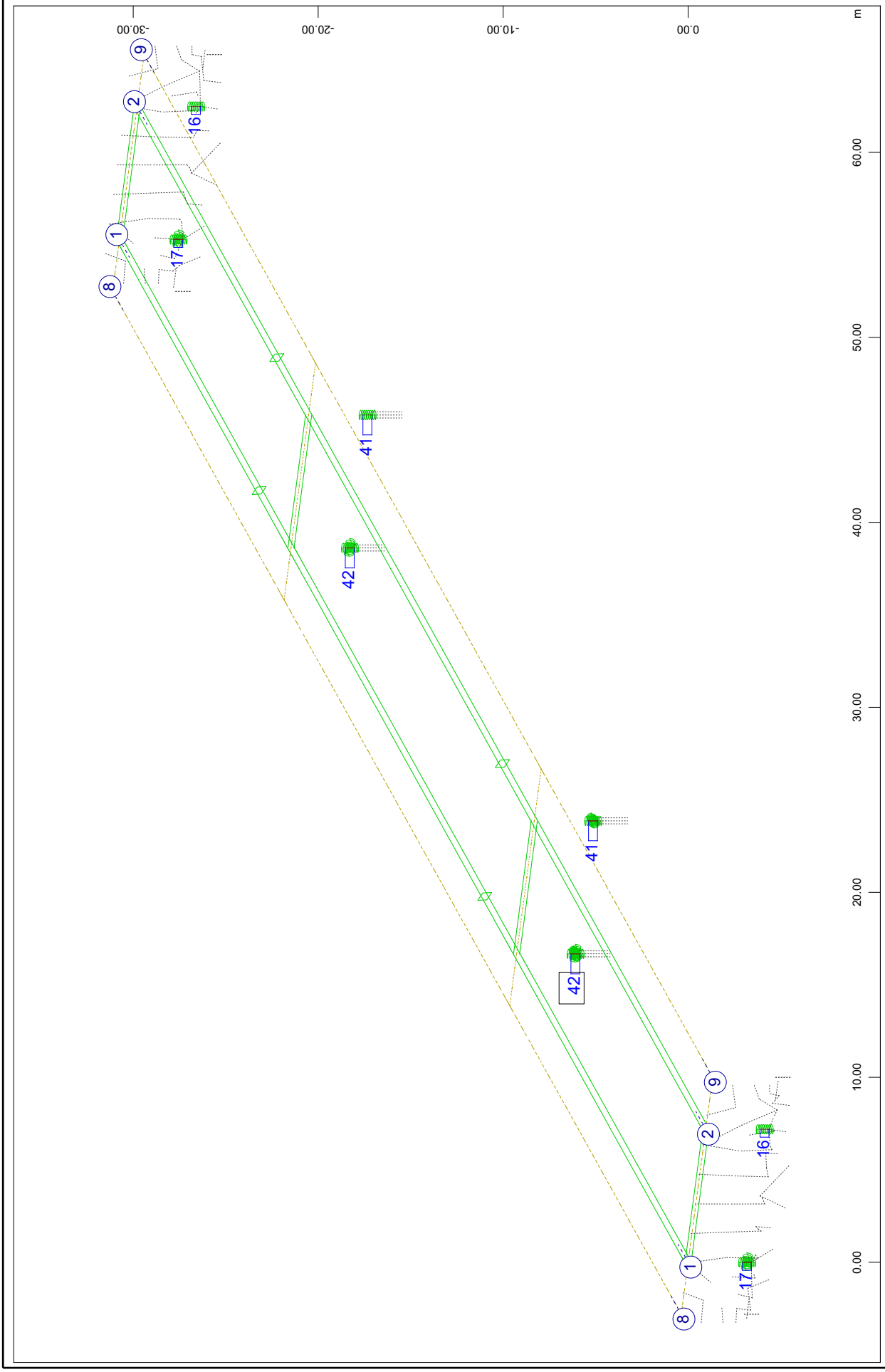

SOFiSTiK AG - www.sofistik.de

Composite bridge 38+50+38, b=14.25m, 2x2HL1100R HISTAR460 , slab 0.30m C30/37
Results for characteristic precombinations of loads: Settlements

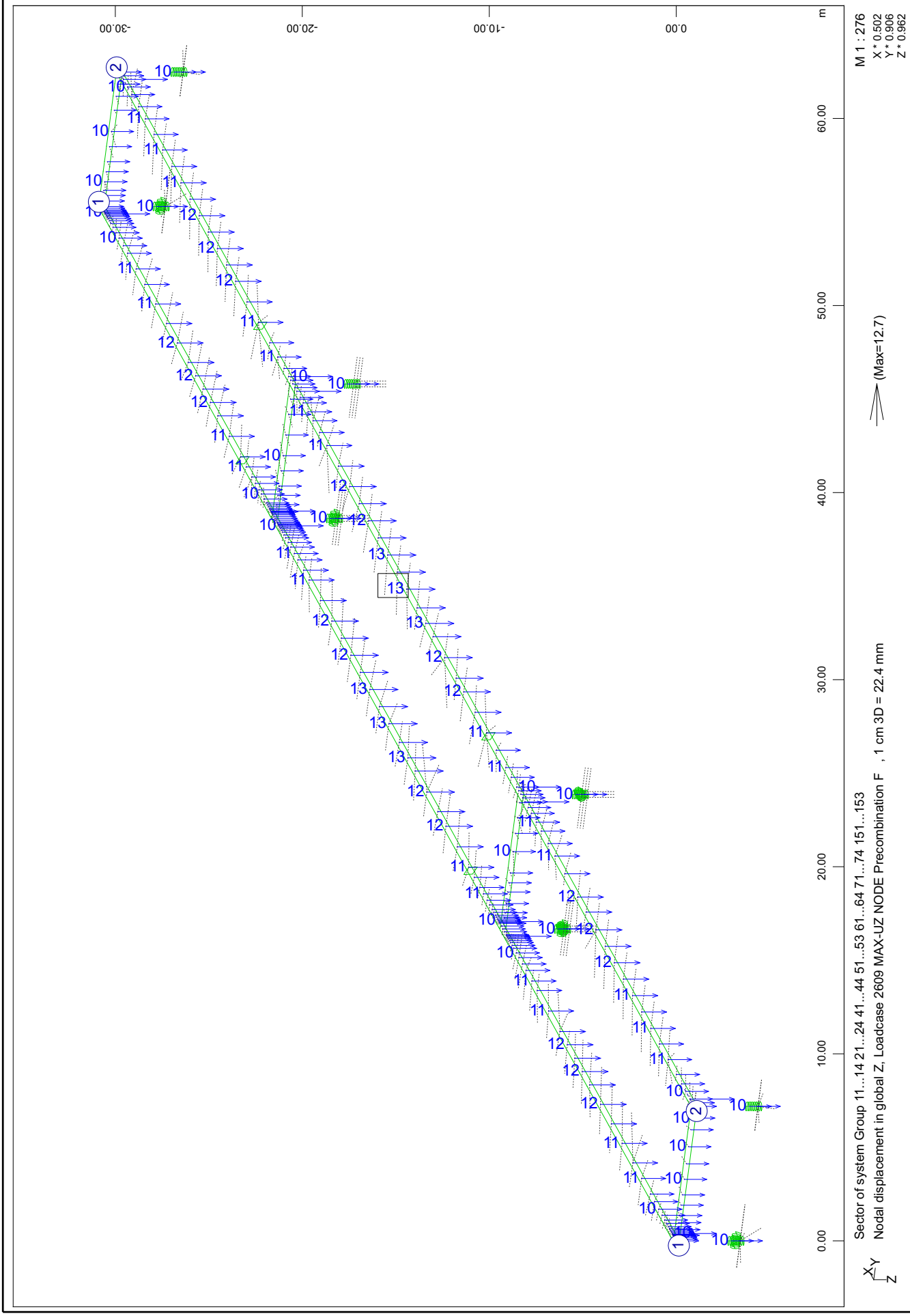

SOFiSTiK AG - www.sofistik.de

Composite bridge 38+50+38, b=14.25m, 2x2HL1100R HISTAR460 , slab 0.30m C30/37
Results for characteristic precombinations of loads: Settlements

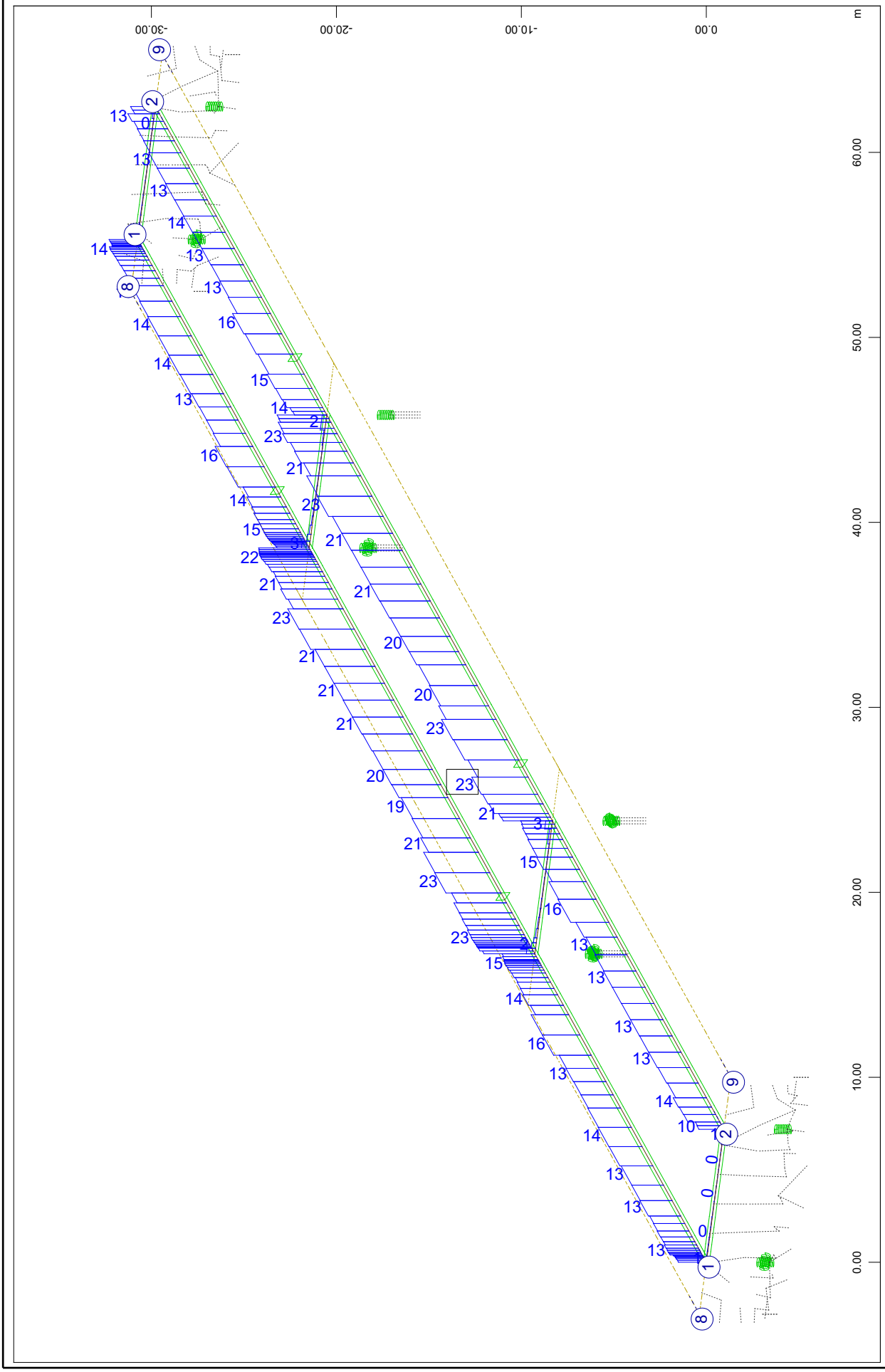

SOFiSTiK AG - www.sofistik.de

Composite bridge 38+50+38, b=14.25m, 2x2HL1100R HISTAR460 , slab 0.30m C30/37
Results for characteristic precombinations of loads: Settlements

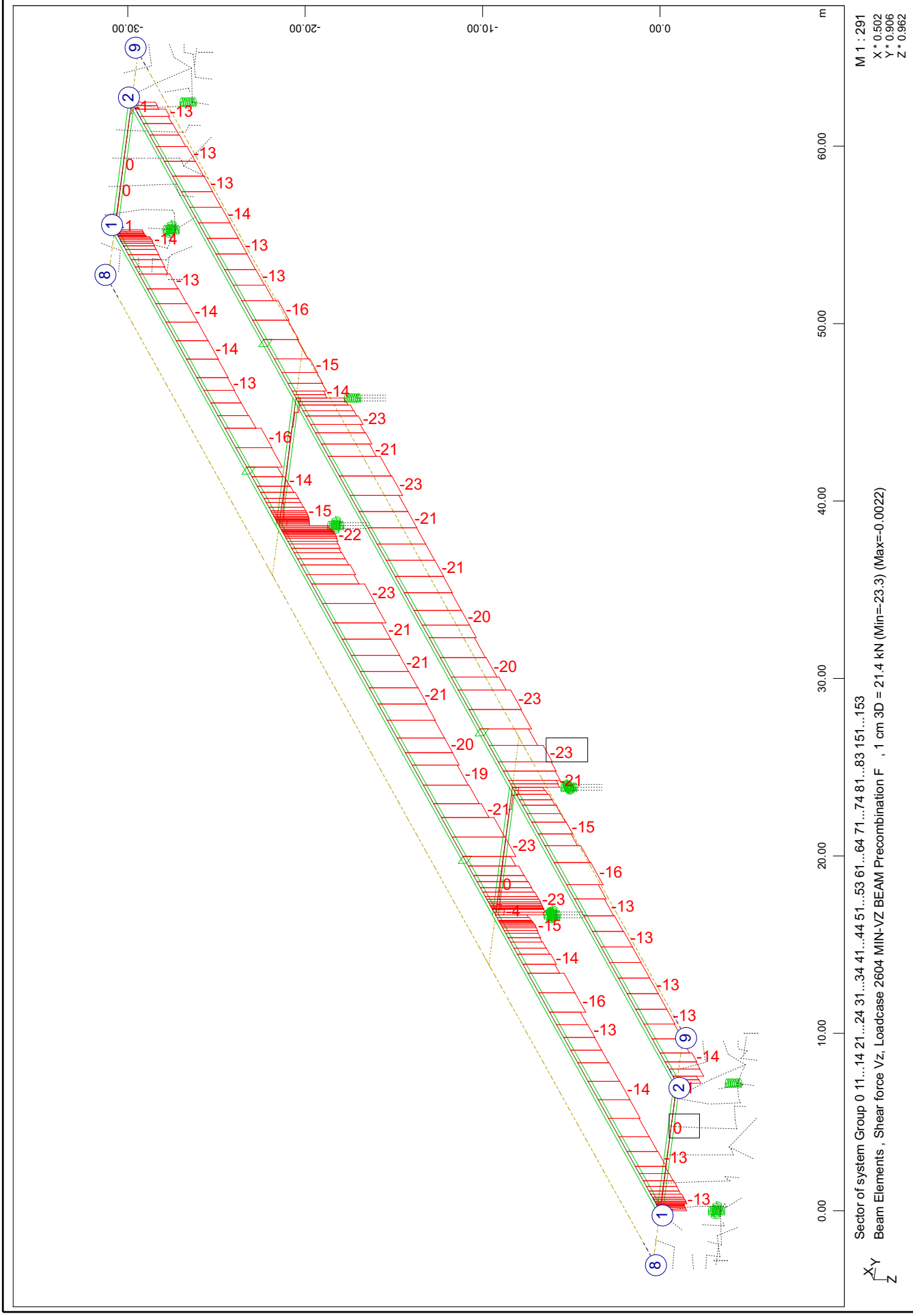

SOFiSTiK AG - www.sofistik.de

Composite bridge 38+50+38, b=14.25m, 2x2HL1100R HISTAR460 , slab 0.30m C30/37
Results for characteristic precombinations of loads: Settlements

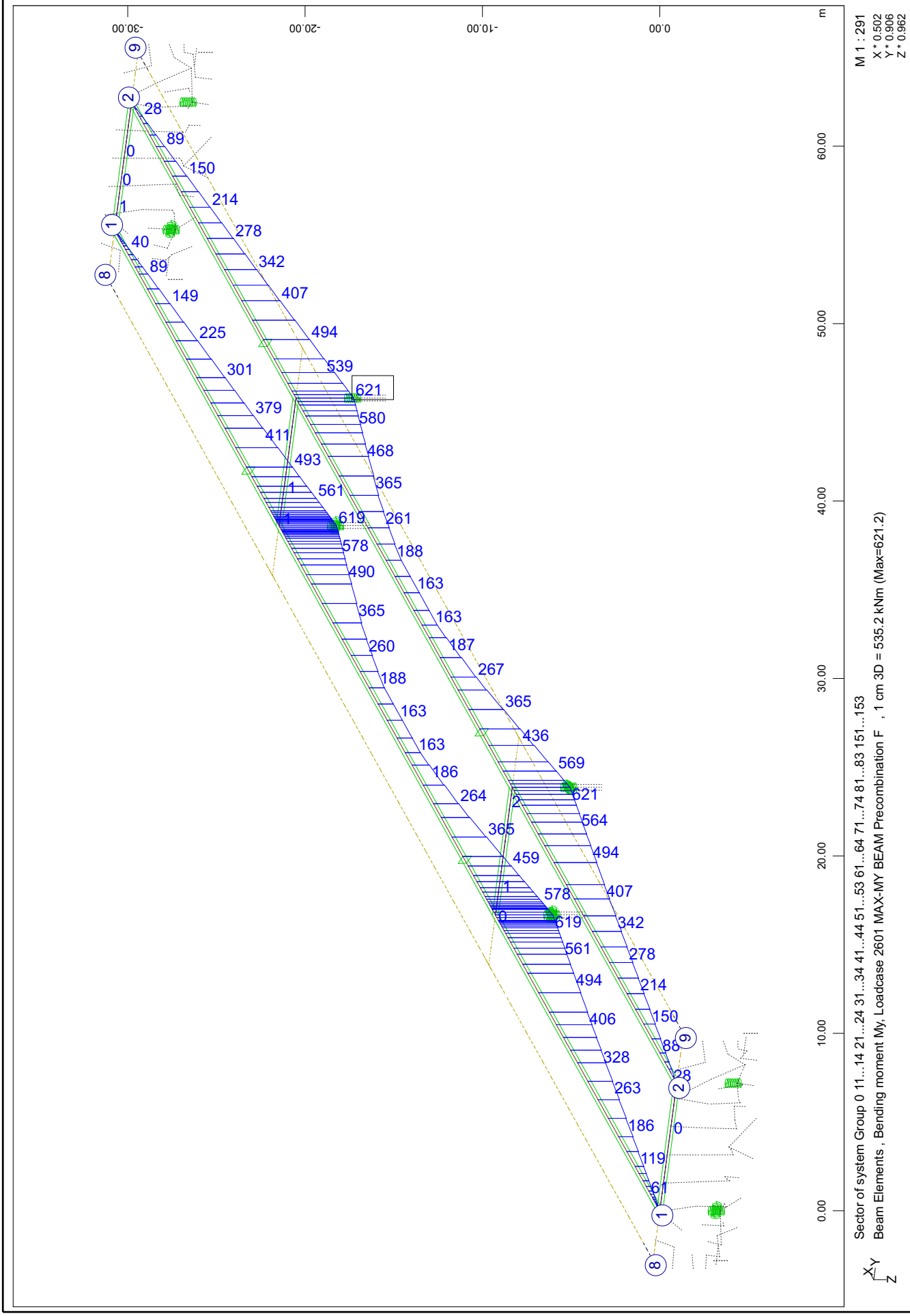

Composite bridge 38+50+38, b=14.25m, 2x2HL1100R HISTAR460 , slab 0.30m C30/37
Results for characteristic precombinations of loads: Settlements

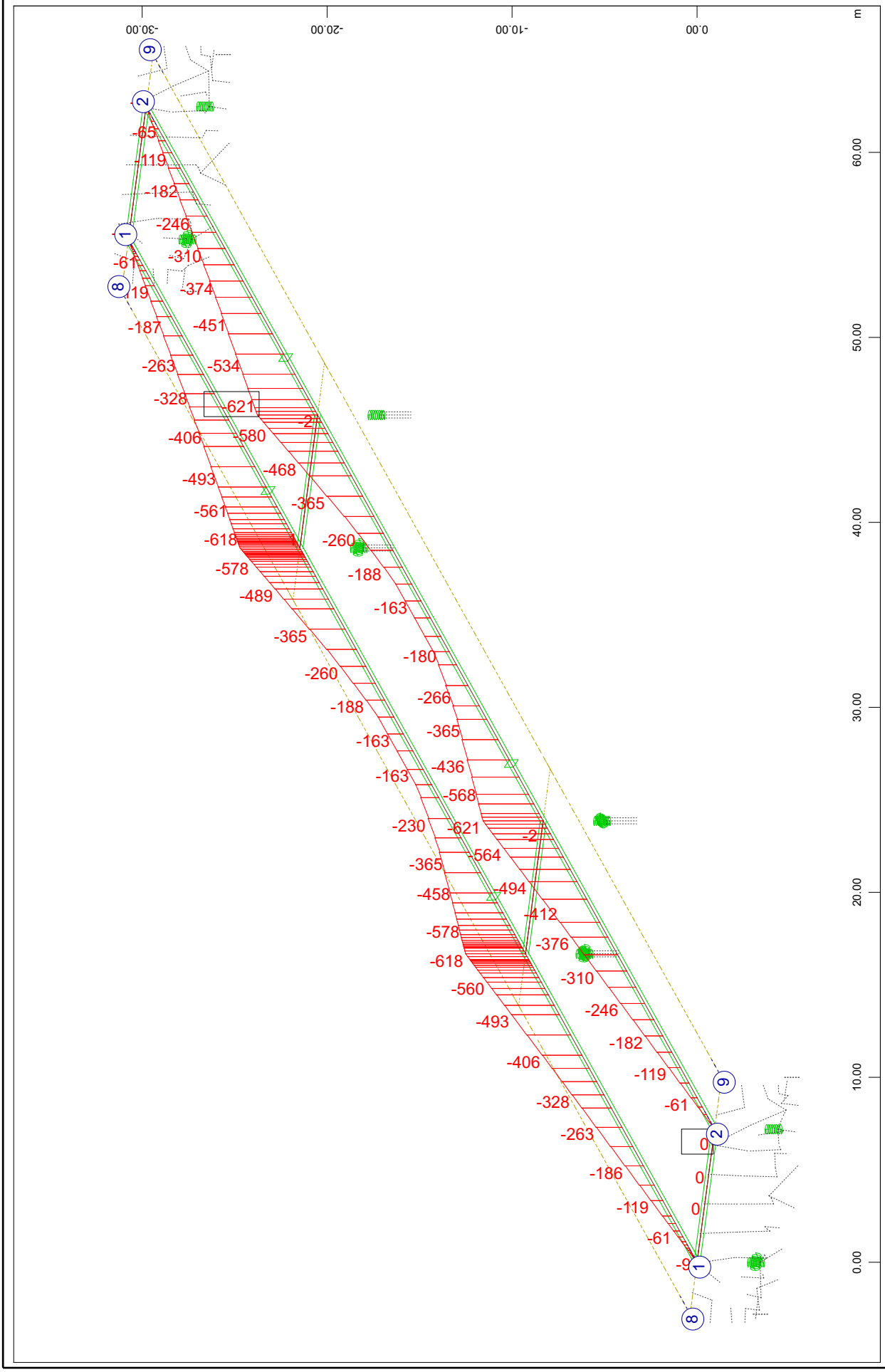

Composite bridge 38+50+38, b=14.25m, 2x2HL1100R HISTAR460 , slab 0.30m C30/37
Results for characteristic precombinations of loads: Settlements

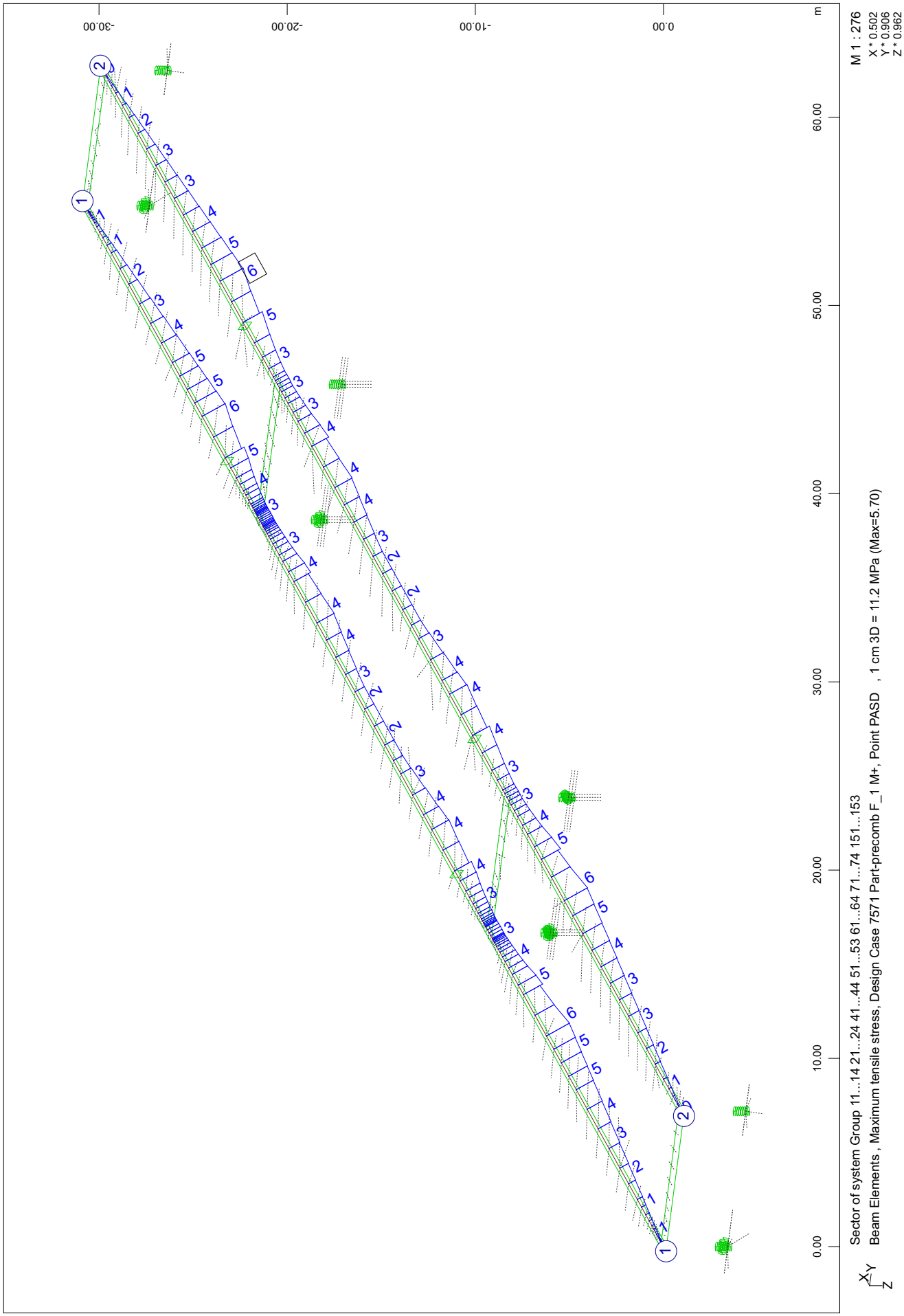

SOFiSTiK AG - www.sofistik.de

Composite bridge 38+50+38, b=14.25m, 2x2HL1100R HISTAR460 , slab 0.30m C30/37
Results for characteristic precombinations of loads: Settlements

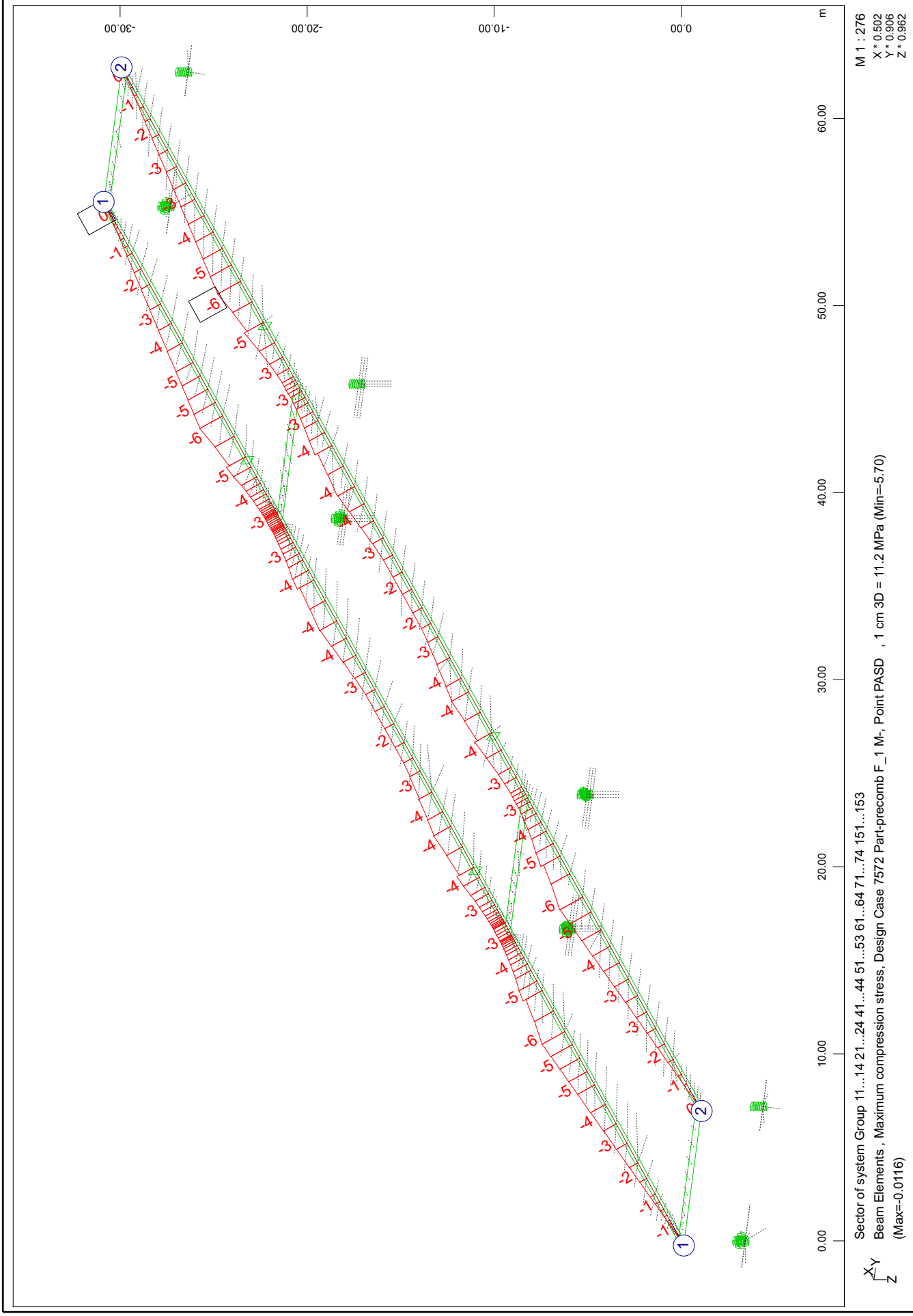

SOFiSTiK AG - www.sofistik.de

Composite bridge 38+50+38, b=14.25m, 2x2HL1100R HISTAR460 , slab 0.30m C30/37
Results for characteristic precombinations of loads: Settlements

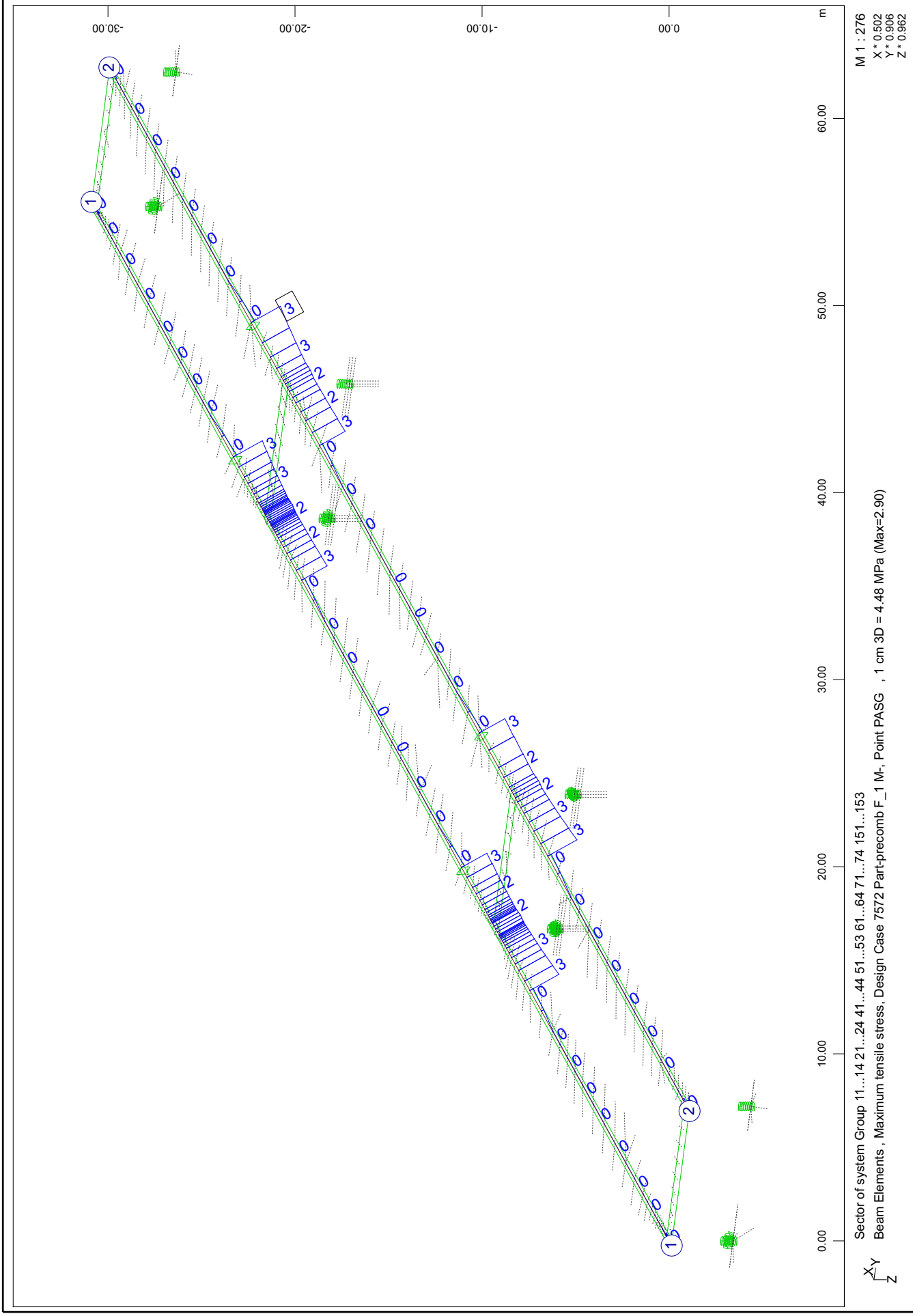

SOFiSTiK AG - www.sofistik.de

Composite bridge 38+50+38, b=14.25m, 2x2HL1100R HISTAR460 , slab 0.30m C30/37
Results for characteristic precombinations of loads: Settlements

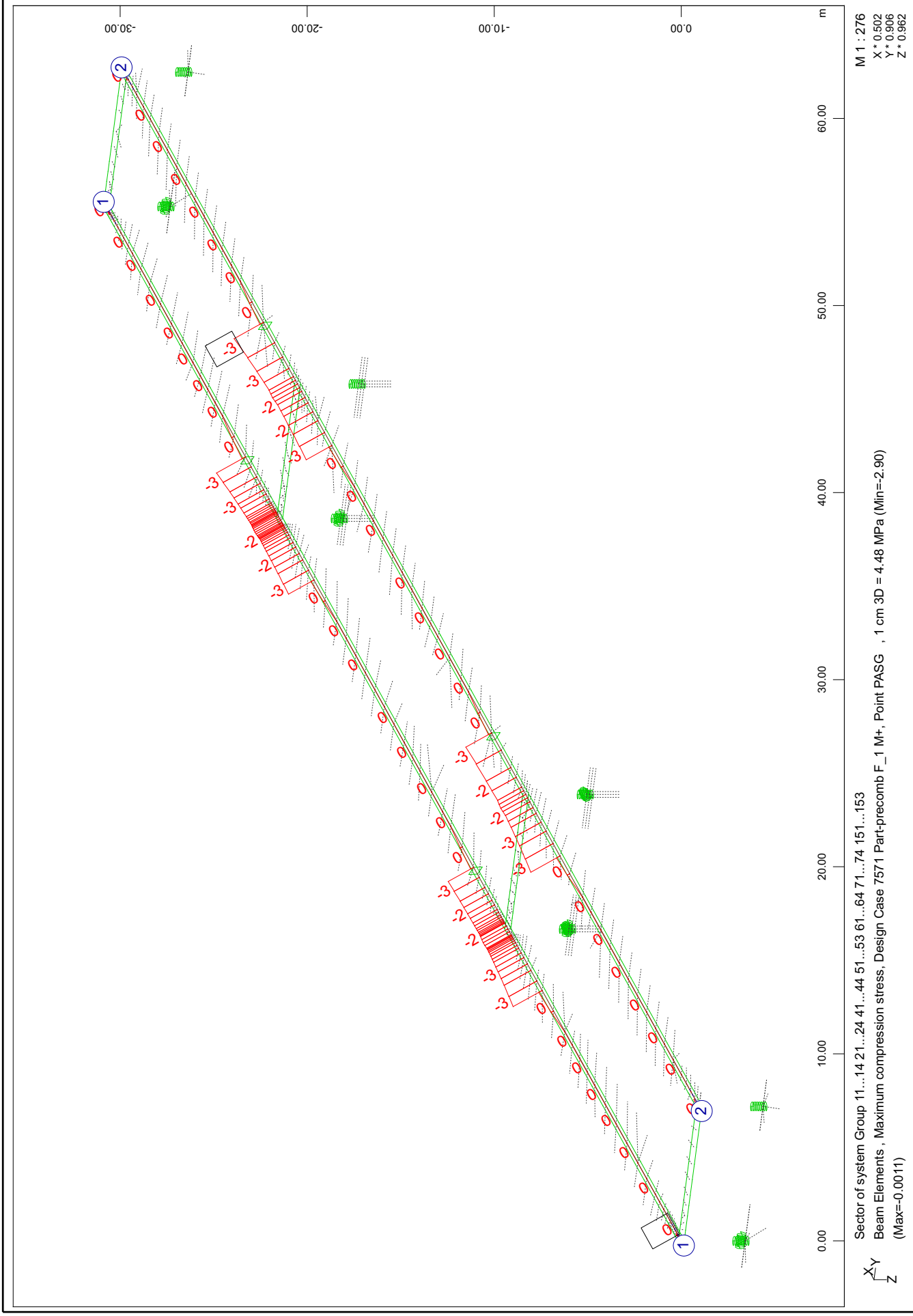

SOFiSTiK AG - www.sofistik.de

Composite bridge 38+50+38, b=14.25m, 2x2HL1100R HISTAR460 , slab 0.30m C30/37
Results for characteristic precombinations of loads: Settlements

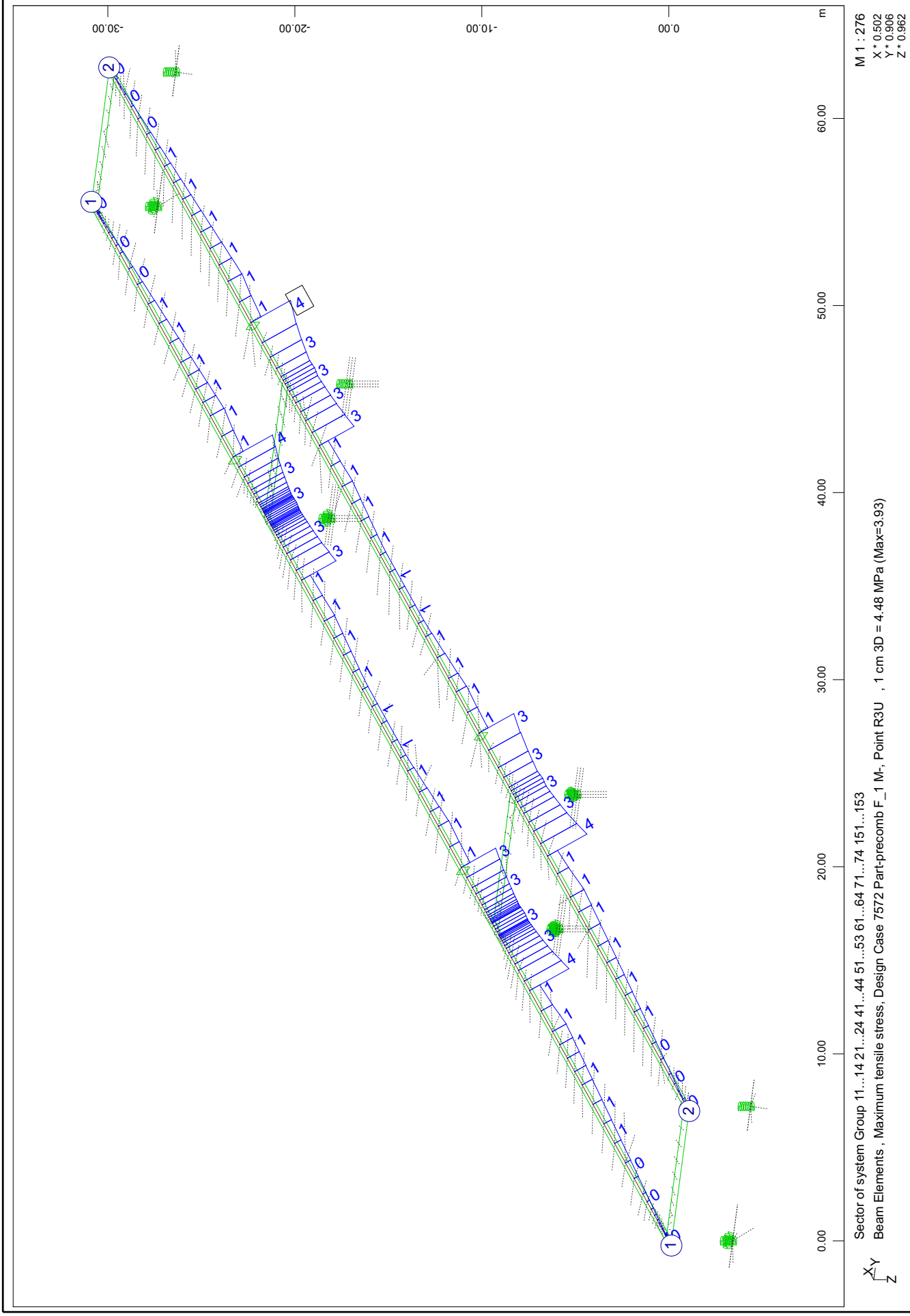

SOFiSTiK AG - www.sofistik.de

Composite bridge 38+50+38, b=14.25m, 2x2HL1100R HISTAR460 , slab 0.30m C30/37
Results for characteristic precombinations of loads: Settlements

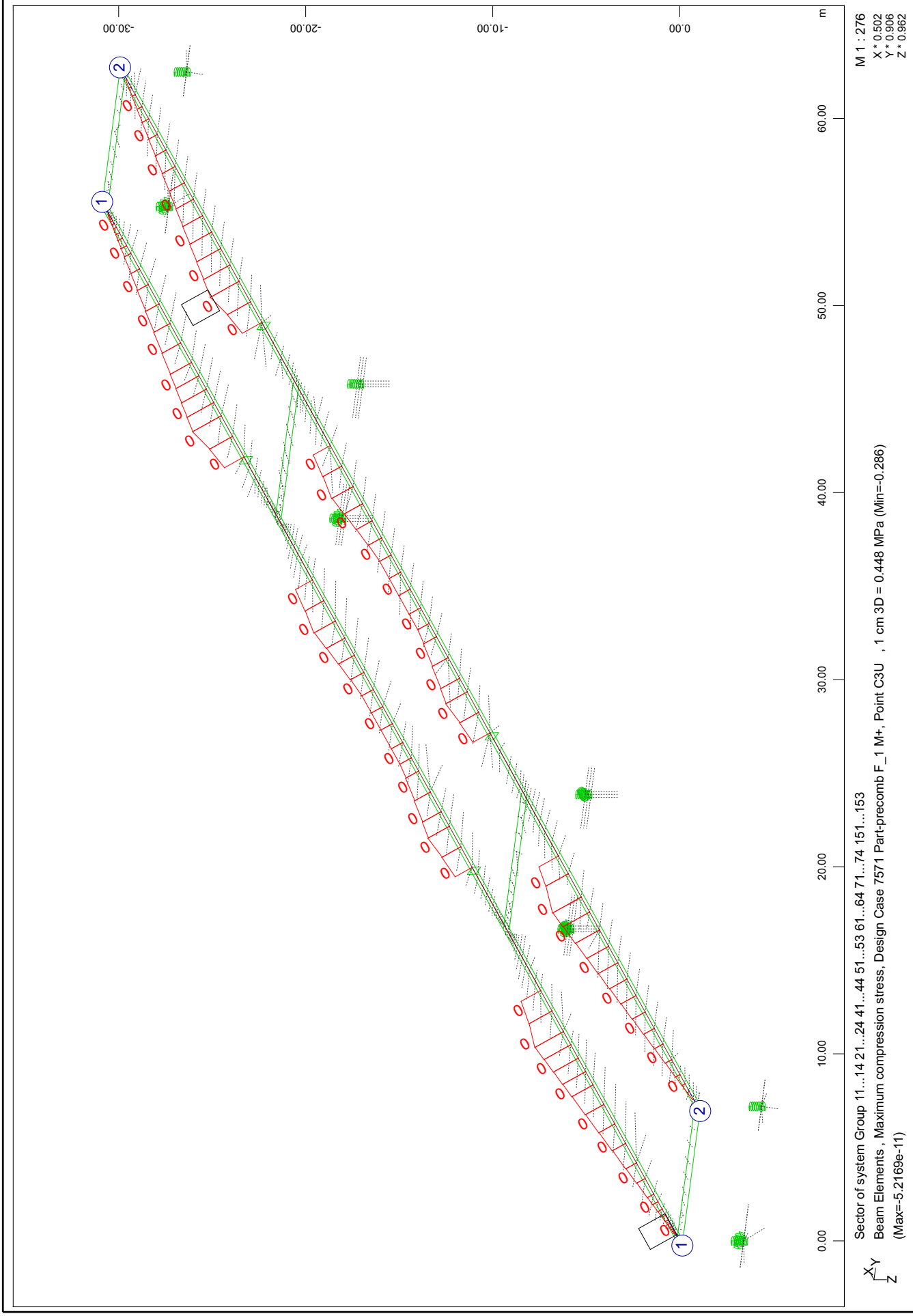

SOFiSTiK AG - www.sofistik.de

Composite bridge 38+50+38, b=14.25m, 2x2HL1100R HISTAR460 , slab 0.30m C30/37
Results for characteristic precombinations of loads: Settlements

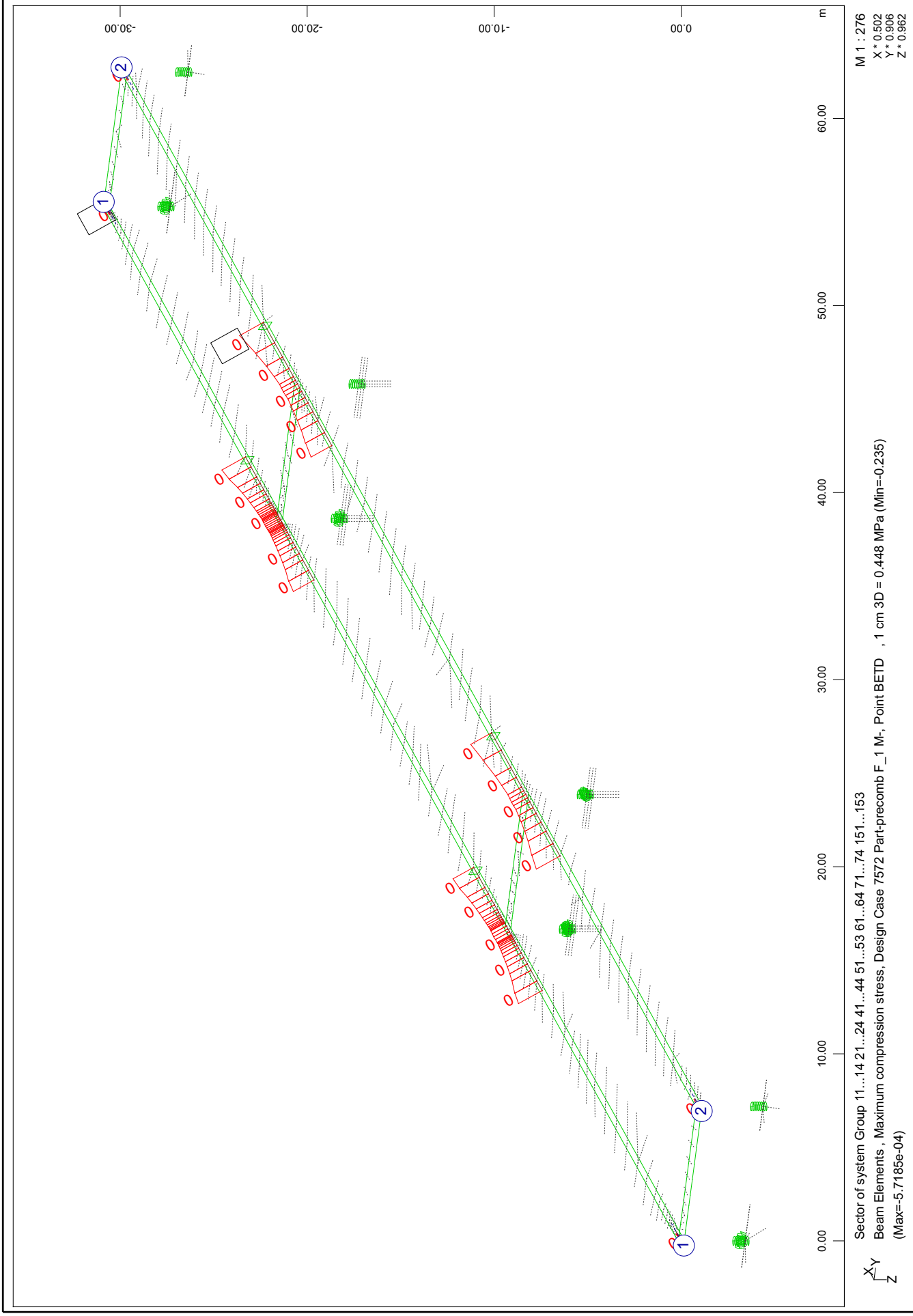

SOFiSTiK AG - www.sofistik.de

Composite bridge 38+50+38, b=14.25m, 2x2HL1100R HISTAR460 , slab 0.30m C30/37
Results for characteristic precombinations of loads: Temperature

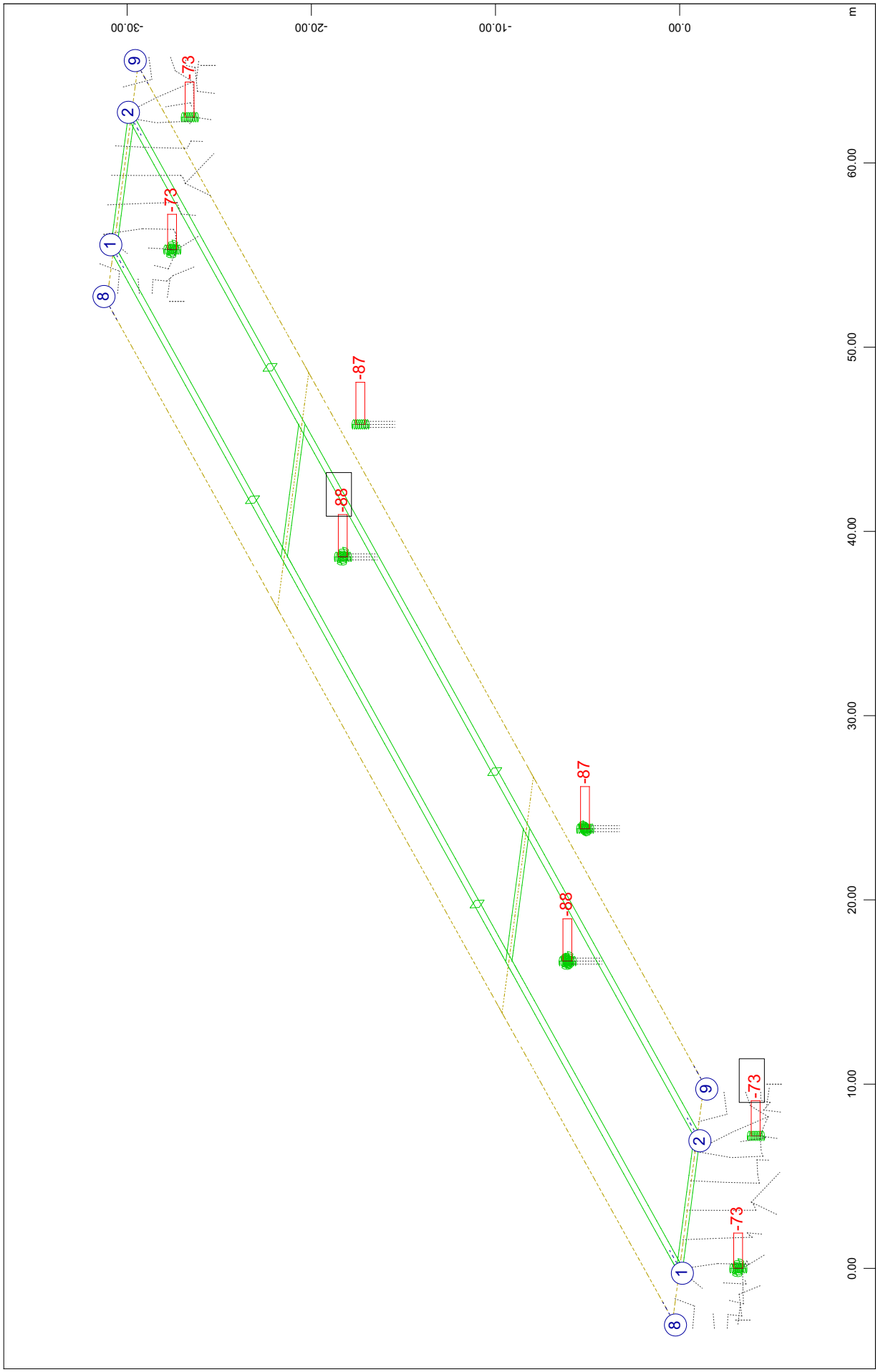

SOFiSTiK AG - www.sofistik.de

Composite bridge 38+50+38, b=14.25m, 2x2HL1100R HISTAR460 , slab 0.30m C30/37
Results for characteristic precombinations of loads: Temperature

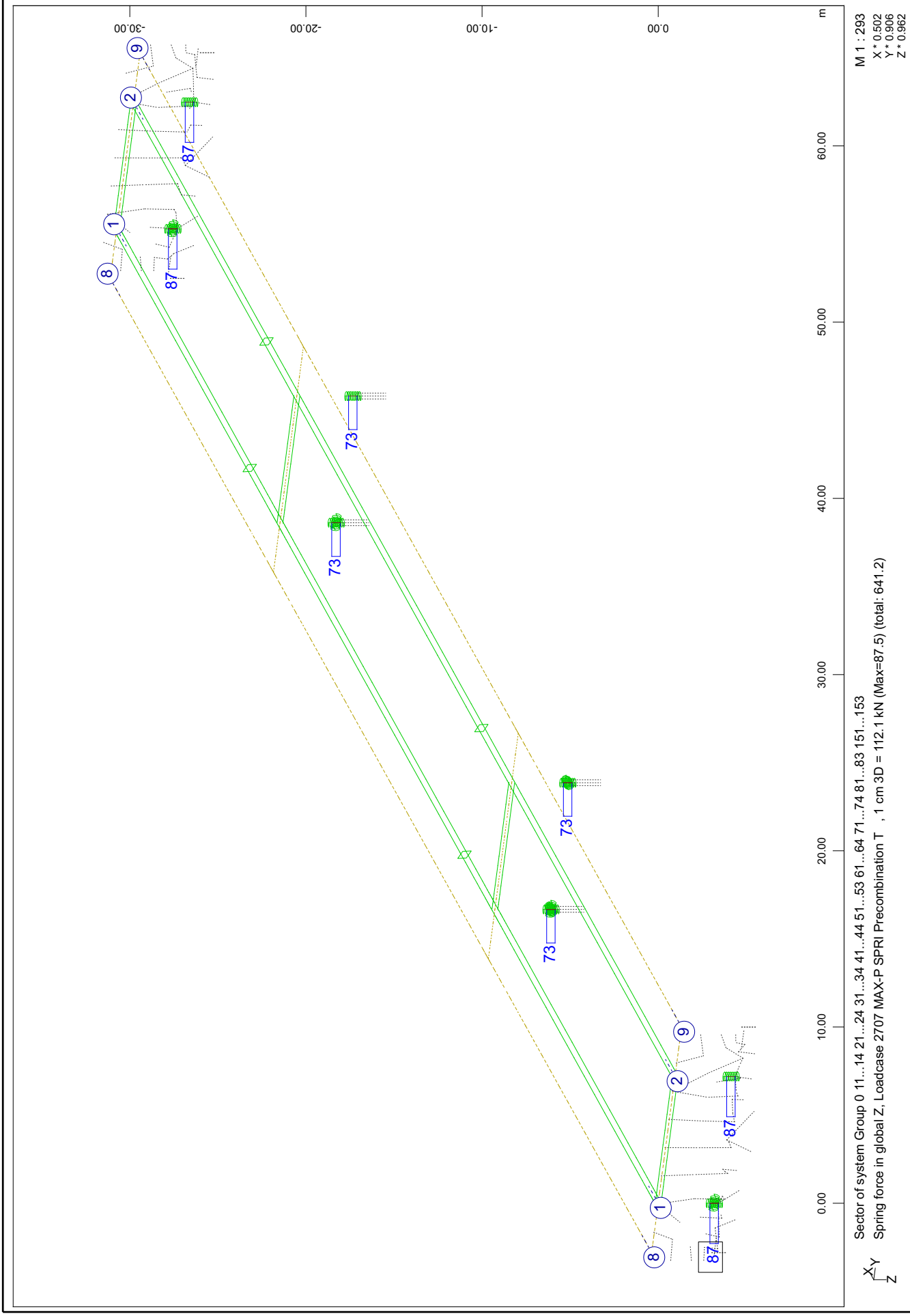

SOFiSTiK AG - www.sofistik.de

Composite bridge 38+50+38, b=14.25m, 2x2HL1100R HISTAR460 , slab 0.30m C30/37
Results for characteristic precombinations of loads: Temperature

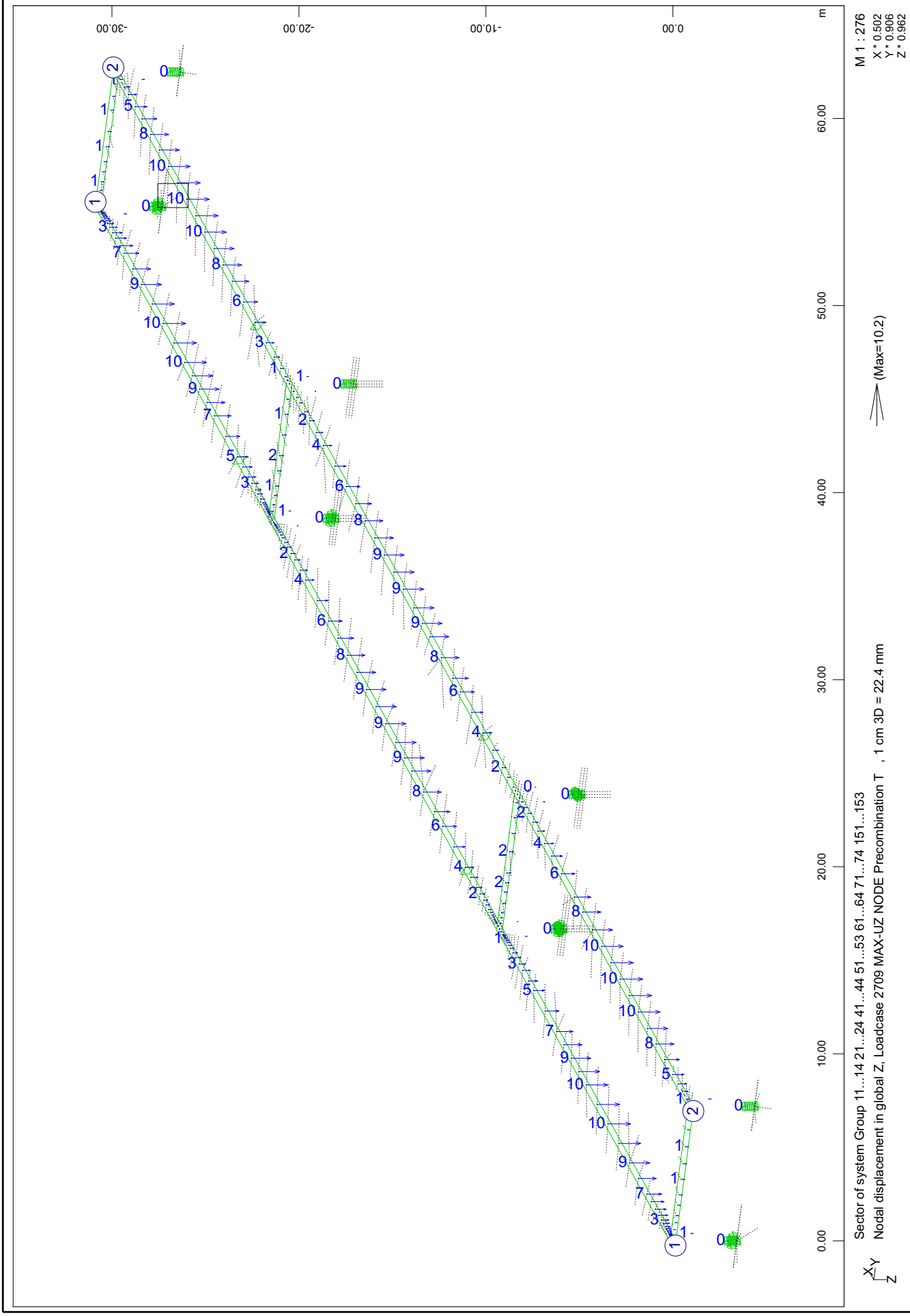

SOFiSTiK AG - www.sofistik.de

Composite bridge 38+50+38, b=14.25m, 2x2HL1100R HISTAR460 , slab 0.30m C30/37
Results for characteristic precombinations of loads: Temperature

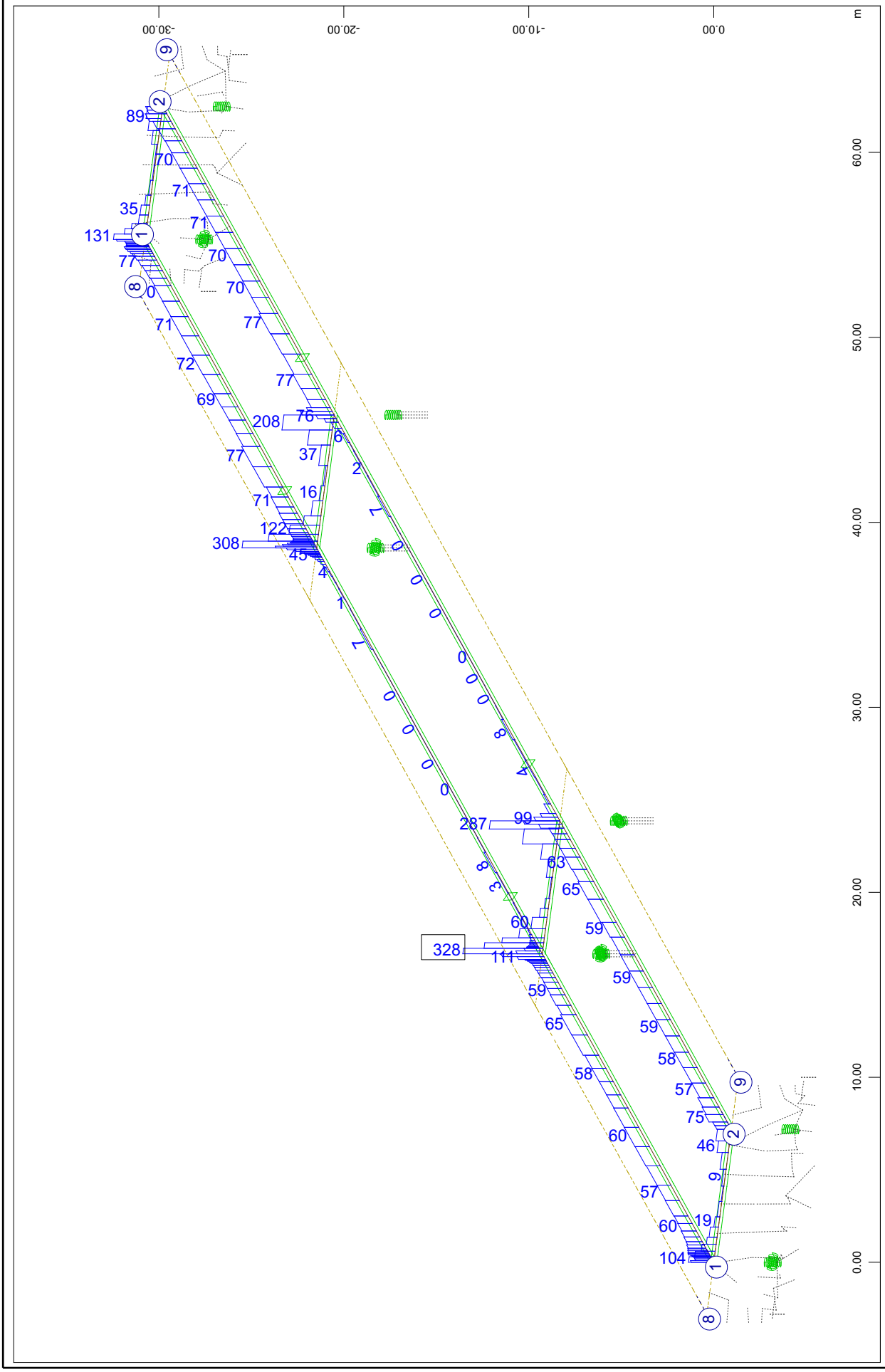

SOFiSTiK AG - www.sofistik.de

Composite bridge 38+50+38, b=14.25m, 2x2HL1100R HISTAR460 , slab 0.30m C30/37
Results for characteristic precombinations of loads: Temperature

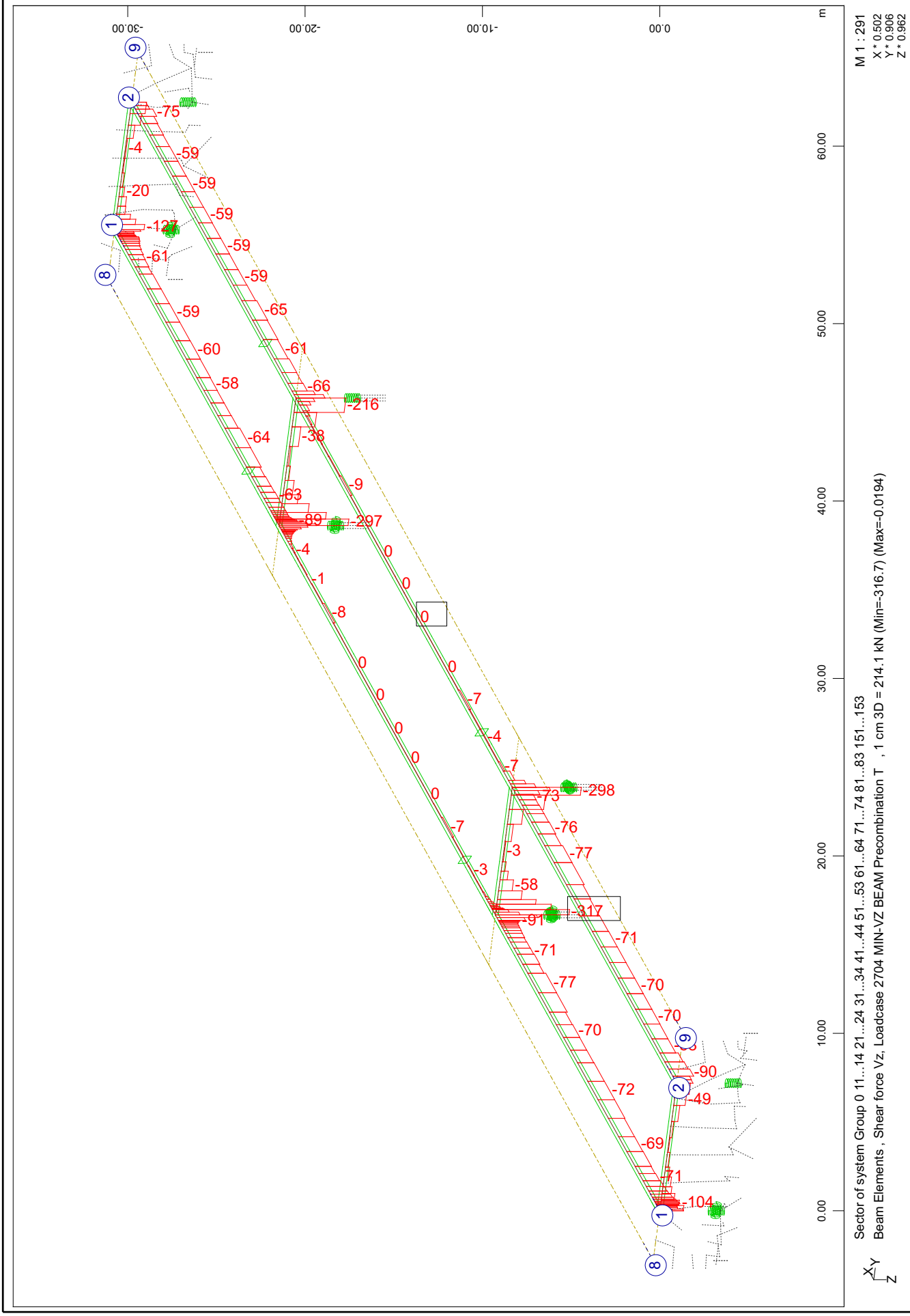

Composite bridge 38+50+38, b=14.25m, 2x2HL1100R HISTAR460 , slab 0.30m C30/37
Results for characteristic precombinations of loads: Temperature

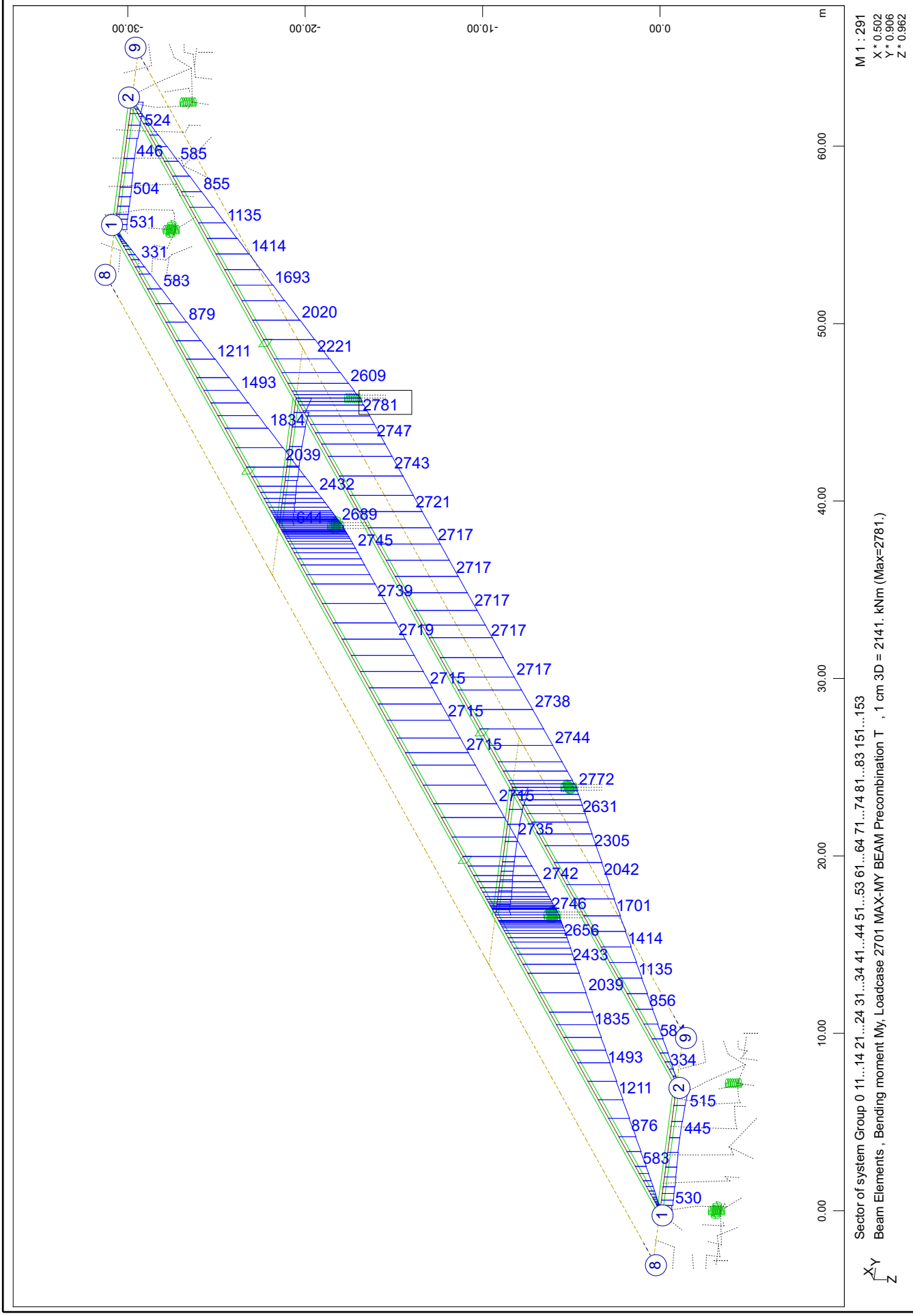

Composite bridge 38+50+38, b=14.25m, 2x2HL1100R HISTAR460 , slab 0.30m C30/37
Results for characteristic precombinations of loads: Temperature

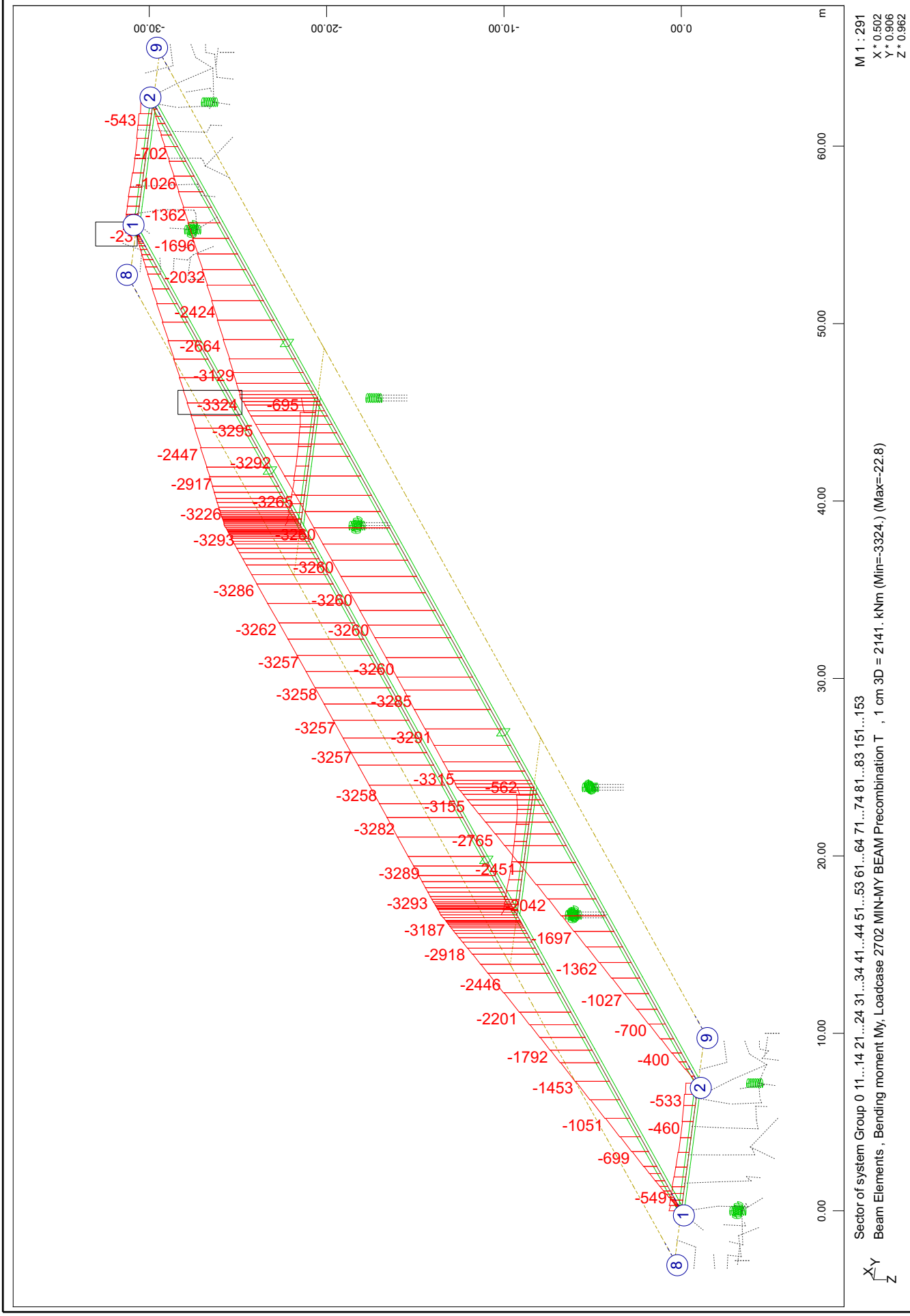

Composite bridge 38+50+38, b=14.25m, 2x2HL1100R HISTAR460 , slab 0.30m C30/37
Results for characteristic precombinations of loads: Temperature

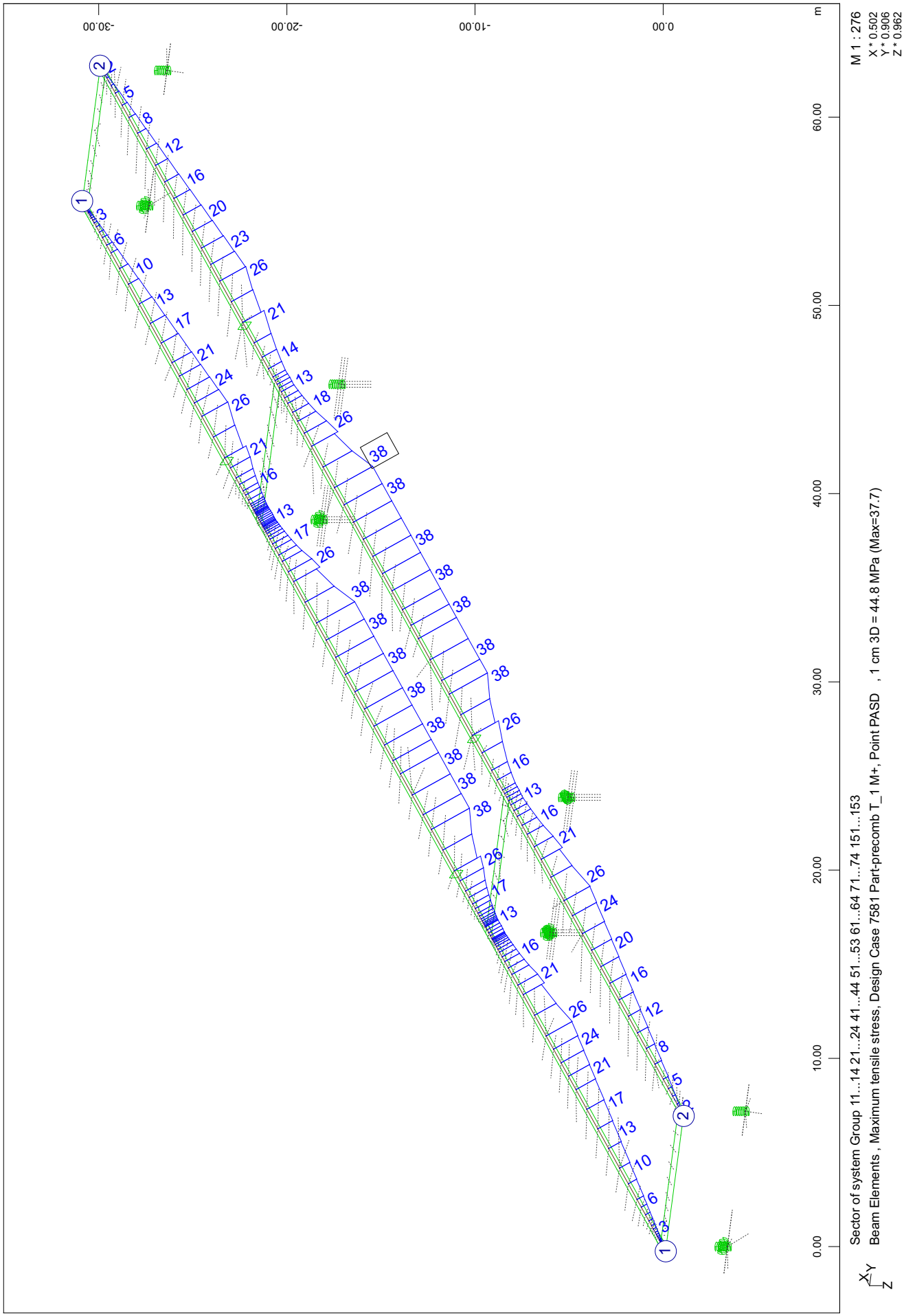

Composite bridge 38+50+38, b=14.25m, 2x2HL1100R HISTAR460 , slab 0.30m C30/37
Results for characteristic precombinations of loads: Temperature

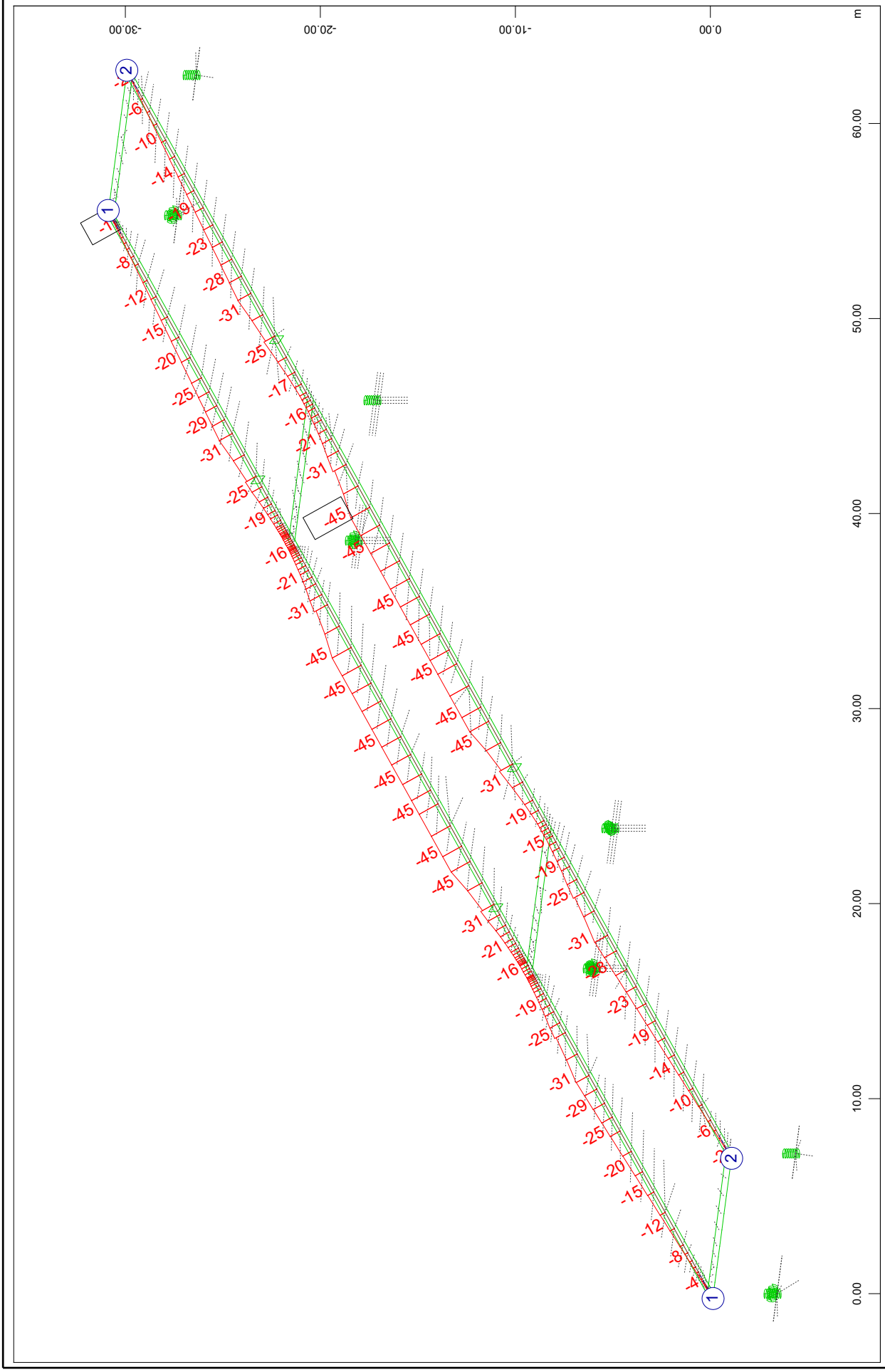

SOFiSTiK AG - www.sofistik.de

Composite bridge 38+50+38, b=14.25m, 2x2HL1100R HISTAR460 , slab 0.30m C30/37
Results for characteristic precombinations of loads: Temperature

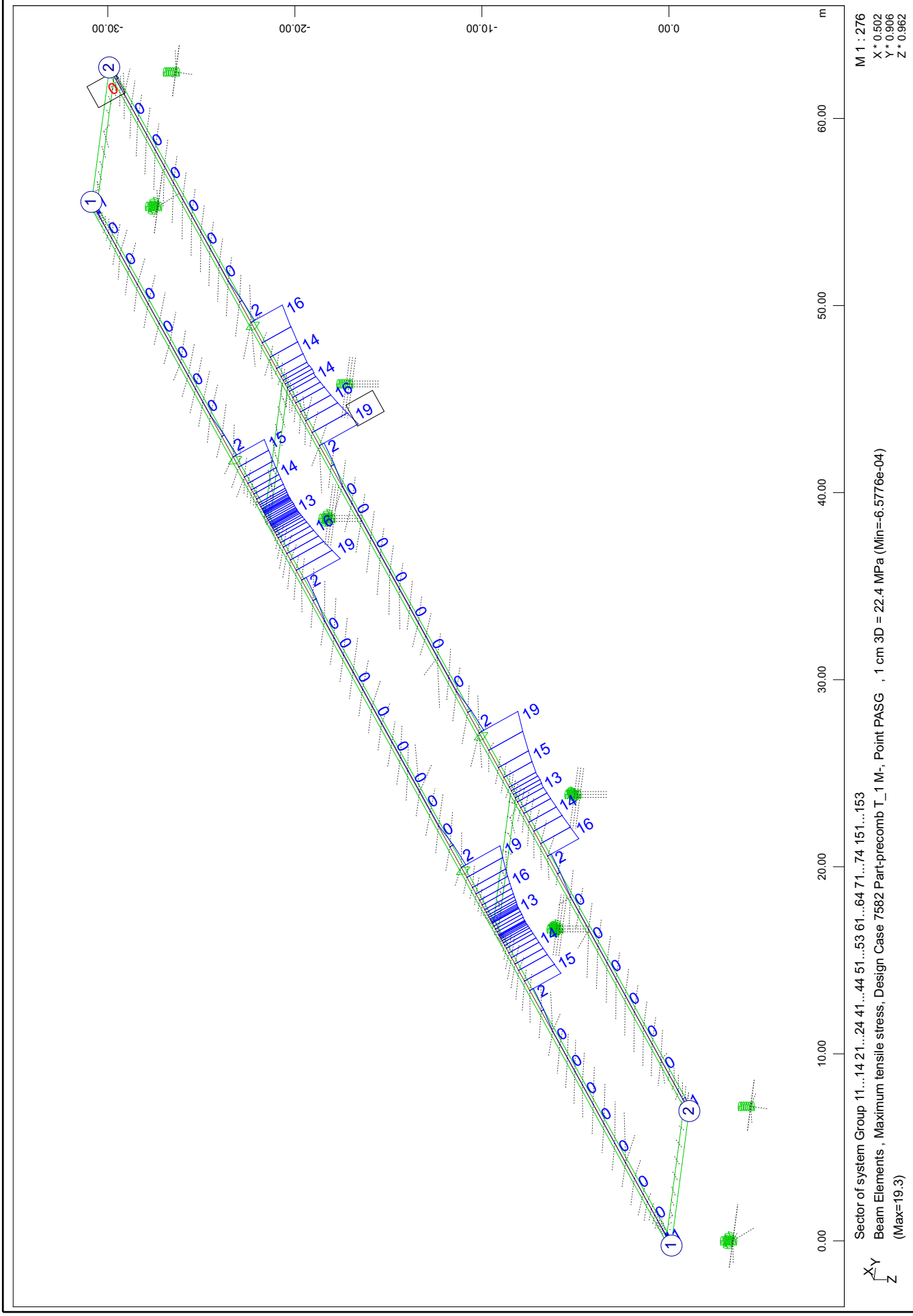

SOFiSTiK AG - www.sofistik.de

Composite bridge 38+50+38, b=14.25m, 2x2HL1100R HISTAR460 , slab 0.30m C30/37
Results for characteristic precombinations of loads: Temperature

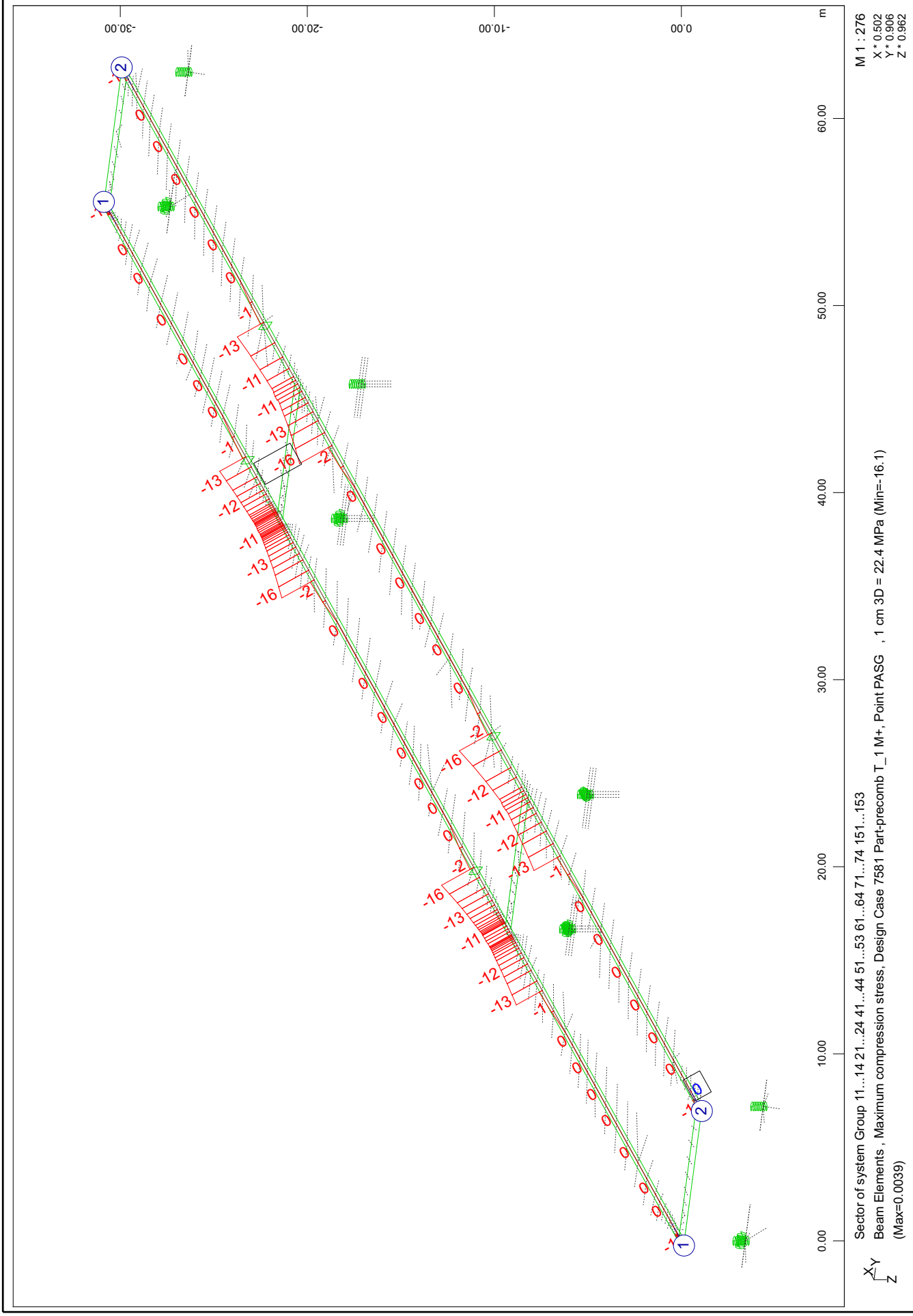

SOFiSTiK AG - www.sofistik.de

Composite bridge 38+50+38, b=14.25m, 2x2HL1100R HISTAR460 , slab 0.30m C30/37
Results for characteristic precombinations of loads: Temperature

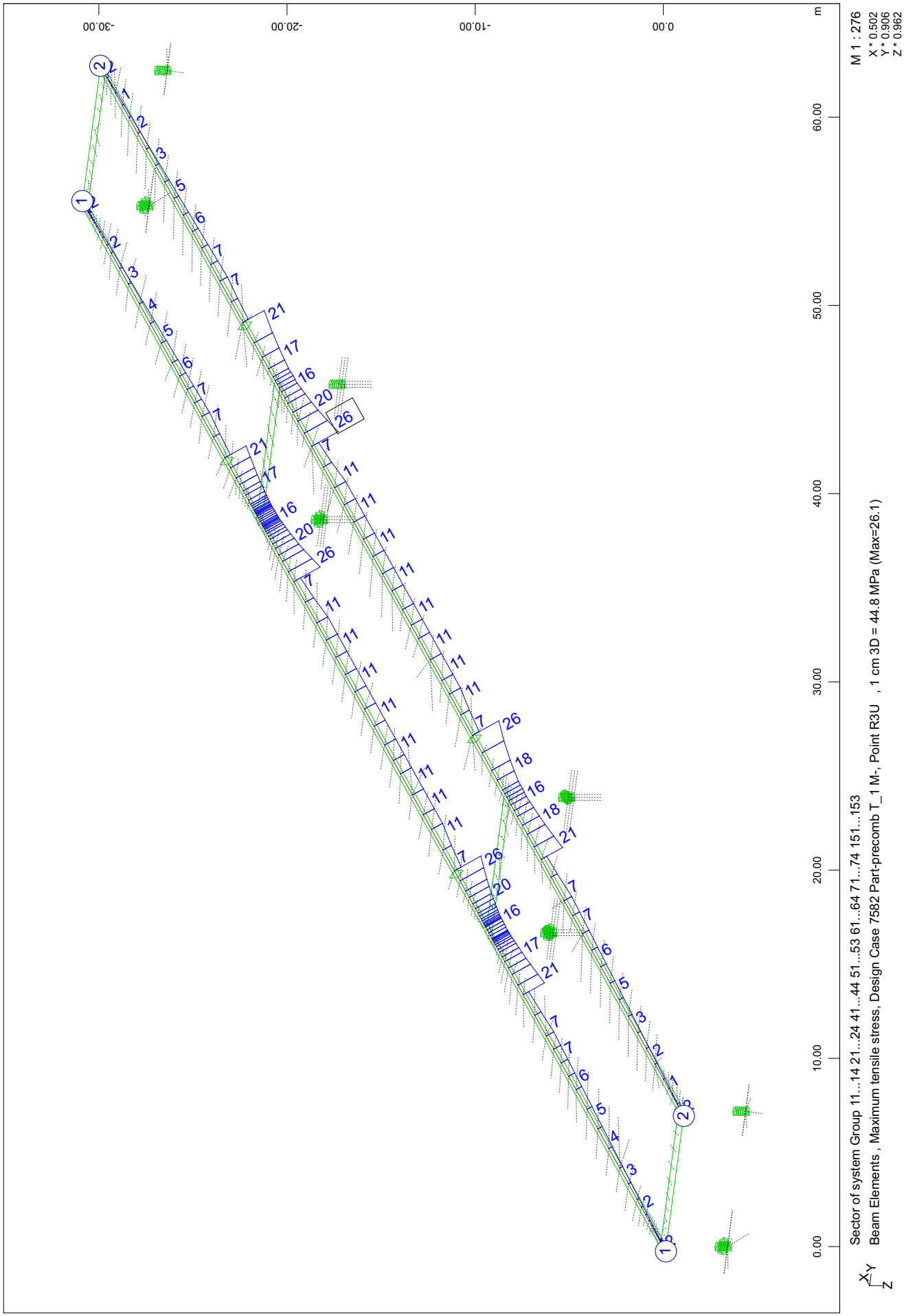

SOFiSTiK AG - www.sofistik.de

Composite bridge 38+50+38, b=14.25m, 2x2HL1100R HISTAR460 , slab 0.30m C30/37
Results for characteristic precombinations of loads: Temperature

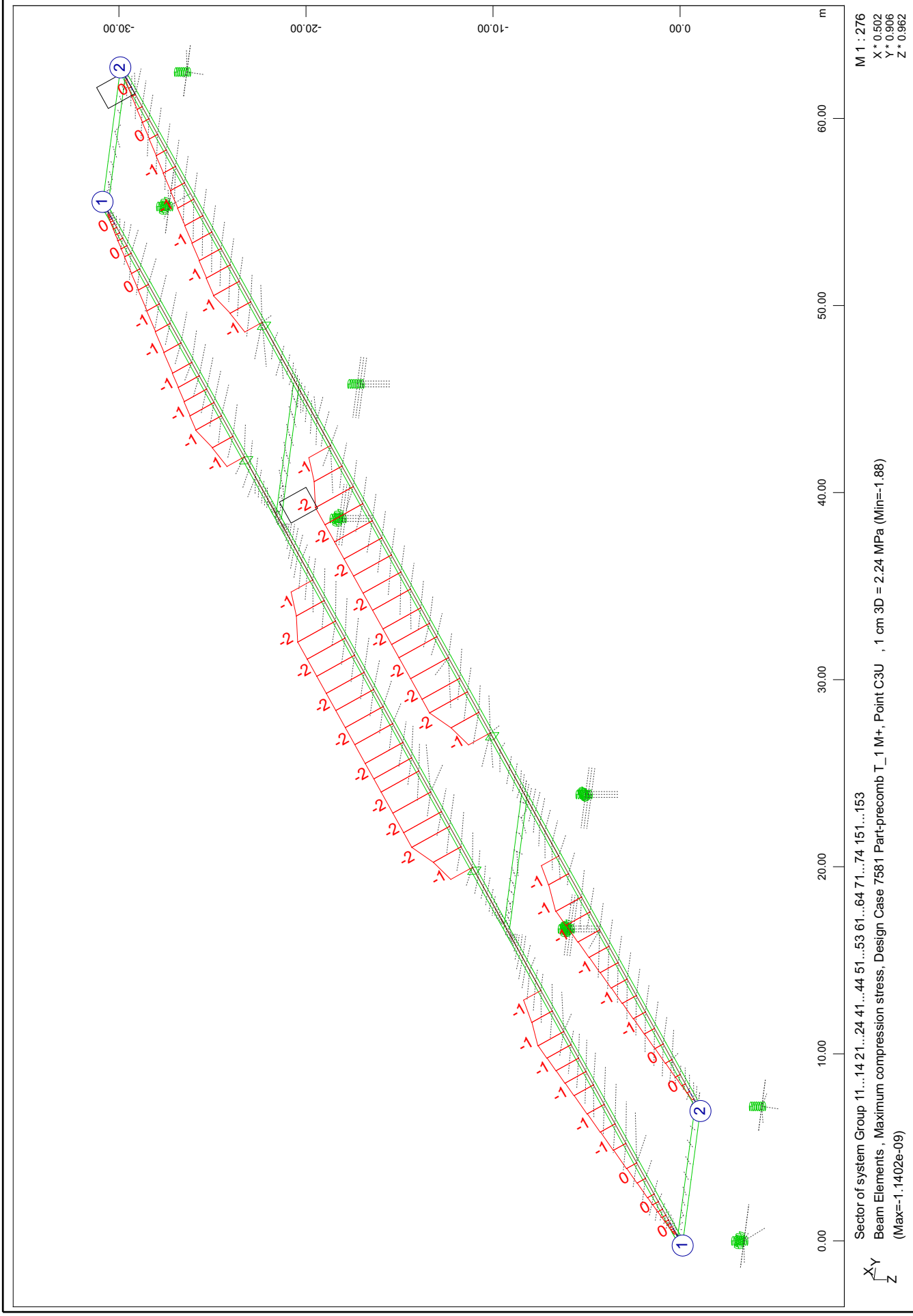

SOFiSTiK AG - www.sofistik.de

Composite bridge 38+50+38, b=14.25m, 2x2HL1100R HISTAR460 , slab 0.30m C30/37
Results for characteristic precombinations of loads: Temperature

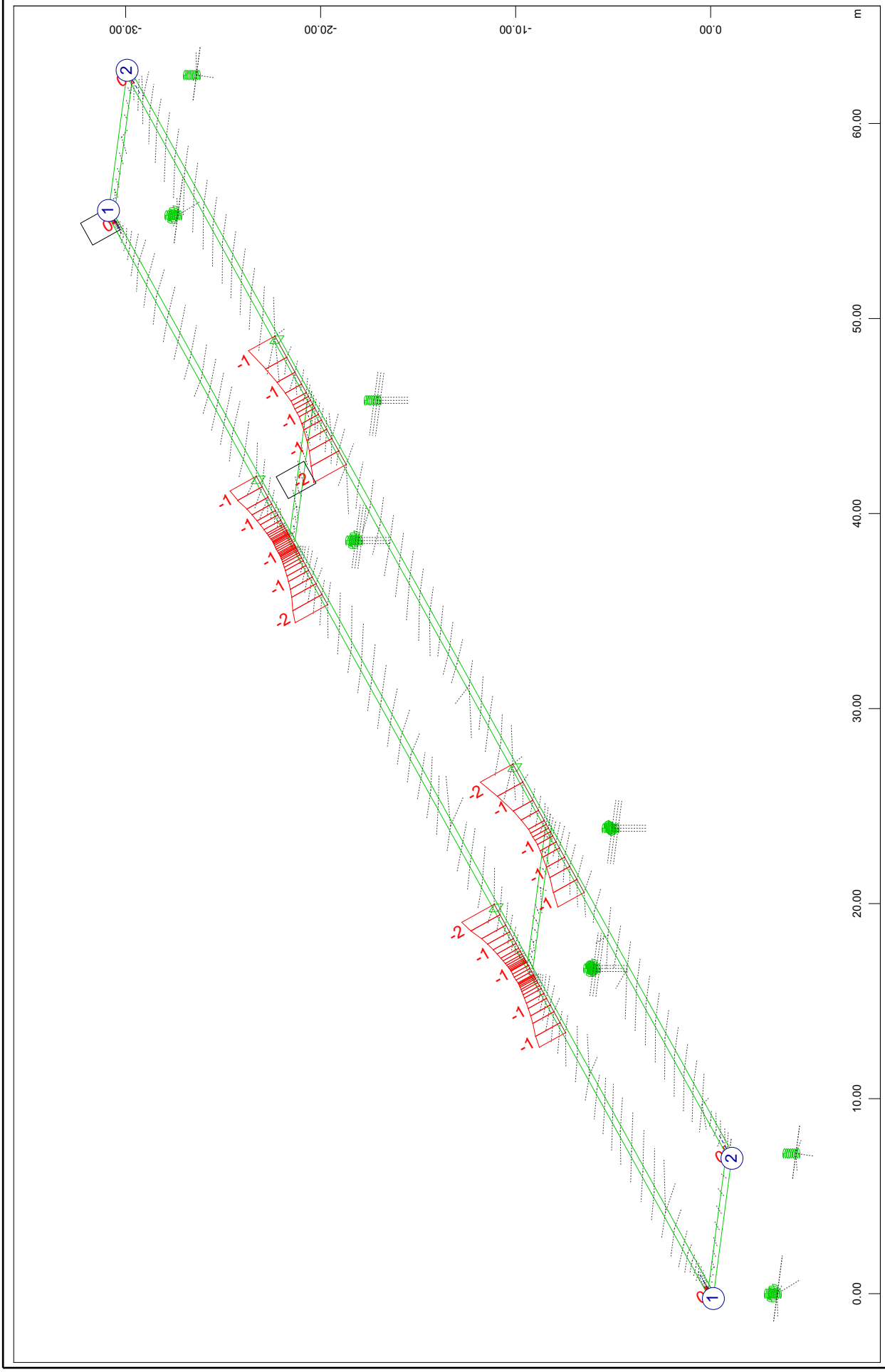

SOFiSTiK AG - www.sofistik.de

Composite bridge 38+50+38, b=14.25m, 2x2HL1100R HISTAR460 , slab 0.30m C30/37
Results for SLS characteristic part-combinations of loads: G+C

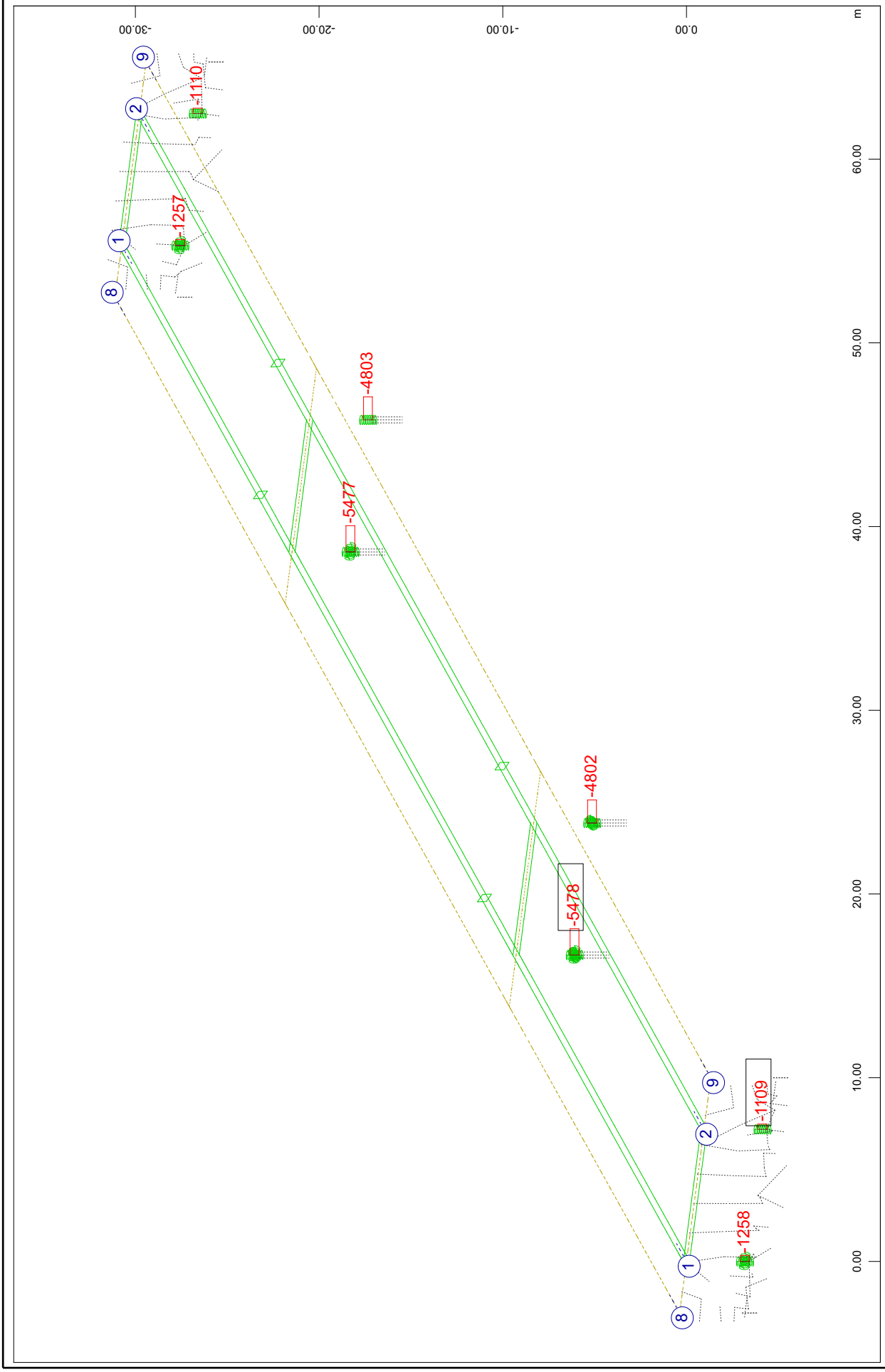

SOFiSTiK AG - www.sofistik.de

Composite bridge 38+50+38, b=14.25m, 2x2HL1100R HISTAR460 , slab 0.30m C30/37
Results for SLS characteristic part-combinations of loads: G+C

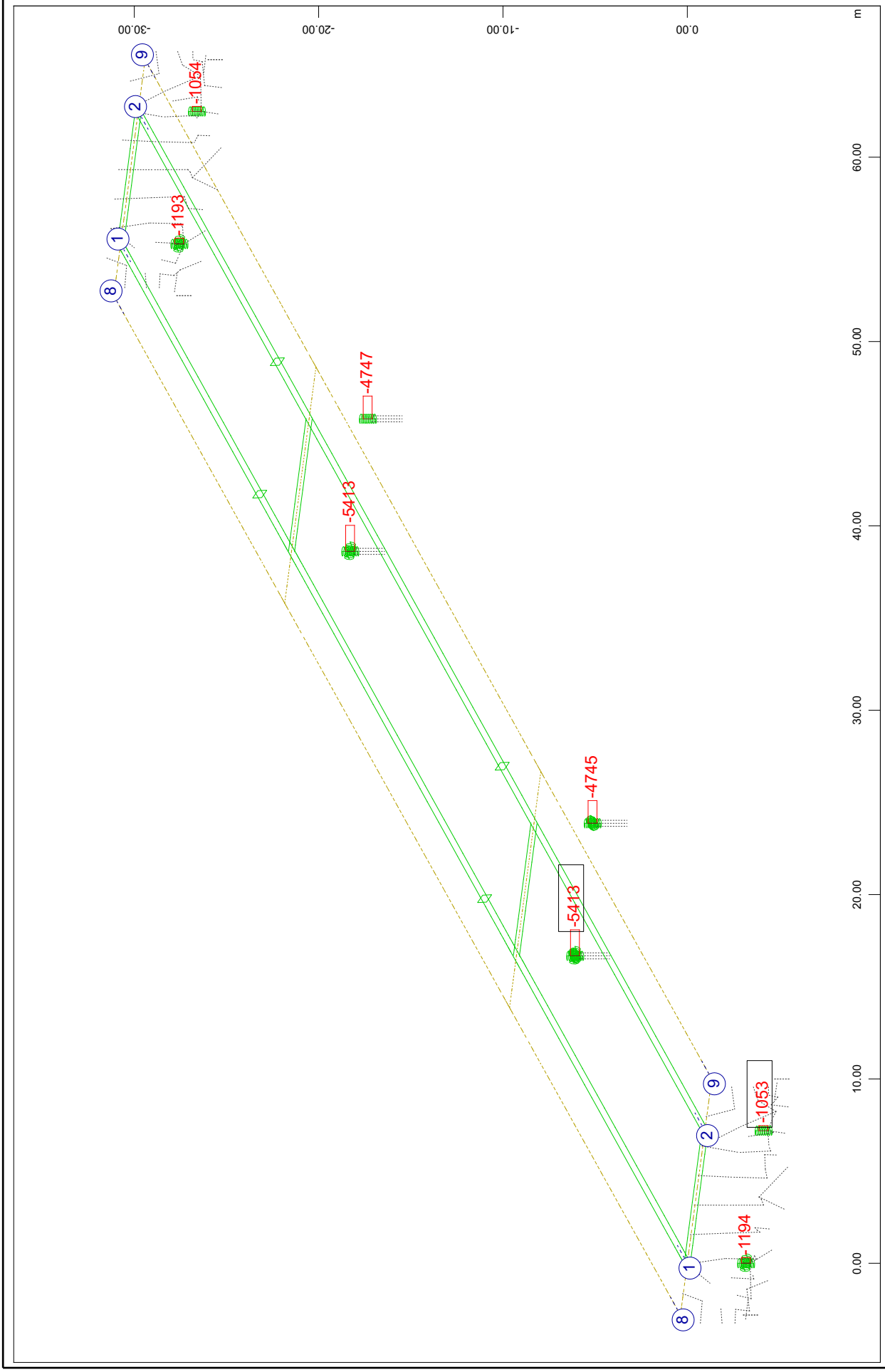

SOFiSTiK AG - www.sofistik.de

Composite bridge 38+50+38, b=14.25m, 2x2HL1100R HISTAR460 , slab 0.30m C30/37
Results for SLS characteristic part-combinations of loads: G+C

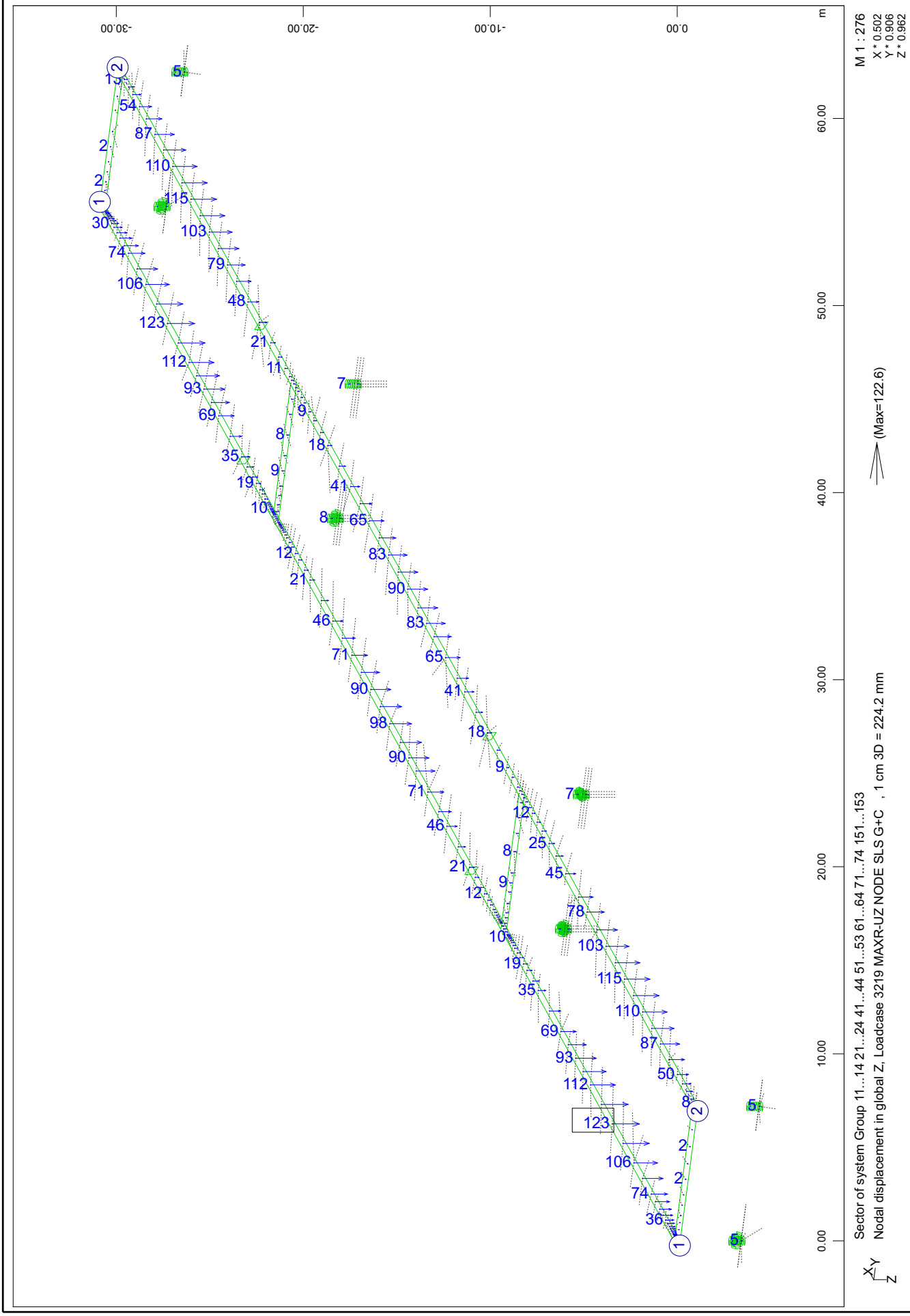

SOFiSTiK AG - www.sofistik.de

Composite bridge 38+50+38, b=14.25m, 2x2HL1100R HISTAR460 , slab 0.30m C30/37
Results for SLS characteristic part-combinations of loads: G+C

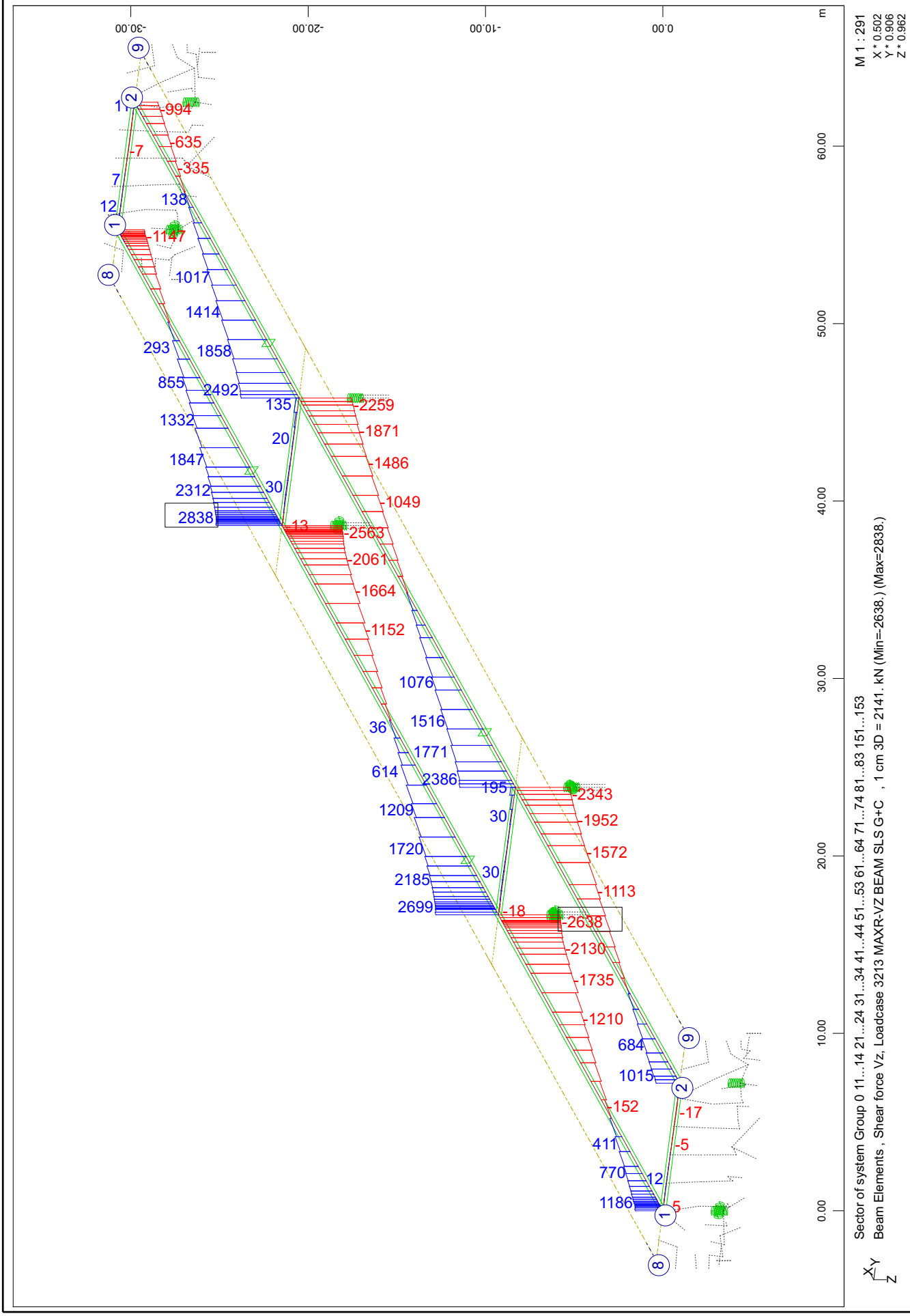

Composite bridge 38+50+38, b=14.25m, 2x2HL1100R HISTAR460 , slab 0.30m C30/37
Results for SLS characteristic part-combinations of loads: G+C

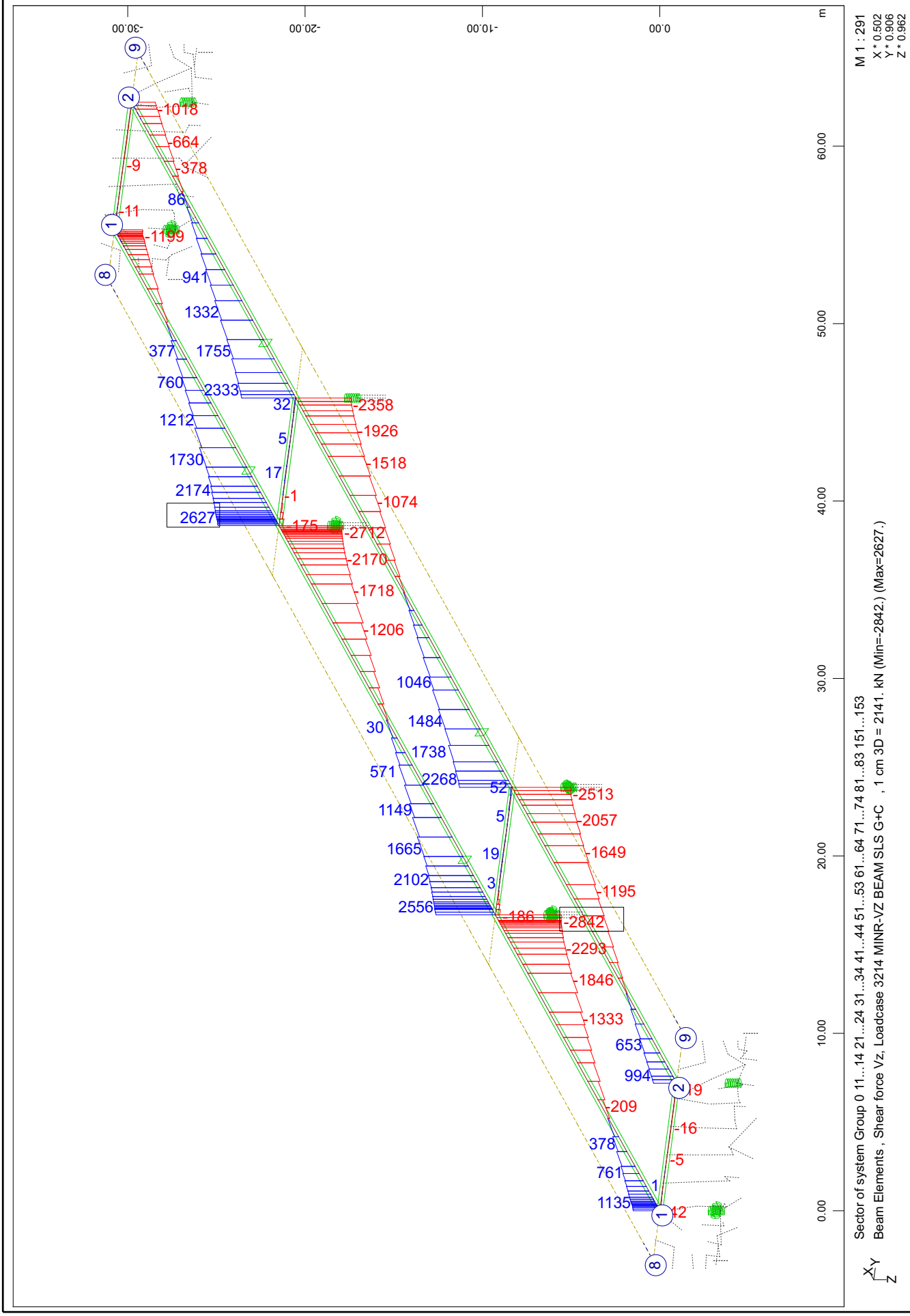

SOFiSTiK AG - www.sofistik.de

Composite bridge 38+50+38, b=14.25m, 2x2HL1100R HISTAR460 , slab 0.30m C30/37
Results for SLS characteristic part-combinations of loads: G+C

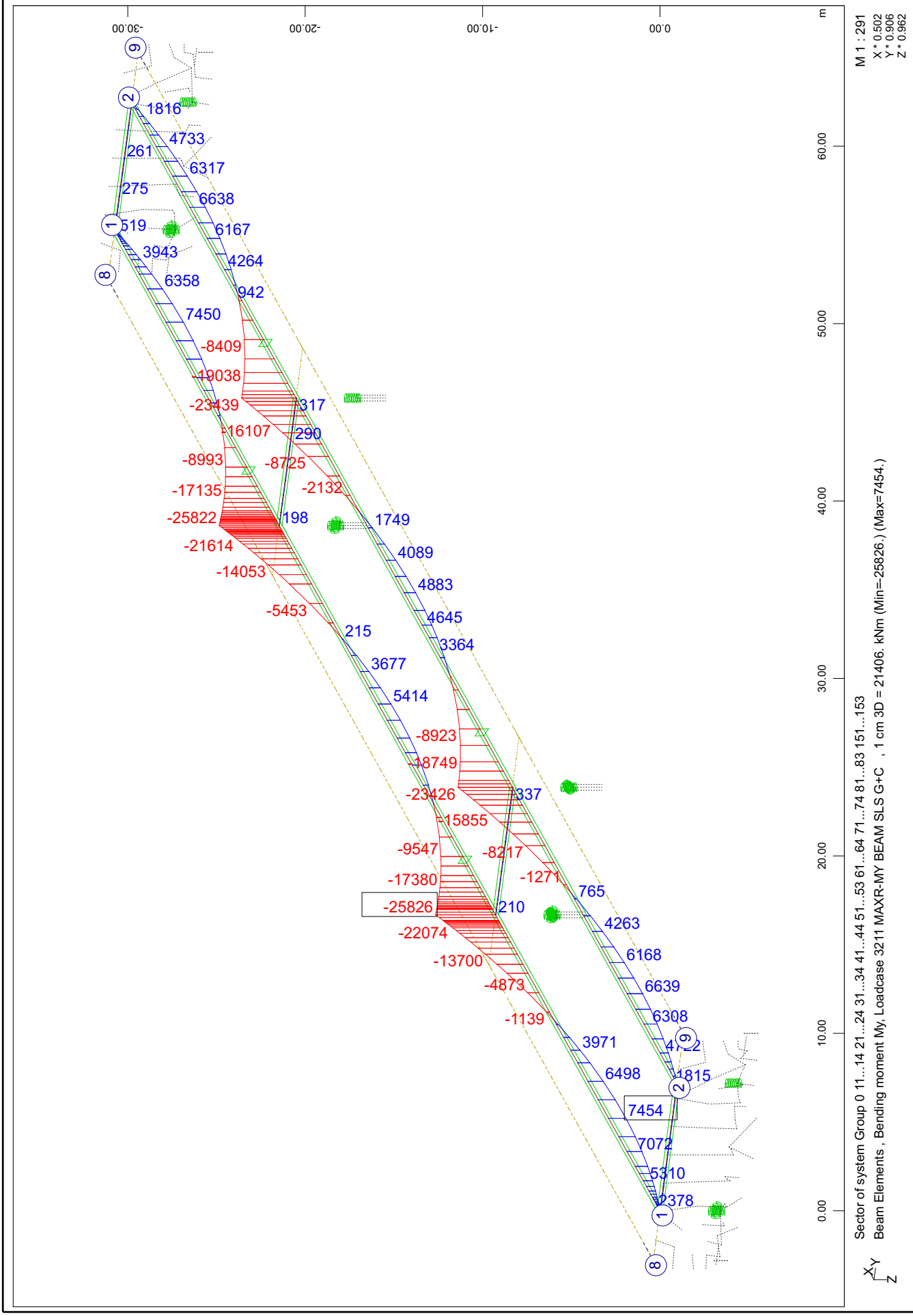

Composite bridge 38+50+38, b=14.25m, 2x2HL1100R HISTAR460 , slab 0.30m C30/37
Results for SLS characteristic part-combinations of loads: G+C

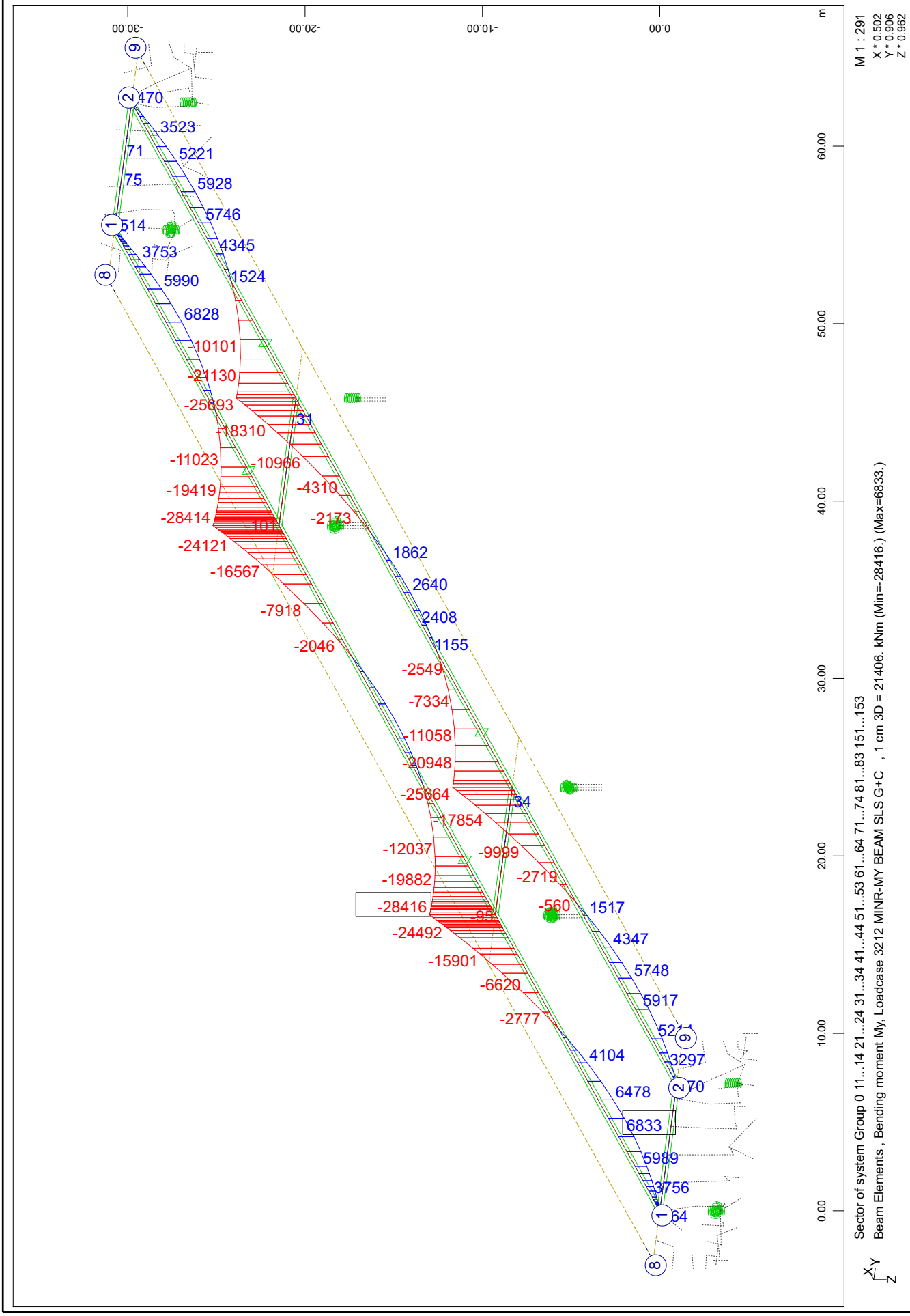

Composite bridge 38+50+38, b=14.25m, 2x2HL1100R HISTAR460 , slab 0.30m C30/37
Results for SLS characteristic part-combinations of loads: Q+F+T

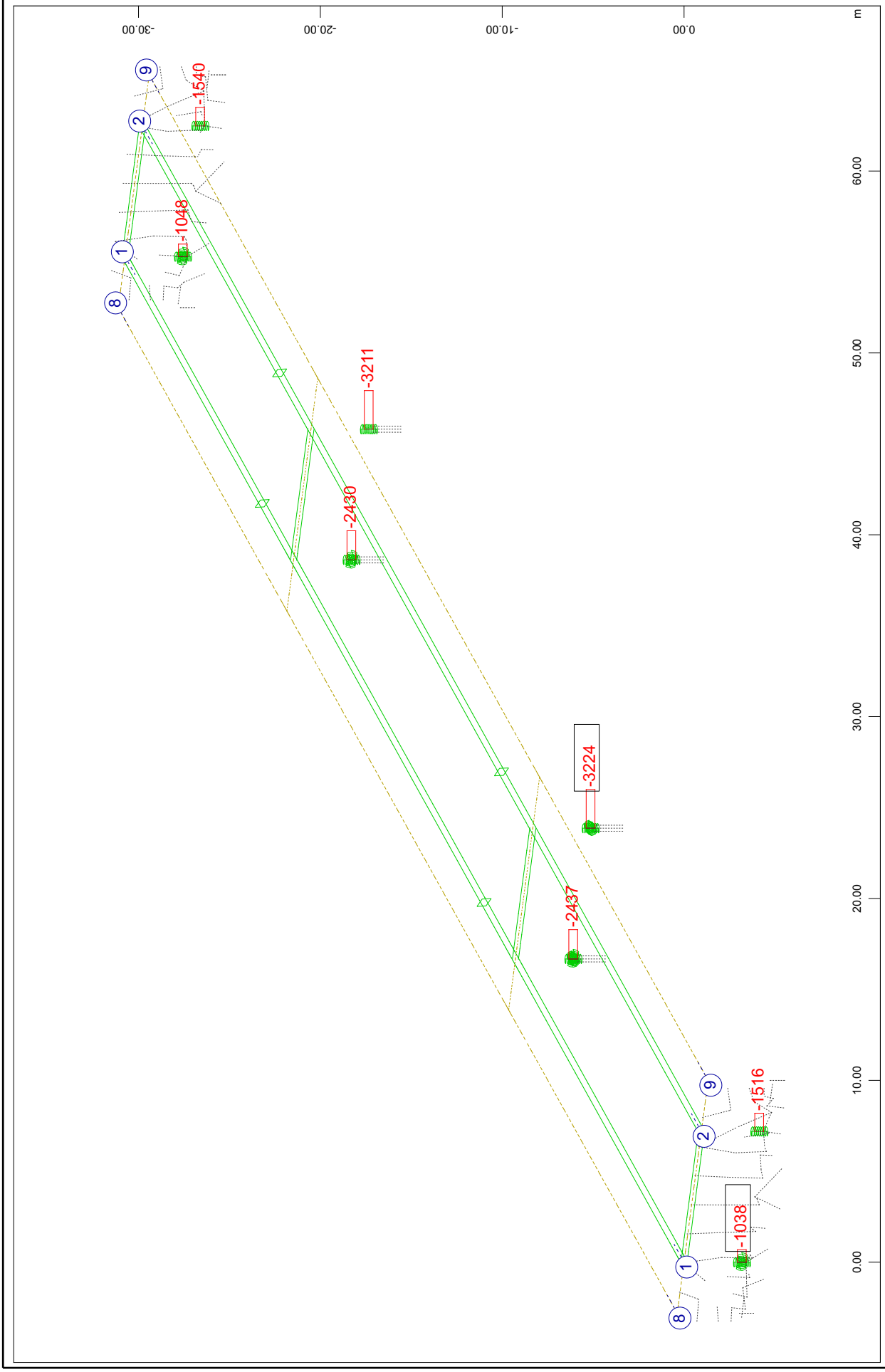

SOFiSTiK AG - www.sofistik.de

Composite bridge 38+50+38, b=14.25m, 2x2HL1100R HISTAR460 , slab 0.30m C30/37
Results for SLS characteristic part-combinations of loads: Q+F+T

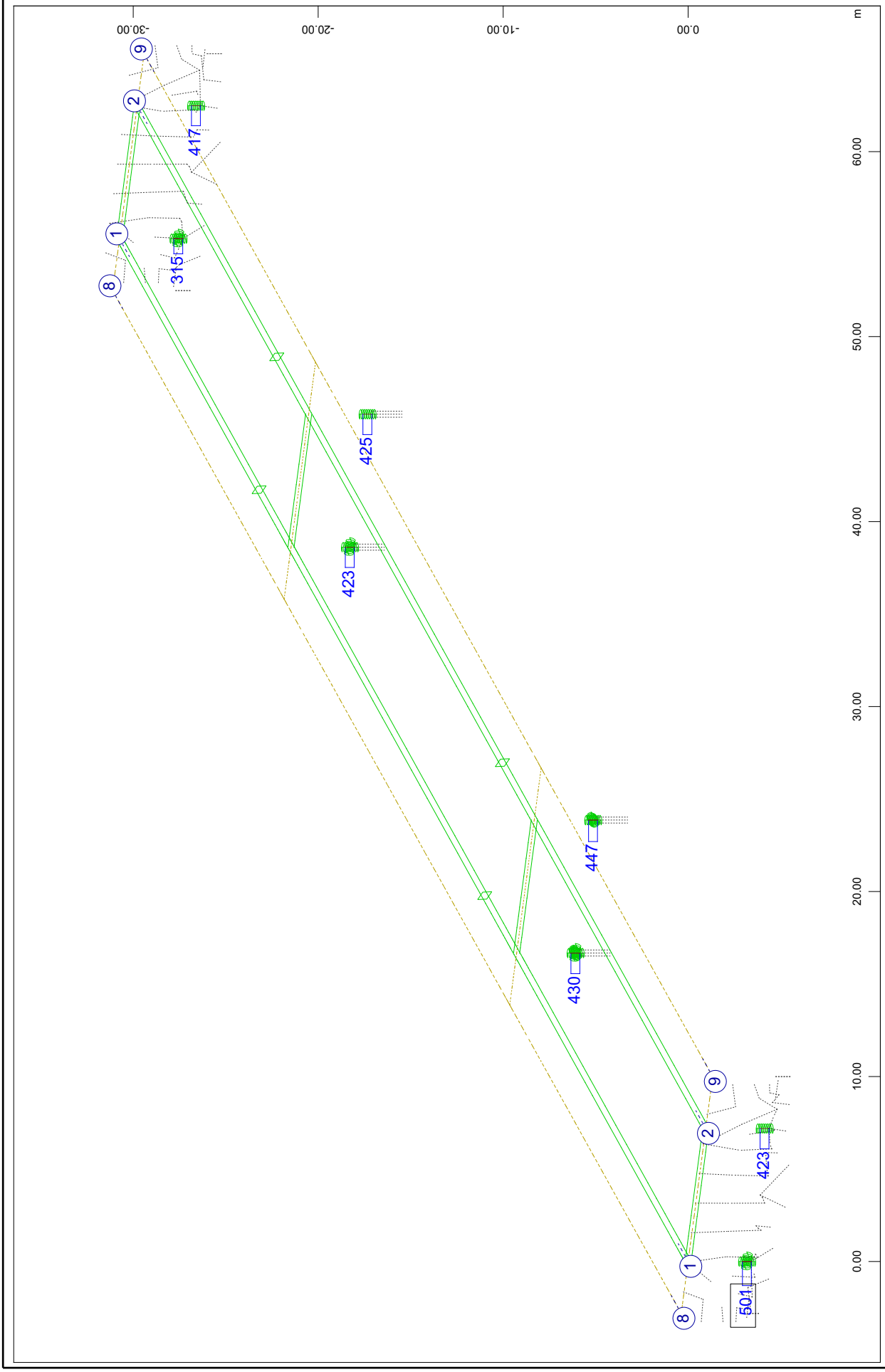

SOFiSTiK AG - www.sofistik.de

Composite bridge 38+50+38, b=14.25m, 2x2HL1100R HISTAR460 , slab 0.30m C30/37
Results for SLS characteristic part-combinations of loads: Q+F+T

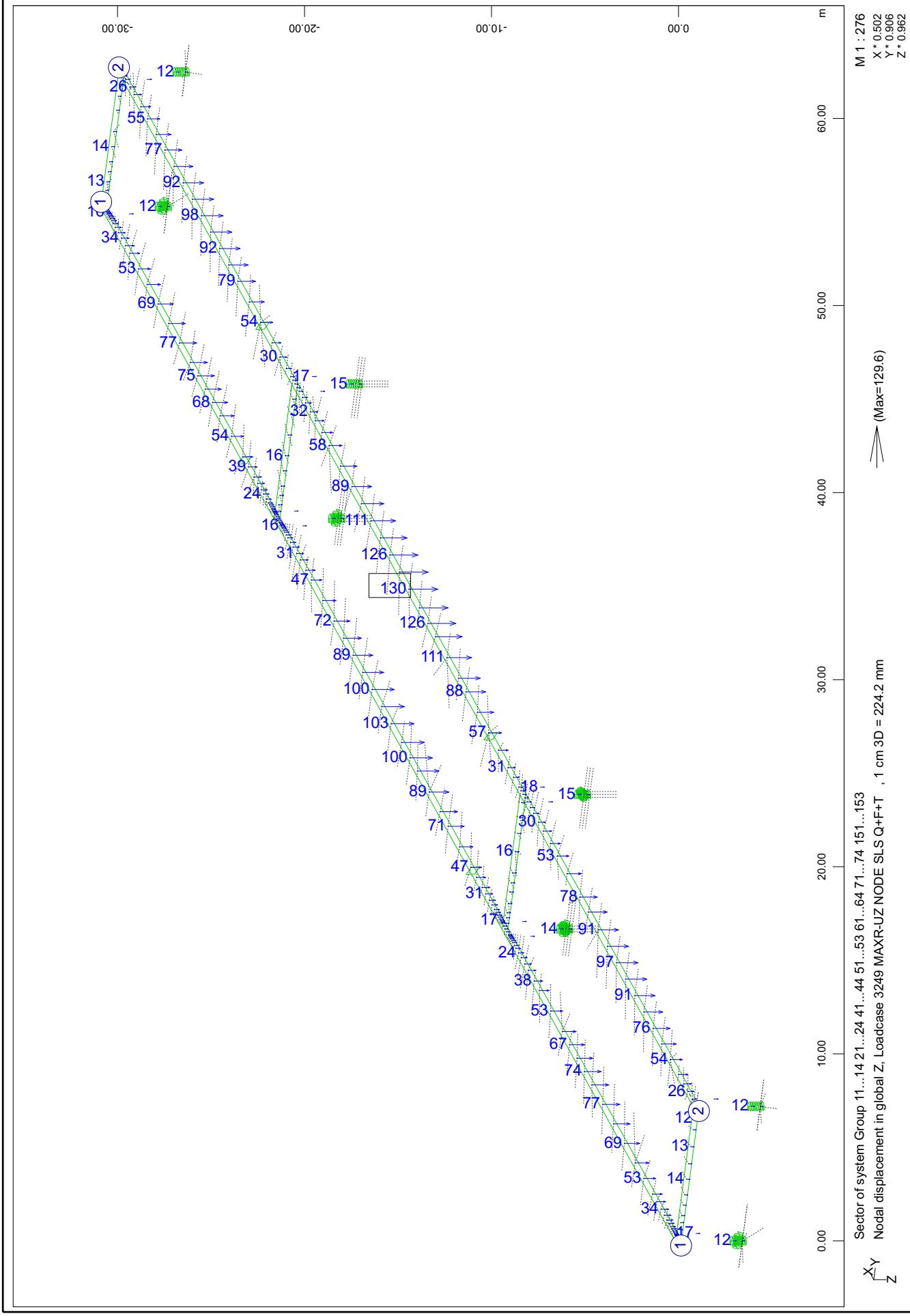

SOFiSTiK AG - www.sofistik.de

Composite bridge 38+50+38, b=14.25m, 2x2HL1100R HISTAR460 , slab 0.30m C30/37
Results for SLS characteristic part-combinations of loads: Q+F+T

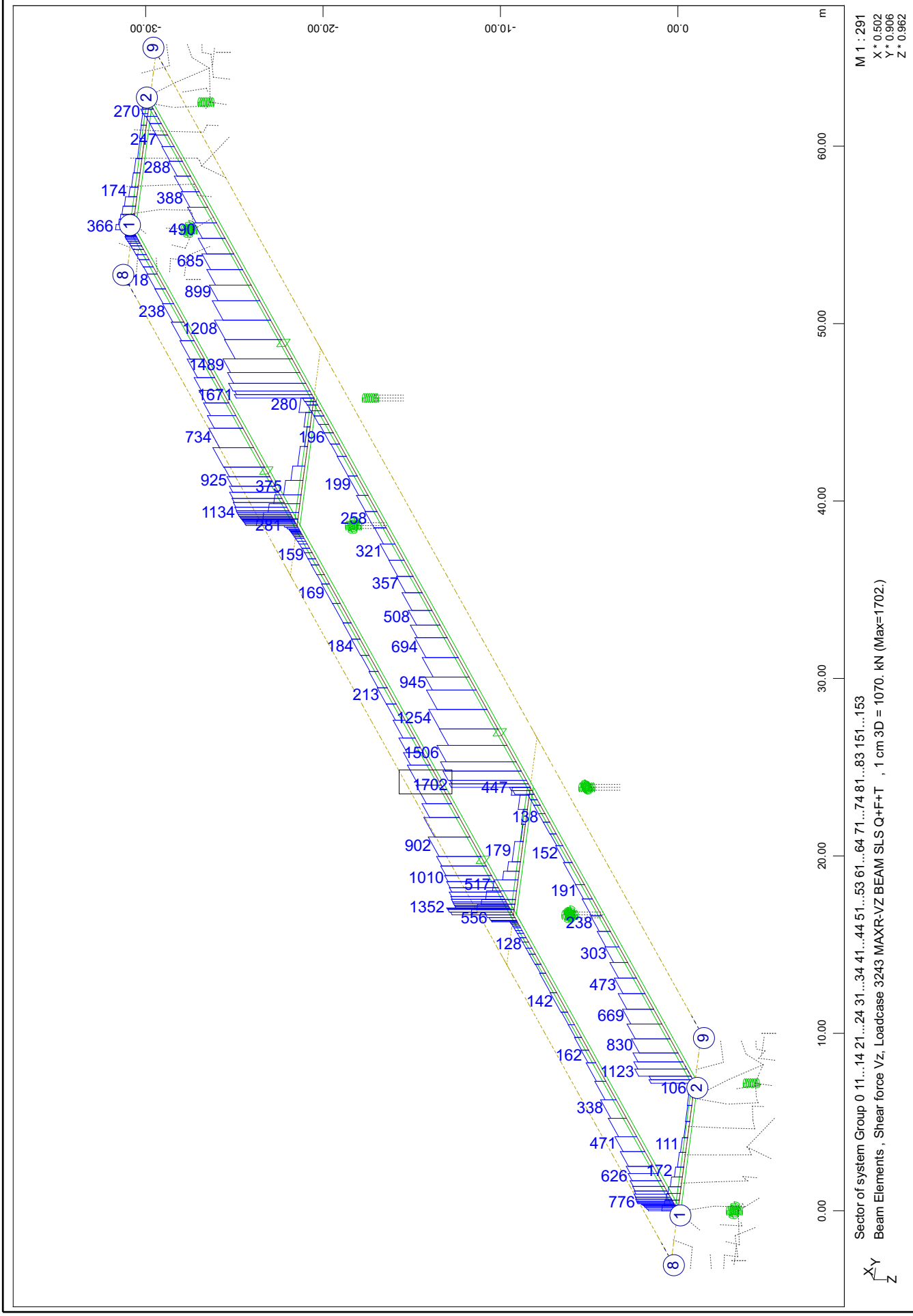

Composite bridge 38+50+38, b=14.25m, 2x2HL1100R HISTAR460 , slab 0.30m C30/37
Results for SLS characteristic part-combinations of loads: Q+F+T

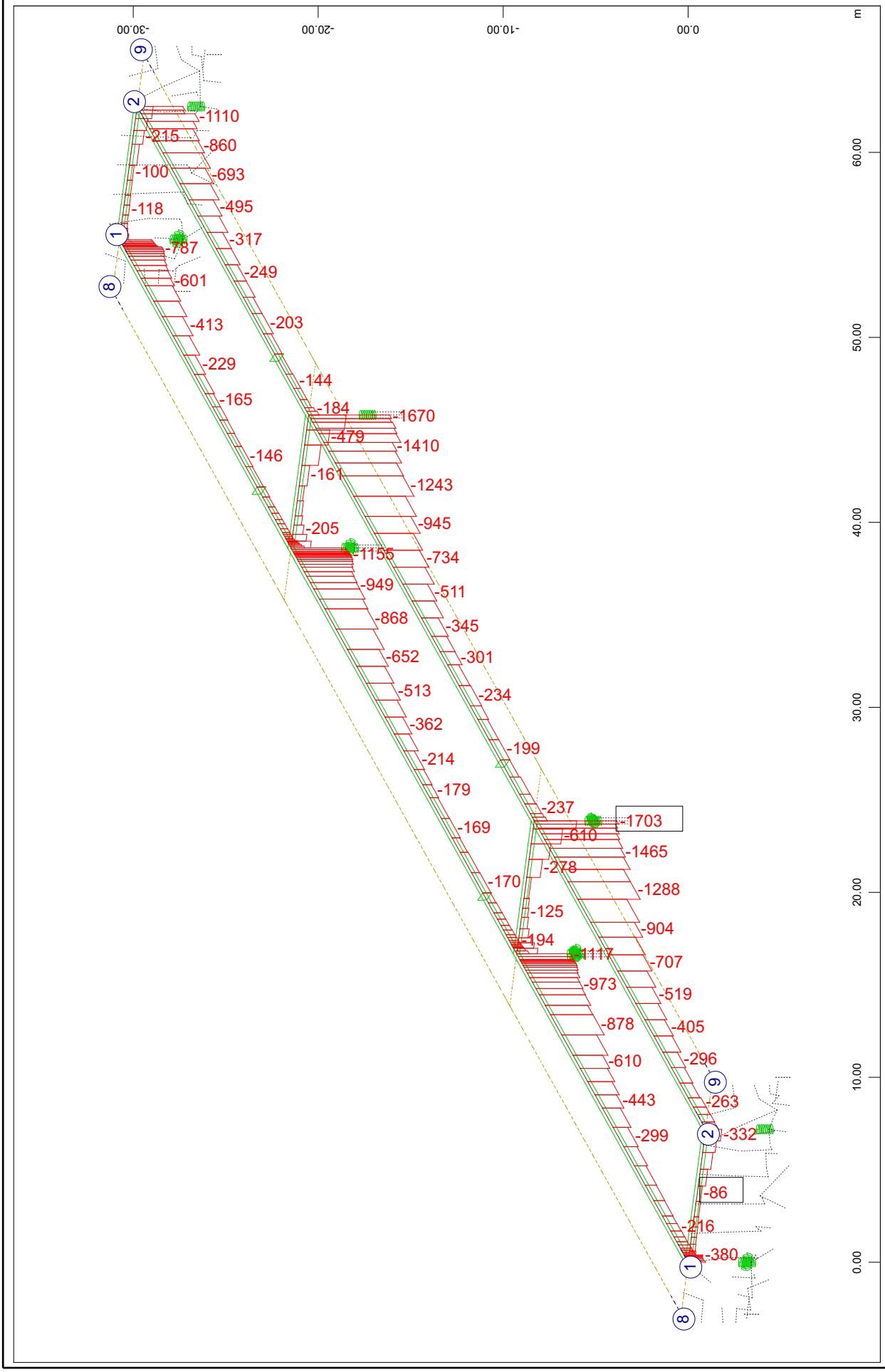

Composite bridge 38+50+38, b=14.25m, 2x2HL1100R HISTAR460 , slab 0.30m C30/37
Results for SLS characteristic part-combinations of loads: Q+F+T

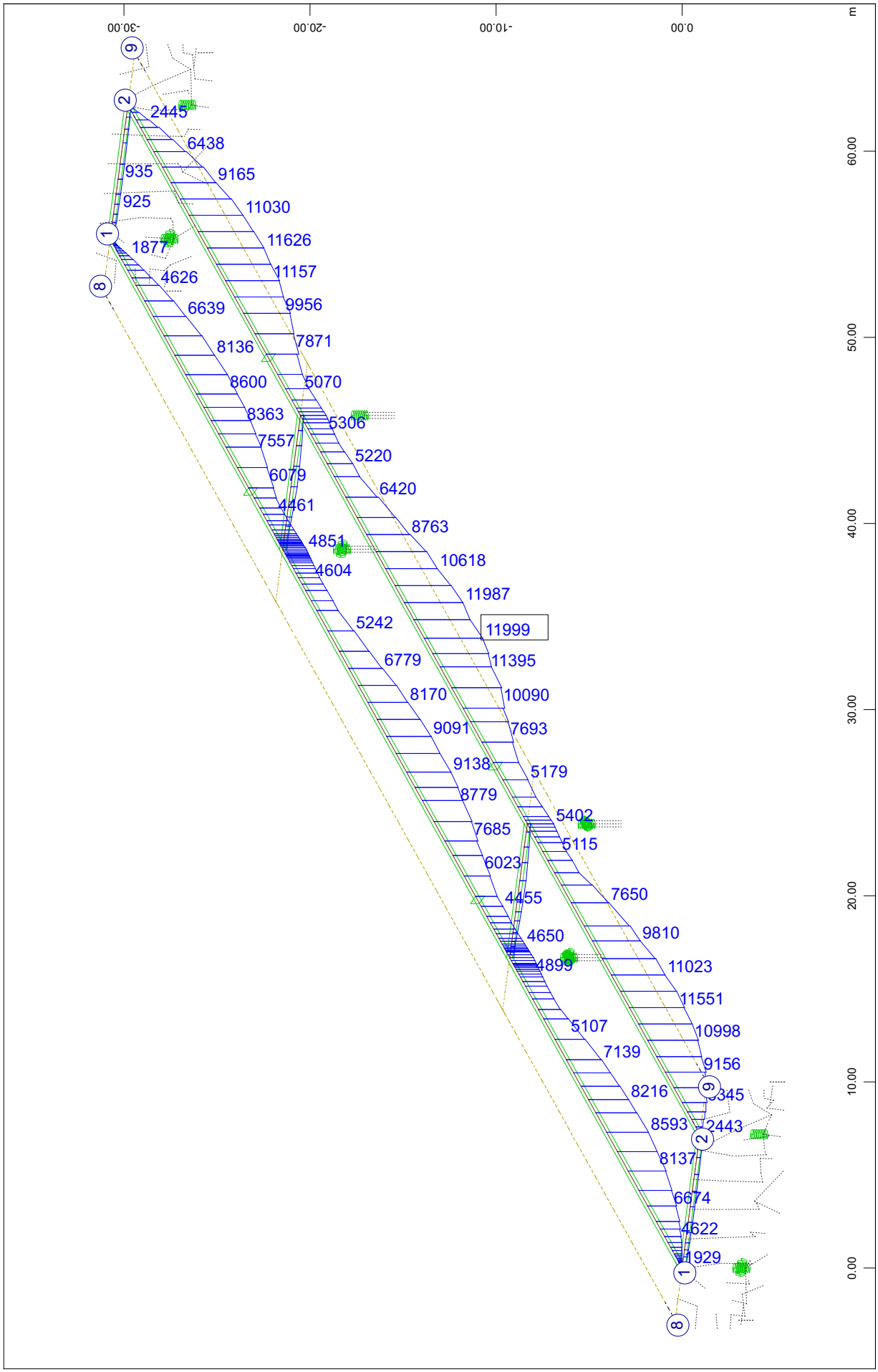

Composite bridge 38+50+38, b=14.25m, 2x2HL1100R HISTAR460 , slab 0.30m C30/37
Results for SLS characteristic part-combinations of loads: Q+F+T

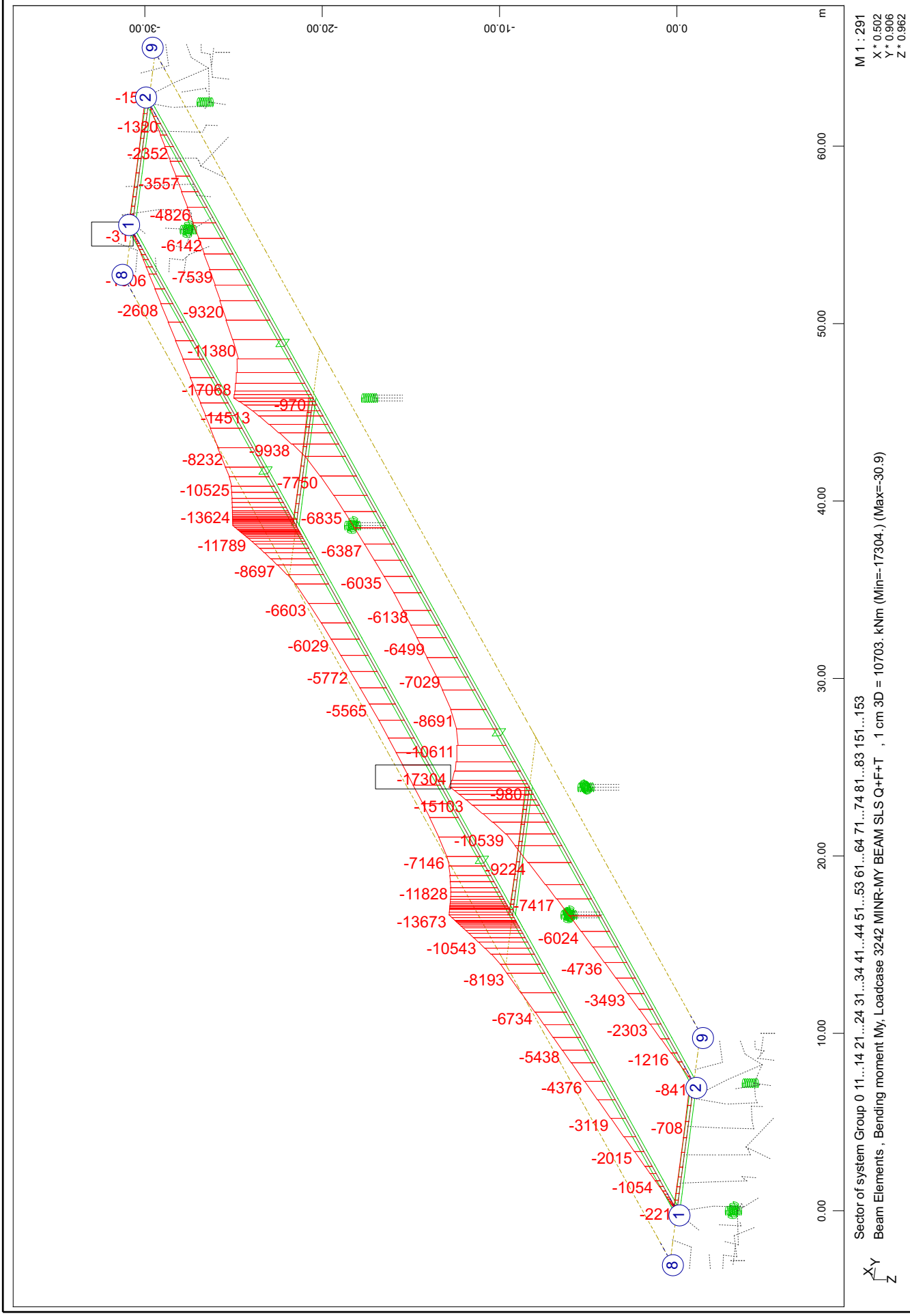

Composite bridge 38+50+38, b=14.25m, 2x2HL1100R HISTAR460 , slab 0.30m C30/37
Results for ULS design part-combinations of loads: G+C

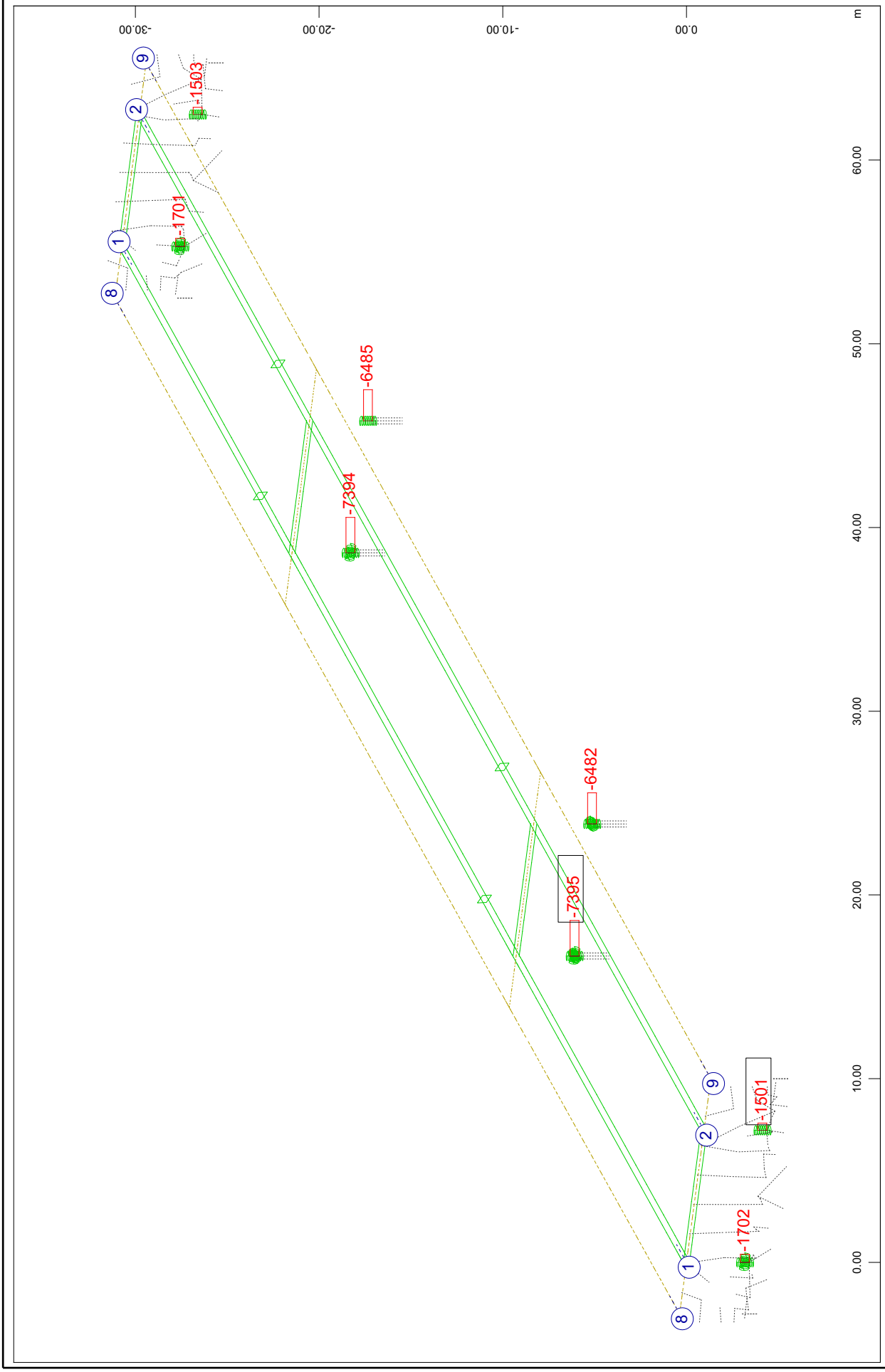

SOFiSTiK AG - www.sofistik.de

Composite bridge 38+50+38, b=14.25m, 2x2HL1100R HISTAR460 , slab 0.30m C30/37
Results for ULS design part-combinations of loads: G+C

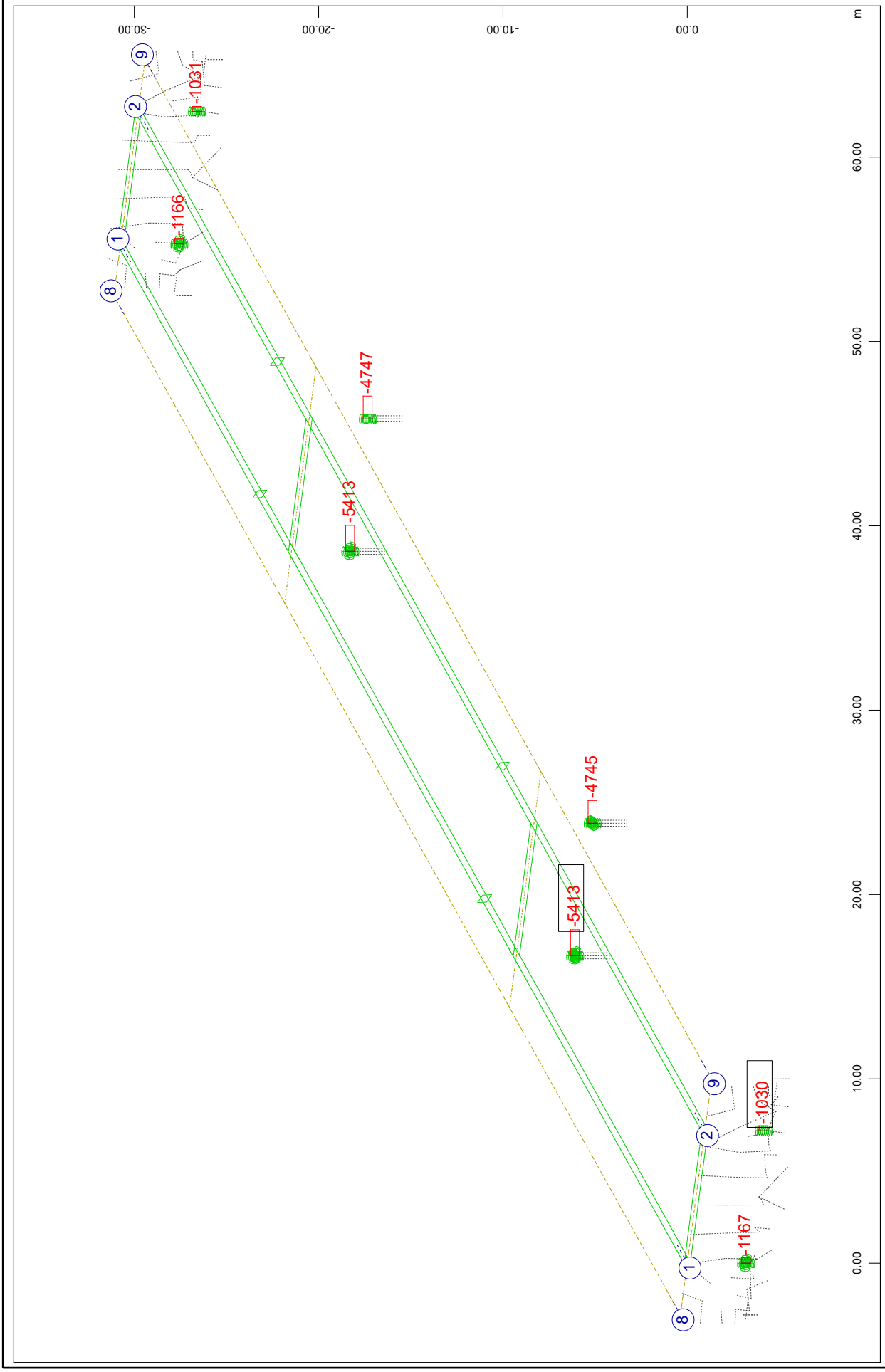

SOFiSTiK AG - www.sofistik.de

Composite bridge 38+50+38, b=14.25m, 2x2HL1100R HISTAR460 , slab 0.30m C30/37
Results for ULS design part-combinations of loads: G+C

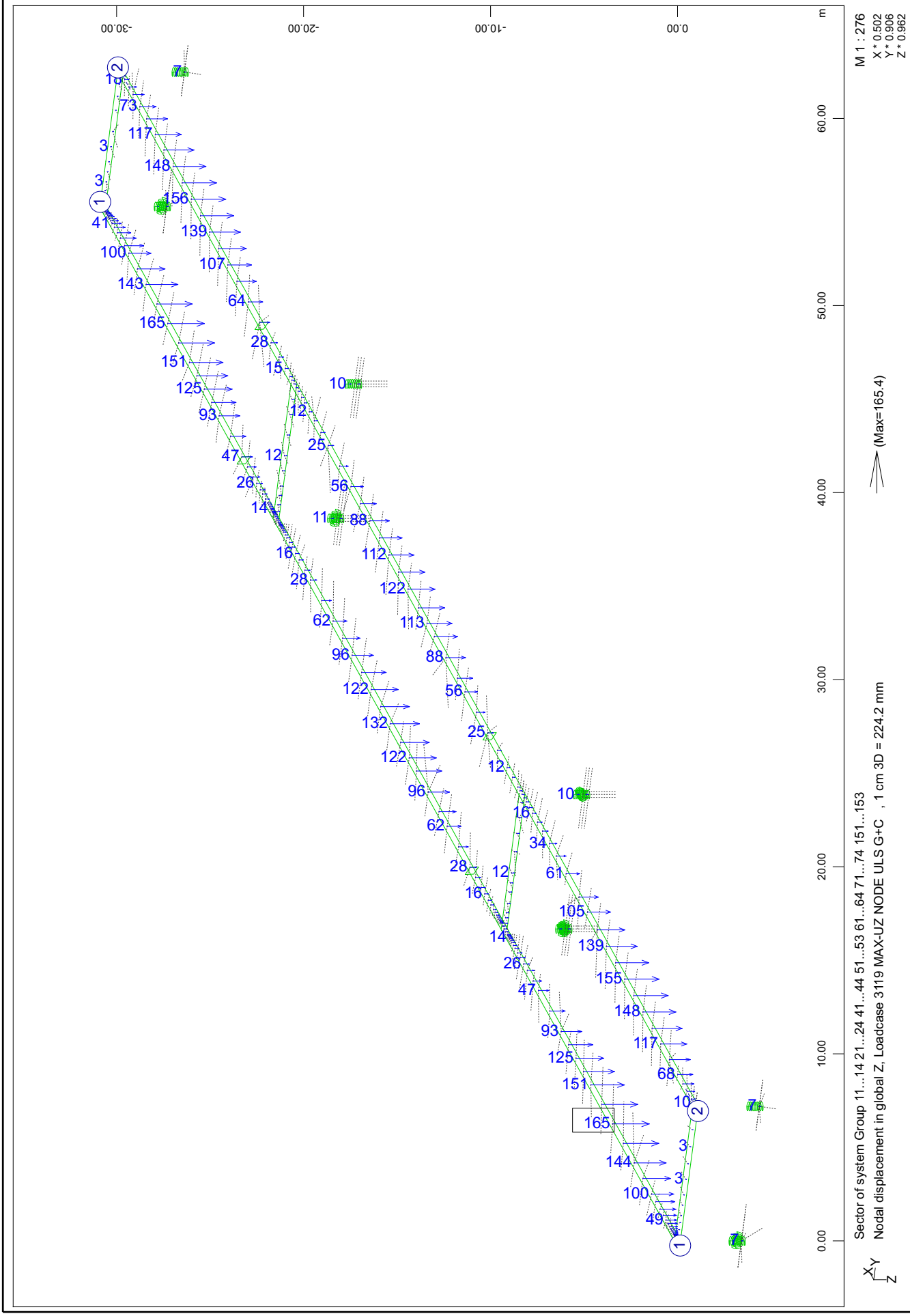

SOFiSTiK AG - www.sofistik.de

Composite bridge 38+50+38, b=14.25m, 2x2HL1100R HISTAR460 , slab 0.30m C30/37
Results for ULS design part-combinations of loads: G+C

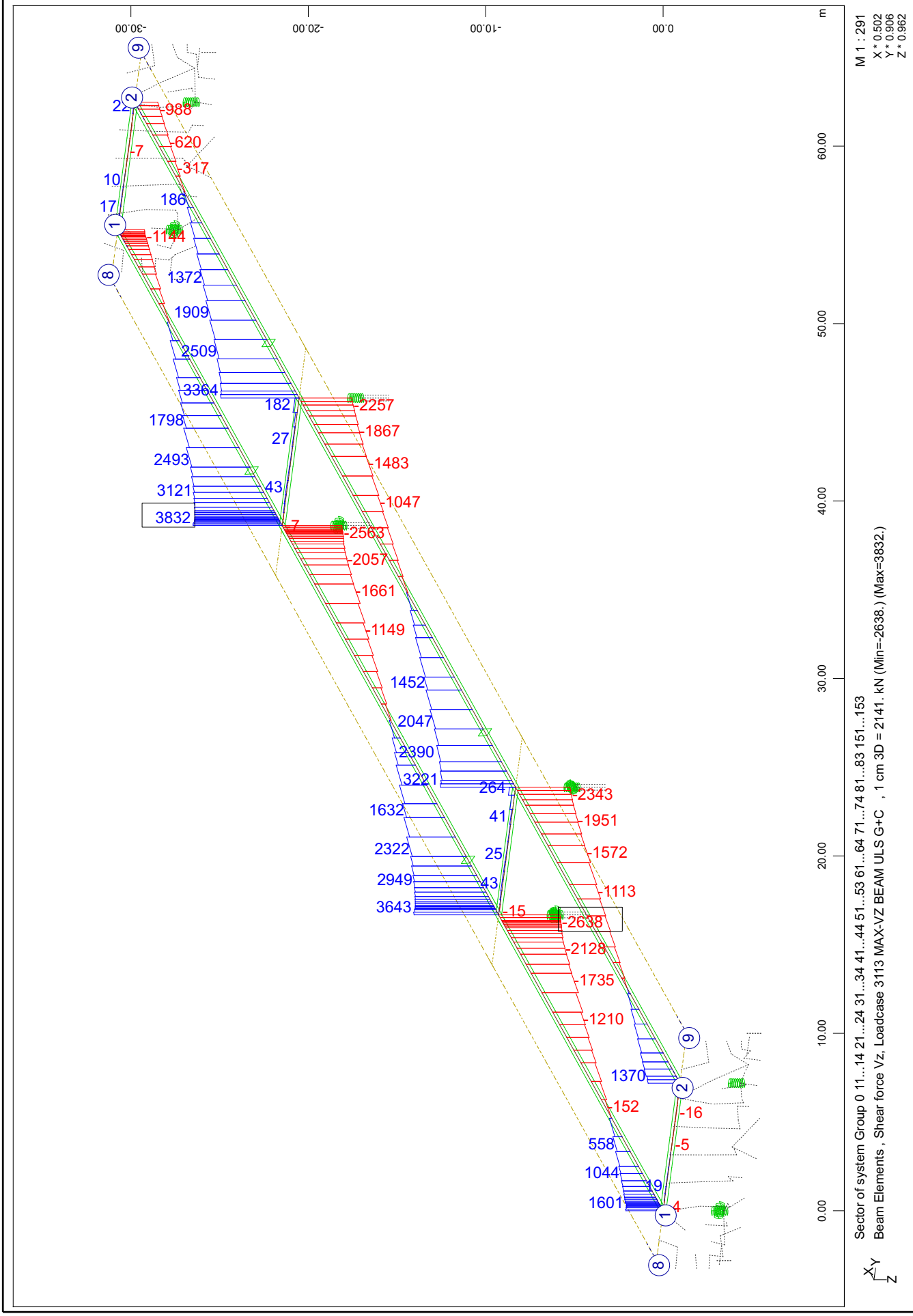

Composite bridge 38+50+38, b=14.25m, 2x2HL1100R HISTAR460 , slab 0.30m C30/37
Results for ULS design part-combinations of loads: G+C

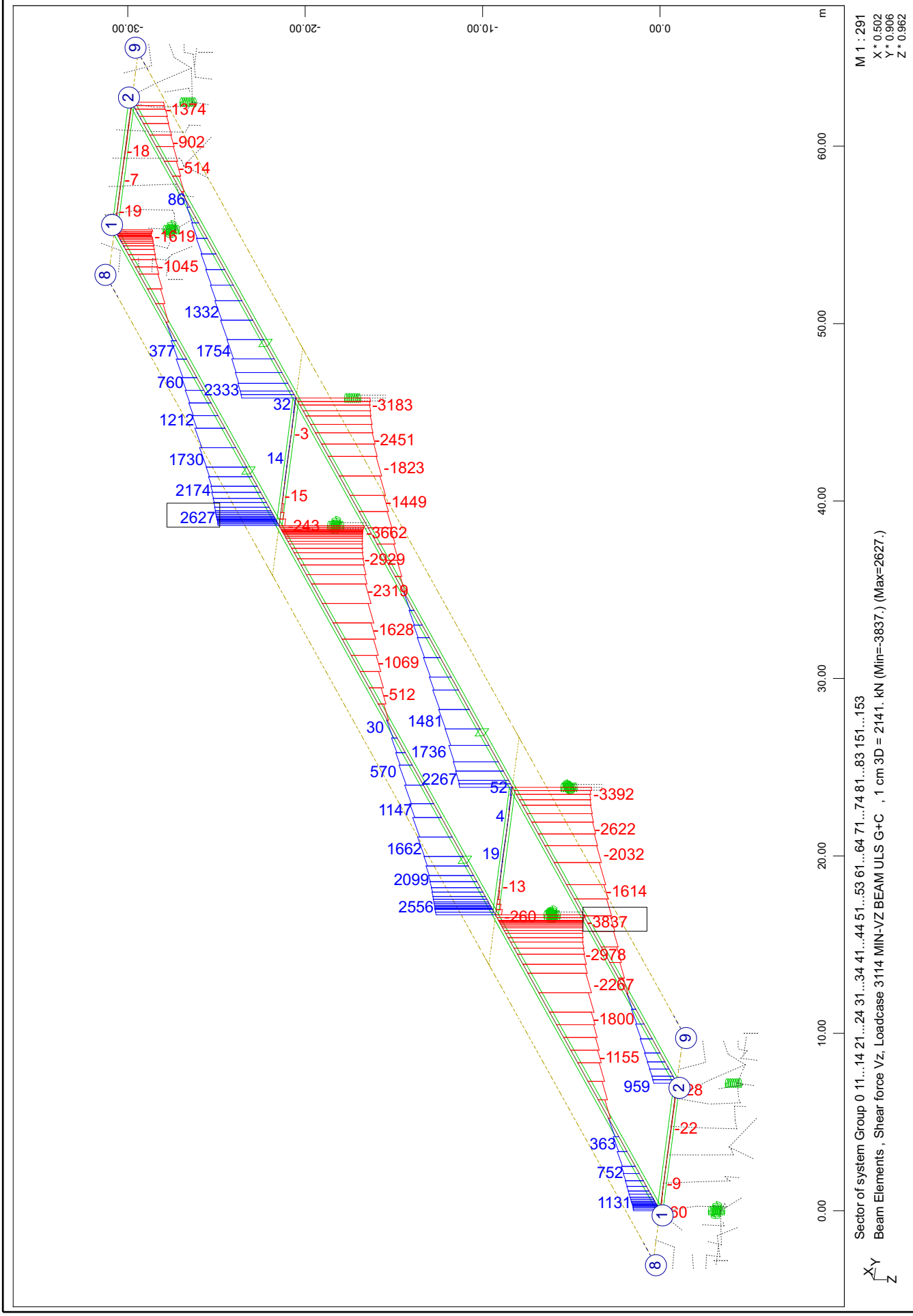

Composite bridge 38+50+38, b=14.25m, 2x2HL1100R HISTAR460 , slab 0.30m C30/37
Results for ULS design part-combinations of loads: G+C

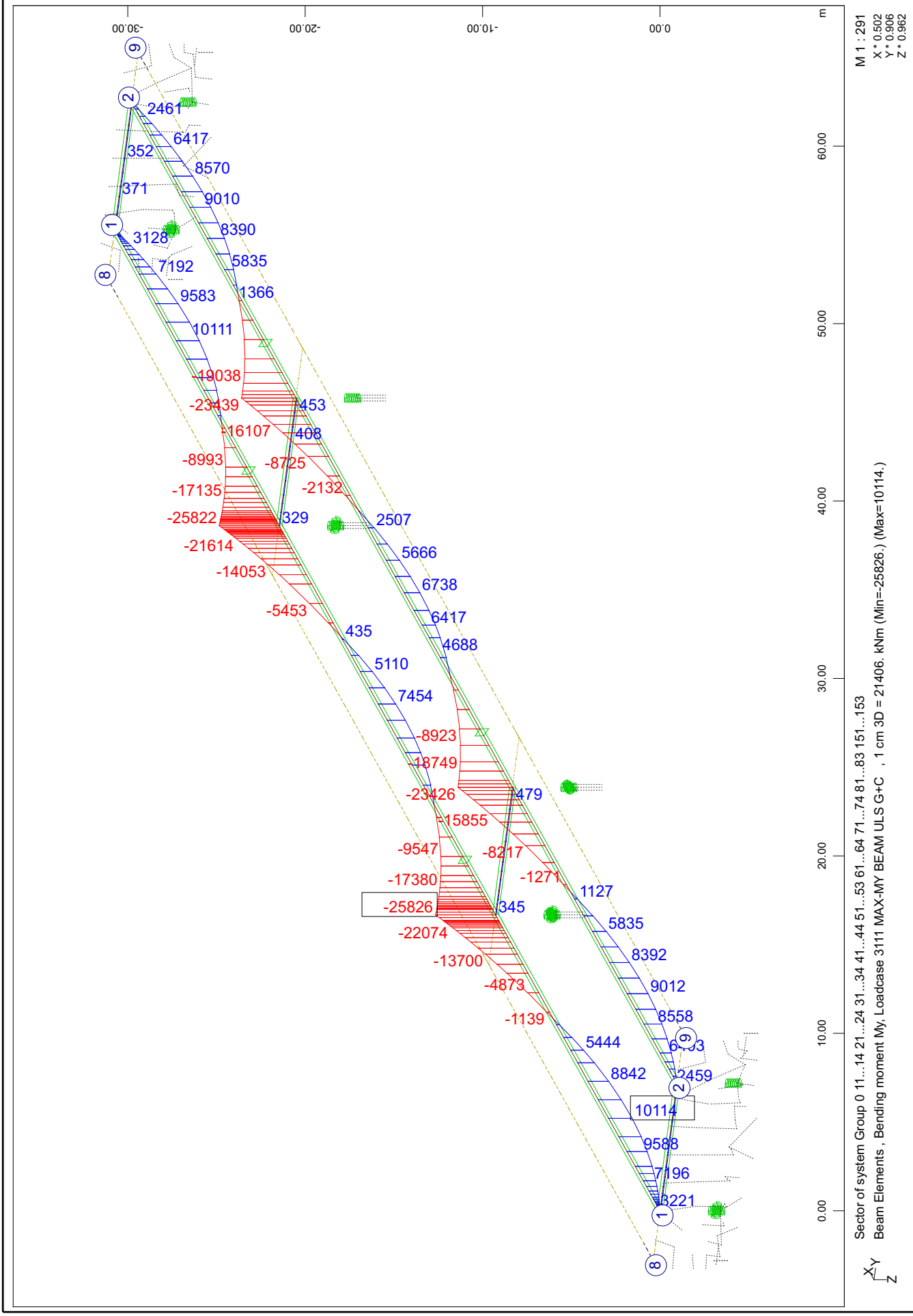

Composite bridge 38+50+38, b=14.25m, 2x2HL1100R HISTAR460 , slab 0.30m C30/37
Results for ULS design part-combinations of loads: G+C

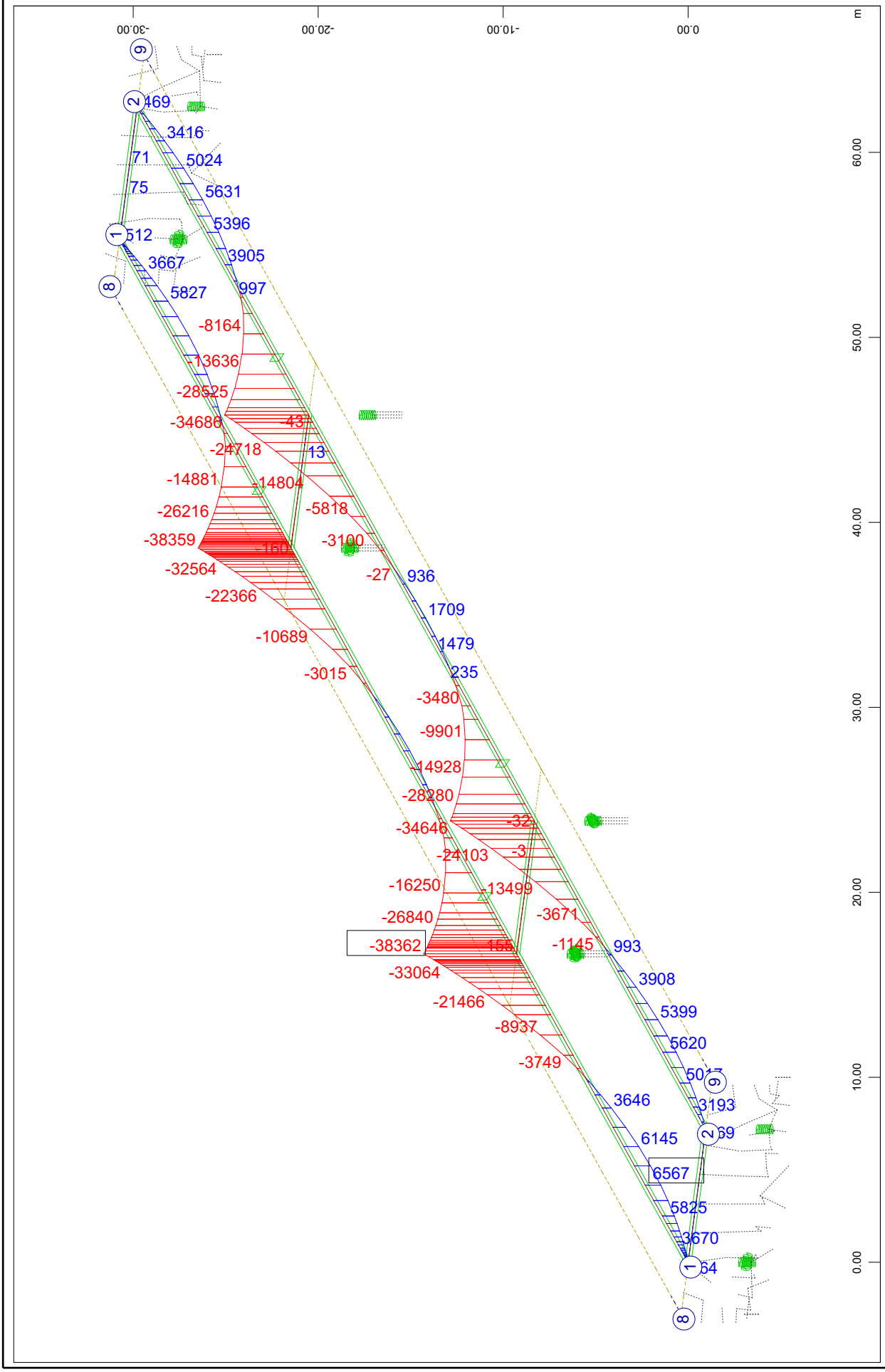

SOFiSTiK AG - www.sofistik.de

Composite bridge 38+50+38, b=14.25m, 2x2HL1100R HISTAR460 , slab 0.30m C30/37
Results for ULS design part-combinations of loads: Q+F+T

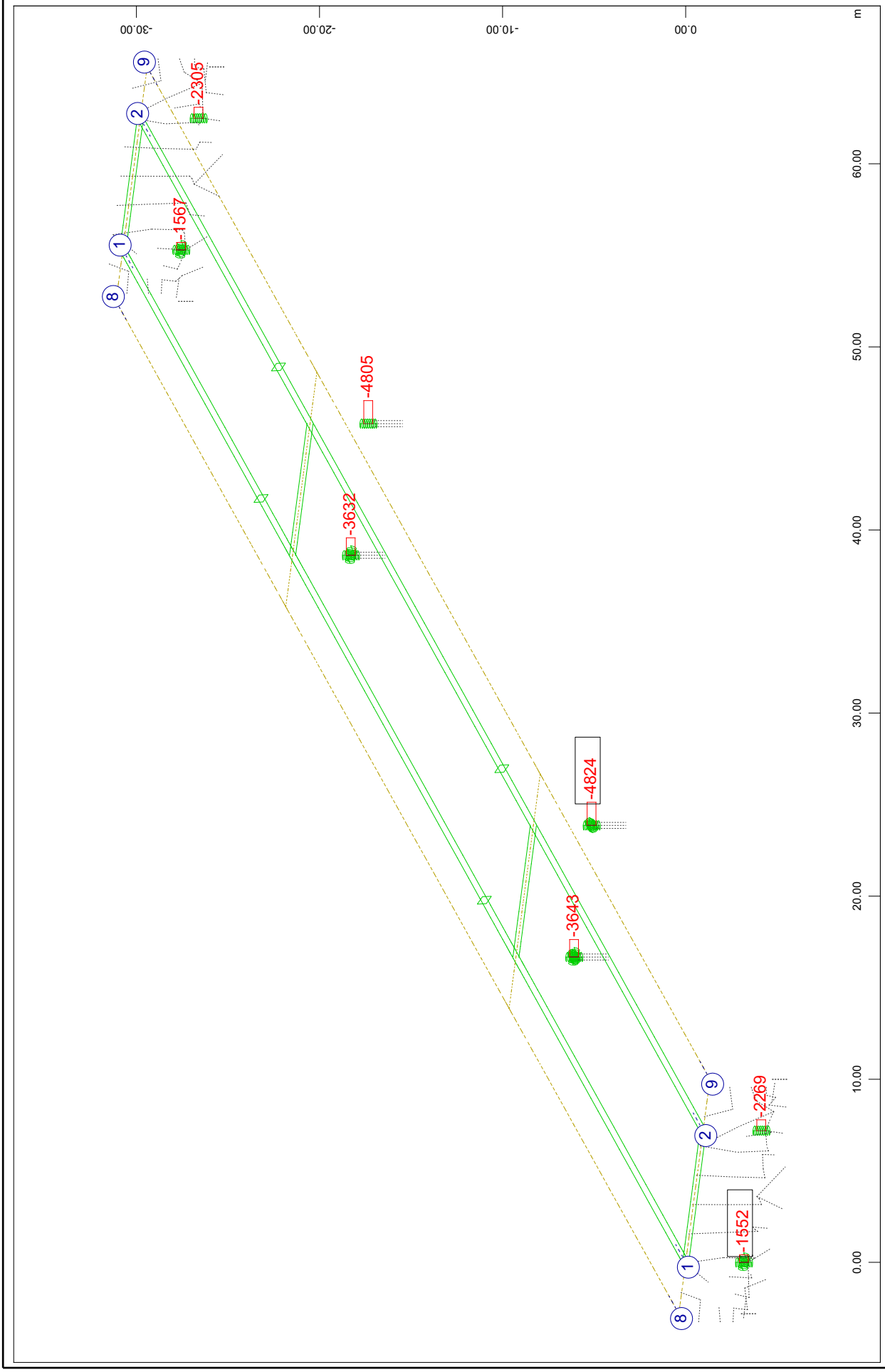

SOFiSTiK AG - www.sofistik.de

Composite bridge 38+50+38, b=14.25m, 2x2HL1100R HISTAR460 , slab 0.30m C30/37
Results for ULS design part-combinations of loads: Q+F+T

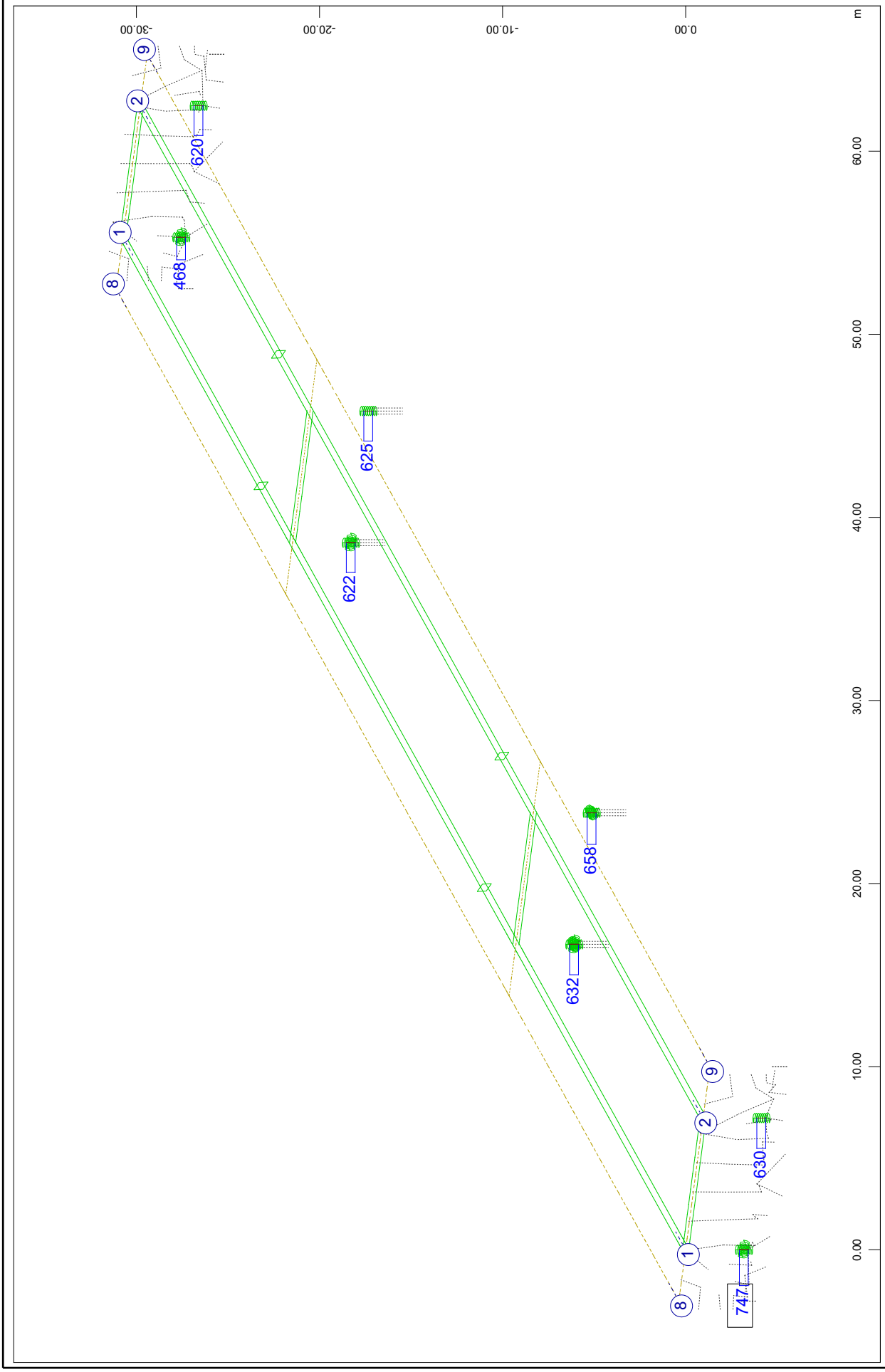

SOFiSTiK AG - www.sofistik.de

Composite bridge 38+50+38, b=14.25m, 2x2HL1100R HISTAR460 , slab 0.30m C30/37
Results for ULS design part-combinations of loads: Q+F+T

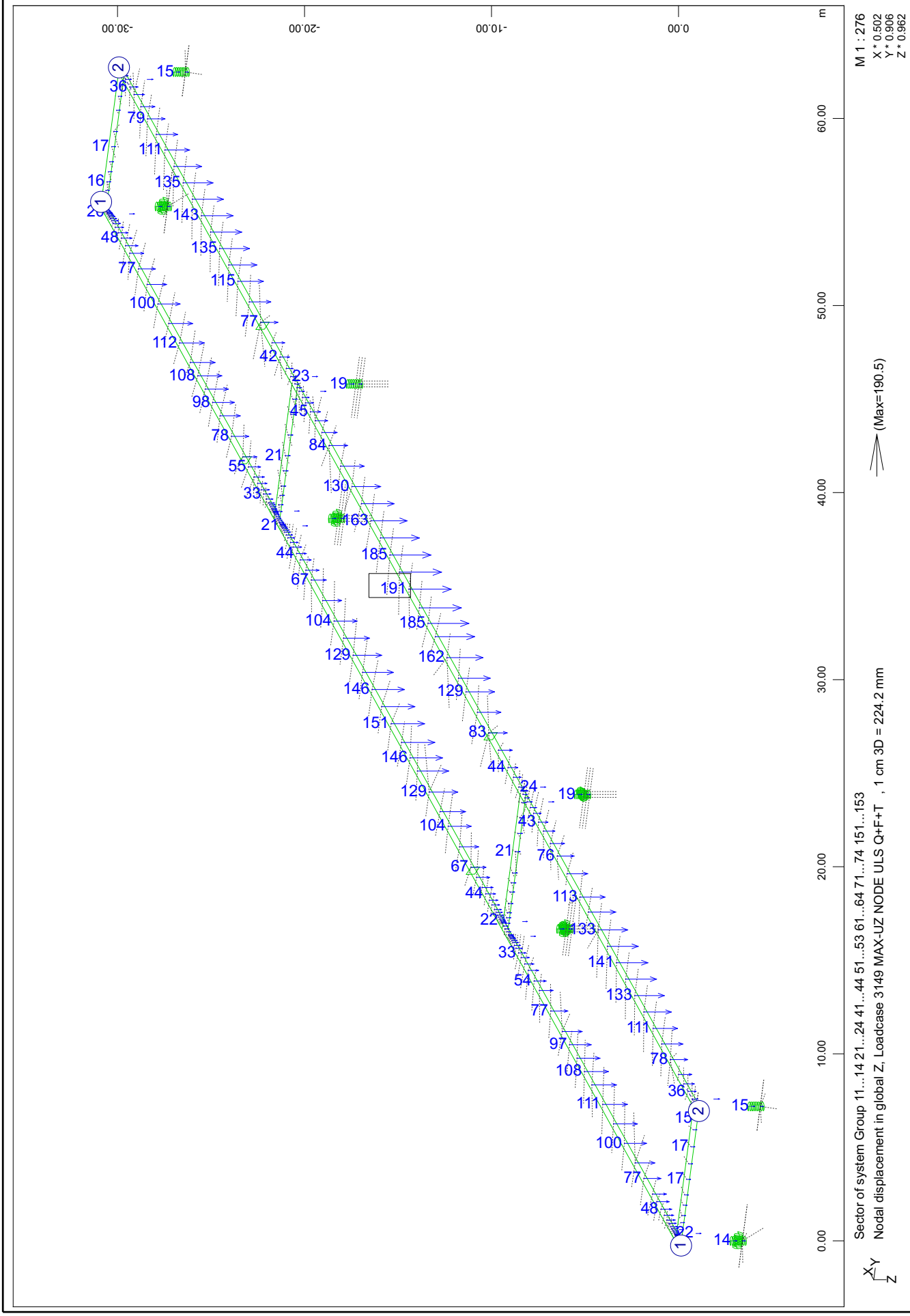

SOFiSTiK AG - www.sofistik.de

Composite bridge 38+50+38, b=14.25m, 2x2HL1100R HISTAR460 , slab 0.30m C30/37
Results for ULS design part-combinations of loads: Q+F+T

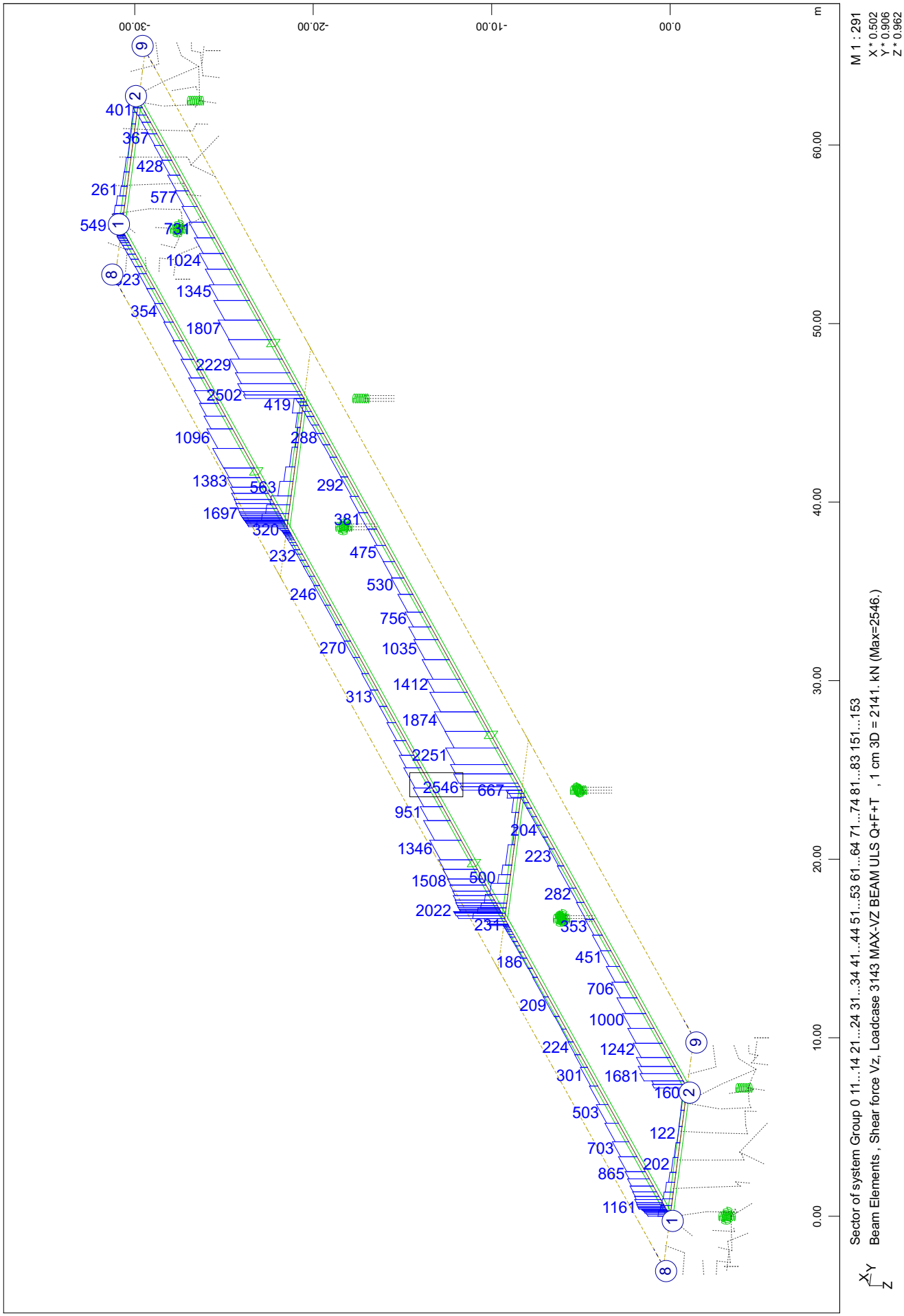

Composite bridge 38+50+38, b=14.25m, 2x2HL1100R HISTAR460 , slab 0.30m C30/37
Results for ULS design part-combinations of loads: Q+F+T

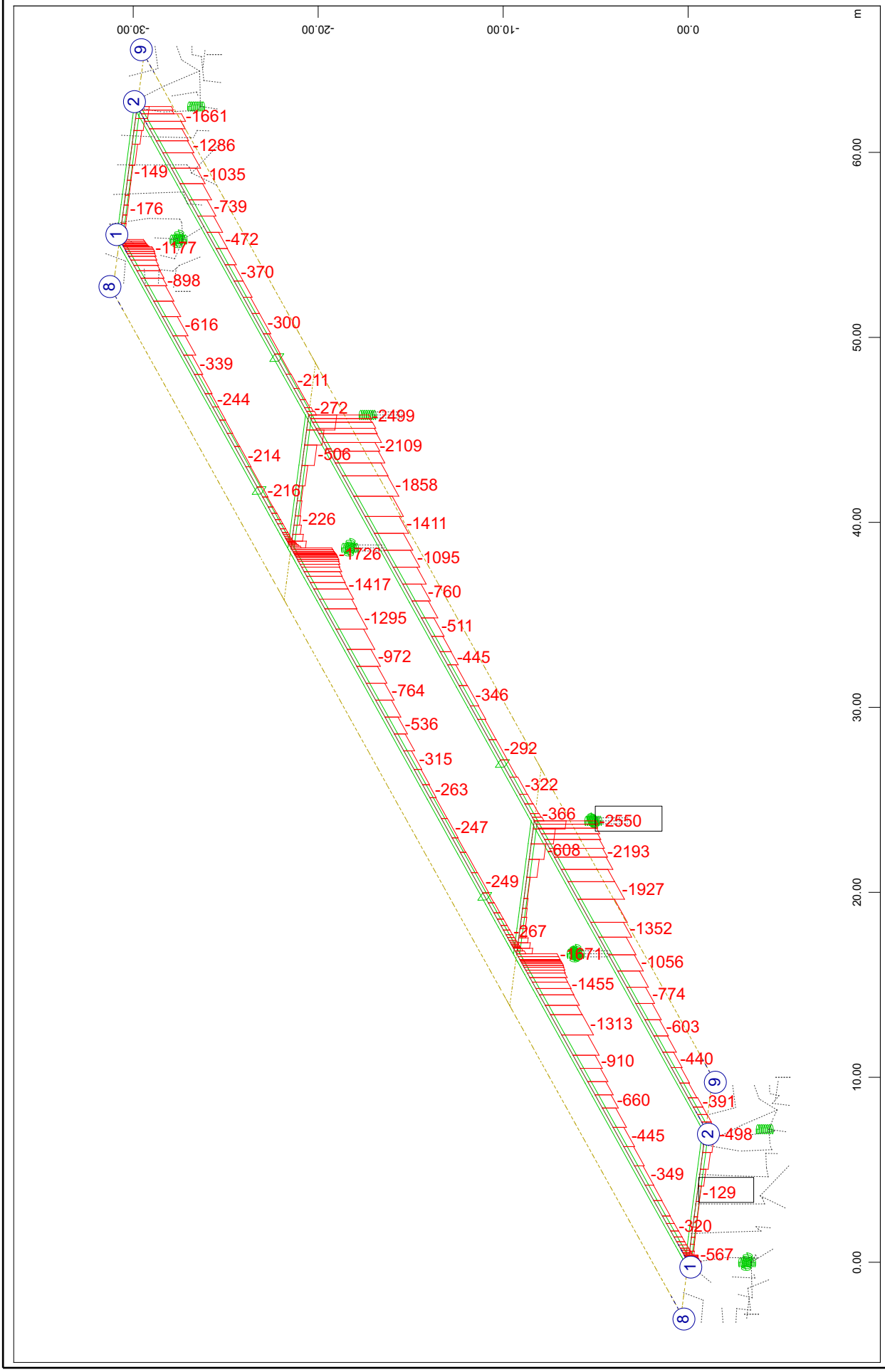

Composite bridge 38+50+38, b=14.25m, 2x2HL1100R HISTAR460 , slab 0.30m C30/37
Results for ULS design part-combinations of loads: Q+F+T

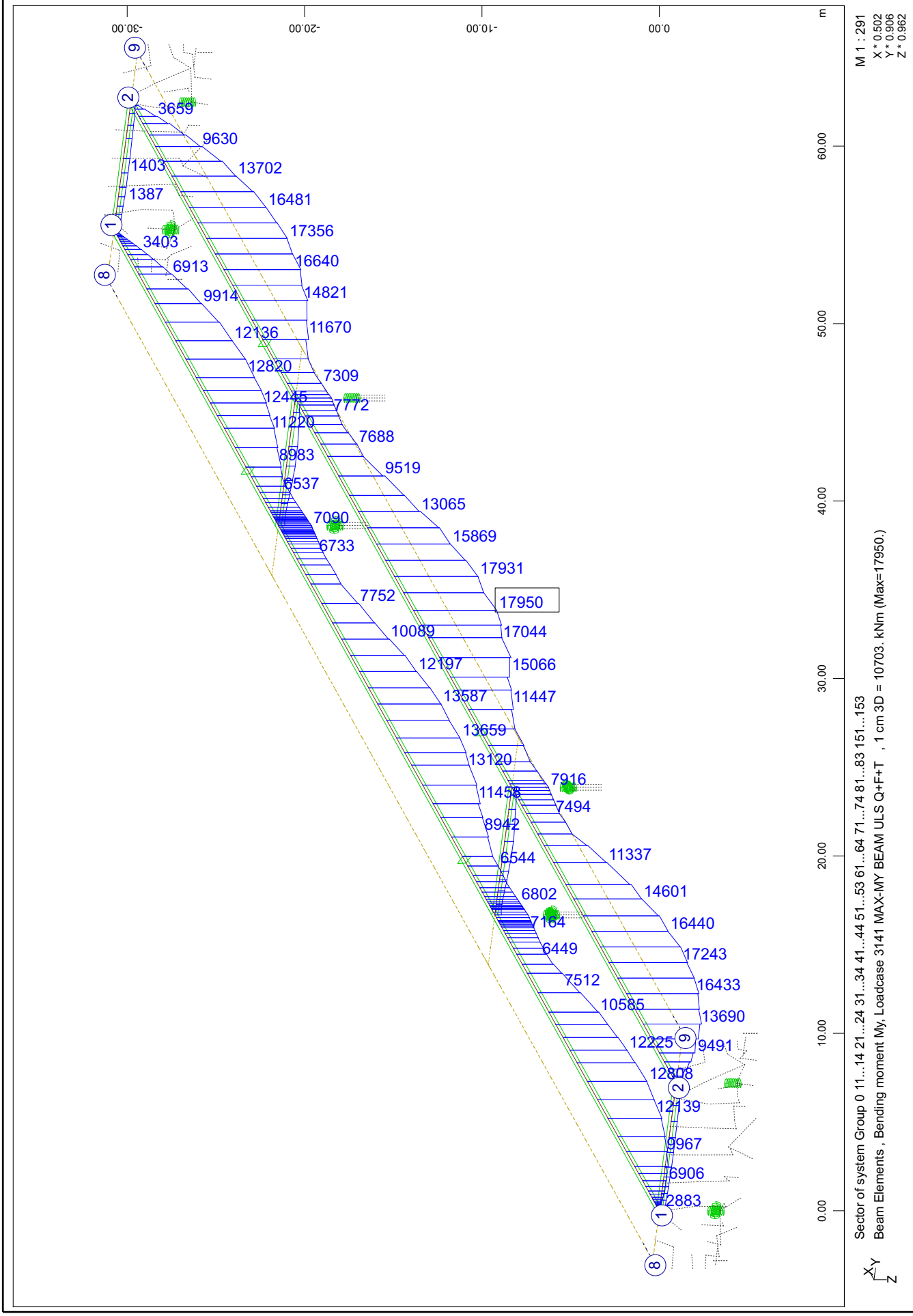

Composite bridge 38+50+38, b=14.25m, 2x2HL1100R HISTAR460 , slab 0.30m C30/37
Results for ULS design part-combinations of loads: Q+F+T

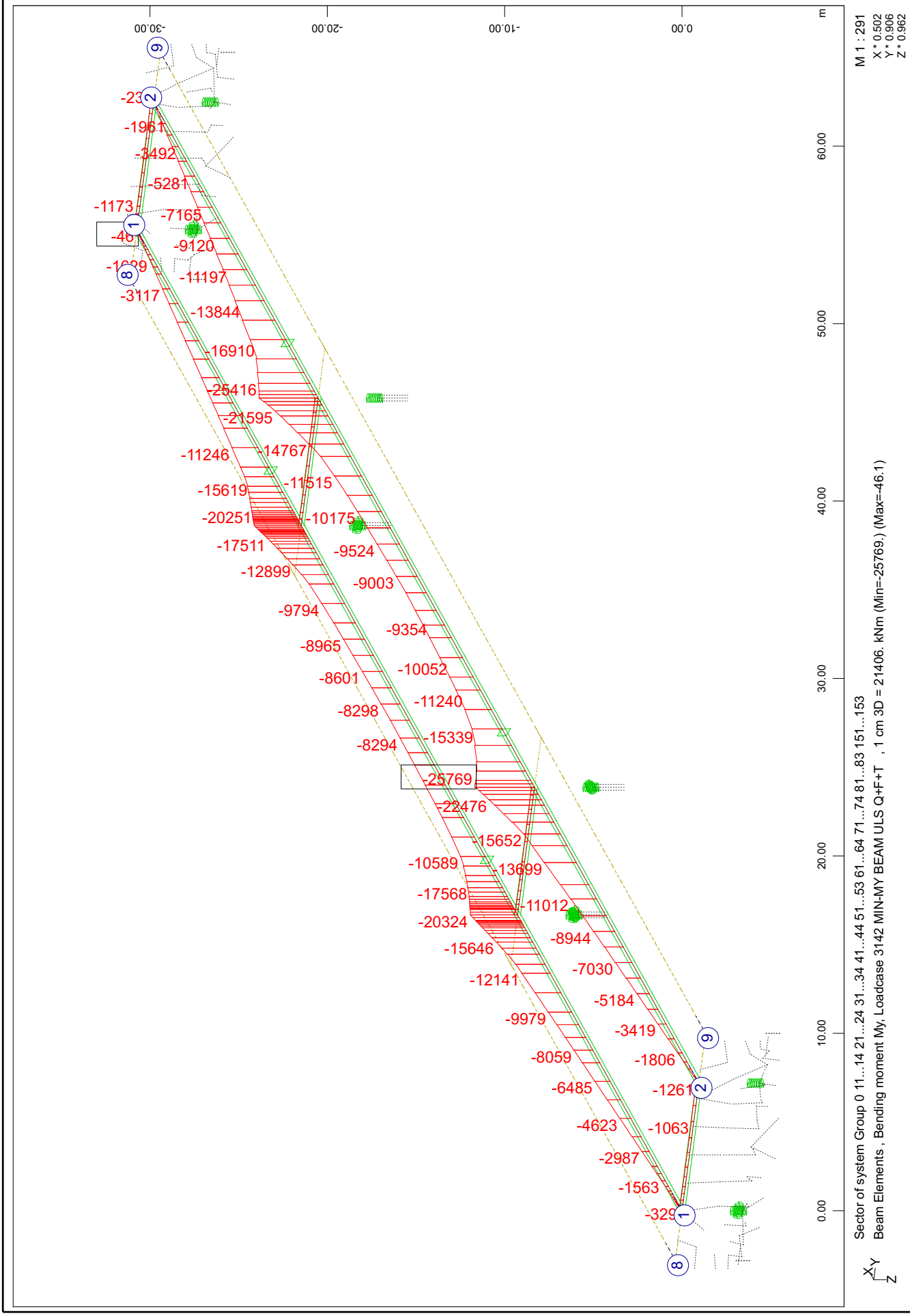

SOFiSTiK AG - www.sofistik.de

Composite bridge 38+50+38, b=14.25m, 2x2HL1100R HISTAR460 , slab 0.30m C30/37
Stresses for SLS combination (t=140days): sum G+C1+Q+F+T

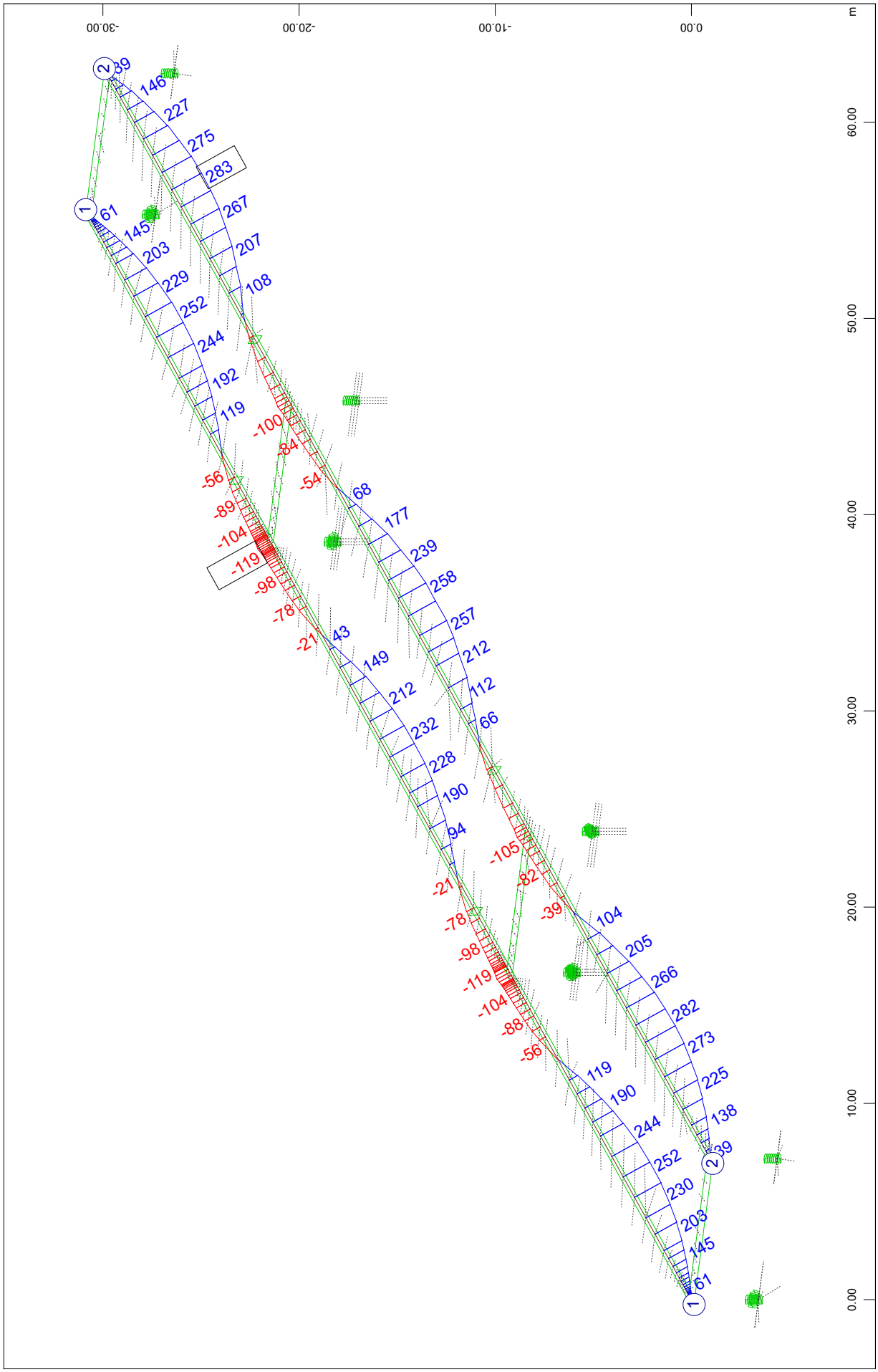

SOFiSTiK AG - www.sofistik.de

Composite bridge 38+50+38, b=14.25m, 2x2HL1100R HISTAR460 , slab 0.30m C30/37
Stresses for SLS combination (t=140days): sum G+C1+Q+F+T

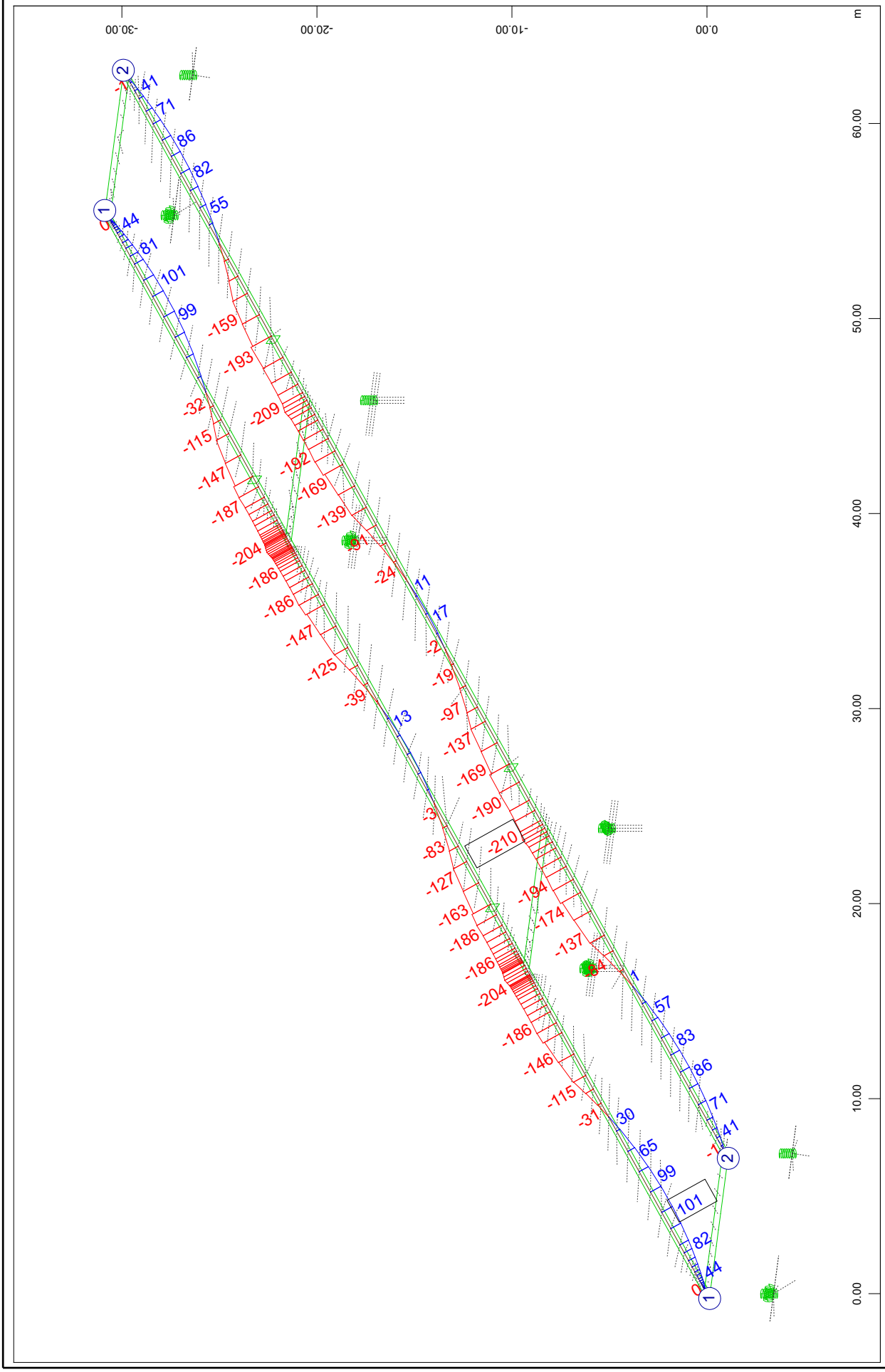

SOFiSTiK AG - www.sofistik.de

Composite bridge 38+50+38, b=14.25m, 2x2HL1100R HISTAR460 , slab 0.30m C30/37
Stresses for SLS combination (t=140days): sum G+C1+Q+F+T

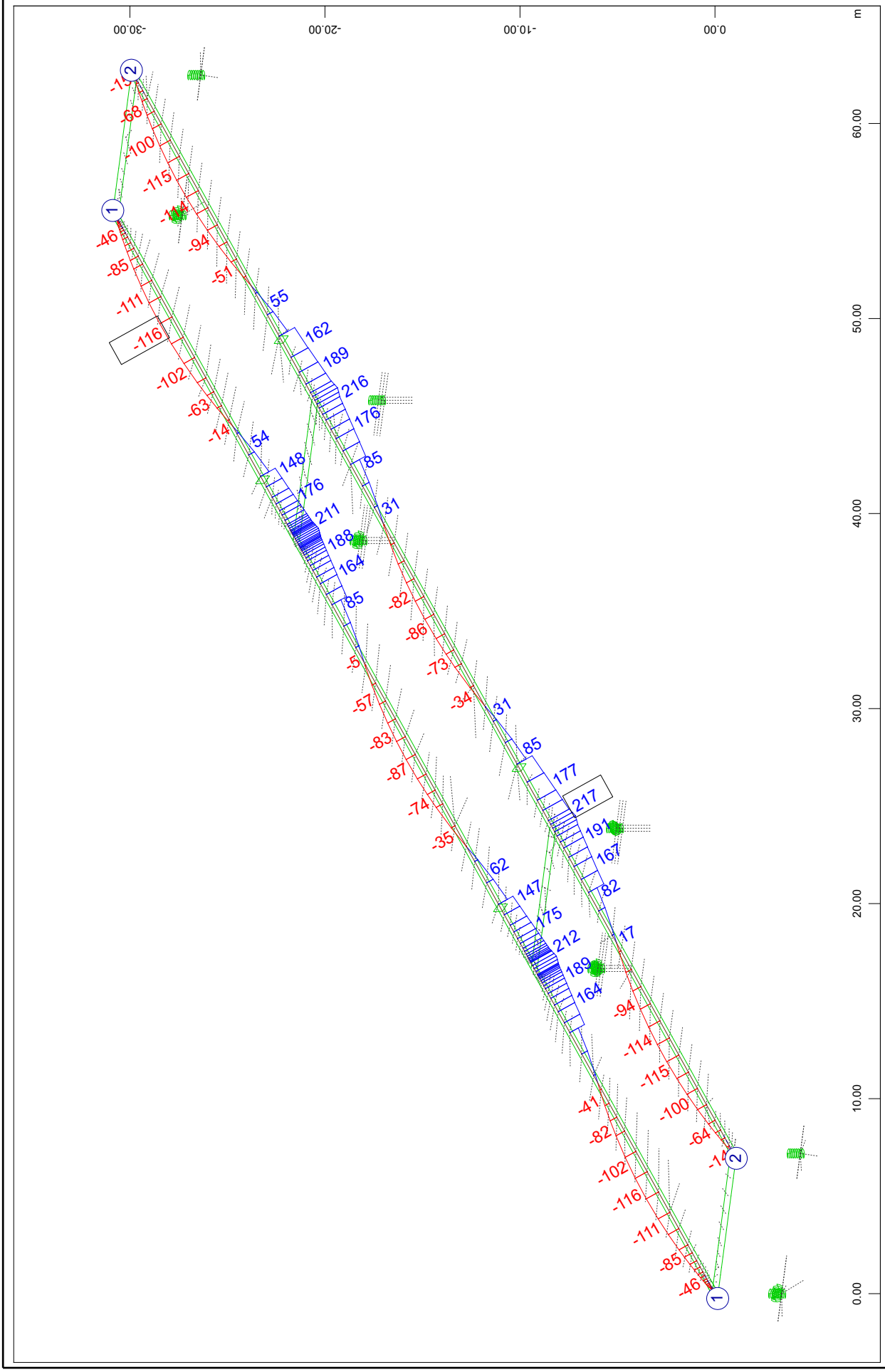

SOFiSTiK AG - www.sofistik.de

Composite bridge 38+50+38, b=14.25m, 2x2HL1100R HISTAR460 , slab 0.30m C30/37
Stresses for SLS combination (t=140days): sum G+C1+Q+F+T

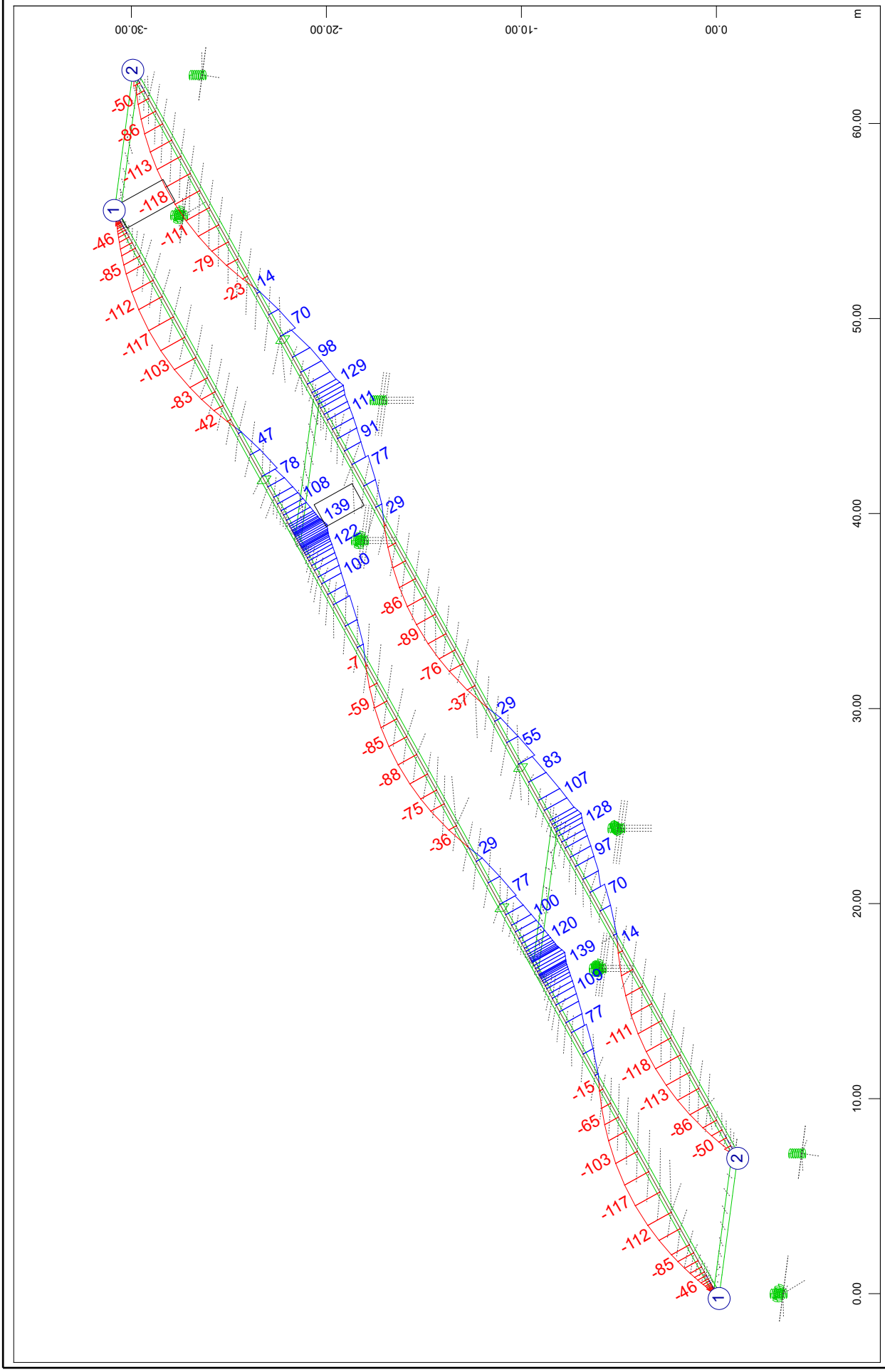

SOFiSTiK AG - www.sofistik.de

Composite bridge 38+50+38, b=14.25m, 2x2HL1100R HISTAR460 , slab 0.30m C30/37
Stresses for SLS combination (t=140days): sum G+C1+Q+F+T

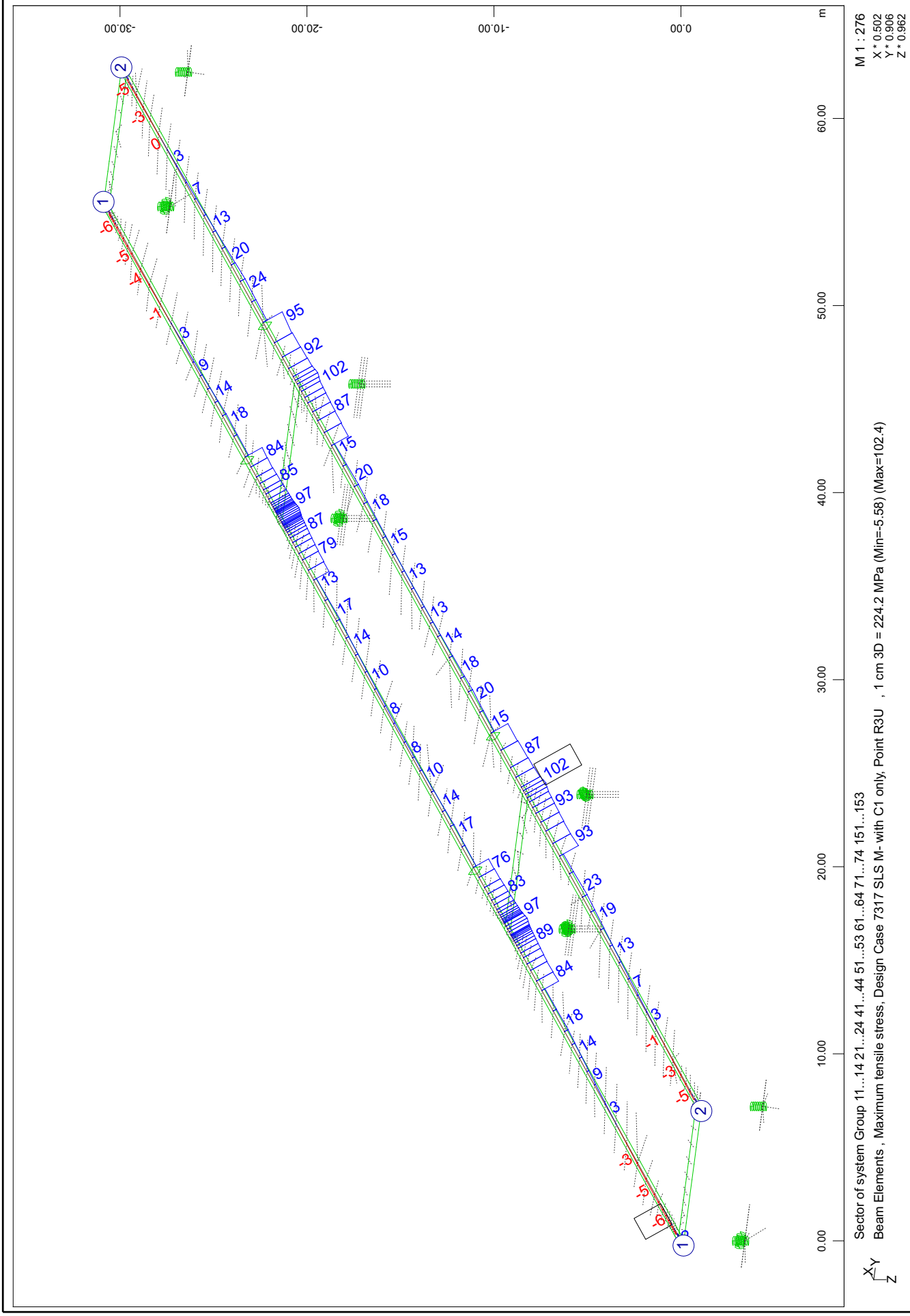

SOFiSTiK AG - www.sofistik.de

Composite bridge 38+50+38, b=14.25m, 2x2HL1100R HISTAR460 , slab 0.30m C30/37
Stresses for SLS combination (t=140days): sum G+C1+Q+F+T

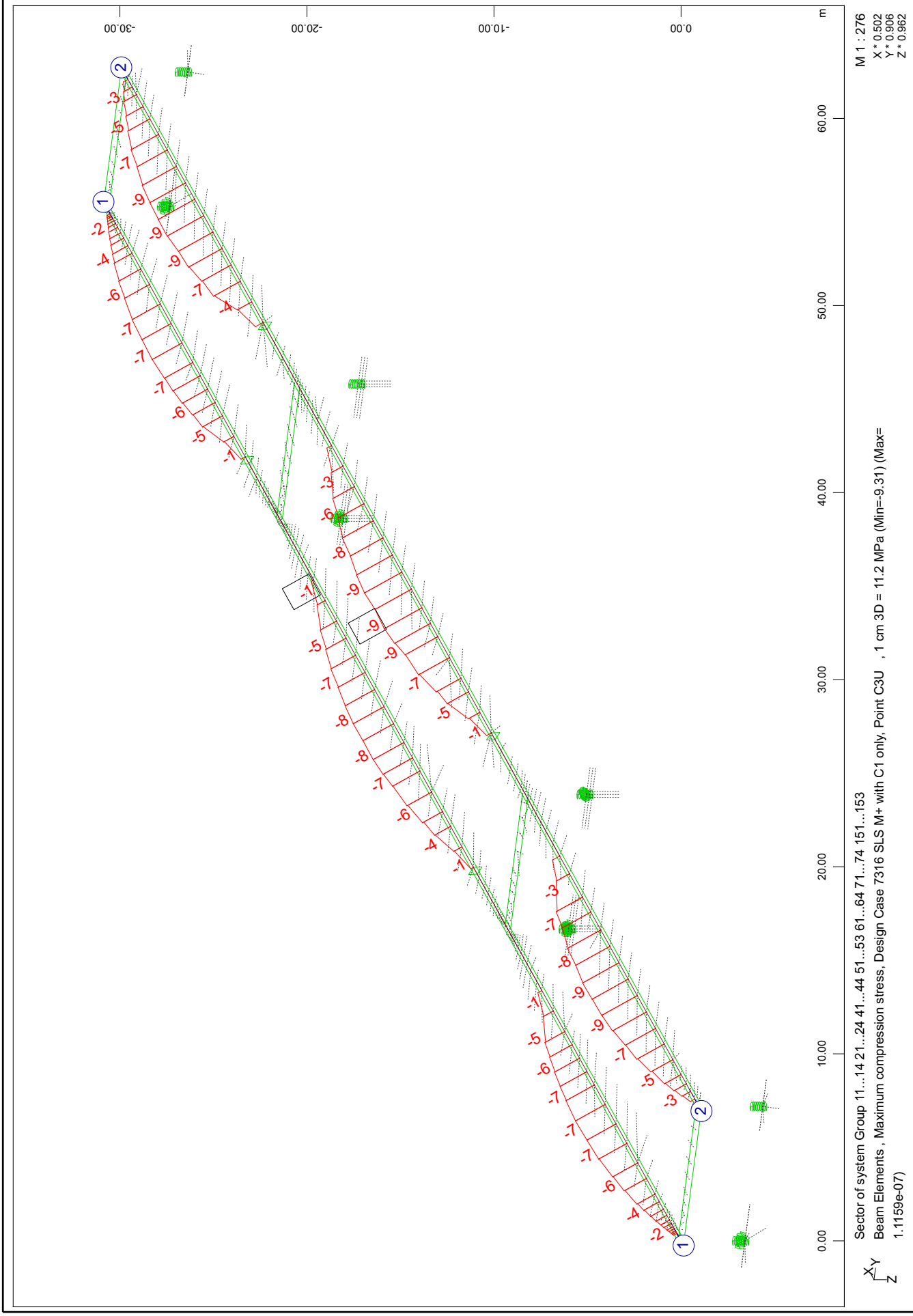

SOFiSTiK AG - www.sofistik.de

Composite bridge 38+50+38, b=14.25m, 2x2HL1100R HISTAR460 , slab 0.30m C30/37
Stresses for SLS combination (t=140days): sum G+C1+Q+F+T

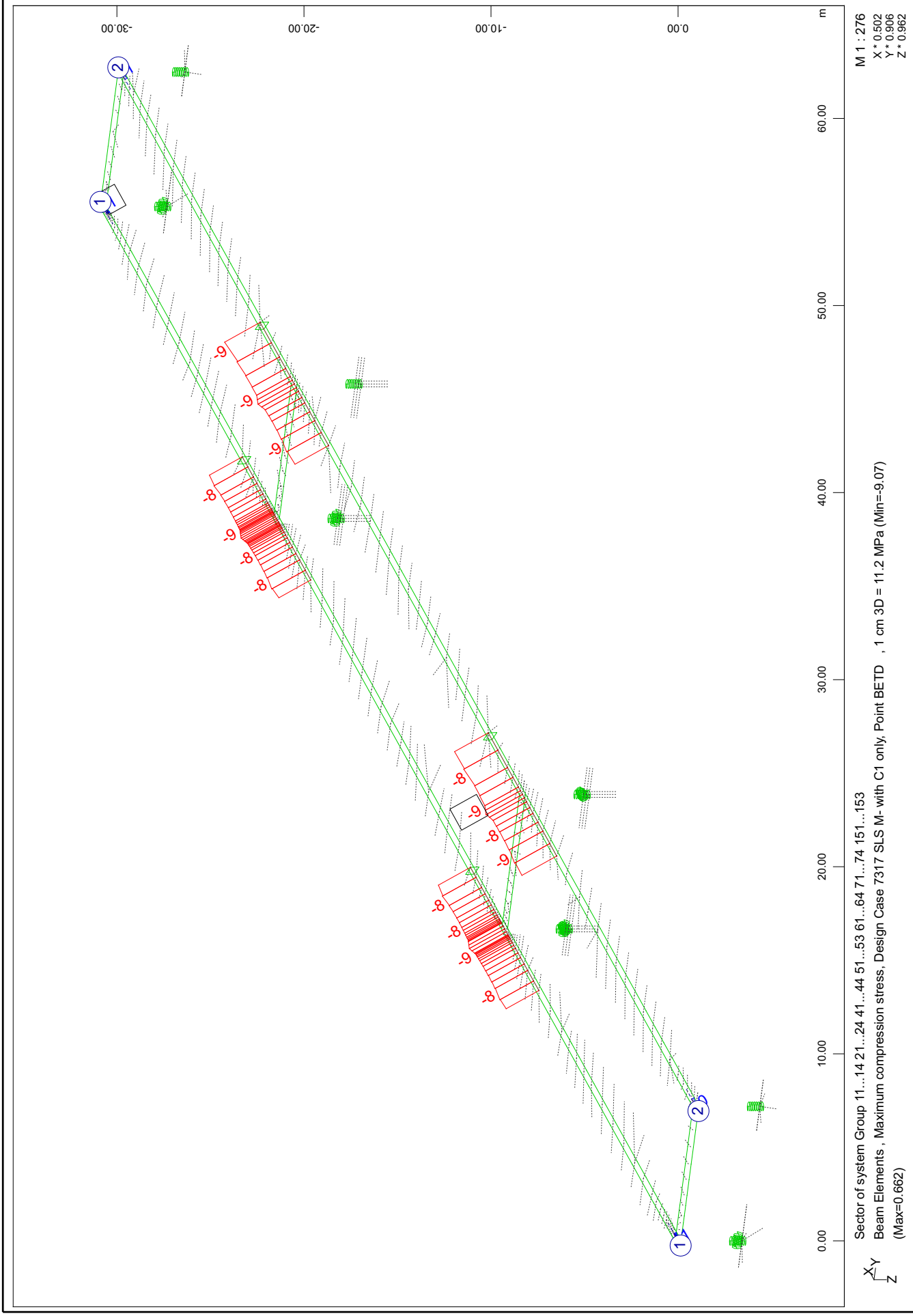

SOFiSTiK AG - www.sofistik.de

Composite bridge 38+50+38, b=14.25m, 2x2HL1100R HISTAR460 , slab 0.30m C30/37
Stresses for SLS combination (t=36140days): sum G+C1+C2+Q+F+T

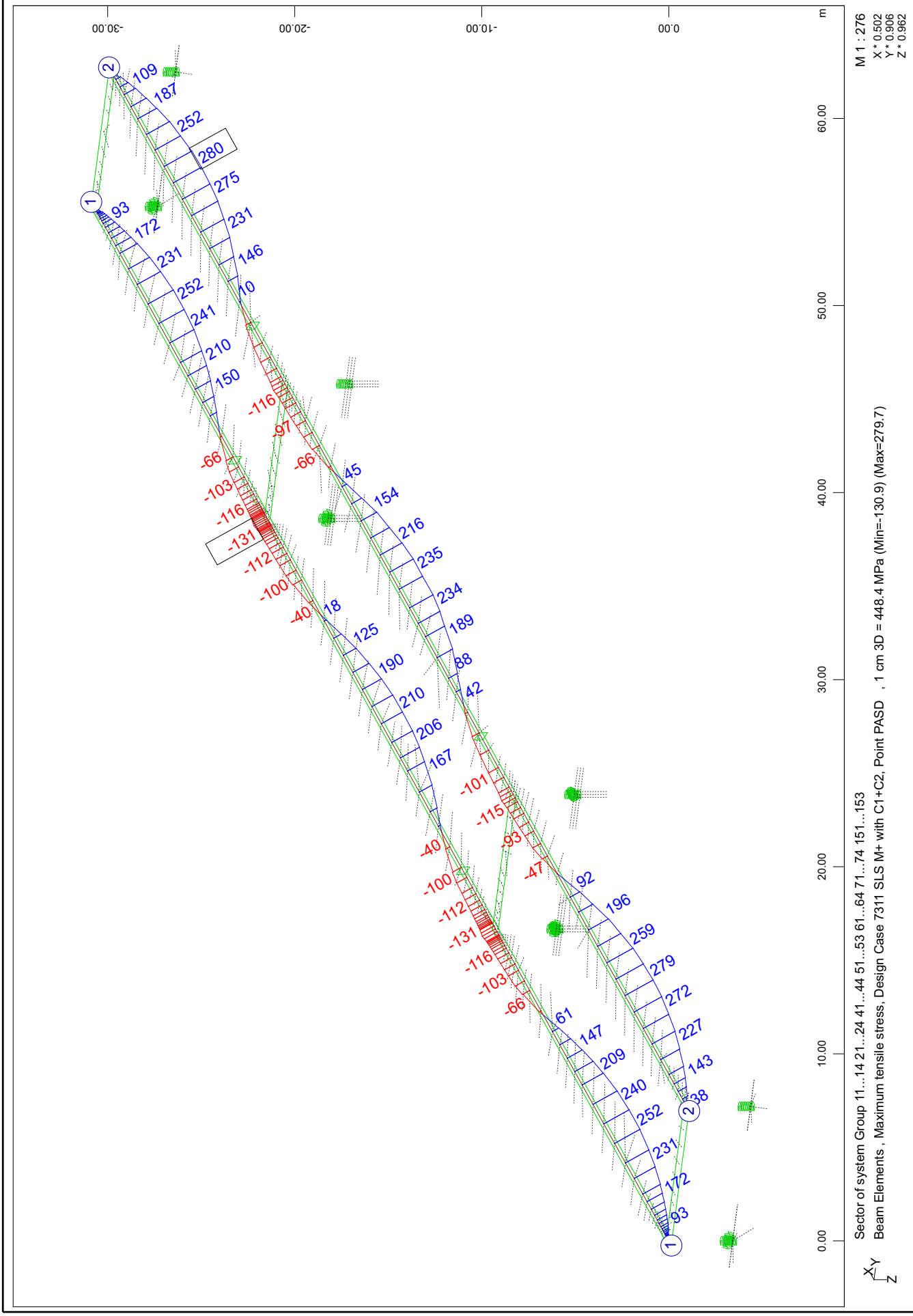

Composite bridge 38+50+38, b=14.25m, 2x2HL1100R HISTAR460 , slab 0.30m C30/37
Stresses for SLS combination (t=36140days): sum G+C1+C2+Q+F+T

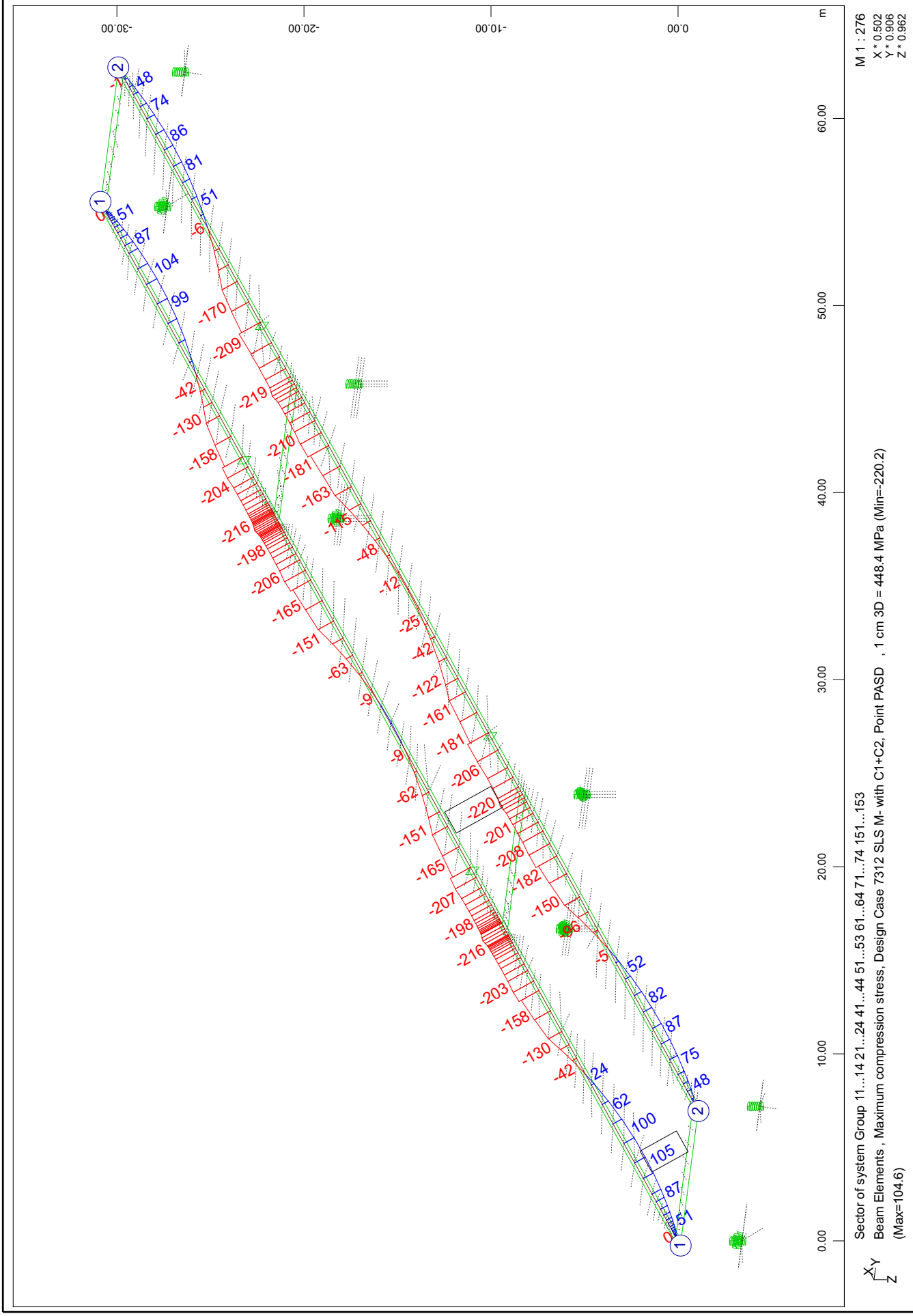

SOFiSTiK AG - www.sofistik.de

Composite bridge 38+50+38, b=14.25m, 2x2HL1100R HISTAR460 , slab 0.30m C30/37
Stresses for SLS combination (t=36140days): sum G+C1+C2+Q+F+T

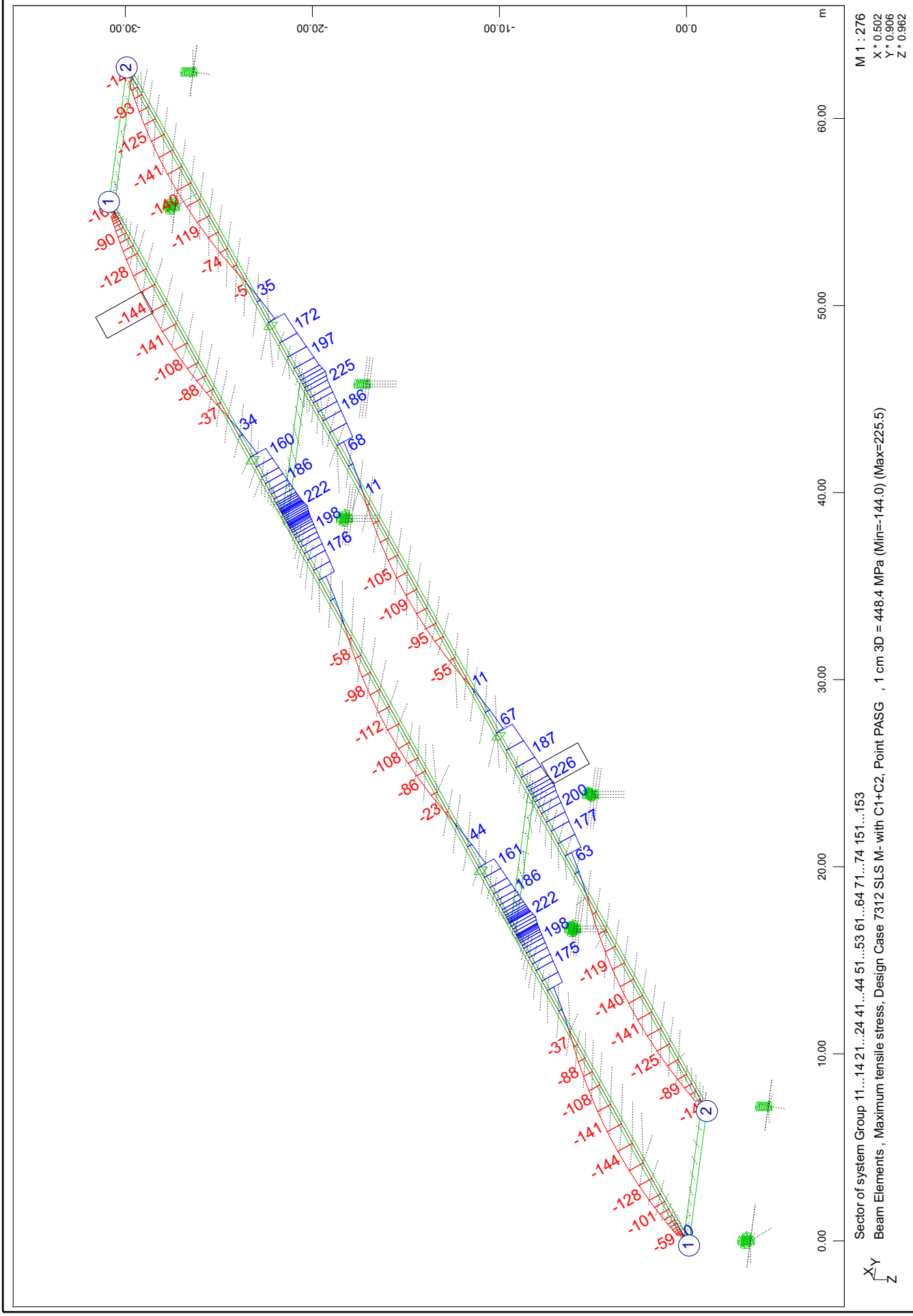

Composite bridge 38+50+38, b=14.25m, 2x2HL1100R HISTAR460 , slab 0.30m C30/37
Stresses for SLS combination (t=36140days): sum G+C1+C2+Q+F+T

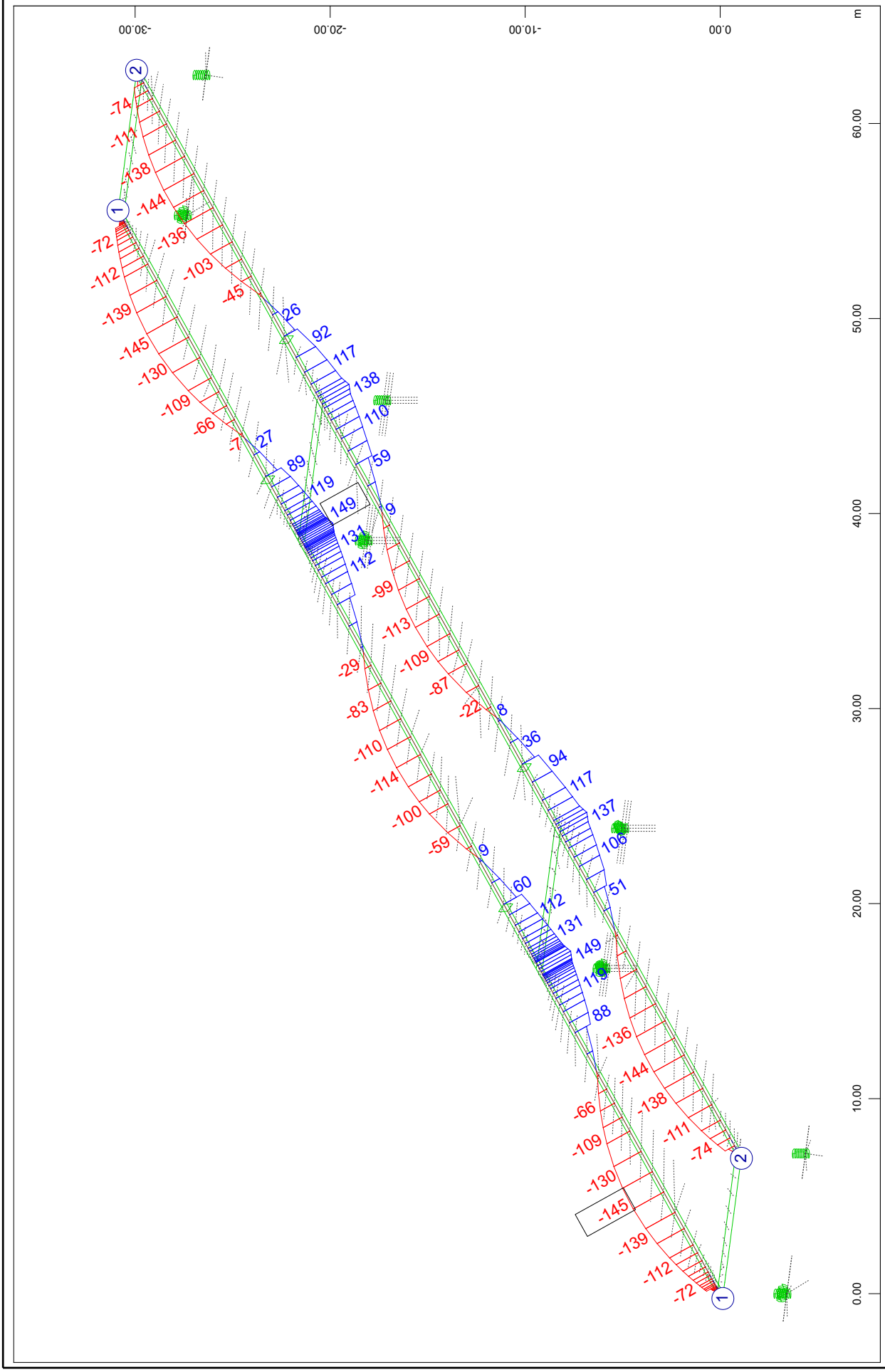

SOFiSTiK AG - www.sofistik.de

Composite bridge 38+50+38, b=14.25m, 2x2HL1100R HISTAR460 , slab 0.30m C30/37
Stresses for SLS combination (t=36140days): sum G+C1+C2+Q+F+T

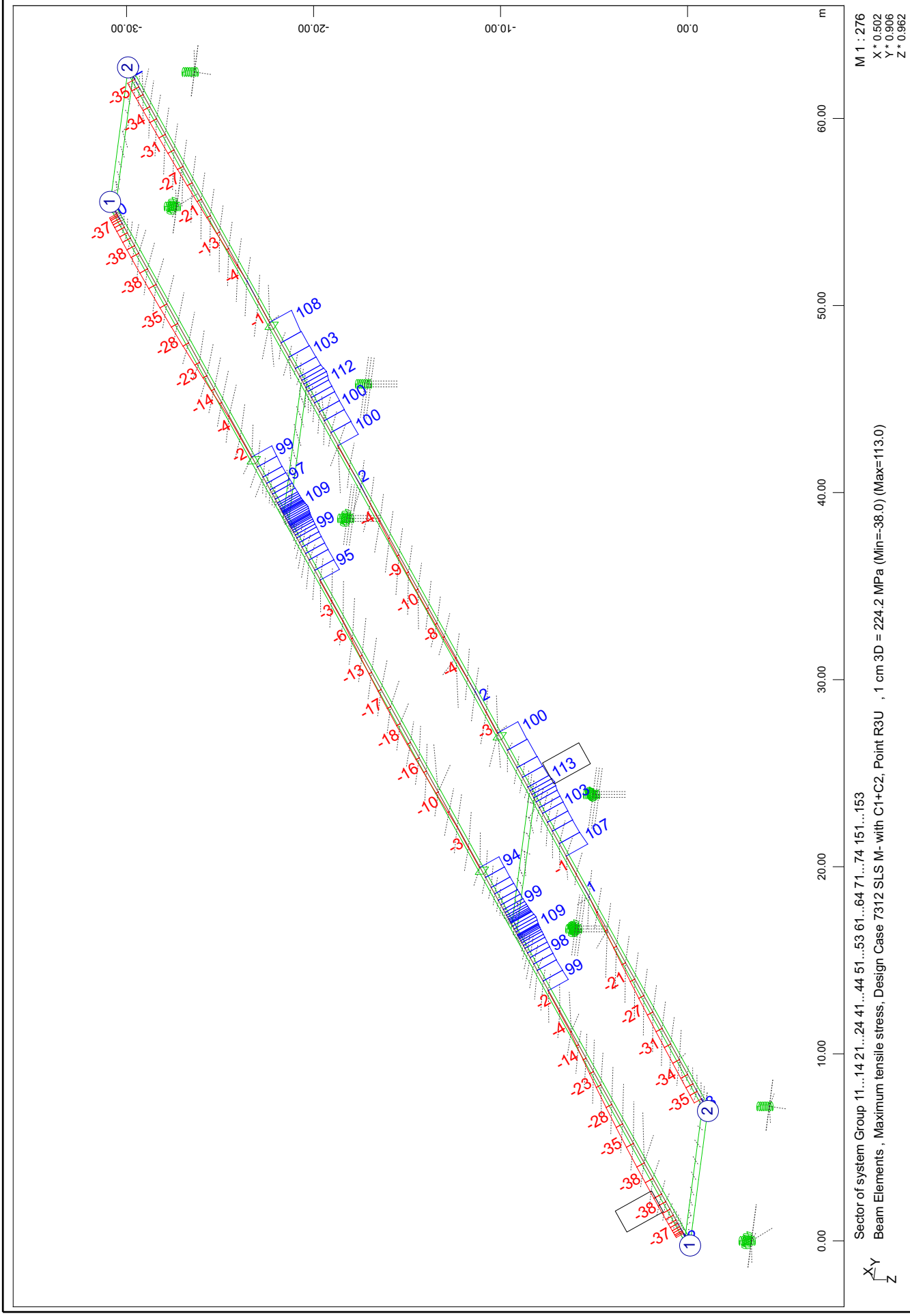

Composite bridge 38+50+38, b=14.25m, 2x2HL1100R HISTAR460 , slab 0.30m C30/37
Stresses for SLS combination (t=36140days): sum G+C1+C2+Q+F+T

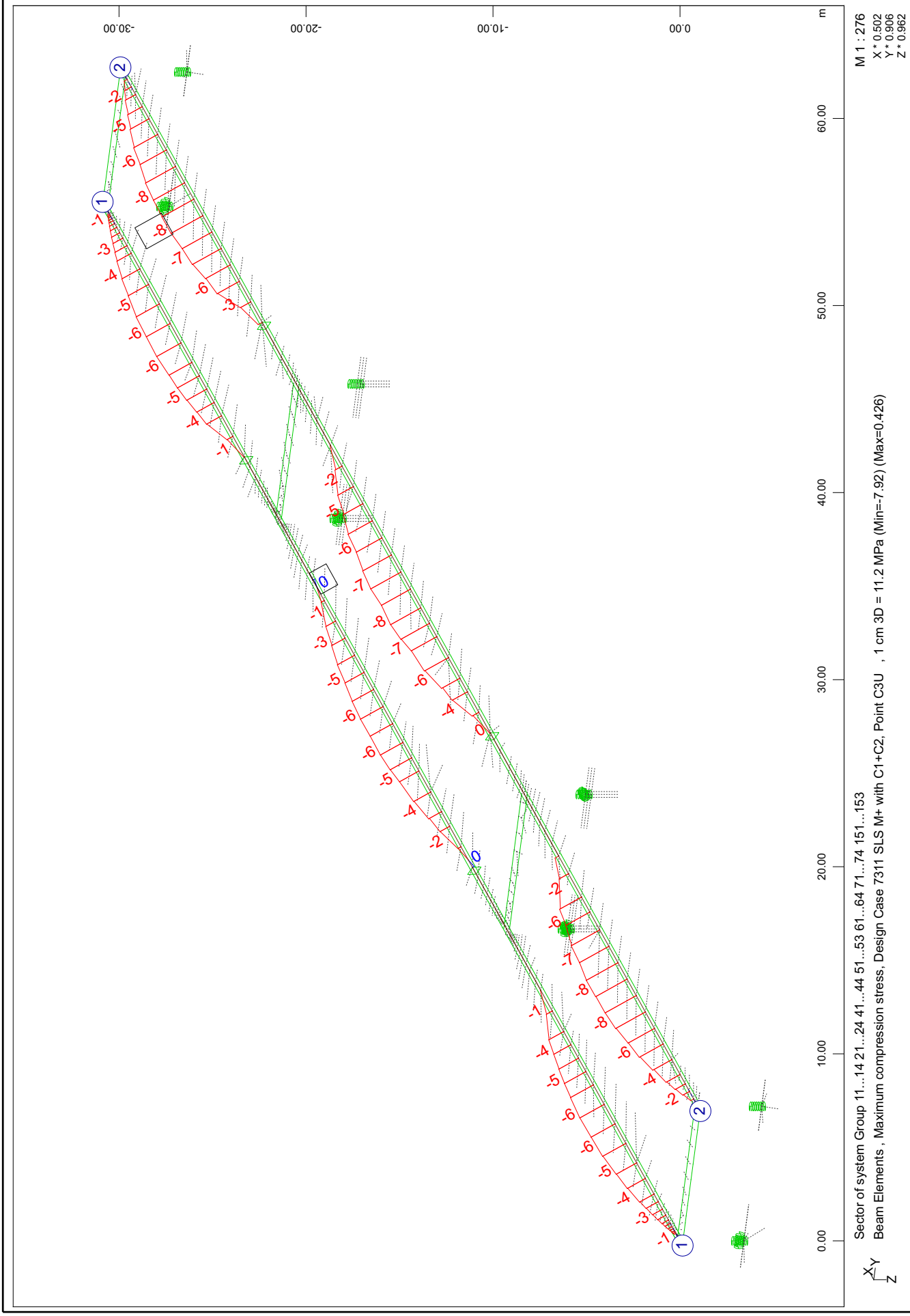

SOFiSTiK AG - www.sofistik.de

Composite bridge 38+50+38, b=14.25m, 2x2HL1100R HISTAR460 , slab 0.30m C30/37
Stresses for SLS combination (t=36140days): sum G+C1+C2+Q+F+T

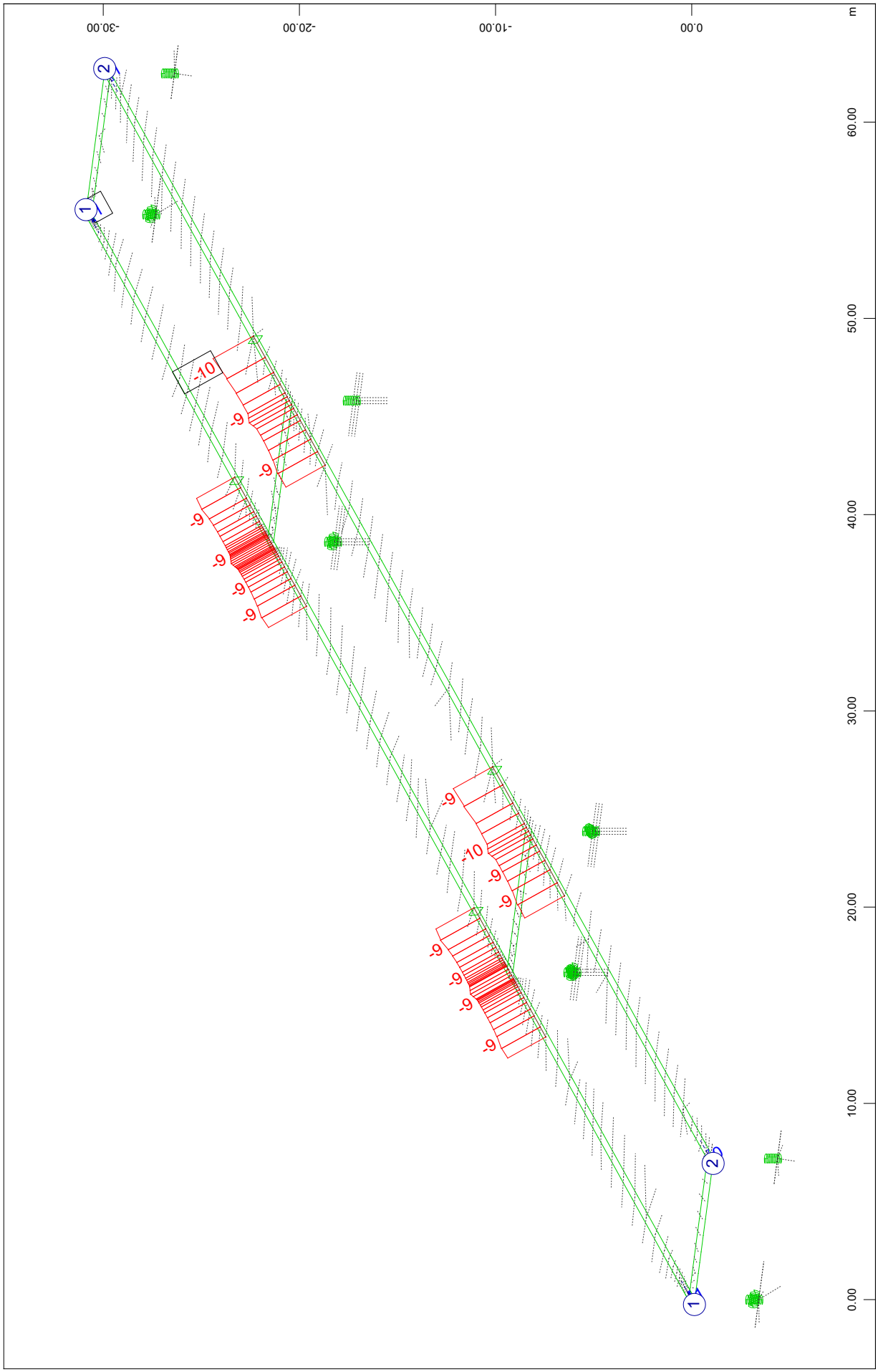

SOFiSTiK AG - www.sofistik.de

Composite bridge 38+50+38, b=14.25m, 2x2HL1100R HISTAR460 , slab 0.30m C30/37
Stresses for ULS design combination (t=140days): sum G+C1+Q+F+T

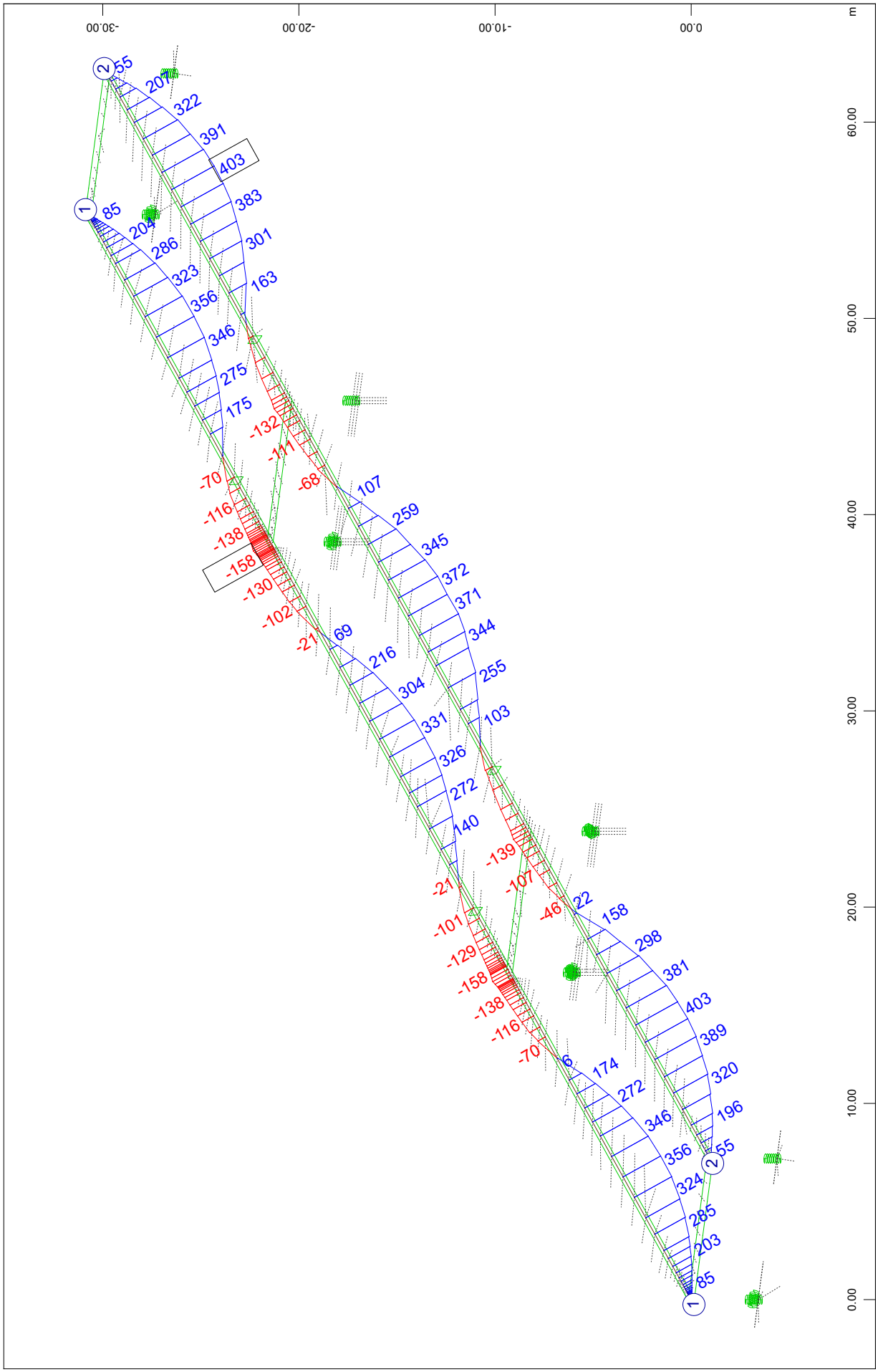

SOFiSTiK AG - www.sofistik.de

Composite bridge 38+50+38, b=14.25m, 2x2HL1100R HISTAR460 , slab 0.30m C30/37
Stresses for ULS design combination (t=140days): sum G+C1+Q+F+T

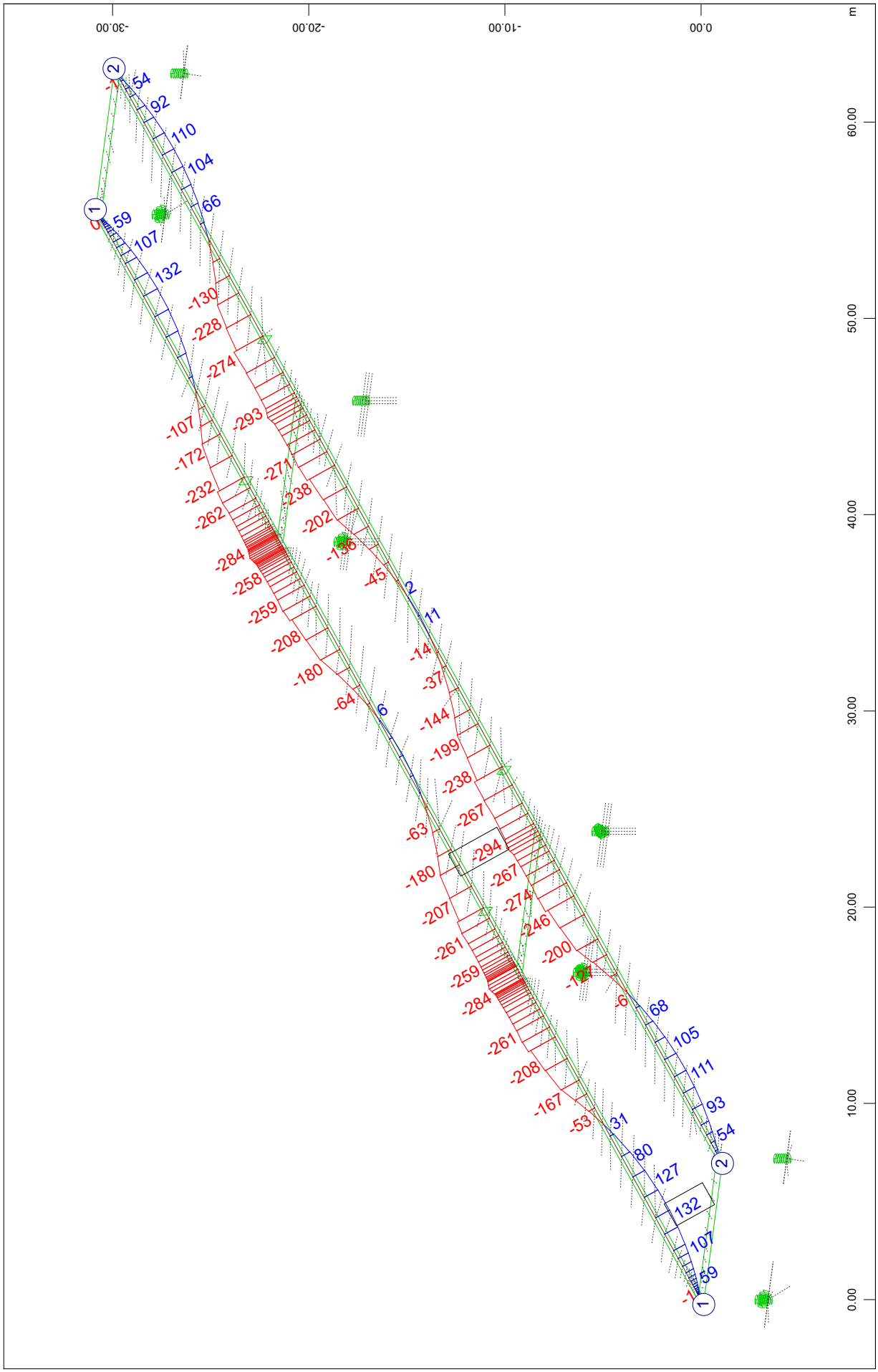

Composite bridge 38+50+38, b=14.25m, 2x2HL1100R HISTAR460 , slab 0.30m C30/37
Stresses for ULS design combination (t=140days): sum G+C1+Q+F+T

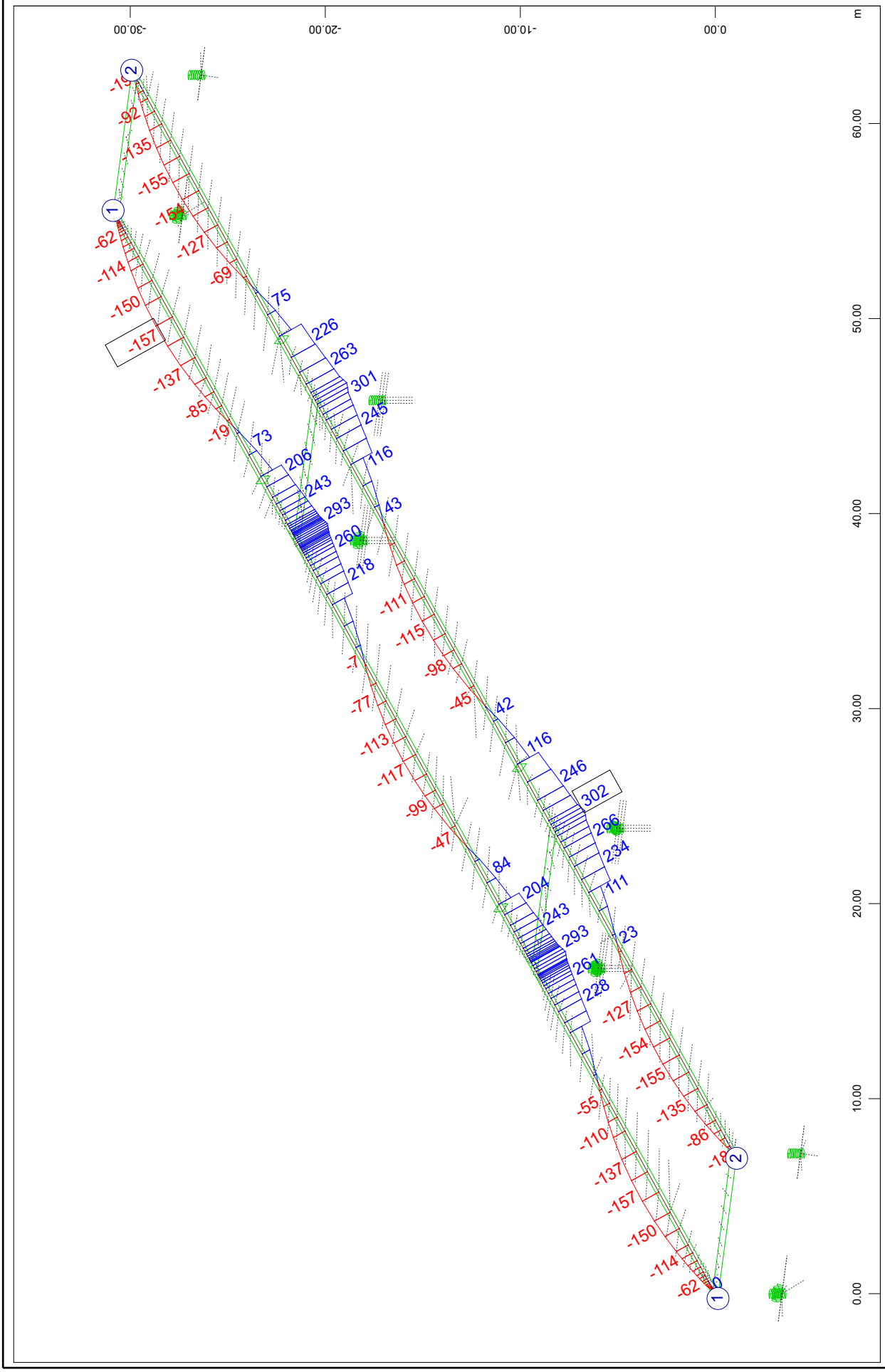

SOFiSTiK AG - www.sofistik.de

Composite bridge 38+50+38, b=14.25m, 2x2HL1100R HISTAR460 , slab 0.30m C30/37
Stresses for ULS design combination (t=140days): sum G+C1+Q+F+T

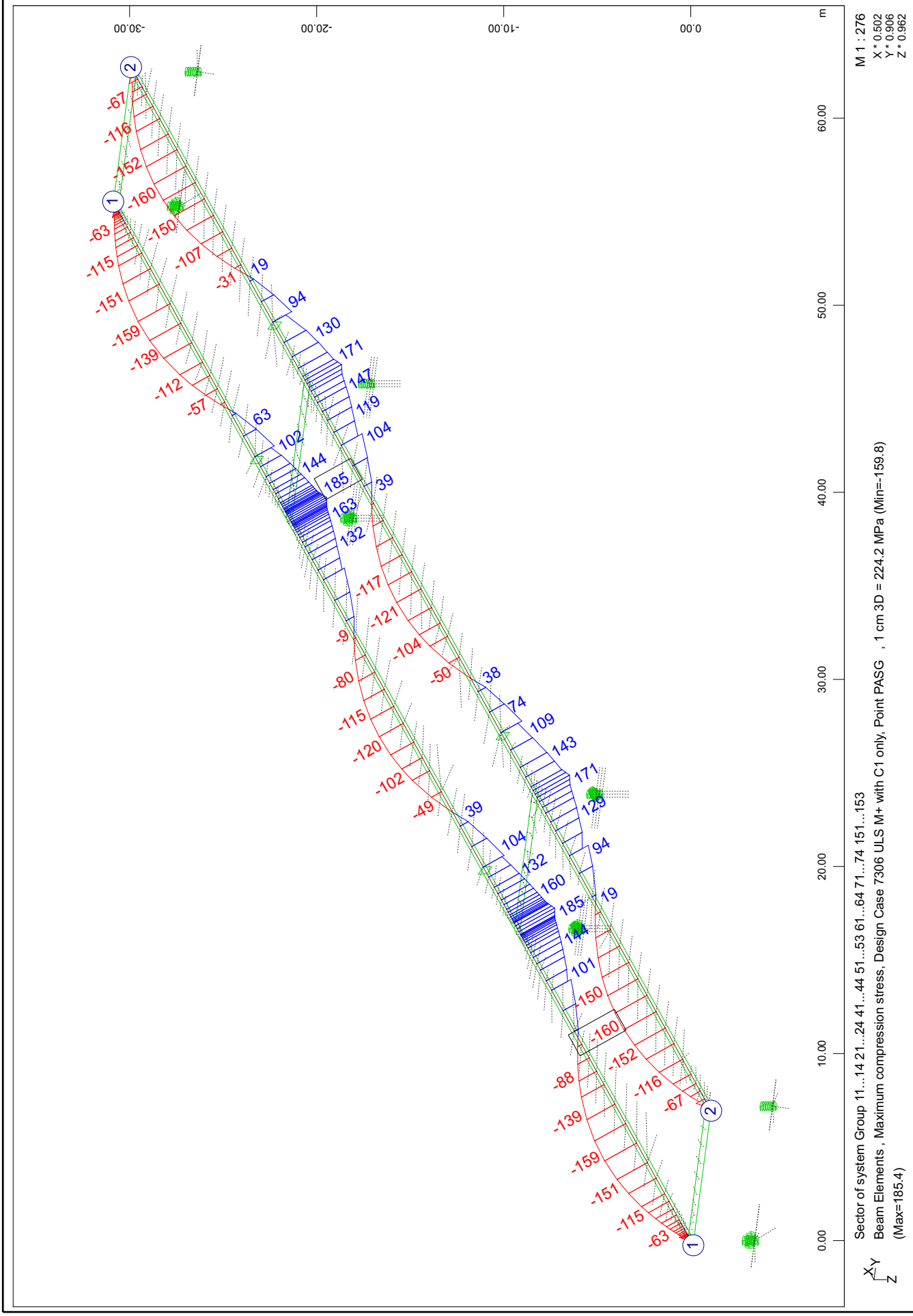

SOFiSTiK AG - www.sofistik.de

Composite bridge 38+50+38, b=14.25m, 2x2HL1100R HISTAR460 , slab 0.30m C30/37
Stresses for ULS design combination (t=140days): sum G+C1+Q+F+T

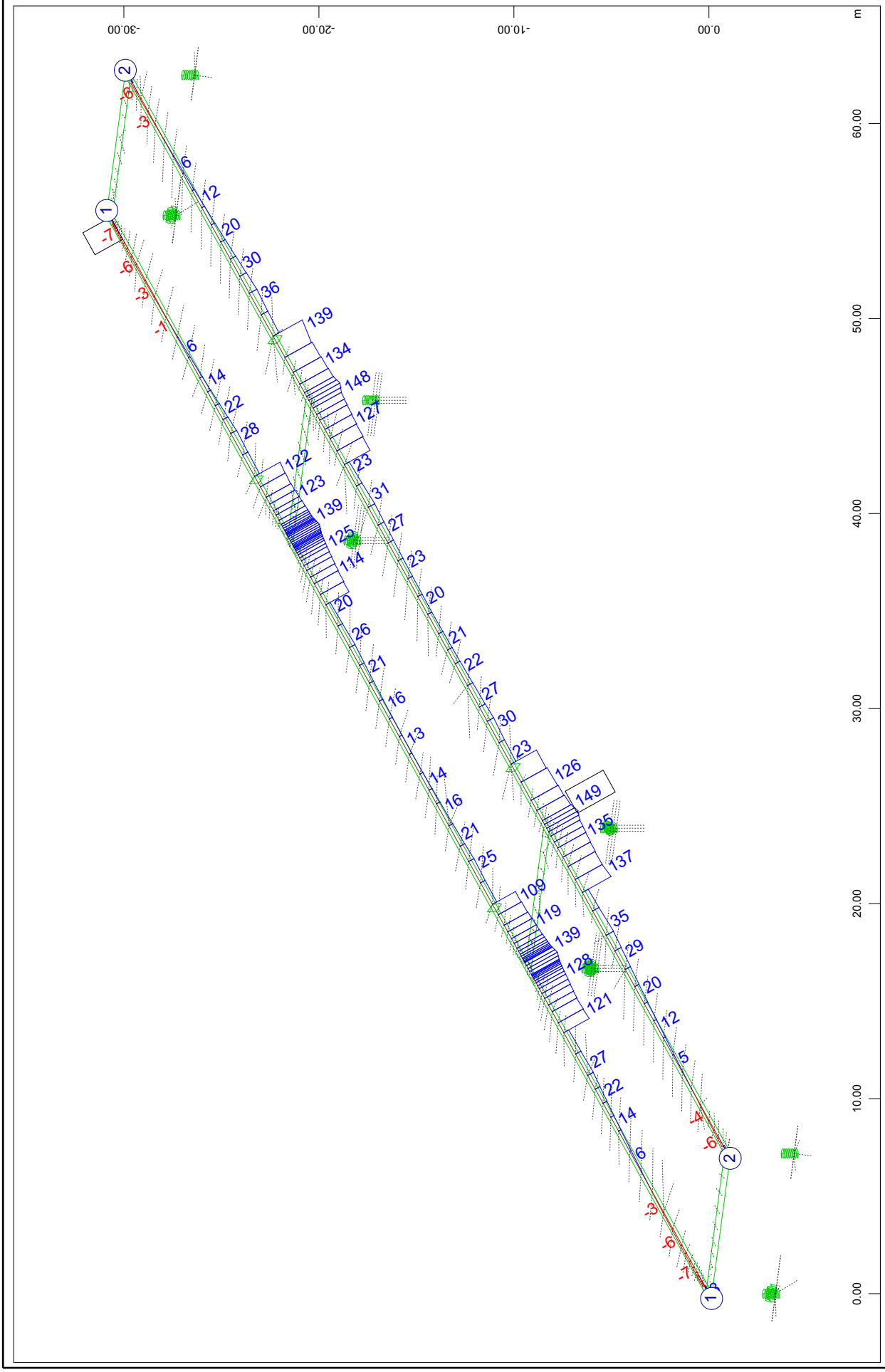

Composite bridge 38+50+38, b=14.25m, 2x2HL1100R HISTAR460 , slab 0.30m C30/37
Stresses for ULS design combination (t=140days): sum G+C1+Q+F+T

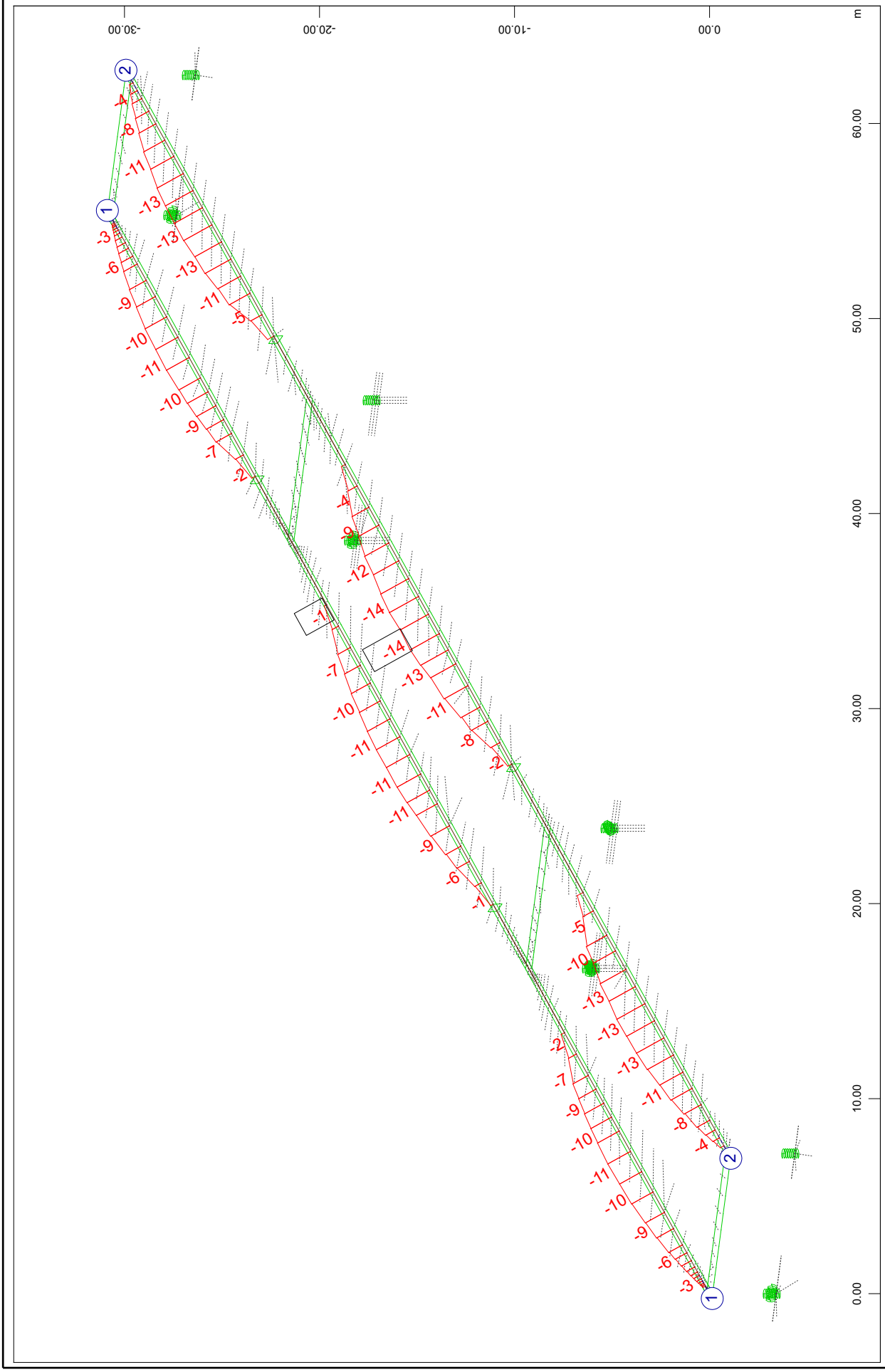

SOFiSTiK AG - www.sofistik.de

Composite bridge 38+50+38, b=14.25m, 2x2HL1100R HISTAR460 , slab 0.30m C30/37
Stresses for ULS design combination (t=140days): sum G+C1+Q+F+T

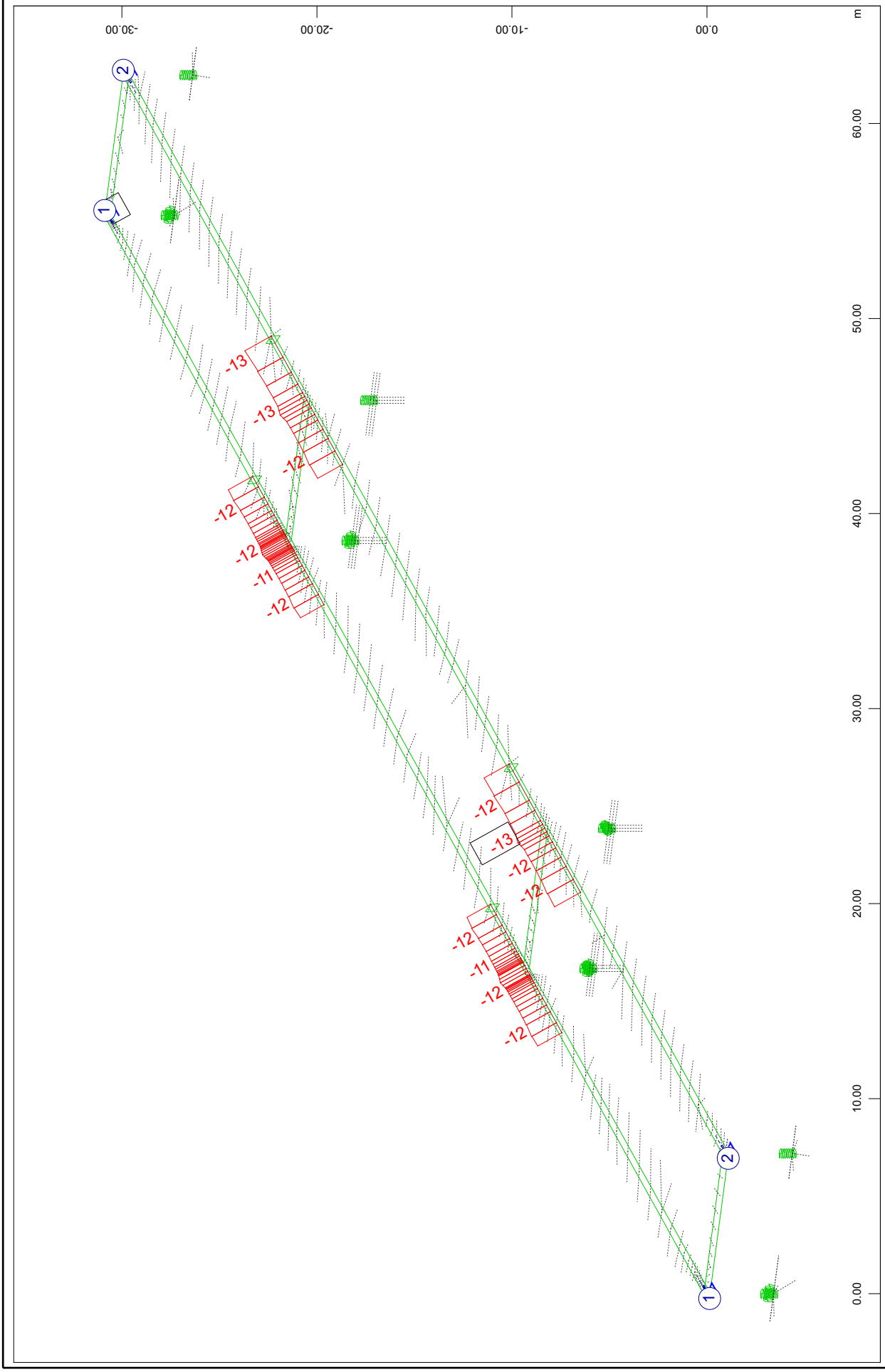

SOFiSTiK AG - www.sofistik.de

Composite bridge 38+50+38, b=14.25m, 2x2HL1100R HISTAR460 , slab 0.30m C30/37
Stresses for ULS design combination (t=36140days): sum G+C1+C2+Q+F+T

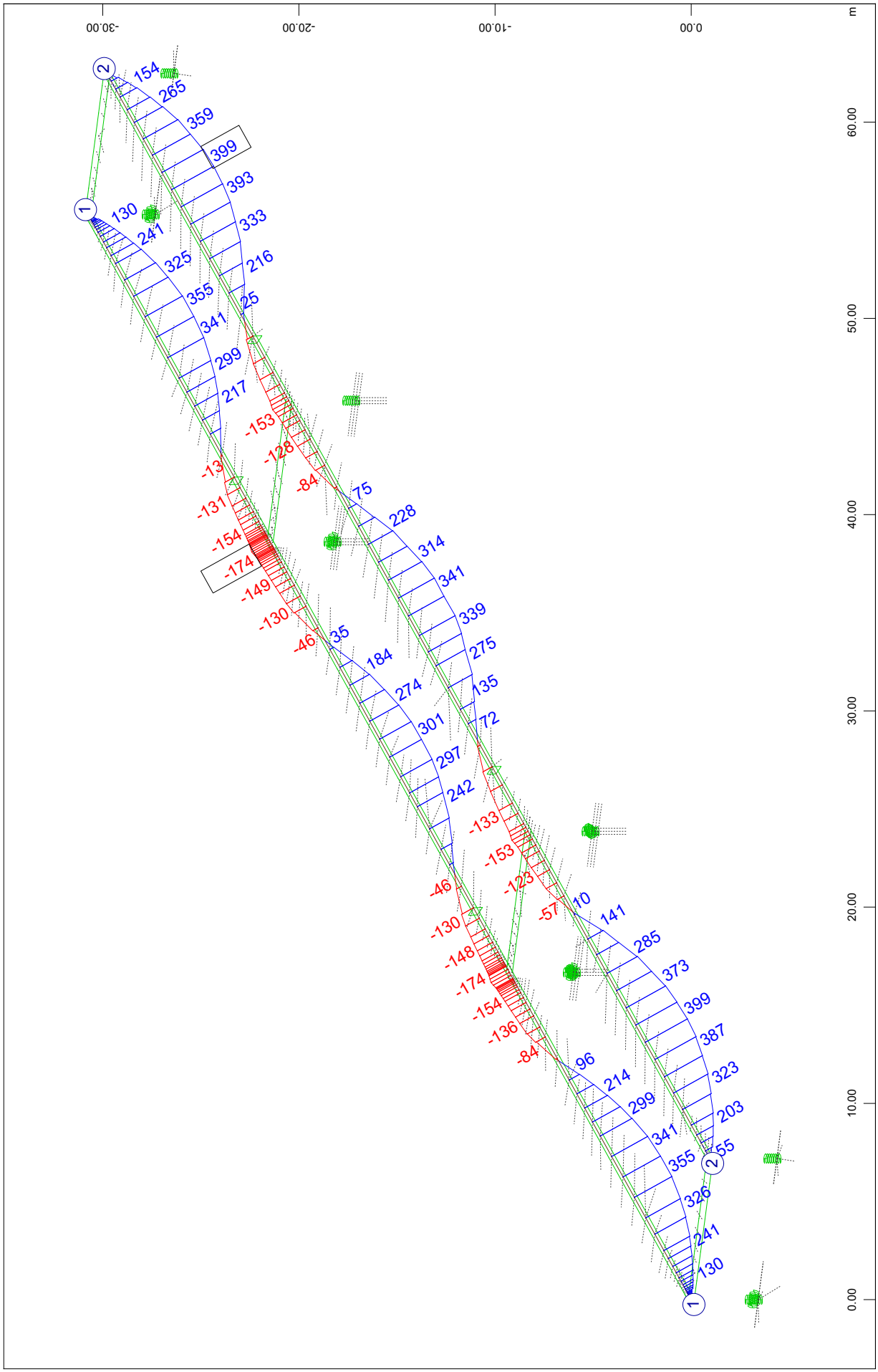

SOFiSTiK AG - www.sofistik.de

Composite bridge 38+50+38, b=14.25m, 2x2HL1100R HISTAR460 , slab 0.30m C30/37
Stresses for ULS design combination (t=36140days): sum G+C1+C2+Q+F+T

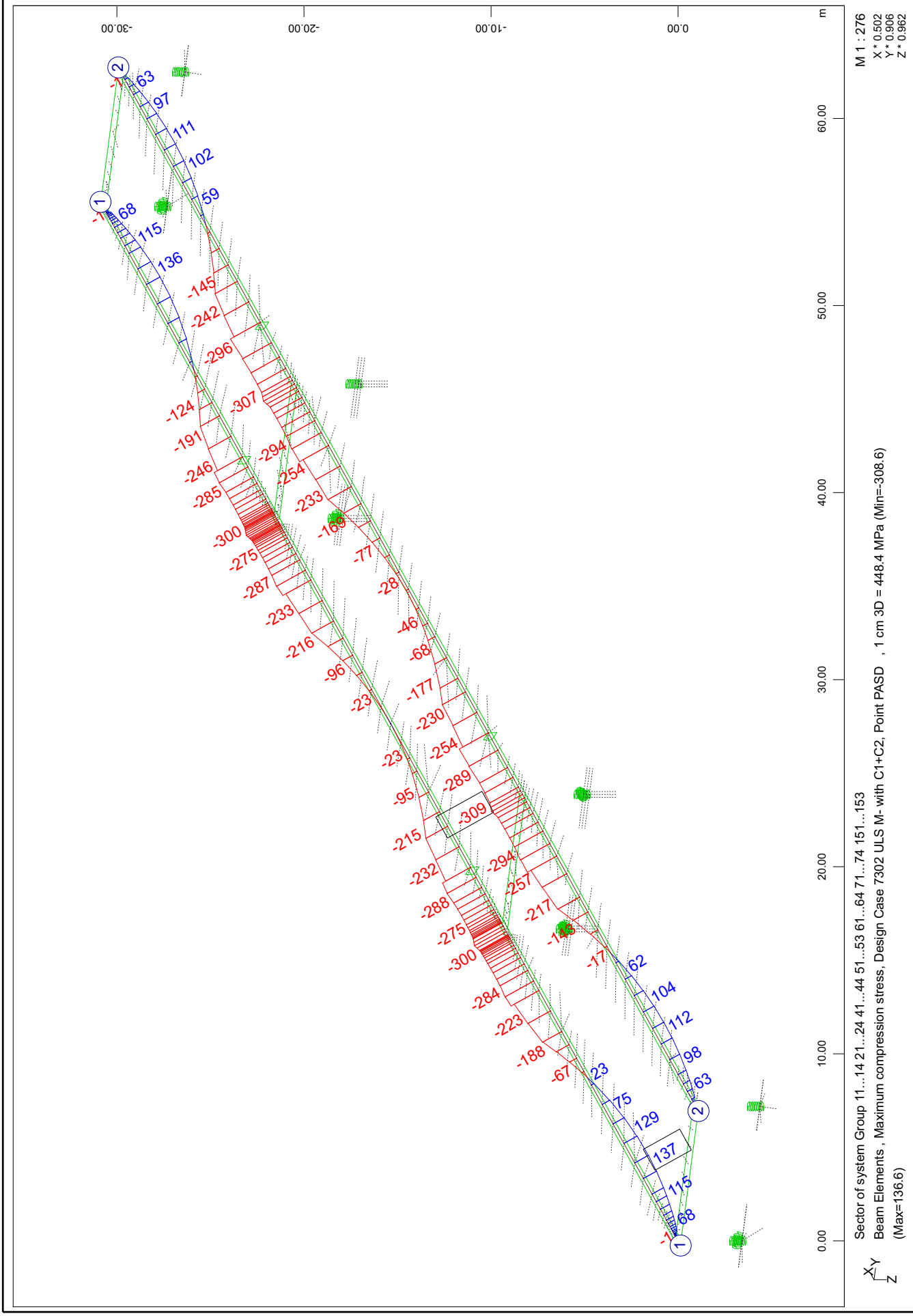

SOFiSTiK AG - www.sofistik.de

Composite bridge 38+50+38, b=14.25m, 2x2HL1100R HISTAR460 , slab 0.30m C30/37
Stresses for ULS design combination (t=36140days): sum G+C1+C2+Q+F+T

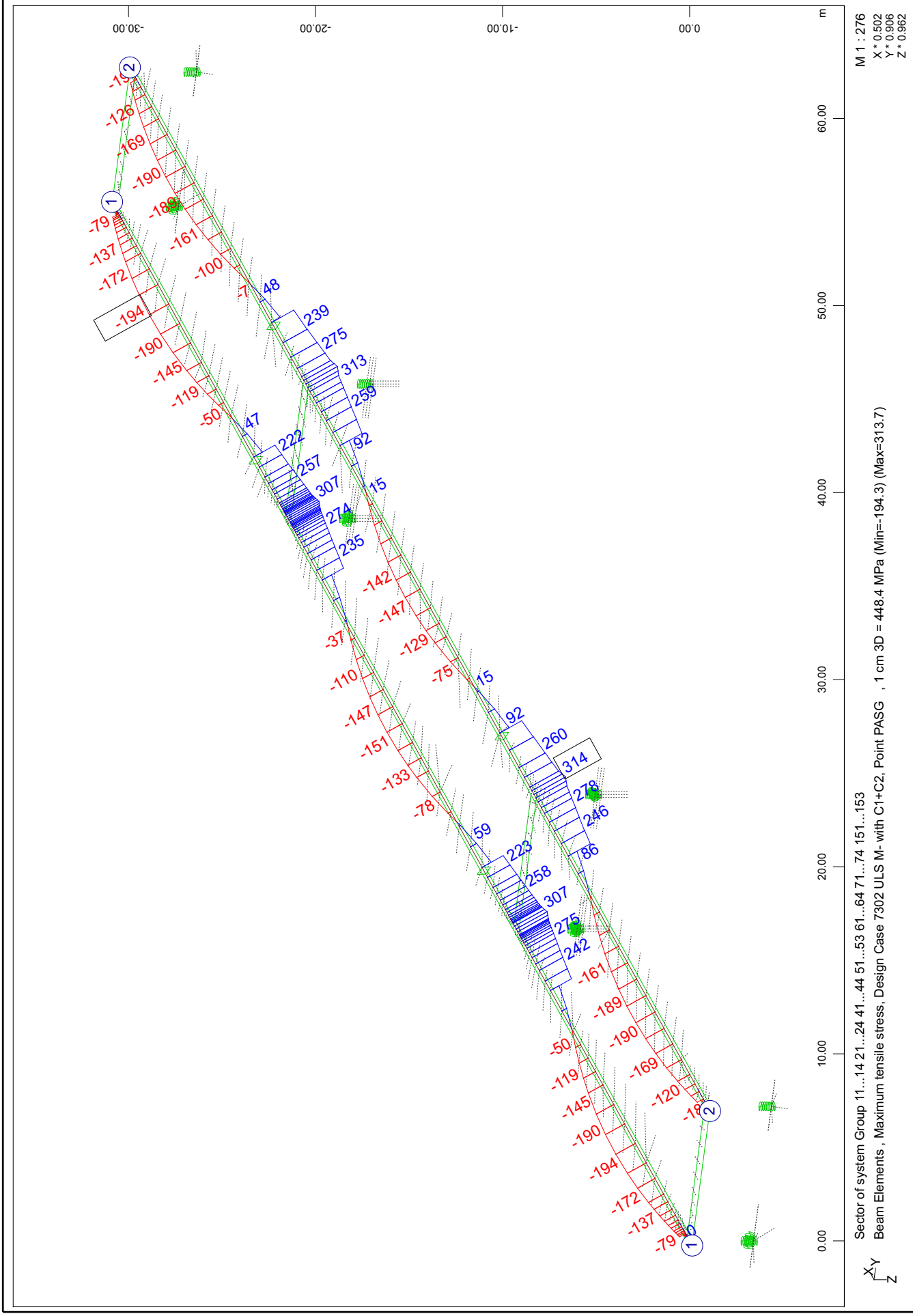

Composite bridge 38+50+38, b=14.25m, 2x2HL1100R HISTAR460 , slab 0.30m C30/37
Stresses for ULS design combination (t=36140days): sum G+C1+C2+Q+F+T

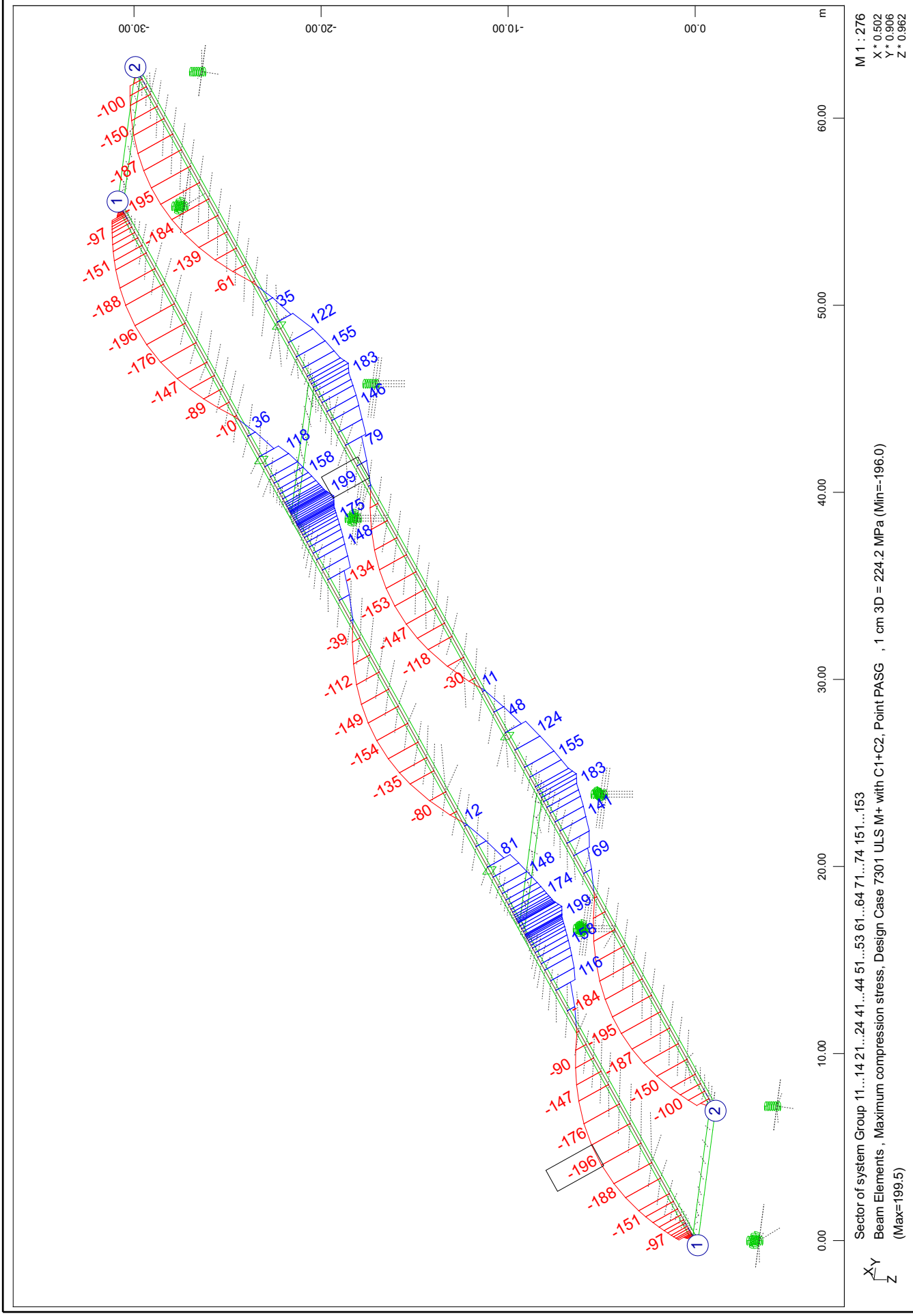

SOFiSTiK AG - www.sofistik.de

Composite bridge 38+50+38, b=14.25m, 2x2HL1100R HISTAR460 , slab 0.30m C30/37
Stresses for ULS design combination (t=36140days): sum G+C1+C2+Q+F+T

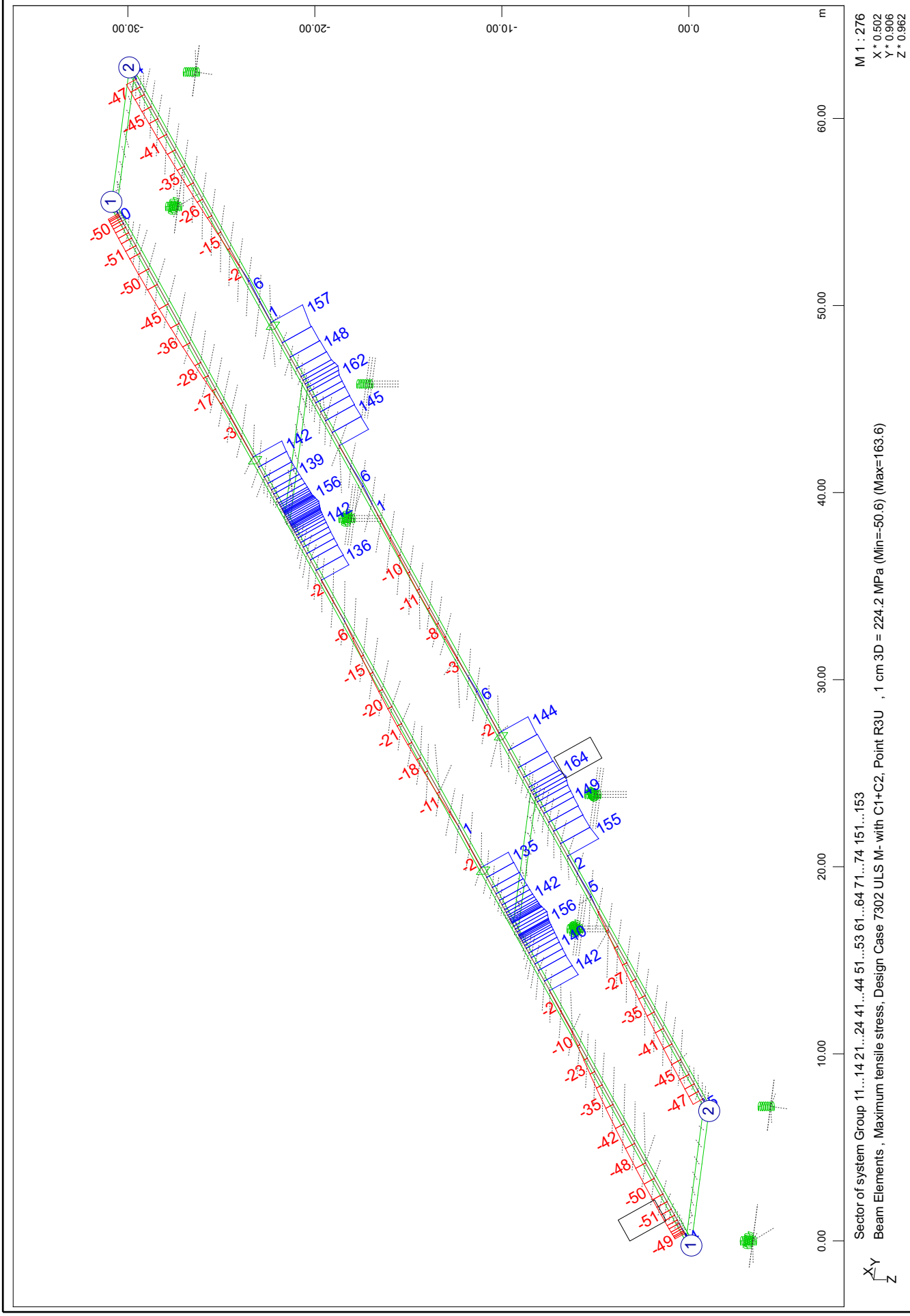

Composite bridge 38+50+38, b=14.25m, 2x2HL1100R HISTAR460 , slab 0.30m C30/37
Stresses for ULS design combination (t=36140days): sum G+C1+C2+Q+F+T

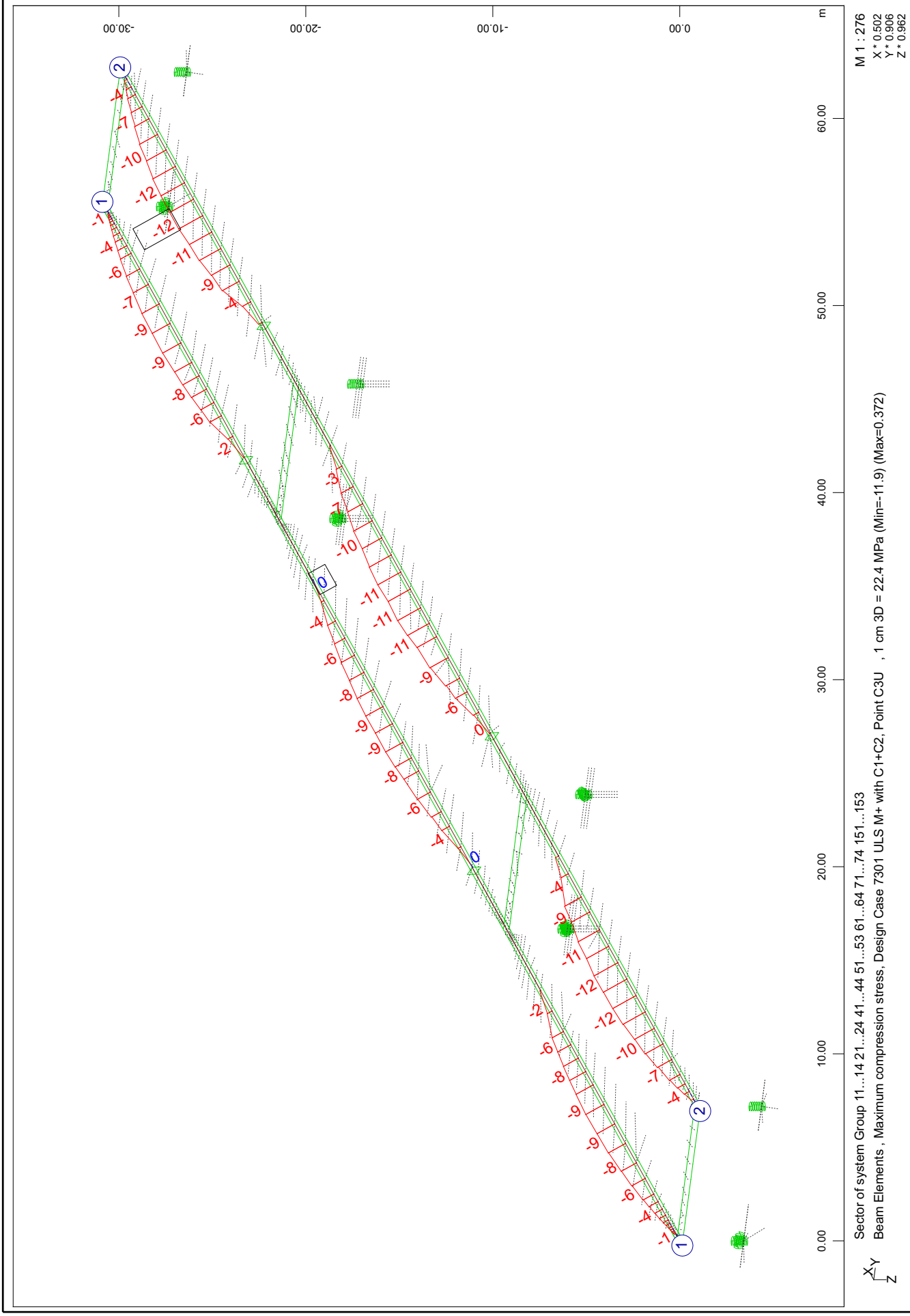

SOFiSTiK AG - www.sofistik.de

Composite bridge 38+50+38, b=14.25m, 2x2HL1100R HISTAR460 , slab 0.30m C30/37
Stresses for ULS design combination (t=36140days): sum G+C1+C2+Q+F+T

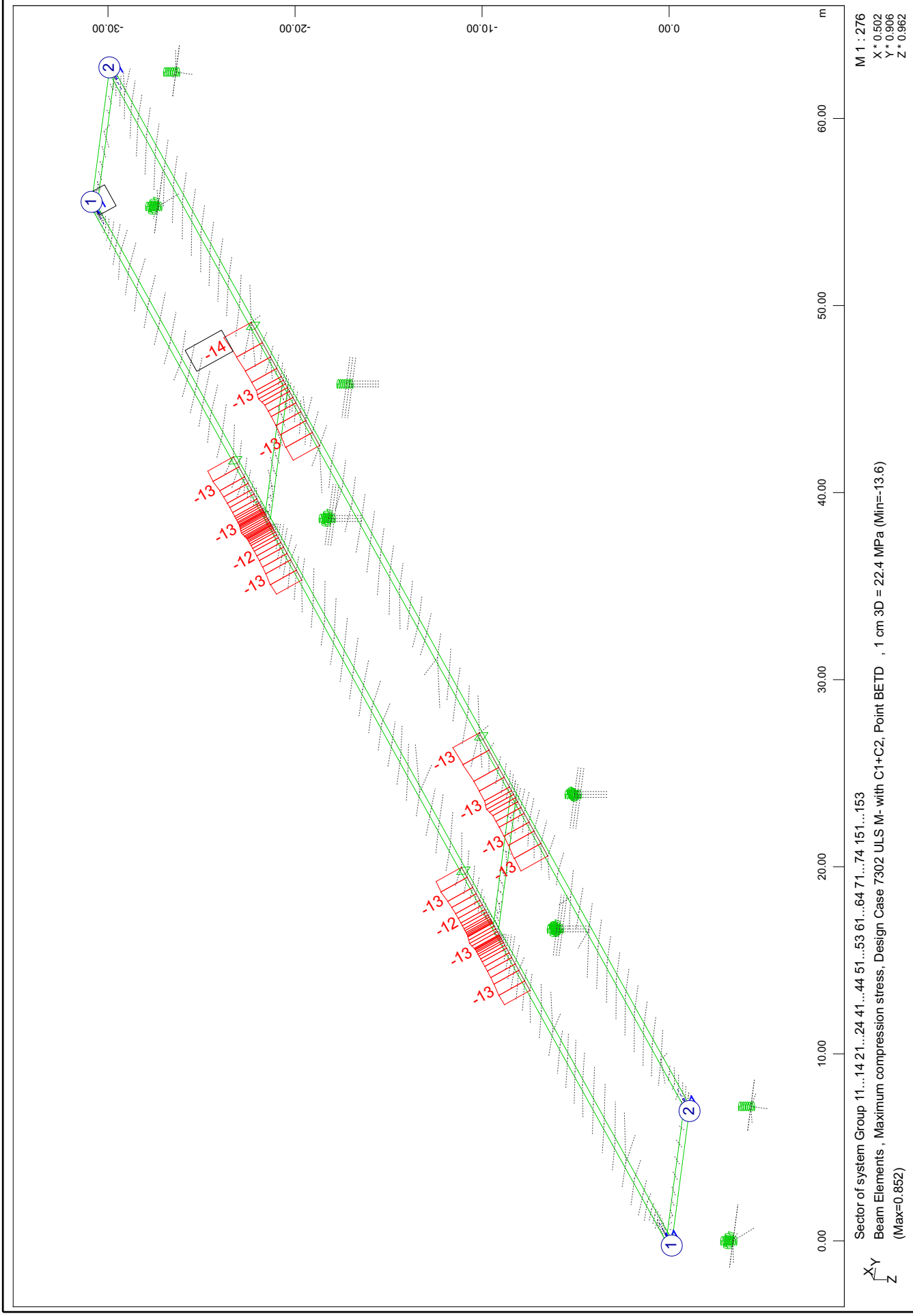

SOFiSTiK AG - www.sofistik.de

Composite bridge 38+50+38, b=14.25m, 2x2HL1100R HISTAR460 , slab 0.30m C30/37
Results for SLS characteristic combinations of loads: sum G+C+Q+F+T

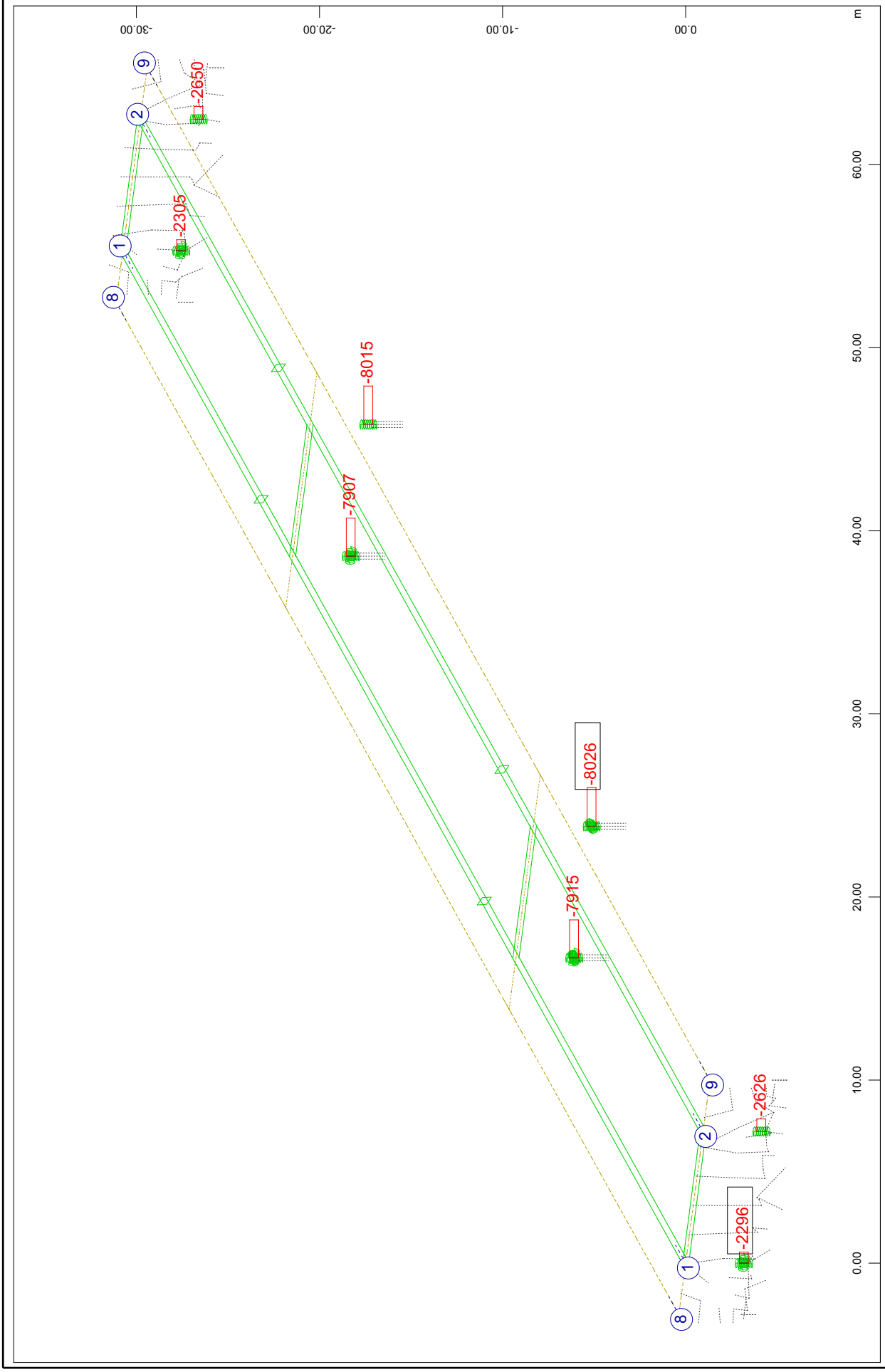

SOFiSTiK AG - www.sofistik.de

Composite bridge 38+50+38, b=14.25m, 2x2HL1100R HISTAR460 , slab 0.30m C30/37
Results for SLS characteristic combinations of loads: sum G+C+Q+F+T

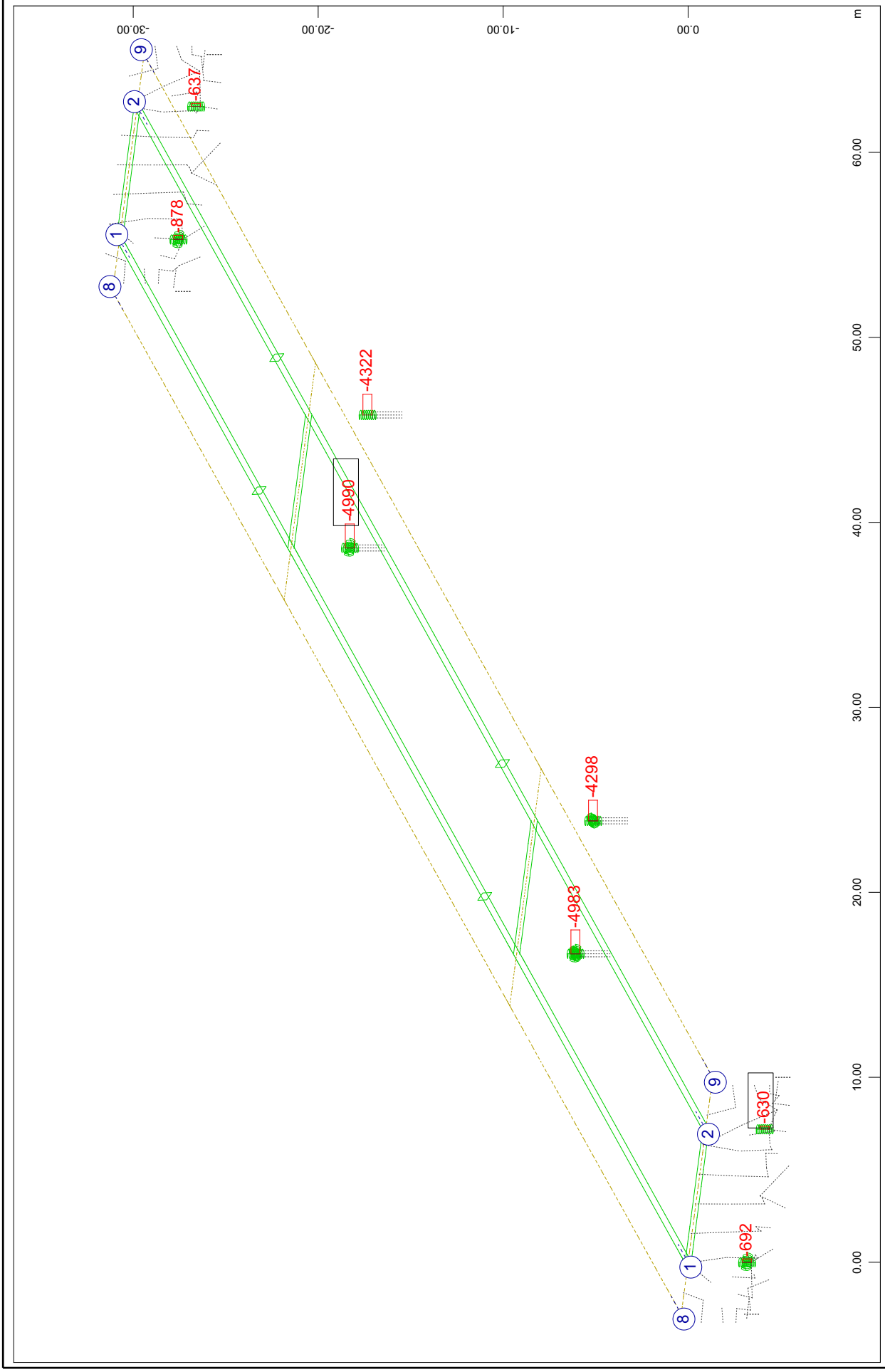

SOFiSTiK AG - www.sofistik.de

Composite bridge 38+50+38, b=14.25m, 2x2HL1100R HISTAR460 , slab 0.30m C30/37
Results for SLS characteristic combinations of loads: sum G+C+Q+F+T

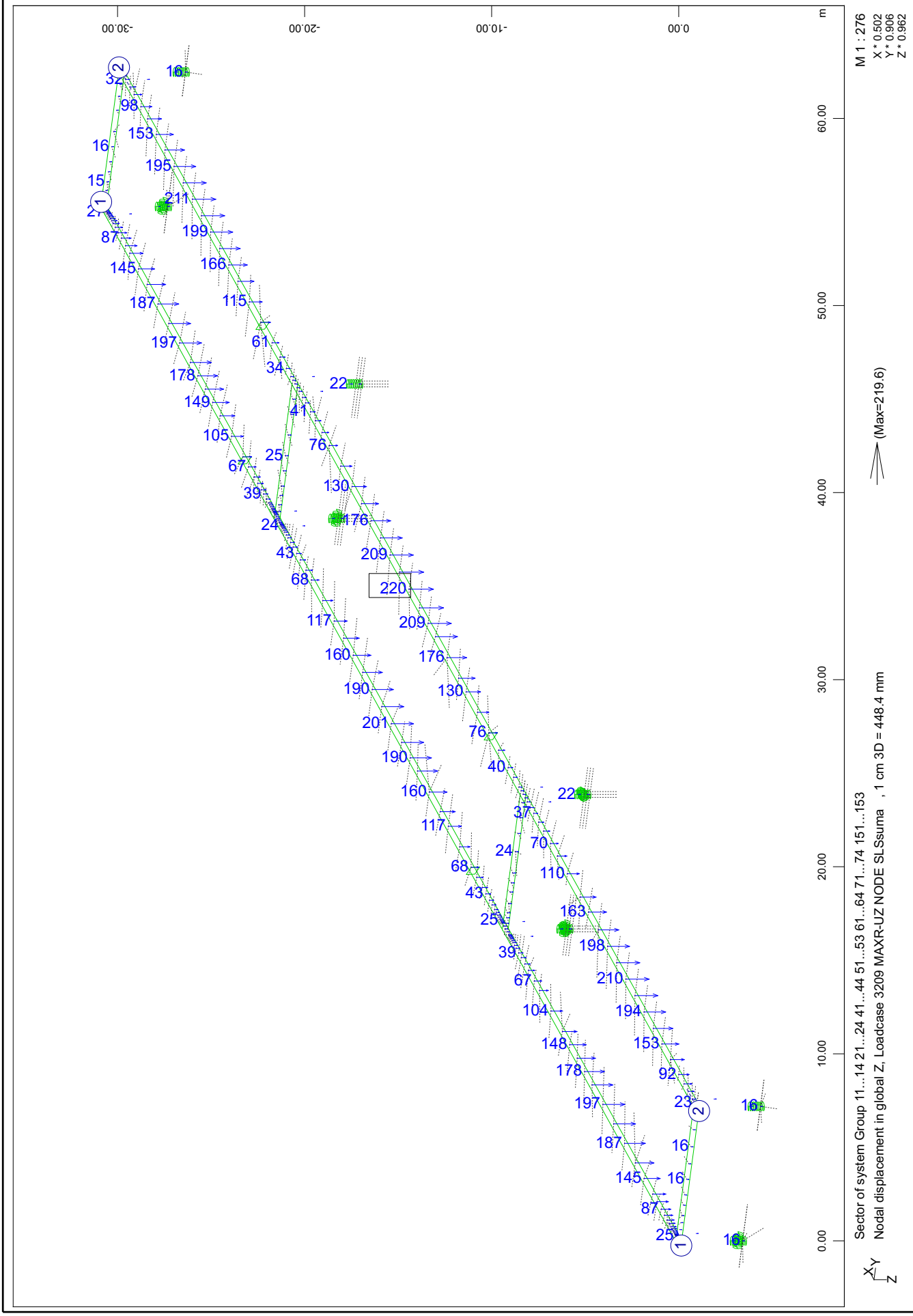

Composite bridge 38+50+38, b=14.25m, 2x2HL1100R HISTAR460 , slab 0.30m C30/37
Results for SLS characteristic combinations of loads: sum G+C+Q+F+T

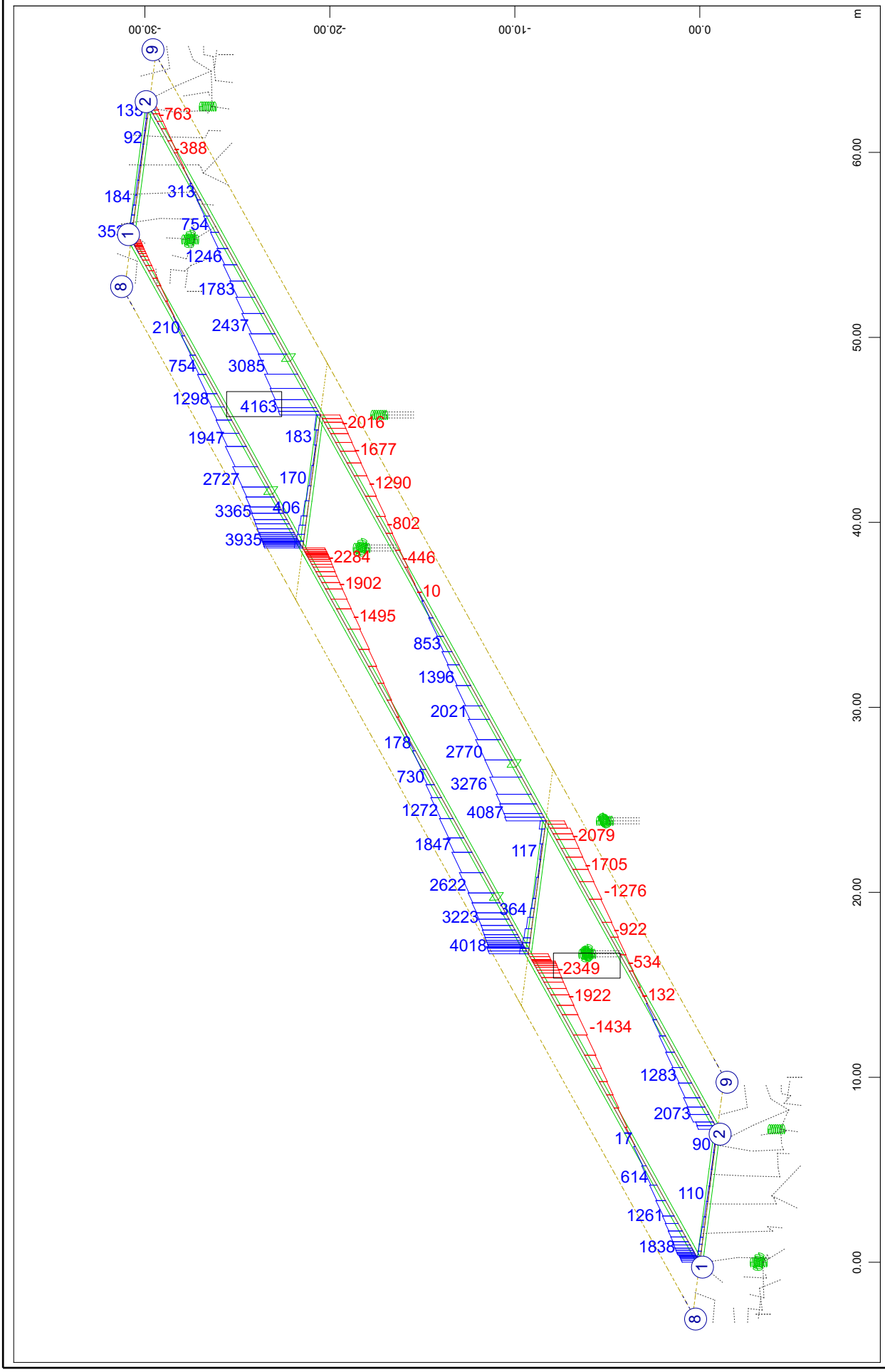

Composite bridge 38+50+38, b=14.25m, 2x2HL1100R HISTAR460 , slab 0.30m C30/37
Results for SLS characteristic combinations of loads: sum G+C+Q+F+T

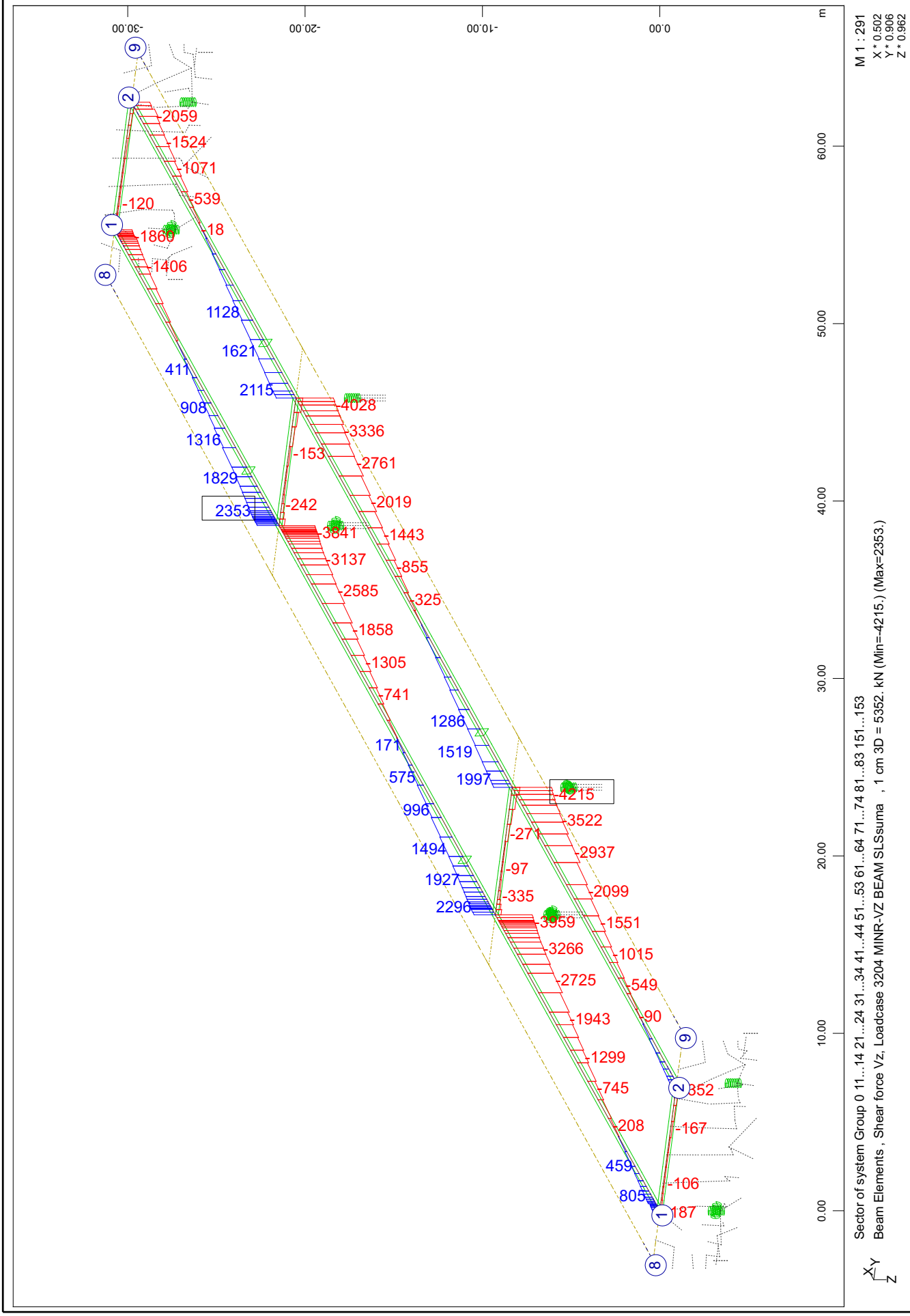

Composite bridge 38+50+38, b=14.25m, 2x2HL1100R HISTAR460 , slab 0.30m C30/37
Results for SLS characteristic combinations of loads: sum G+C+Q+F+T

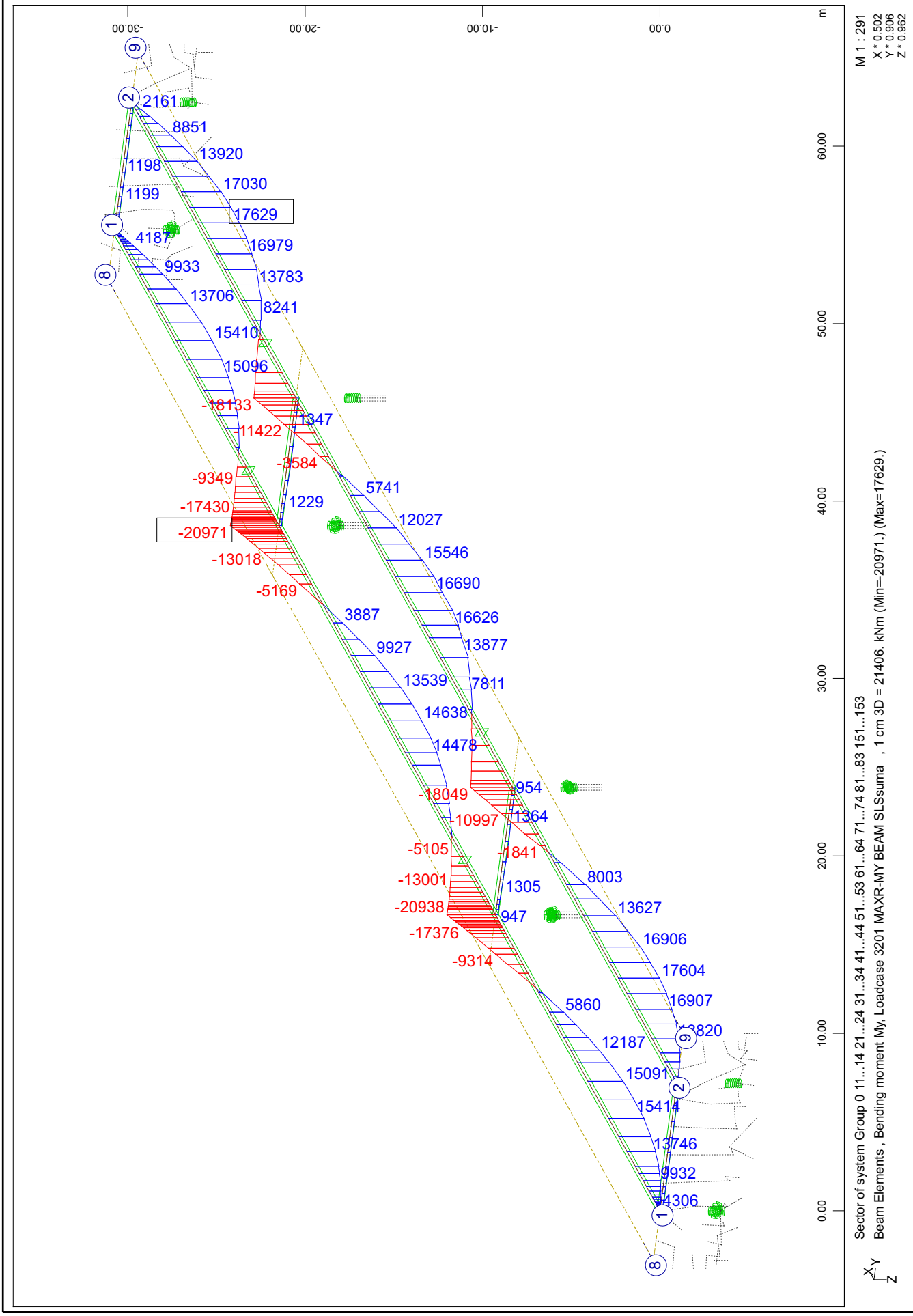

Composite bridge 38+50+38, b=14.25m, 2x2HL1100R HISTAR460 , slab 0.30m C30/37
Results for SLS characteristic combinations of loads: sum G+C+Q+F+T

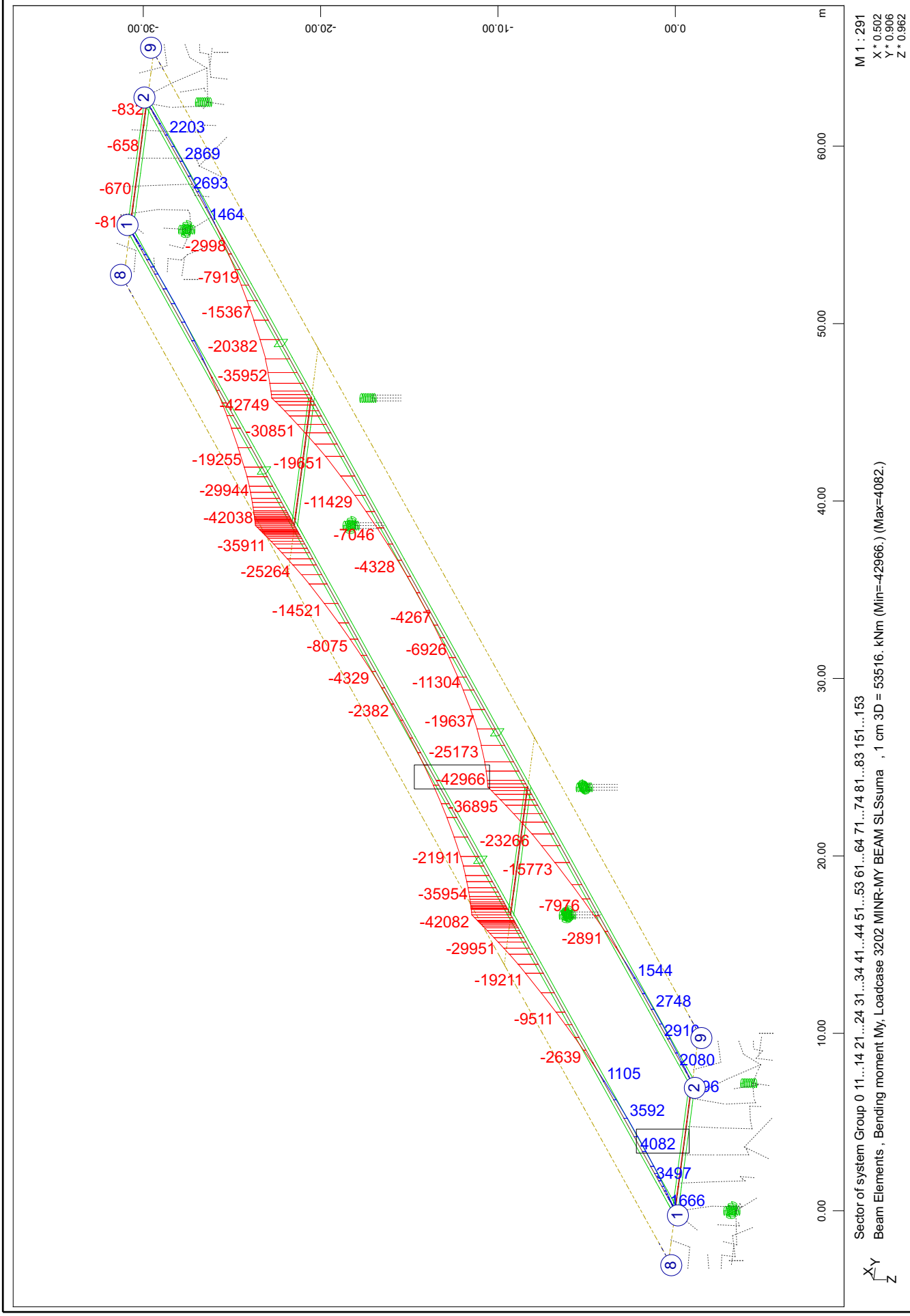

Composite bridge 38+50+38, b=14.25m, 2x2HL1100R HISTAR460 , slab 0.30m C30/37
Results for ULS design combinations of loads: sum G+C+Q+F+T

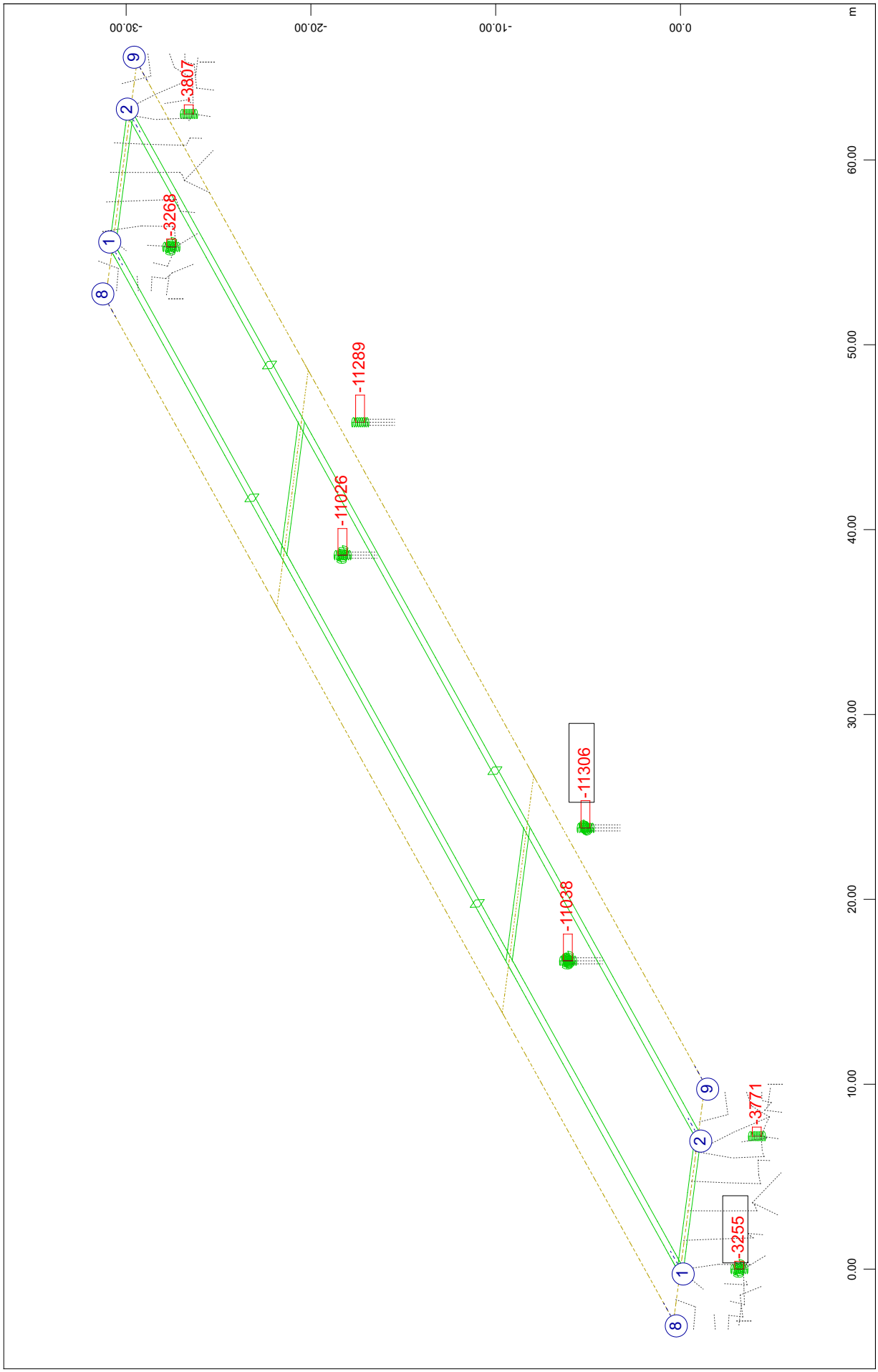

SOFiSTiK AG - www.sofistik.de

Composite bridge 38+50+38, b=14.25m, 2x2HL1100R HISTAR460 , slab 0.30m C30/37
Results for ULS design combinations of loads: sum G+C+Q+F+T

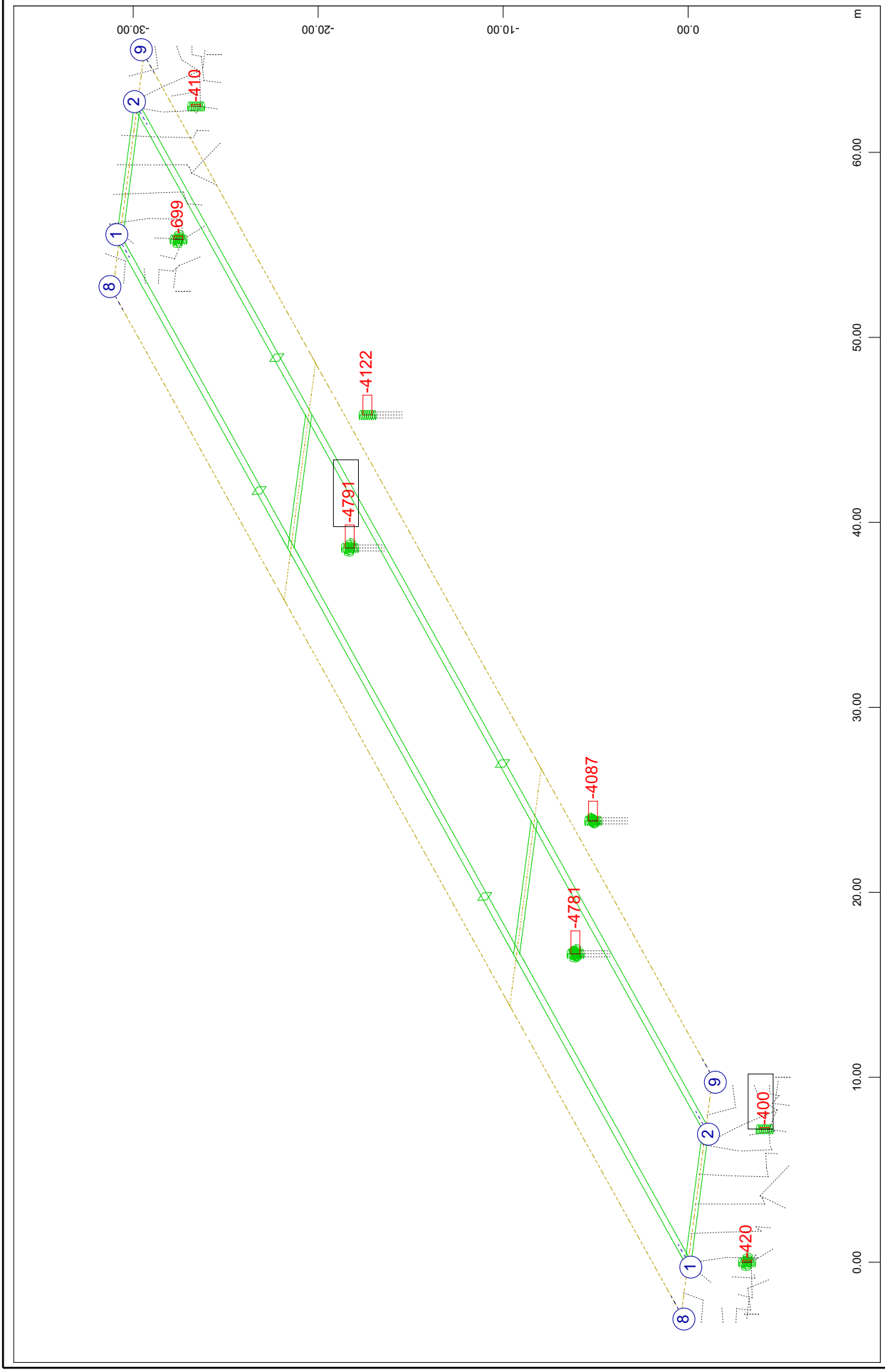

SOFiSTiK AG - www.sofistik.de

Composite bridge 38+50+38, b=14.25m, 2x2HL1100R HISTAR460 , slab 0.30m C30/37
Results for ULS design combinations of loads: sum G+C+Q+F+T

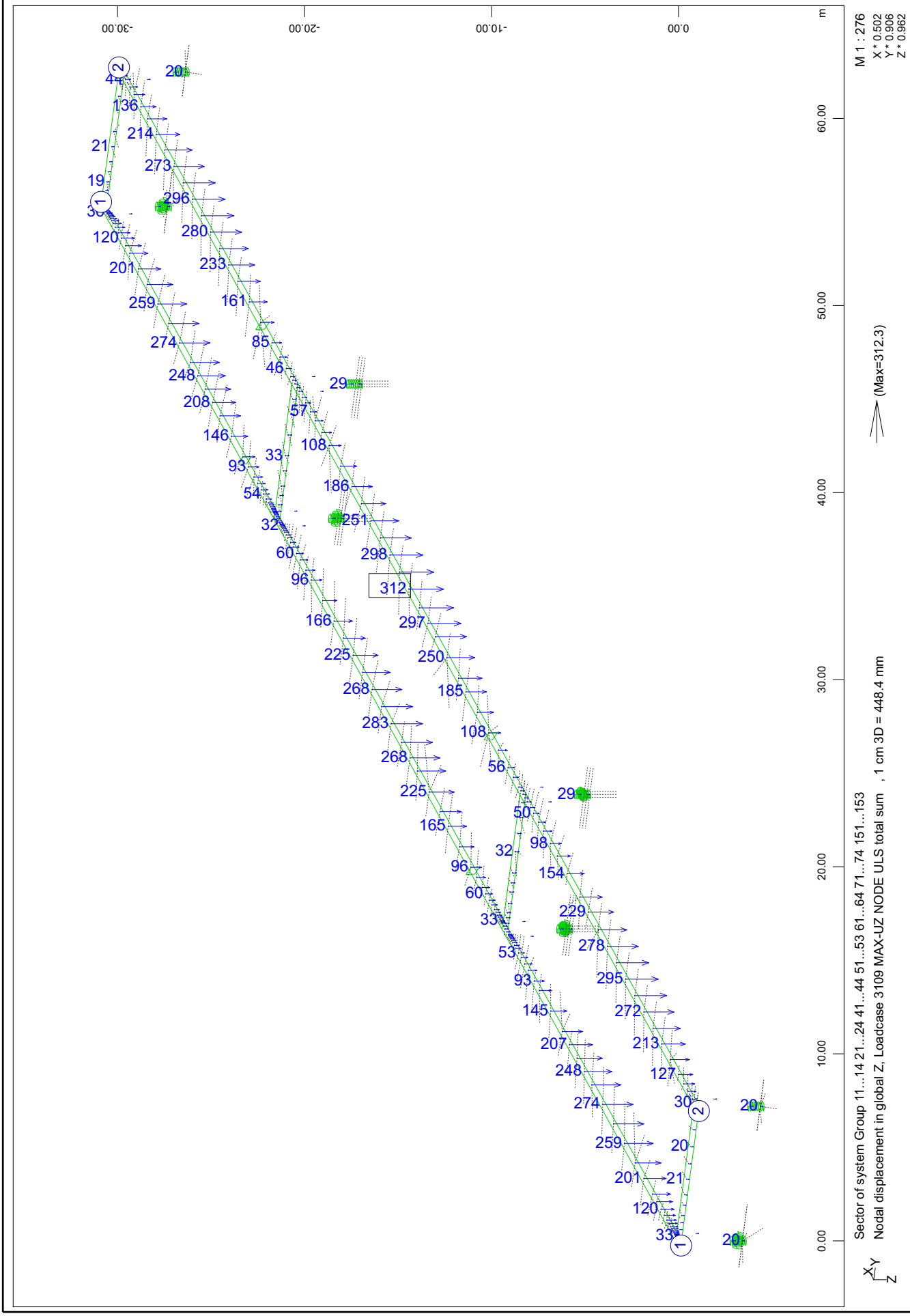

SOFiSTiK AG - www.sofistik.de

Composite bridge 38+50+38, b=14.25m, 2x2HL1100R HISTAR460 , slab 0.30m C30/37
Results for ULS design combinations of loads: sum G+C+Q+F+T

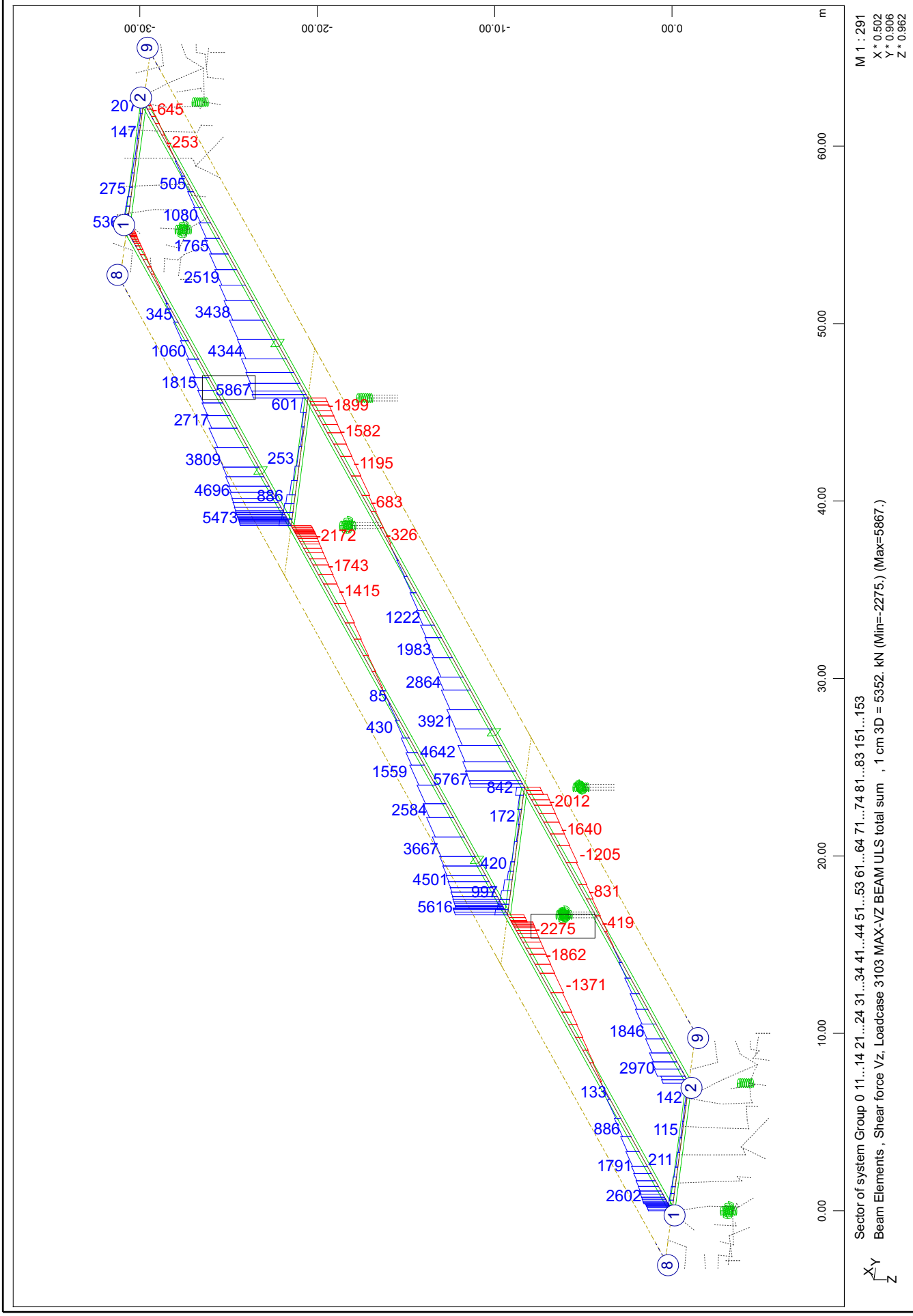

Composite bridge 38+50+38, b=14.25m, 2x2HL1100R HISTAR460 , slab 0.30m C30/37
Results for ULS design combinations of loads: sum G+C+Q+F+T

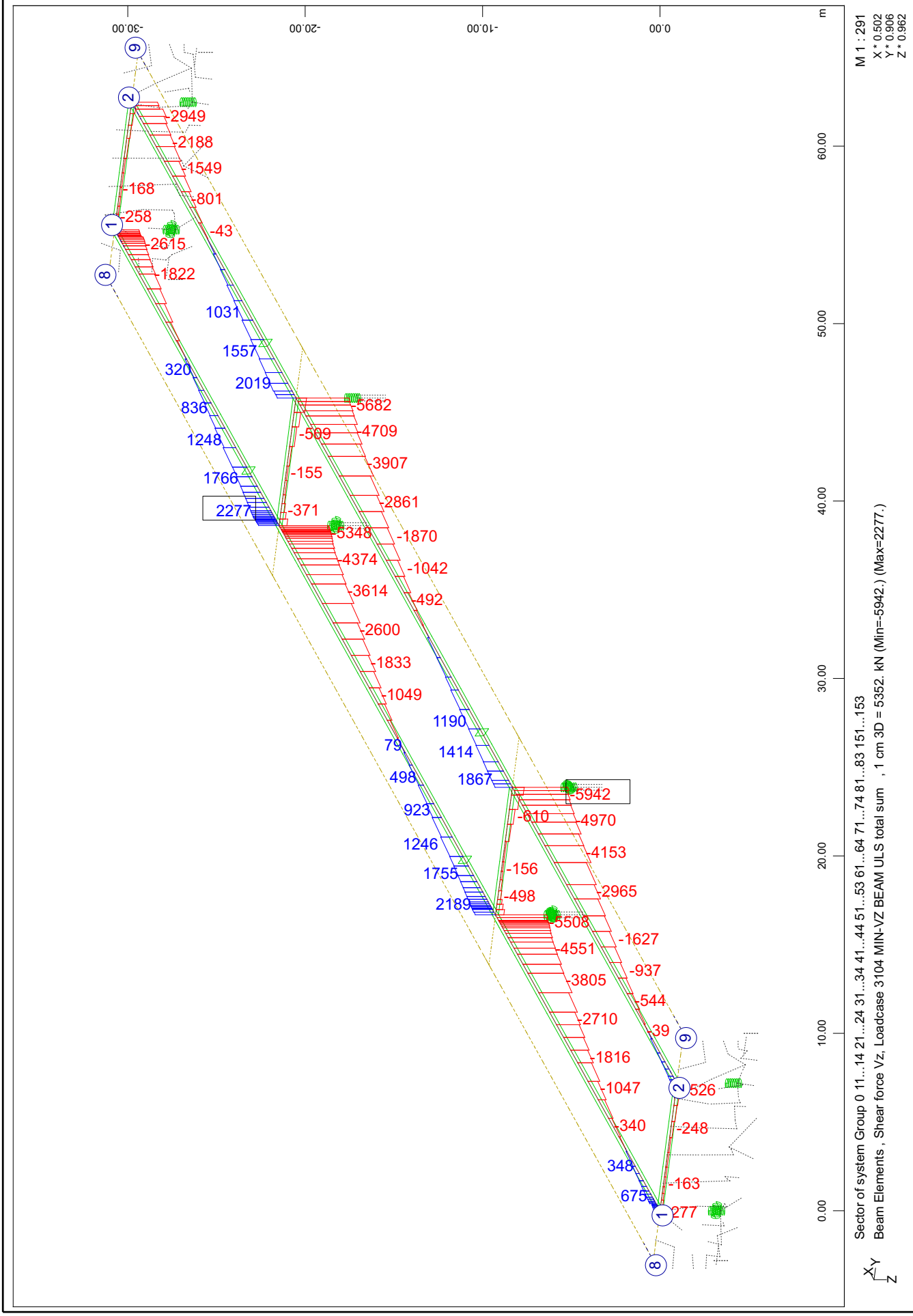

Composite bridge 38+50+38, b=14.25m, 2x2HL1100R HISTAR460 , slab 0.30m C30/37
Results for ULS design combinations of loads: sum G+C+Q+F+T

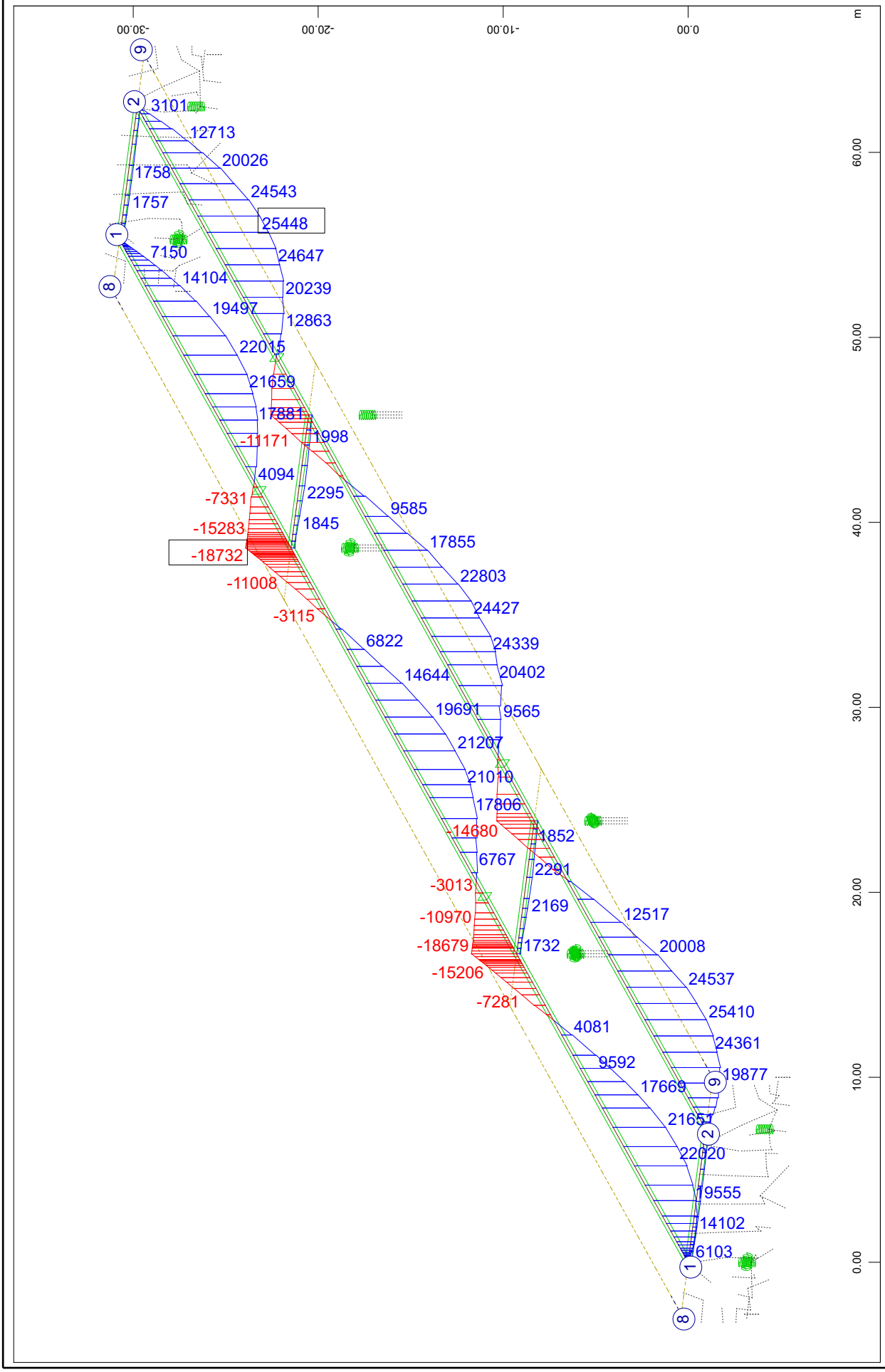

Composite bridge 38+50+38, b=14.25m, 2x2HL1100R HISTAR460 , slab 0.30m C30/37
Results for ULS design combinations of loads: sum G+C+Q+F+T

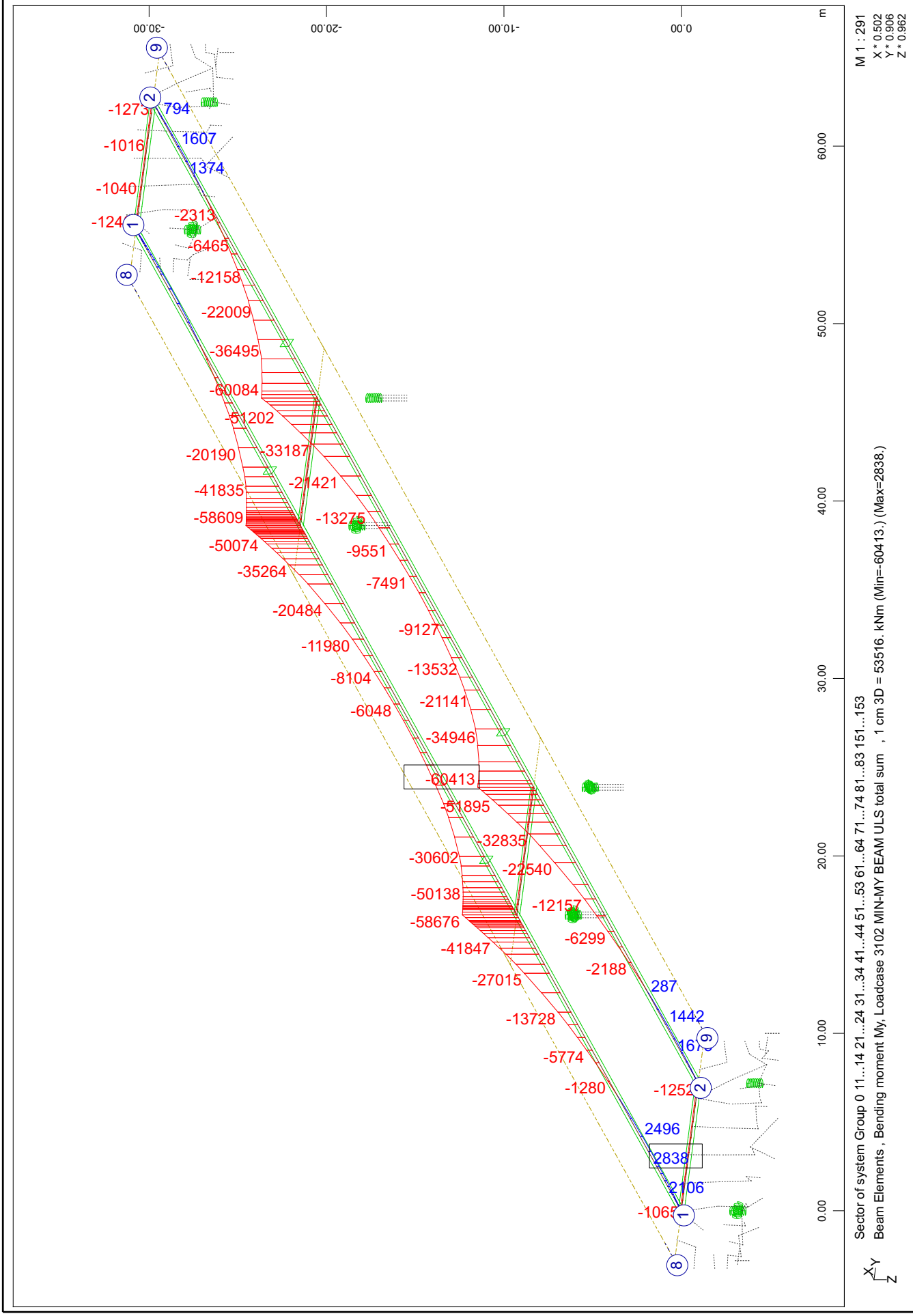

Composite bridge 38+50+38, b=14.25m, 2x2HL1100R HISTAR460 , slab 0.30m C30/37
Max. stresses for envelope of all ULS design combinations

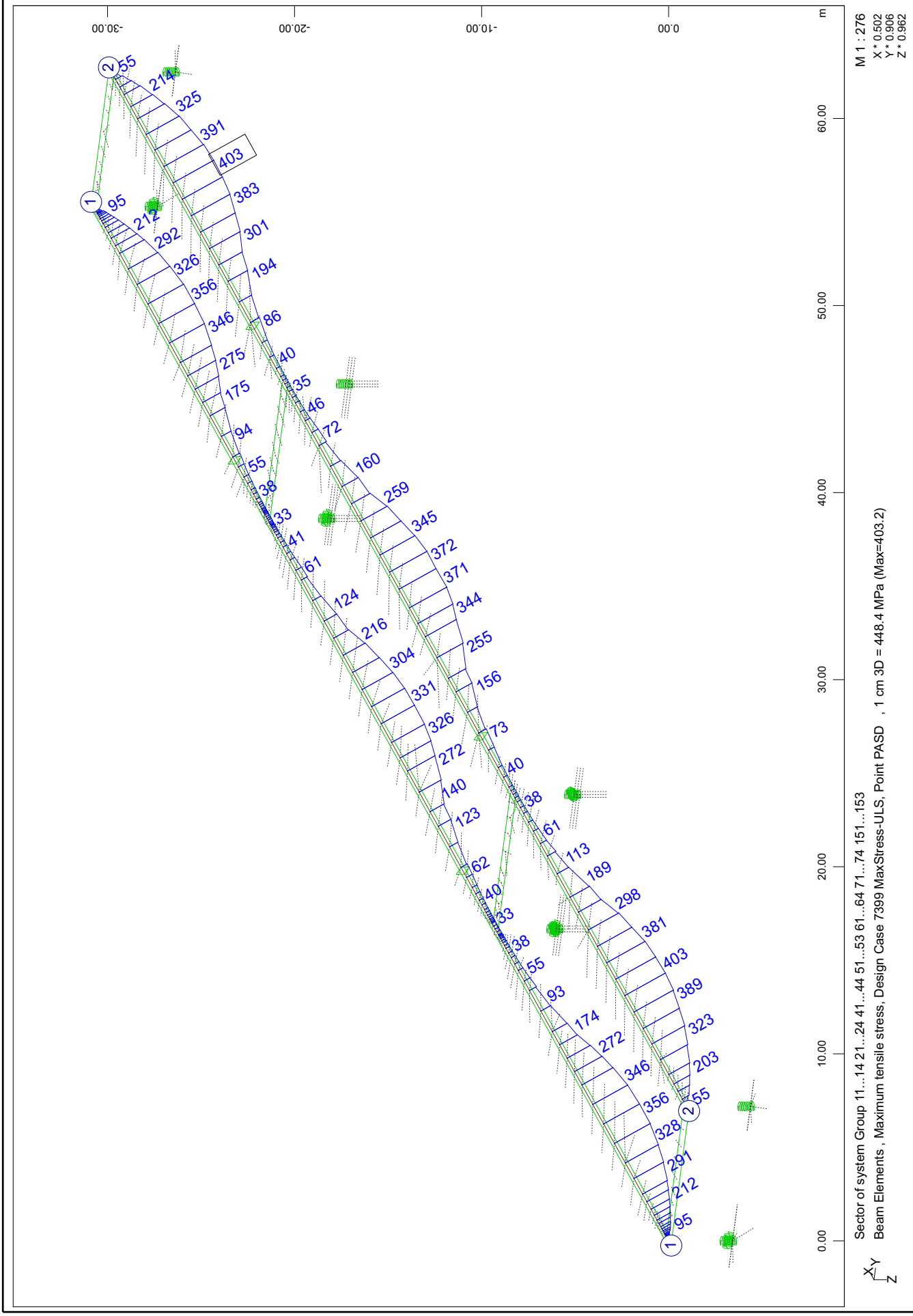

SOFiSTiK AG - www.sofistik.de

Composite bridge 38+50+38, b=14.25m, 2x2HL1100R HISTAR460 , slab 0.30m C30/37
Max. stresses for envelope of all ULS design combinations

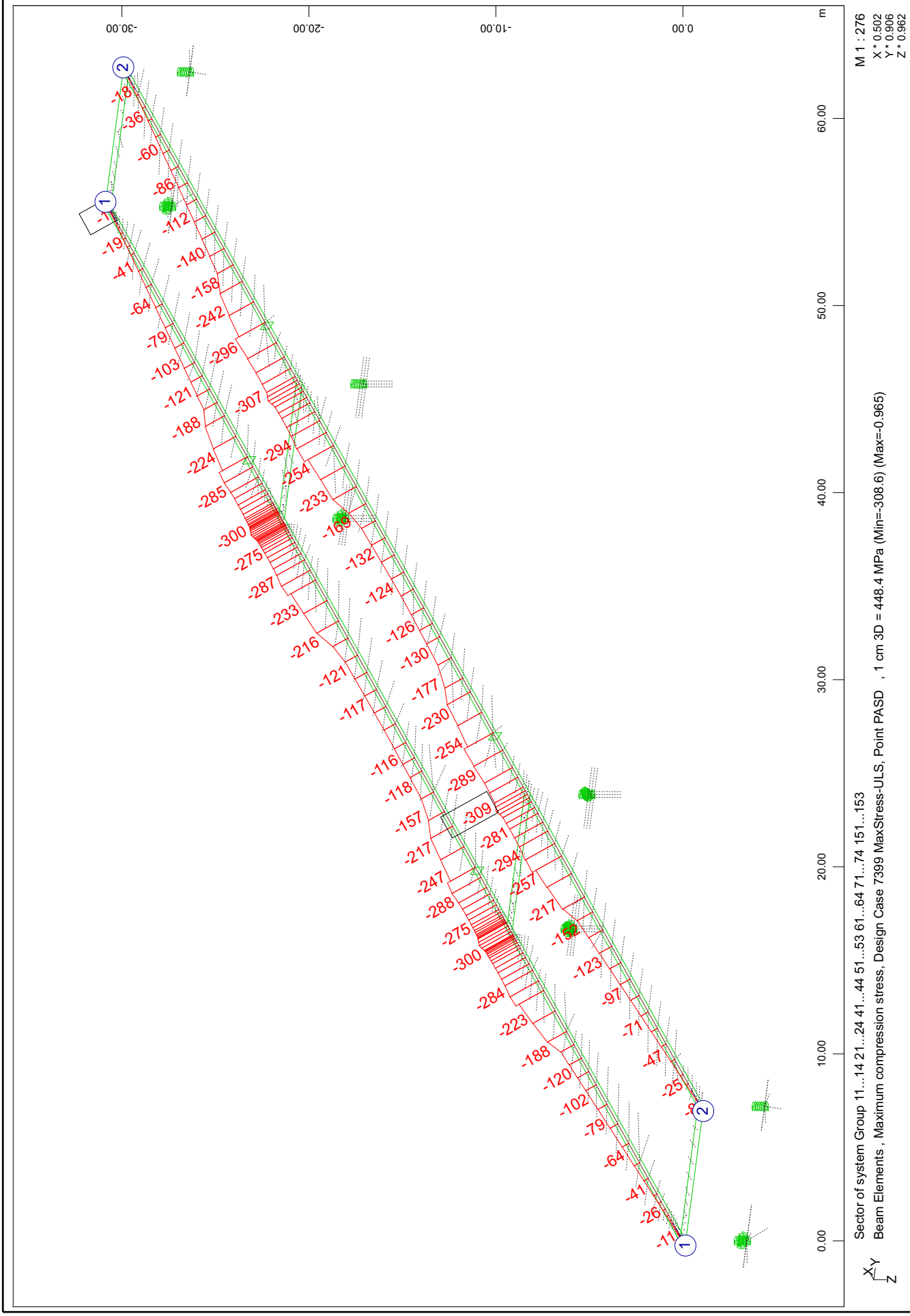

Composite bridge 38+50+38, b=14.25m, 2x2HL1100R HISTAR460 , slab 0.30m C30/37
Max. stresses for envelope of all ULS design combinations

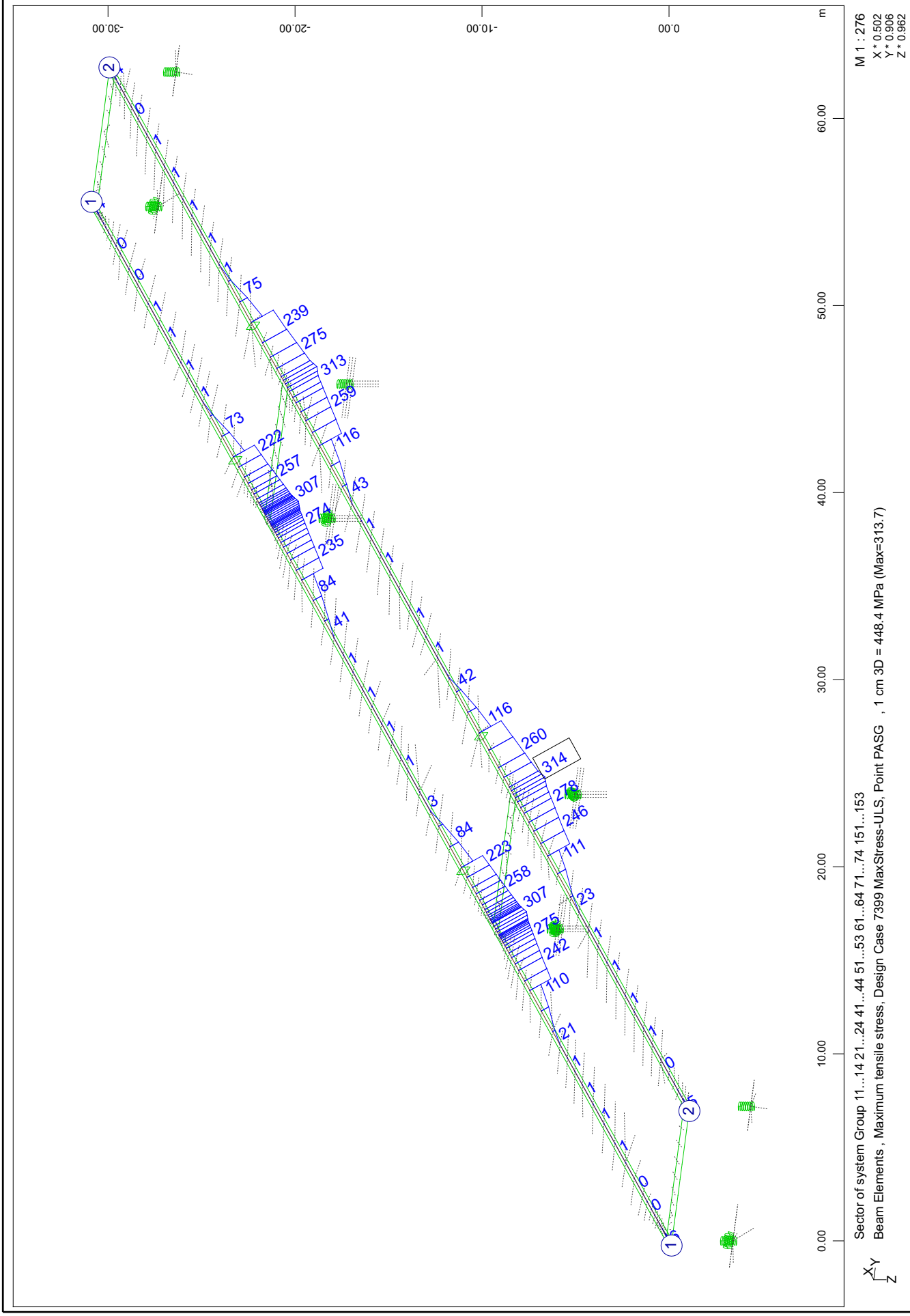

SOFiSTiK AG - www.sofistik.de

Composite bridge 38+50+38, b=14.25m, 2x2HL1100R HISTAR460 , slab 0.30m C30/37
Max. stresses for envelope of all ULS design combinations

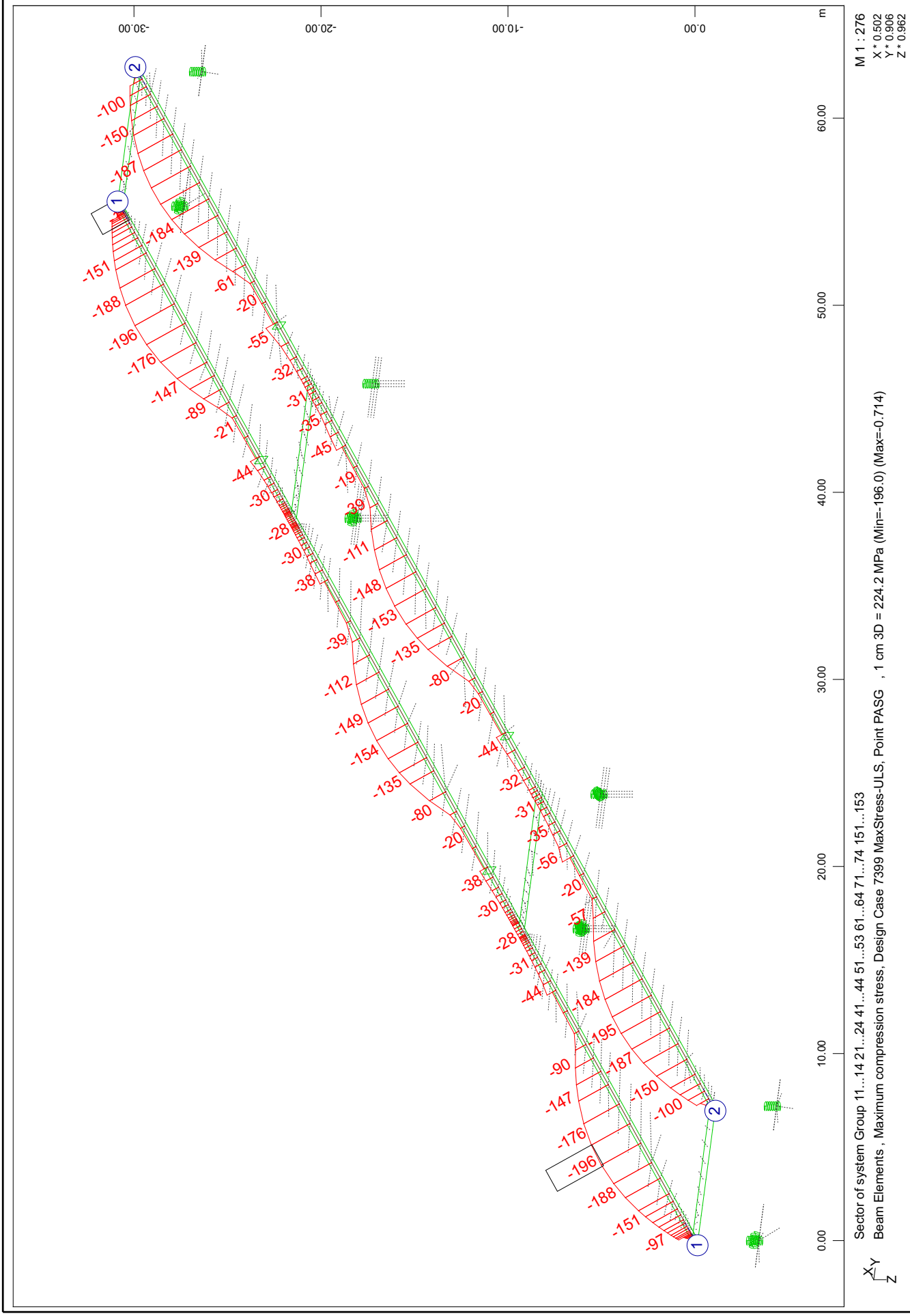

Composite bridge 38+50+38, b=14.25m, 2x2HL1100R HISTAR460 , slab 0.30m C30/37
Max. stresses for envelope of all ULS design combinations

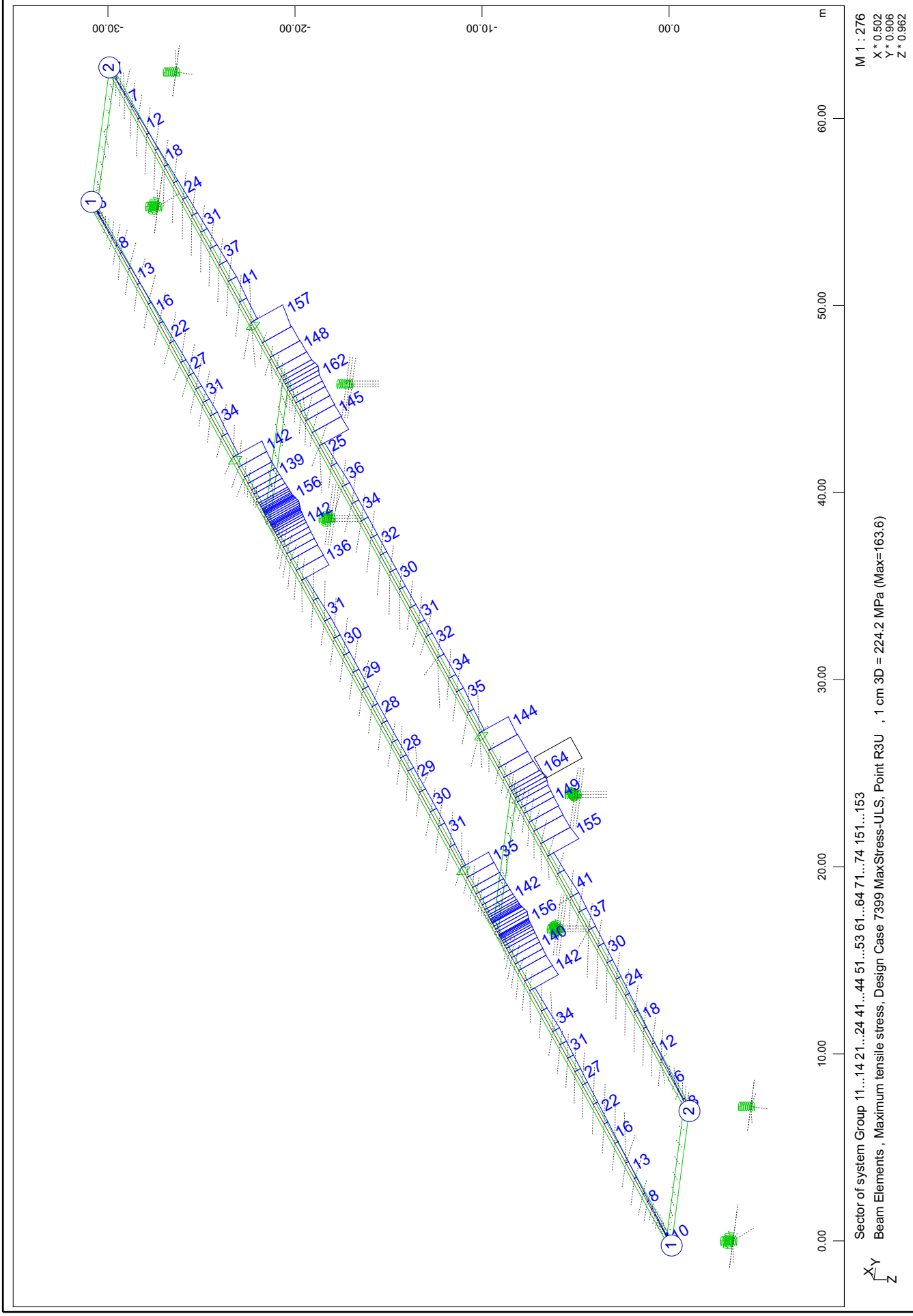

Composite bridge 38+50+38, b=14.25m, 2x2HL1100R HISTAR460 , slab 0.30m C30/37
Max. stresses for envelope of all ULS design combinations

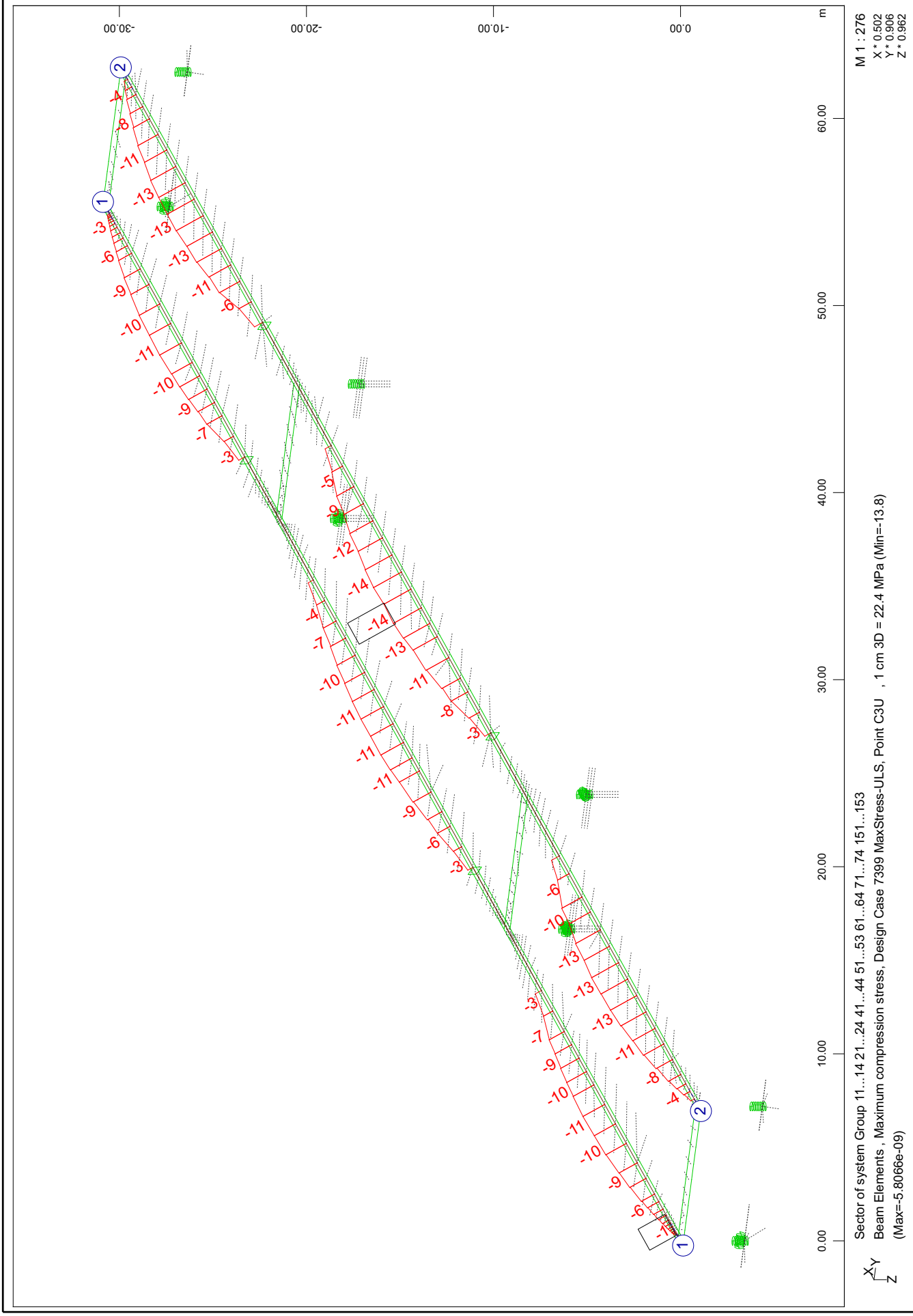

SOFiSTiK AG - www.sofistik.de

Composite bridge 38+50+38, b=14.25m, 2x2HL1100R HISTAR460 , slab 0.30m C30/37
Max. stresses for envelope of all ULS design combinations

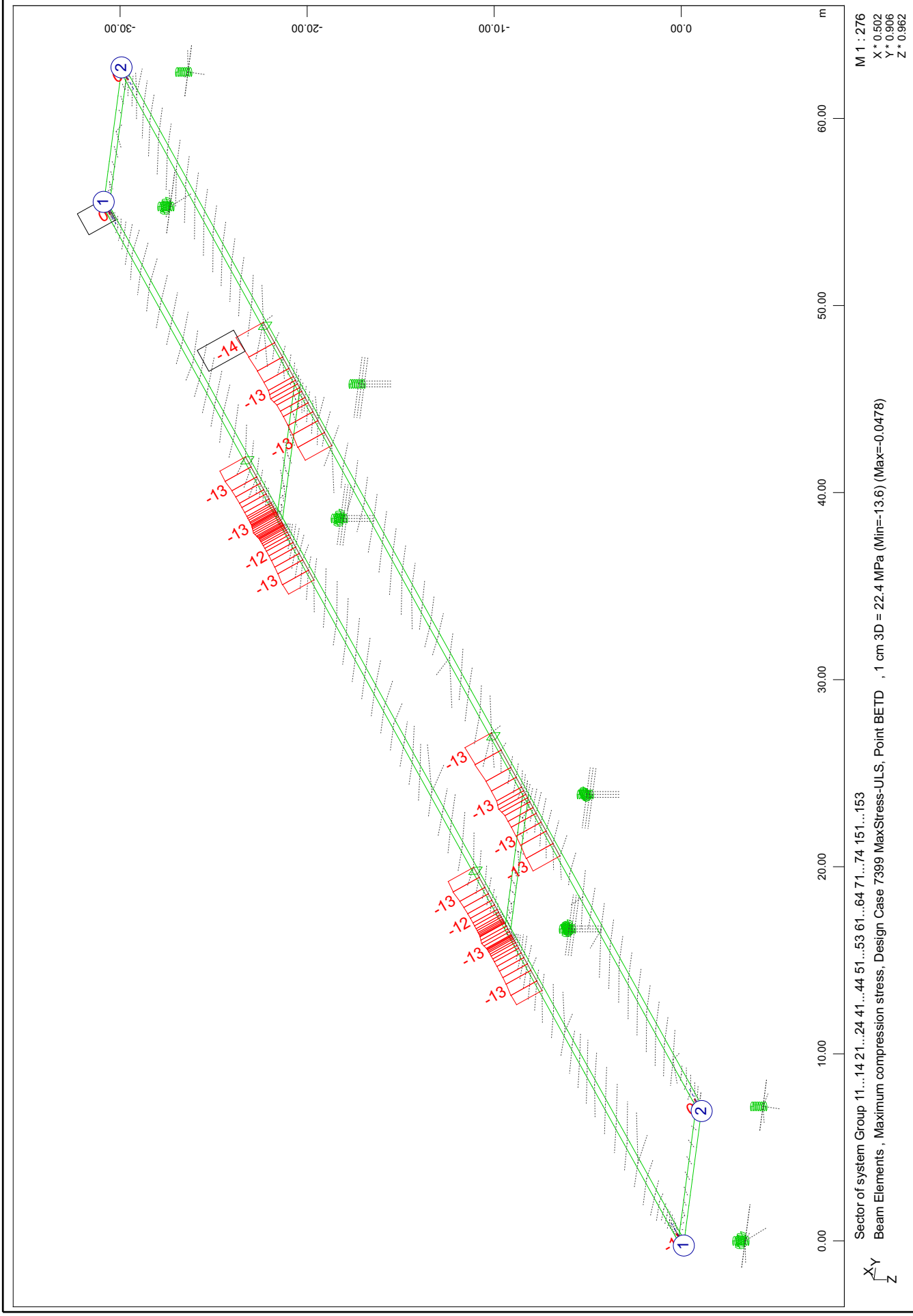

SOFiSTiK AG - www.sofistik.de

Composite bridge 38+50+38, b=14.25m, 2x2HL1100R HISTAR460 , slab 0.30m C30/37
Max. stresses for envelope of all ULS design combinations

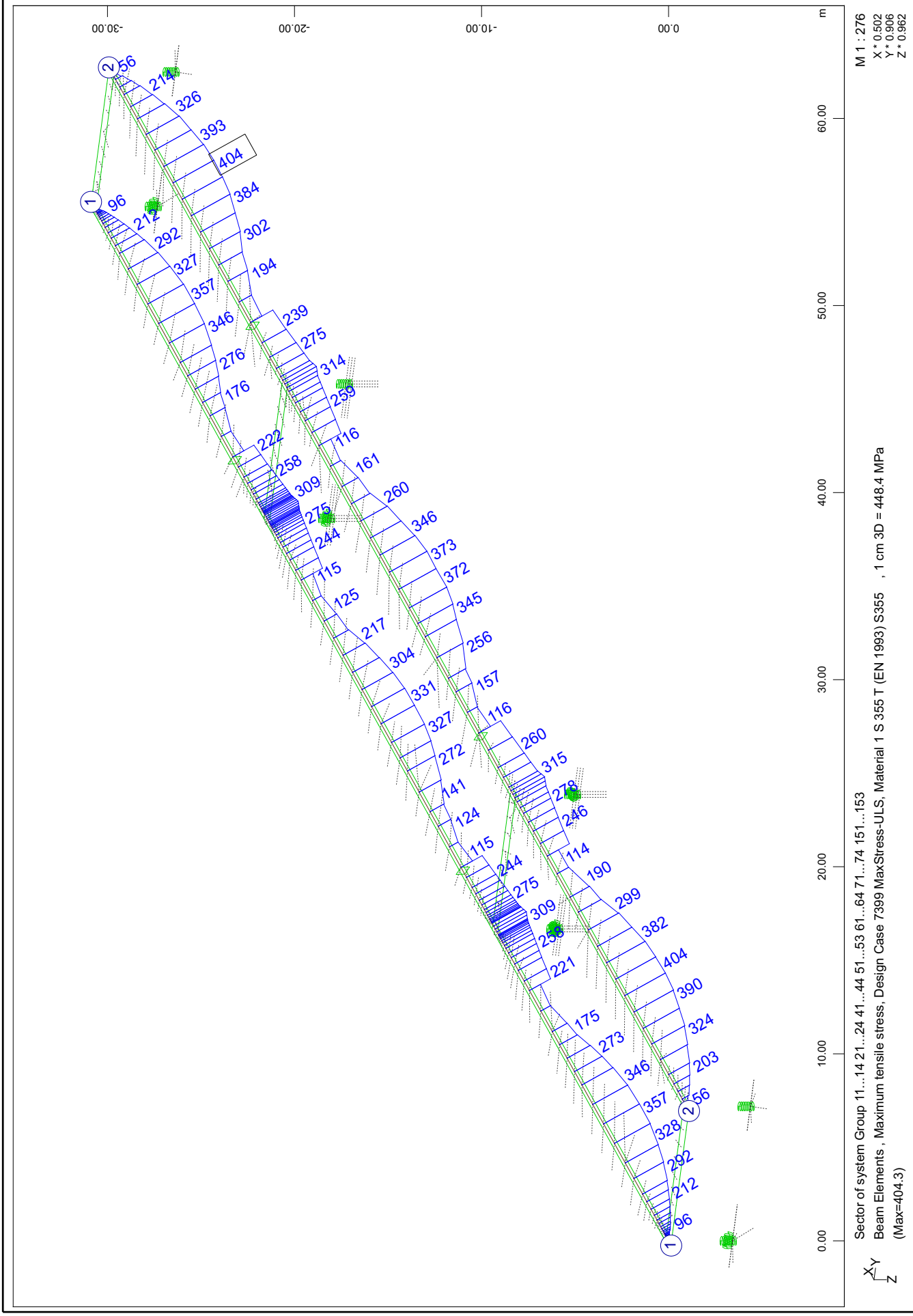

Composite bridge 38+50+38, b=14.25m, 2x2HL1100R HISTAR460 , slab 0.30m C30/37
Max. stresses for envelope of all ULS design combinations

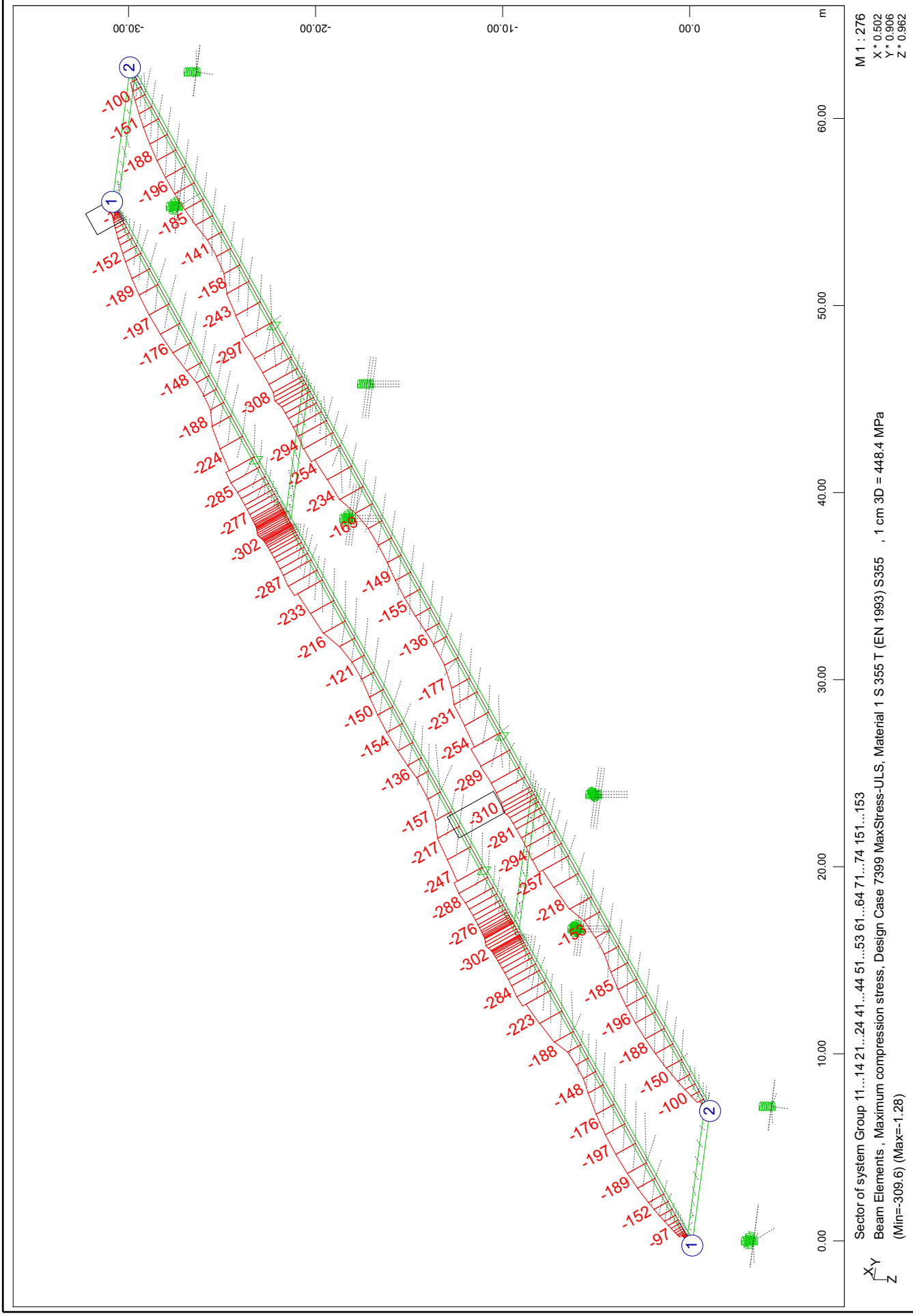

SOFiSTiK AG - www.sofistik.de
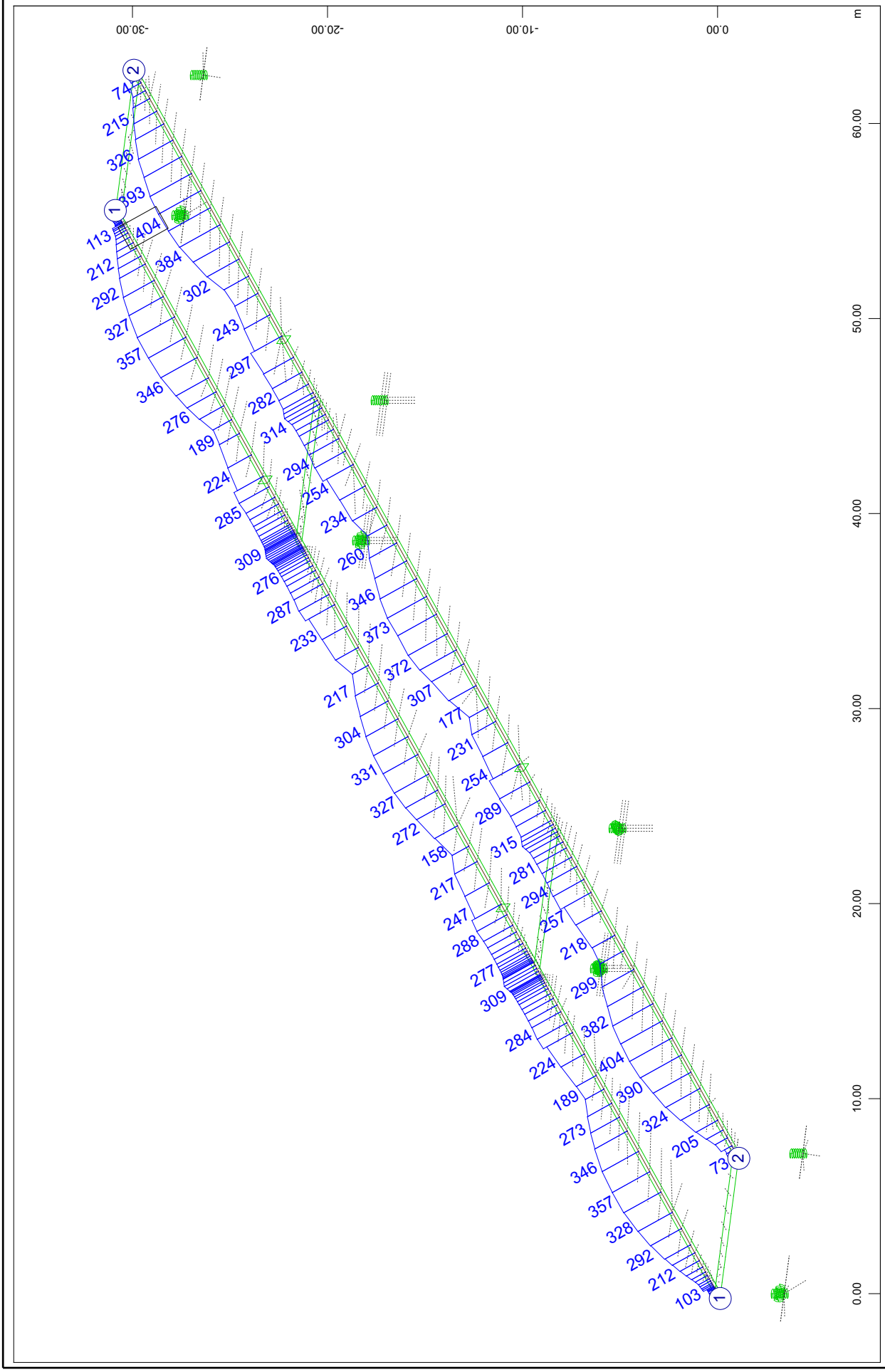
Composite bridge 38+50+38, b=14.25m, 2x2HL1100R HISTAR460 , slab 0.30m C30/37
Max. stresses for envelope of all ULS design combinations