COMBRI DESIGN MANUAL

Part II: State-of-the-Art and Conceptual Design of Steel and Composite Bridges



A project carried out with a financial grant from the Research Fund for Coal and Steel (RFCS) of the European Community.

COMBRI DESIGN MANUAL

Part II: State-of-the-Art and Conceptual Design of Steel and Composite Bridges

A project carried out with a financial grant from the Research Fund for Coal and Steel (RFCS) of the European Community.

1st Edition

Universität Stuttgart
Institut für Konstruktion und Entwurf / Institute for Structural Design
Pfaffenwaldring 7
70569 Stuttgart
Germany
Phone: +49-(0)711-685-66245
Fax: +49-(0)711-685-66236
E-mail: sekretariat@ke.uni-stuttgart.de

The present document and others related to the research project COMBRI+RFS-CR-03018 “Competitive Steel and Composite Bridges by Improved Steel Plated Structures” and the successive dissemination project RFS2-CT-2007-00031 “Valorisation of Knowledge for Competitive Steel and Composite Bridges”, which have been co-funded by the Research Fund for Coal and Steel (RFCS) of the European Community, can be accessed for free on the following project partners’ web sites:

Belgium:	www.argenco.ulg.ac.be
France:	www.cticm.com
Germany:	www.uni-stuttgart.de/ke, www.stb.rwth-aachen.de
Spain:	www.labein.es, www.apta.org.es
Sweden:	cee.project.ltu.se

Cover pictures (from left to right):

Valley bridge Haseltal near Suhl, Germany, 2006 (© KE)
Valley bridge Dambachtal near Suhl, Germany, 2005 (© KE)
Viaduct over Dordogne river near Souillac, France, 2000 (© Sétra)

Preface

This design manual is an outcome of the research project RFS-CR-03018 “Competitive Steel and Composite Bridges by Improved Steel Plated Structures - COMBRI” [15] and the successive dissemination project RFS2-CT-2007-00031 “Valorisation of Knowledge for Competitive Steel and Composite Bridges - COMBRI+” which have been funded by the Research Fund for Coal and Steel (RFCS) of the European Community. Within the RFCS research project essential knowledge has been acquired to enhance the competitiveness of steel and composite bridges and this has been incorporated in the design manual at hand which has been also presented in the frame of several seminars and workshops. The manual is subdivided into two parts to provide the reader with clearly arranged and concise documents:

► Part I: Application of Eurocode rules

In the research project the different national background of each partner how to apply and interprete Eurocode rules was brought together and a European melting pot of background information and general knowledge has been created. In order to maintain this valuable information two composite bridge structures - a twin-girder and a box-girder bridge - are covered in Part I of the COMBRI Design Manual [16] on the basis of worked examples for which the knowledge is written down in a descriptive manner. The examples include references to current Eurocode rules.

► Part II: State-of-the-Art and Conceptual Design of Steel and Composite Bridges

The national state-of-the-art in bridge design can be different so that firstly bridge types of the project partners’ countries - Belgium, France, Germany, Spain and Sweden - are introduced. They reflect the current practice in those countries and common bridge types as well as unusual bridges intended to solve special problems and some solutions being part of development projects are presented in this part of the COMBRI Design Manual. Also, improvements which can be provided to the design of steel and composite bridges are discussed and the possibilities and restrictions given by the current Eurocode rules are highlighted.

Moreover, the features of software ***EB****Plate* [26] developed in the research project to determine the elastic critical buckling stresses are presented in its contributive application for bridge design.

Finally, the authors of this design manual gratefully acknowledge the support and financial grant of the Research Fund for Coal and Steel (RFCS) of the European Community.

Ulrike Kuhlmann, Benjamin Braun
Universität Stuttgart, Institute for Structural Design / Institut für Konstruktion und Entwurf (KE)

Markus Feldmann, Johannes Naumes
RWTH Aachen University, Institute for Steel Structures

Pierre-Olivier Martin, Yvan Galéa
Centre Technique Industriel de la Construction Métallique (CTICM)

Bernt Johansson, Peter Collin, Jörgen Eriksen
Luleå University of Technology, Division of Steel Structures (LTU)

Hervé Degée, Nicolas Hausoul
Université de Liège, ArGEnCo Département

José Chica, Sandra Meno
Fundación LABEIN

Joël Raoul, Laurence Davaine, Aude Petel
Service d'études sur les transports, les routes et leurs aménagements (Sétra)

October 2008

Table of Contents

1 Introduction and scope

This design manual is based on results from the research project RFS-CR-03018 „Competitive Steel and Composite Bridges by Improved Steel Plated Structures - COMBRI" [15] and the subsequent dissemination project RFS2-CT-2007-00031 "Valorisation of Knowledge for Competitive Steel and Composite Bridges - COMBRI+", both sponsored by the Research Fund for Coal and Steel (RFCS). It is focused on the conceptual design of steel bridges and the steel parts of composite bridges and it is based on the rules in EN 1993-1-5, EN 1993-2 and EN 1994-2. Design of steel bridges is a very wide field and it can not be covered completely in this manual and a selection of topics has been made.

Part I of the COMBRI Design Manual [16] deals with the calculation of two composite bridges according to the Eurocodes. This present Part II deals with the state of the art in several countries and focus on some improvements that can be provided to the design of steel and composite bridges.

Chapter 2 gives an overview of bridge types in the countries participating in the project, Belgium, France, Germany, Spain and Sweden. It reflects the current practice in those countries and presents common bridge types as well as unusual bridges intended to solve special problems and some solutions being parts development projects. There are notable differences between the practices of the countries and the solutions presented may serve as inspiration.

Chapter 3 deals with the choice of steel grades. EN 1993-1-12 extends the range of permitted steel grades of EN 1993 up to S700 but in most cases such high grades are not feasible. The problem is usually that the fatigue requirements limit the full utilization of the strength. It is shown that hybrid girders with higher strength in the flange than in the webs are economic.

Flanges are dealt with in Chapter 4 and the main topic is bottom flanges in box-girders. Such flanges are in most cases stiffened and different types of stiffeners are discussed. The design rules of EN 1993-1-5 may lead to unsafe results for very light stiffening and minimum stiffness of the stiffeners is recommended. Further, double composite action with both top and bottom flanges being composite are described and recommendations for design are given.

Webs are discussed in Chapter 5 and the main issue is to what extent stiffeners should be used. If the method with effective cross section in EN 1993-1-5 is applied it is shown that longitudinal stiffeners are not economical for web depths below 4 m.

Chapter 6 covers cross bracings and diaphragms for I-girder bridges and box-girders. Functional requirements are described and ways to meet them are discussed. For economy it is important to minimize the man hours for fabricating the bracings.

Launching has been studied in some detail in the COMBRI research project and it is dealt with in Chapter 7. Particularly the resistance patch loading has been studied and the result is improved design rules, which will be proposed for inclusion in EN 1993-1-5. The rules allow the utilisation of quite long loaded lengths and accordingly quite high resistance. This makes it possible to launch bridges with the concrete slab in place.

2 Bridge types

2.1 General

This chapter gives an overview of bridge types in the countries participating in the project, Belgium, France, Germany, Spain and Sweden. It reflects the current practice in those countries and presents common bridge types as well as unusual bridges intended to solve special problems and some solutions being parts development projects. There are notable differences between the practices of the countries and the solutions presented may serve as inspiration. There are however also similarities and some will be mentioned here.

Pure steel bridges are unusual in all countries with some variations in the frequency. They are mainly used as decks in suspension bridges, cable stayed bridges and movable bridges. The focus here will be on composite bridges. In most cases a twin I-girder composite bridges is the most economical solution. In Europe this design is deemed safe enough although the fact that if one girder fails the whole bridge will fall down. In the US twin-girder are allowed but the safety factors are higher, which makes twin-girder bridge less competitive. With equal safety factors a twin-girder bridge will be cheaper than a multiple girder bridge, which needs more material and also more hours for fabrication and erection. An exception is if the depth of the bridge is restricted, which may make multiple girders the best alternative, especially if the span is so short that rolled beams can be used. If there are no restrictions on the girder depth the span to depth ratio is normally chosen in the range 20 to 30. The higher end of the range applies to interior spans in continuous bridges and the lower end to simply supported bridges and end spans. If the support locations can be chosen without restrictions it is favourable to make the end spans of a continuous bridge shorter 0,60 to 0,85 times the length of the interior spans.

The concrete deck of a twin-girder bridge can be reinforced up to a width of approximately 13 m and for wider decks transverse prestressing is commonly used. Another solution for extending the use of reinforced concrete is to reduce the span in the transverse direction by putting a small beam supported by the cross braces in the middle between the main girders. The width of a reinforced concrete deck can also be made wider by the use of I cross-girders connected to the slab and extended with cantilevers outside the main girders, see Figure 2-1.

Figure 2-1: Wide I-girder bridge with cantilevering cross girders (Bridge near Remoulins, France).

Figure 2-2: Box-girder bridge with edge beams supporting the deck. (Verrières viaduct near Millau, France, 2002).

Box-girders have an advantage of very high torsional stiffness, which is useful in curved bridges. It requires less depth than I-girders. Also for a straight bridge there is an advantage in that eccentric traffic loads are carried by the whole cross section. This leads to less material than for I-girders but it is

normally counteracted by higher costs for fabrication and erection. If a box-girder is chosen it should normally be a single cell box. Multiple cell boxes are sometimes used with the purpose to bring down the transverse span of the deck but if that is needed it is a better idea to use a small longitudinal beam supported on the cross braces. An alternative is to use beams supporting the cantilevering part of the deck as shown in Figure 2-2. Box-girders are made of thin plates and they are sensitive to cross sectional distortion. This has to be counteracted by diaphragms or cross braces. Cross braces are usually the cheapest alternative.

The transportation of bridge parts from work shop to erection site sometimes put restrictions on the design. Ideally the erection site and the work shop have access to navigable water and very large pieces can be transported. One extreme example is the Öresund bridge between Denmark and Sweden where 140 m long spans with 11 m deep trusses and concrete deck were shipped from Spain. If transport on road is necessary there are restrictions that vary from country to country and those restrictions may influence the optimal design. It may be more economical to use a lower girder than to make a longitudinal splice on the erection site.

Multiple span bridges can be made either continuous or as series of simply supported spans. The latter may lead to lower initial investment but they require joints at all supports and the maintenance cost of those joints leads to a higher life cycle cost. Further, it is less comfortable to drive on a series of simple spans. The conclusion is that a continuous bridge is preferable.

2.2 Belgium

2.2.1 Introduction

In Belgium, the road and bridge facilities are managed or co-managed by regional administrations.

There are 3 regions in Belgium (see Figure 2-3):

- Region of Brussels (In 2008: 161,4 km², 1067162 inhabitants, 6601 inhab/km²)
- Flemish Region (In 2008: 13522 km², 6117440 inhabitants, 442 inhab/km²)
- Walloon Region (In 2008: 16844 km², 3435879 inhabitants, 202 inhab/km²)

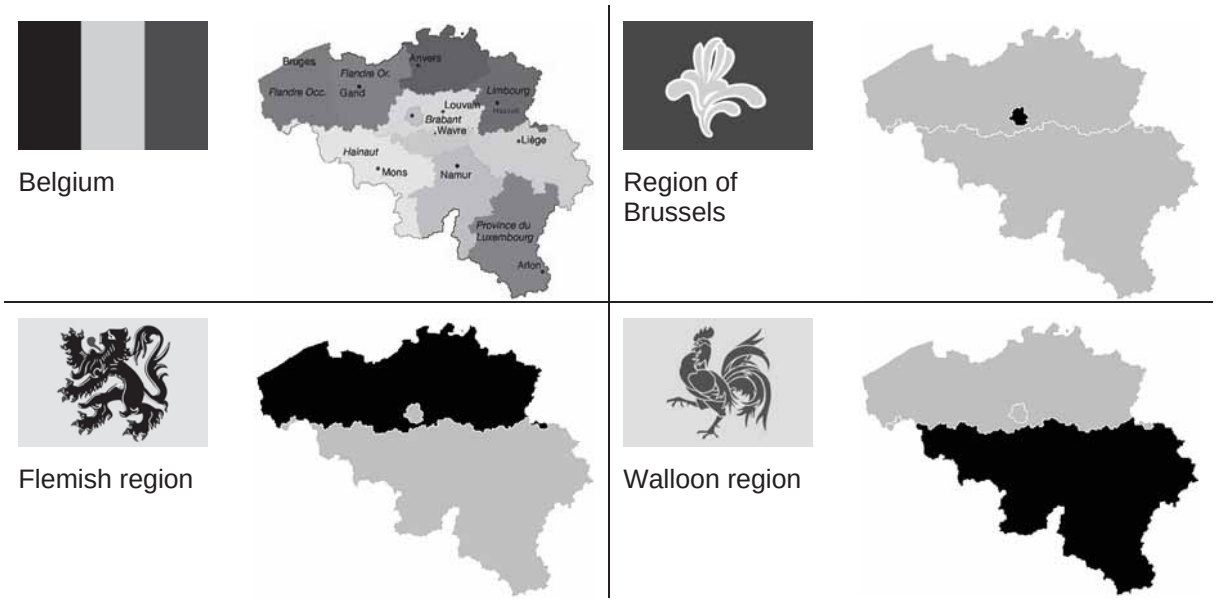

Figure 2-3: Three regions in Belgium (Region of Brussels, Flemish and Walloon region).

This report contains data dealing only from the Walloon Region and provided by the MET administration (Regional Ministry of Equipment and Transportation - MET). These data are not exhaustive but give a good tendency on the set of bridges managed by Walloon Region. This tendency can roughly be extrapolated to the whole Belgium.

Concerning the railway bridges in Belgium, the data are coming from results elaborated during a FP6 European project dealing with sustainable development, global change & ecosystems (Sustainable Bridges – Assessment for Future Traffic Demands and Longer Lives). The data presented within this report have been collected from the 17 European railway administrations, including the Belgian railway administration NMBS-SNCB.

2.2.2 Road bridges in Walloon Region

In june 2002, the Walloon Region was managing, in all or partly, 3250 bridges. The most important part of these bridges is linked to road and road-transport networks. Additionally, some bridges are managed in sharing between MET and other organisms or institutions, such as for example SNCB (National Railway Company of Belgium). These bridges present a great variety, by their mode of construction (i.e. type of structure) and by the materials used. This diversity is illustrated by the following Figure 2-4 and Figure 2-5 which give the distribution in terms of types of structure and materials.

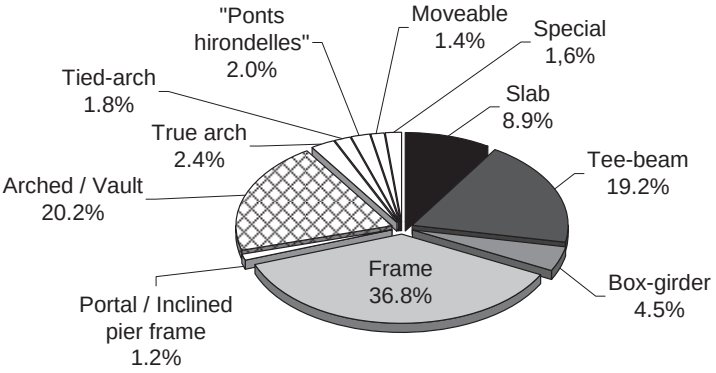

Figure 2-4: Distribution of existing structural types of road bridges in the Walloon region.

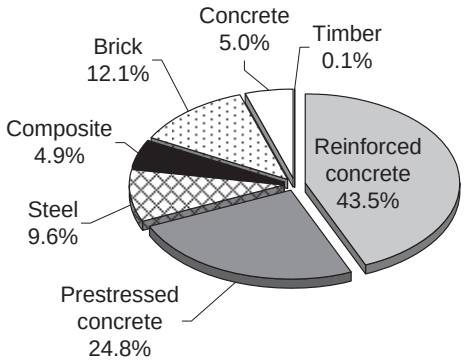

Figure 2-5: Distribution of existing bridge types of road bridges in the Walloon region.

76 % of the bridges in the Walloon Region are frame bridges, arches bridges or beam bridges. The most common material is concrete, either reinforced (44 %), prestressed (25%), unreinforced (5 %) or used in combination with steel (composite bridges). Composite bridges represent 5 % of all the bridges in Walloon region (around 160 composite bridges).

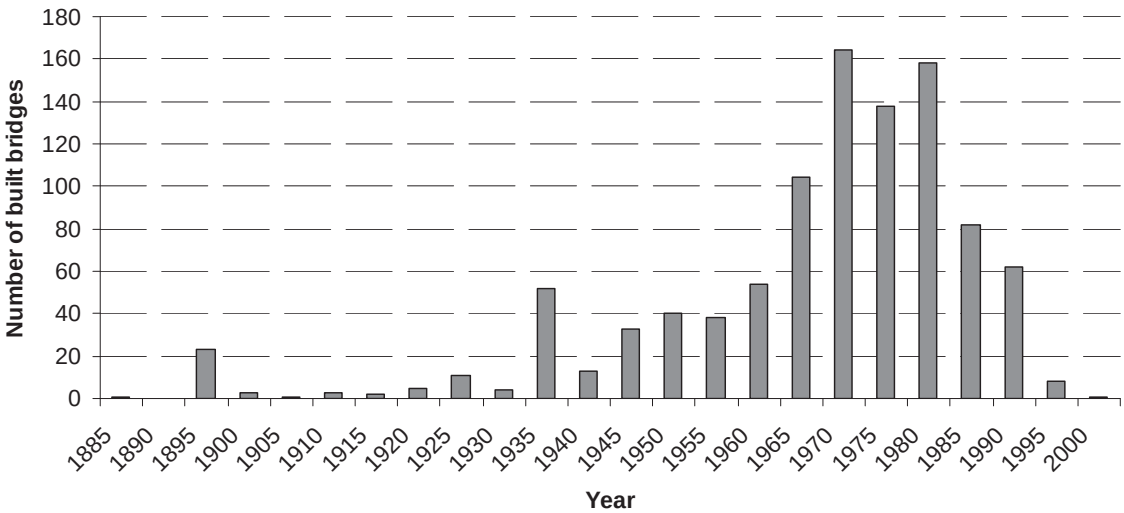

Figure 2-6: Number of bridge openings per year in the Walloon region.

An important element in the long-term management of bridges is the age of bridges. The year of construction is illustrated for the bridges currently in service on Figure 2-6. Figure 2-6 is interesting on several aspects:

- A significant increase of bridges is observed from 1935. This is related with the appearance of the first highways in Belgium.
- Between 1940 and 1945, the number of bridges bought is reduced due to 2nd world war is observed.
- In the following years, a slow and regular increase of the number of bridges in service is observed. A maximum is reached in years 1970-1975, followed by a slight fall probably due to the crisis which followed the first oil crisis in 1973-1974.
- Since 1985, a very significant reduction of the number of bridges put into service can be noticed. This fall finds its reason on one hand in the more severe economic context of these last years, but also in a saturation of the road network.
- In present time, the building of a new bridge in Belgium is rare. The main activity is replacement, repairing or reconstruction of old bridges. The number of newly bought bridges is thus expected to remain very low for the next years.

Another interesting data are the overall length of bridges. This information gives an idea of the size (and indirectly of the cost) of the bridges. The distribution is plot on Figure 2-7:

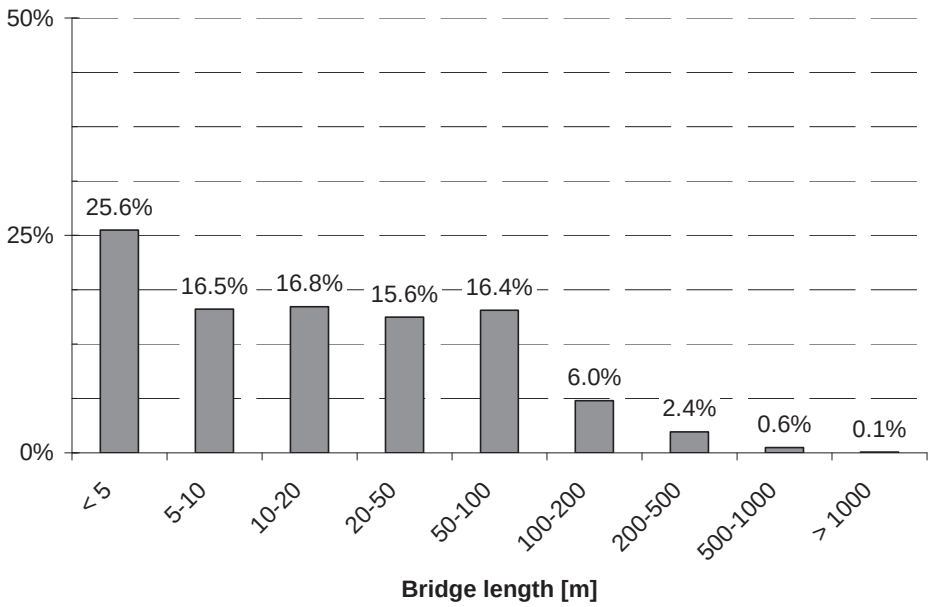

Figure 2-7: Distribution of bridge lengths of road bridges in the Walloon region.

25 % of Walloon bridges have a total length less than 5 m. 49 % of Walloon bridges have a total length ranging between 5 and 50 m, which correspond to the most common bridges included in the road-transport network. A rather significant number of bridges between 50 and 100 m is observed, essentially on highways, for the crossing of secondary valleys. Finally, 9 % of Walloon bridges exceeds 100 m long. This distribution of bridge lengths is rather representative on one hand of the relief of the country (some big fluvial valleys, a significant number of secondary valleys and a big amount of small watercourses), but also of the high density of the communication network, which implies frequent crossings.

2.2.3 Railway bridges in Belgium

Figure 2-8, Figure 2-9 and Figure 2-10 are the summary of the investigation realized in the 6th Framework project: "Sustainable Bridges – Assessment for Future Traffic Demands and Longer Lives". The Belgian railway administration NMBS-SNCB manages a total of 5206 bridges.

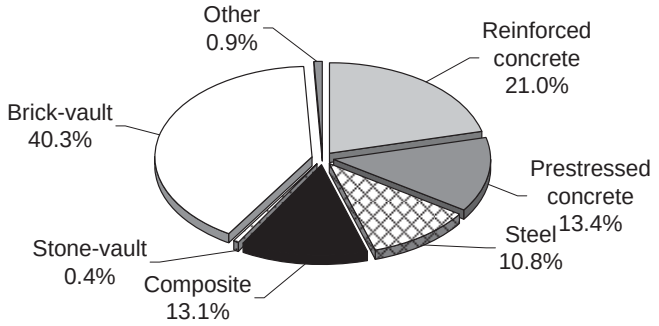

Figure 2-8: Distribution of existing bridge types of railway bridges in Belgium.

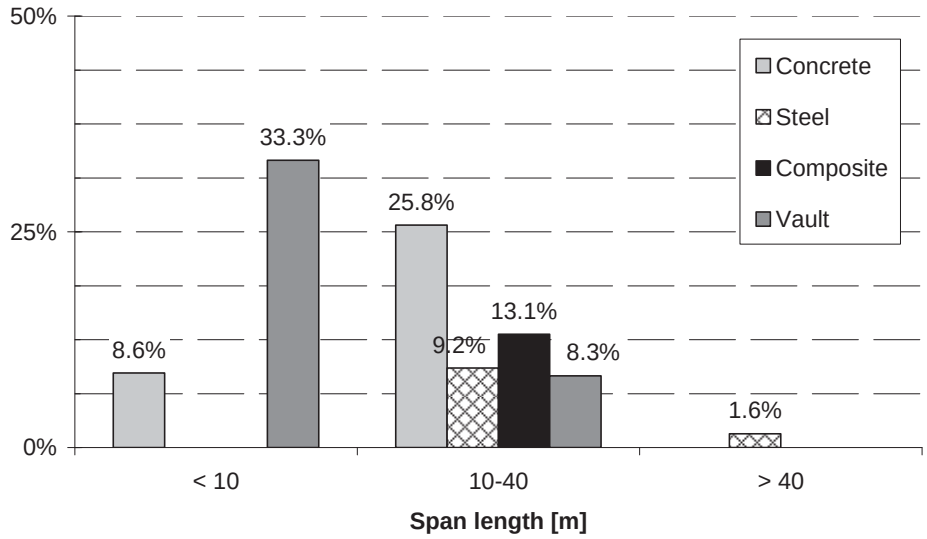

Figure 2-9: Span profiles of existing railway bridges in Belgium.

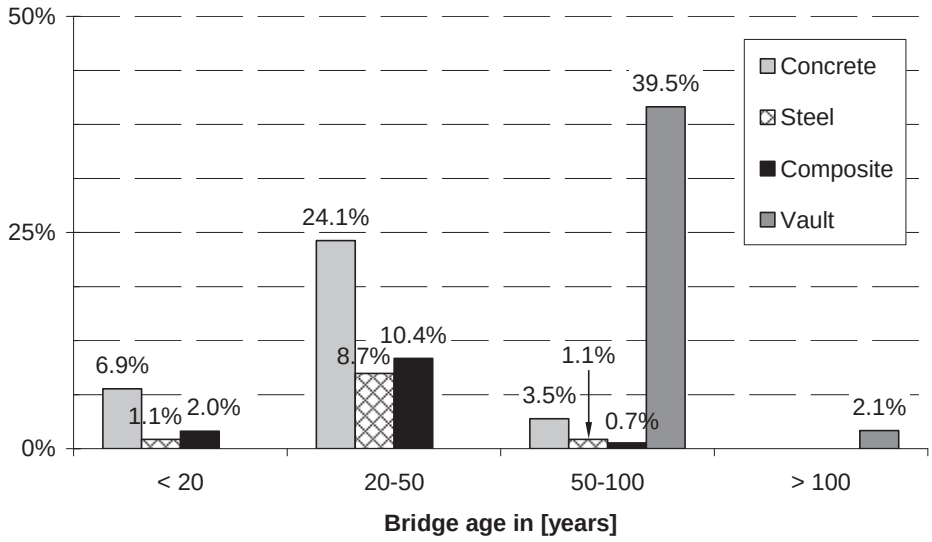

Figure 2-10: Bridge age profiles of railway bridges in Belgium.

At the sight of Figure 2-8, Figure 2-9 and Figure 2-10, it can be observed that:

- 41 % of railway bridges in Belgium are arch bridges and are almost all masonry bridges. All these arch bridges have a span less than 40 m and have been constructed more than 50 years ago.
- 21 % of railway bridges in Belgium are reinforced concrete bridges, 13 % are prestressed concrete and 13 % are composite or encased bridges.

- Only 11 % of railway bridges are in metal (steel). All railway bridges constructed in Belgium and having a span higher than 40 m are in steel.
- All railway bridges having a span less than 10 m are mainly masonry arch bridges or concrete bridges.
- All steel-concrete composite railway bridges have a span between 10 m and 40 m.

2.2.4 Bridge examples

2.2.4.1 Composite girder bridge

The "Eau Rouge" viaduct

The "Eau Rouge" viaduct is a viaduct of the Verviers-Prüm E42 (A26) highway. It has been constructed during the years 1989-1993. The viaduct of Eau rouge has a total length of 652.5 m with a principal span of 270 m constituted by two independent metal arches in shape of rectangular box. The composite slab was partly constructed by launching and partly with a crane.

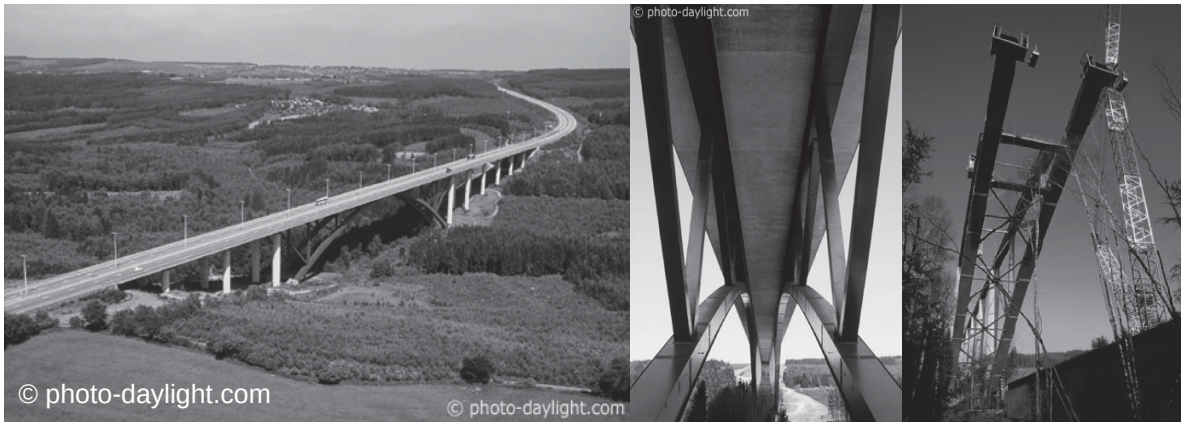

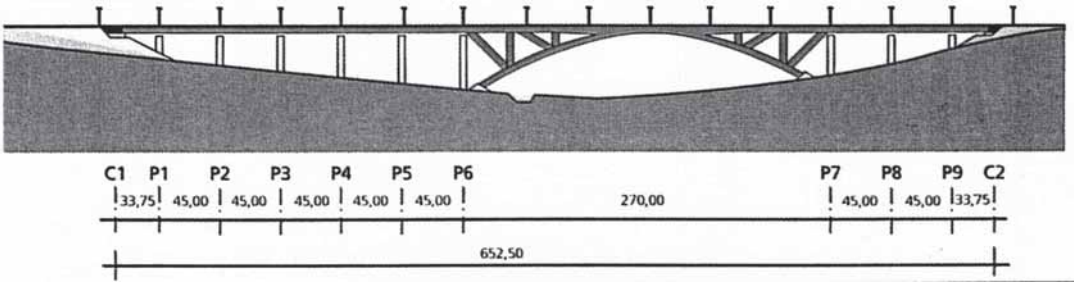

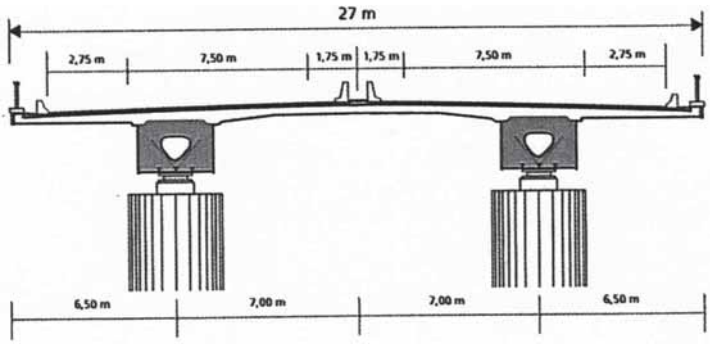

Figure 2-11: The "Eau Rouge" viaduct near Malmédy, Belgium, 1993.

The "Gueule" viaduct

The "Gueule" viaduct in Moresnet is a viaduct of the line 24 Glons-Aachen railway. The "Gueule" viaduct has a total length of 1,108 m and is composed of 22 isostatic spans of 48 m each. The bridge is constituted by two main steel truss girders with a height of 6.495 m linked by a 30 cm thick reinforced concrete slab. The bridge was constructed in 1914-1917. In 2002-2005, the viaduct has been strengthened by additional concrete shell on every pier and by the replacement of all truss elements of the superstructure.

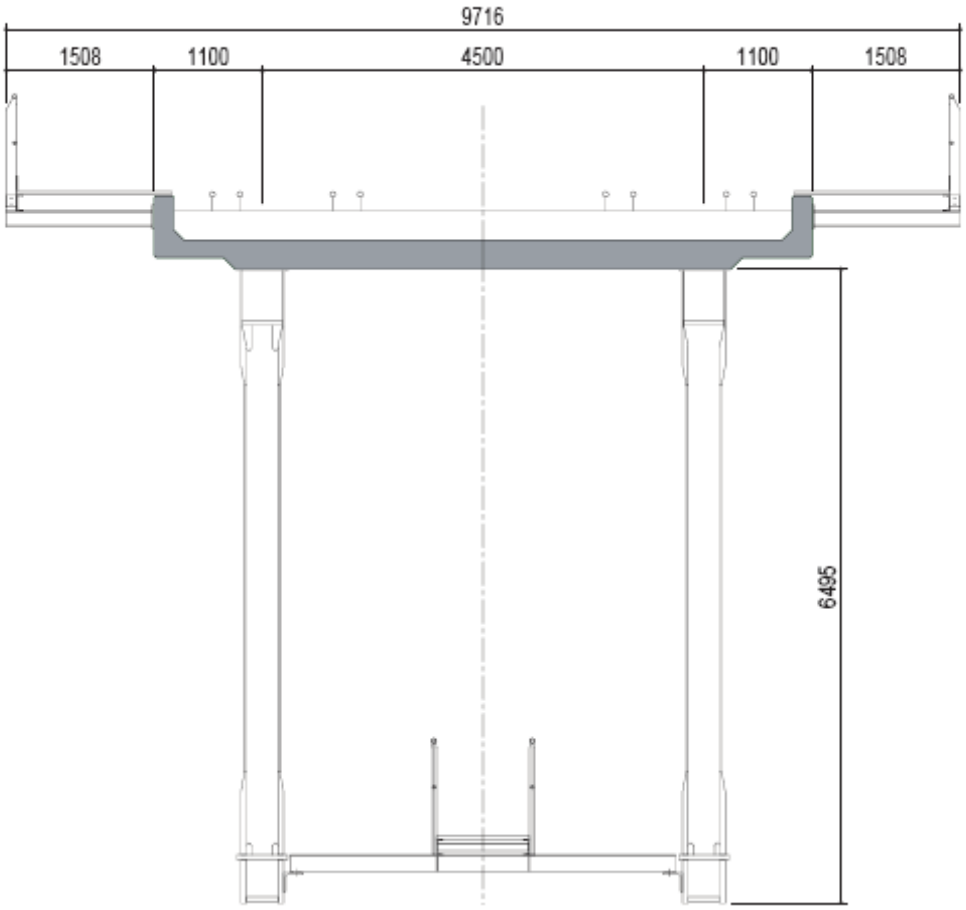

Figure 2-12: The "Gueule" viaduct near Moresnet, Belgium, 1917/2005.

The "Secheval" viaduct

The "Secheval" viaduct is a viaduct of the Maastricht-Liège-Arlon E25 (A26) highway. It was constructed during the years 1975-1979. The "Secheval" viaduct has a total length of 294.7 m with 5 spans respectively of 39.35 m, 72 m, 72 m, 72 m and 39.35 m. It is constituted by two independent parallel decks. The metal parts have been constructed on the bank then launched. Each bridge is constituted by two main steel girders of a height of 3.6 m linked by a 24 cm thick reinforced concrete slab.

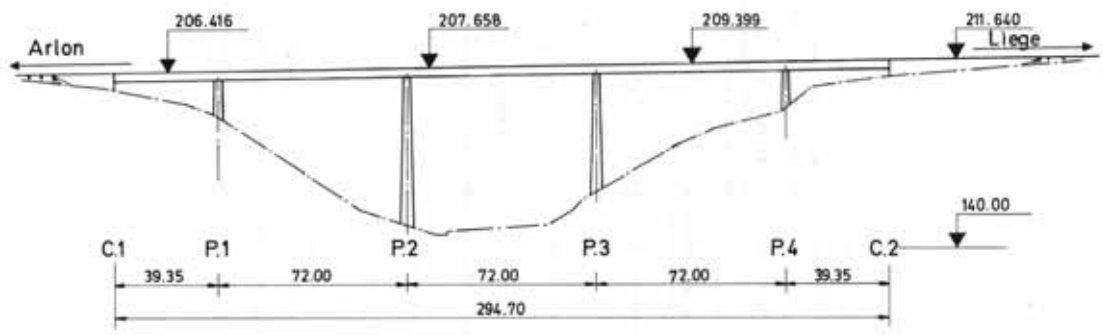

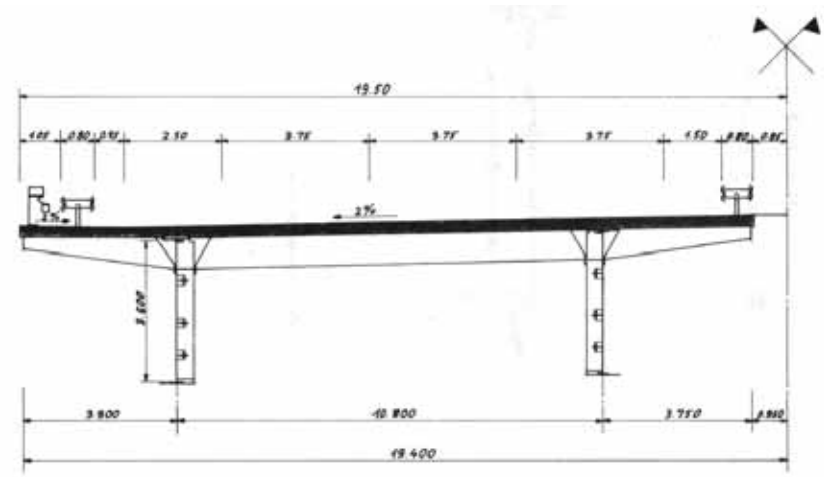

Figure 2-13: The “Secheval” viaduct, Belgium, 1979.

The viaduct of Remouchamps

The viaduct of Remouchamps is a viaduct of the Maastricht-Liège-Arlon E25 (A26) highway just near the viaduct of Secheval. It was constructed during the years 1975-1980. The viaduct of Remouchamps has a total length of 939.10 m with spans respectively of 39.35 m, 94.50 m, 108.00 m, 2 x 117.00 m, 76.50 m, 67.50 m, 72.00 m, 63.00 m, 54.00 m and 44.75 m. The bridge is constituted by two main steel girders with a height of 5.1 m linked with a reinforced concrete slab and truss cross-bracings every 9 m. One peculiarity of this bridge is that it is curved, with a maximal transversal slope of 3 %.

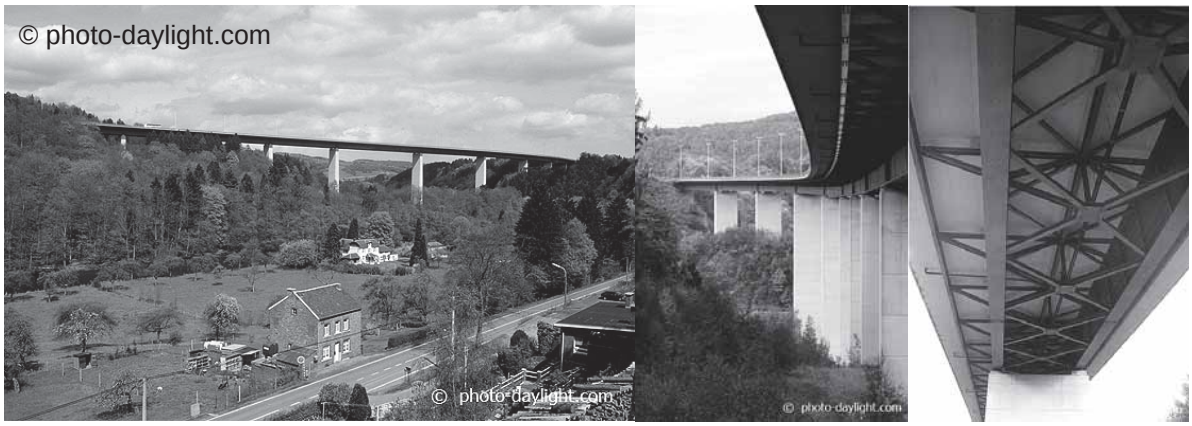

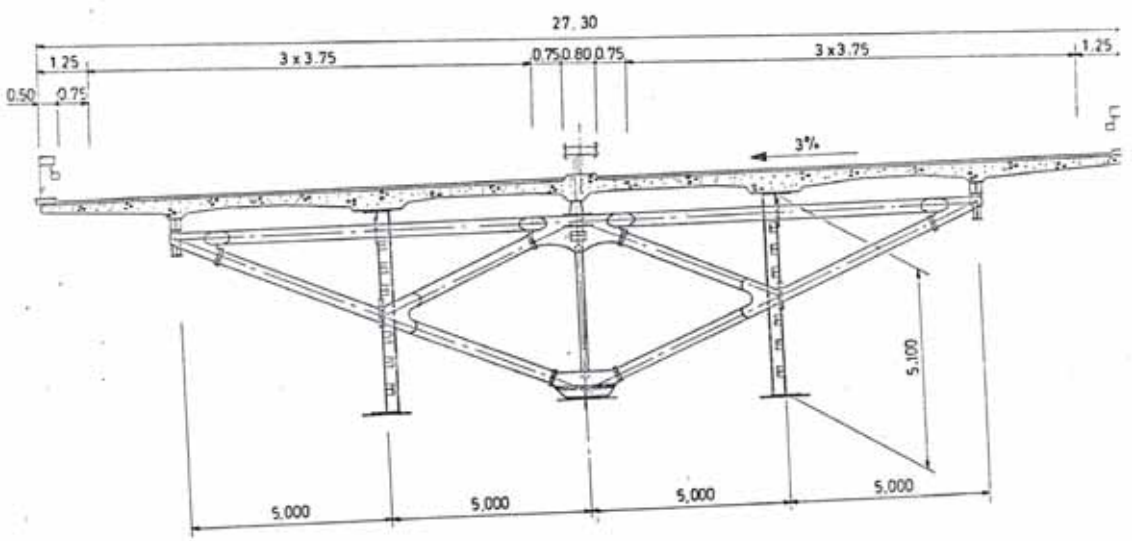

Figure 2-14: The viaduct of Remouchamps, Belgium, 1980.

The “Croupets du Moulin” viaduct

The viaduct of "Croupets du Moulin" at Sart is a viaduct of the Verviers-Prüm E42 (A26) highway. It was constructed approximately during the years 1975-1979. Its design is similar to the "Secheval" viaduct described previously.

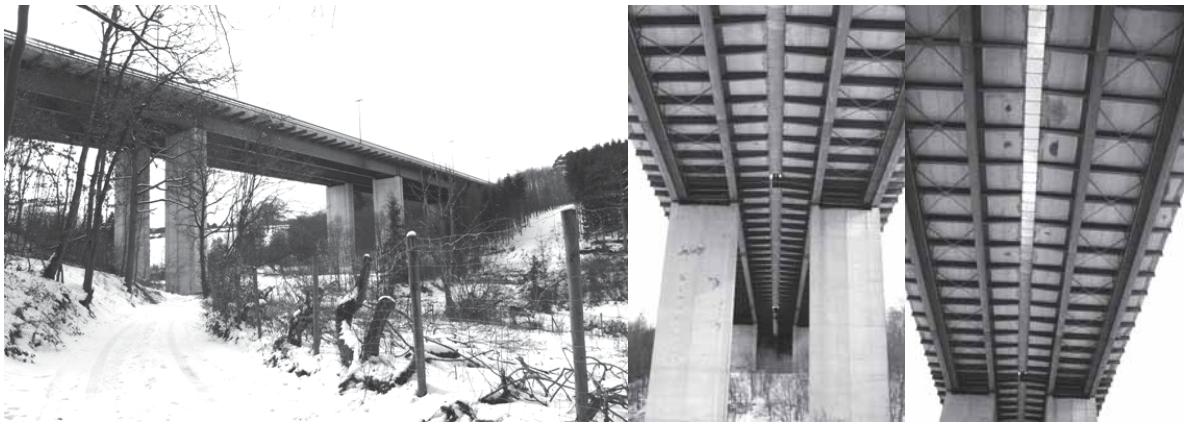

Figure 2-15: The “Croupets du Moulin” viaduct near Sart, Belgium, 1979.

2.2.4.2 Composite box-girder bridges

The viaduct of Polleur

The viaduct of Polleur is a viaduct of the Verviers-Prüm E42 (A27) highway. It was constructed approximately during the years 1975-1979. The viaduct of Polleur has a total length of 463.9 m with spans respectively of 93.35 m, 118.8 m, 2 x 93.6 m and 64.55 m. The bridge is a composite steel/light-concrete box-girder bridge with inclined webs (5.2 m high) linked by a light-concrete reinforced slab with a thickness that varies from 30 cm to 60 cm. The box comprises truss diaphragms every 3.6 m. Its maximal longitudinal slope is equal to 6 %.

Figure 2-16: The viaduct of Polleur, Belgium.

2.3 France

2.3.1 Introduction

The success of composite bridges in France begins during the early 1980s and coincides with the publication of new French design rules in 1981. This success has not been denied since then.

Considering all the new bridges built in France in 2004, the distributions presented in Figure 2-17 can be drawn. The percentages concern 52 new railway bridges and 282 new road bridges (for main roads, except highways). It is shown that the solution of a steel or composite bridge (including filler beam

deck) is quite often used for railway bridges, but represents only 16% of the new road bridges. In fact these distributions include the very small bridges (for instance, frames) which are very numerous, mainly in reinforced concrete, and not so important from an economical point of view. That is why it makes more sense to study the distribution of bridges according to the main span length. Figure 2-18 shows that for spans between 40 m and 80 m, the twin-girder composite bridge is a very competitive solution. For greater spans the new bridges are not enough numerous to justify statistical analysis, but it can be remarked that the composite solution remains even competitive up to 130-m-long span.

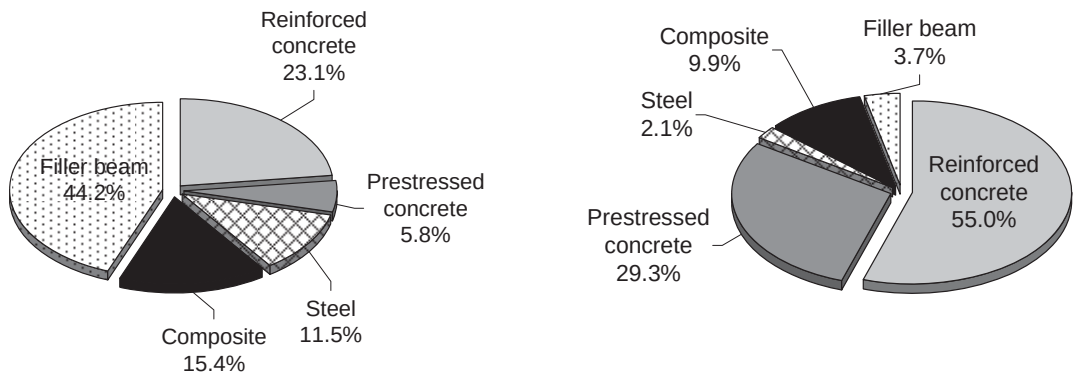

a) Railway bridges (52 new bridges in 2004) b) Road bridges (282 new bridges in 2004)

Figure 2-17: Distribution of the French new bridges in 2004 according to the type of structure.

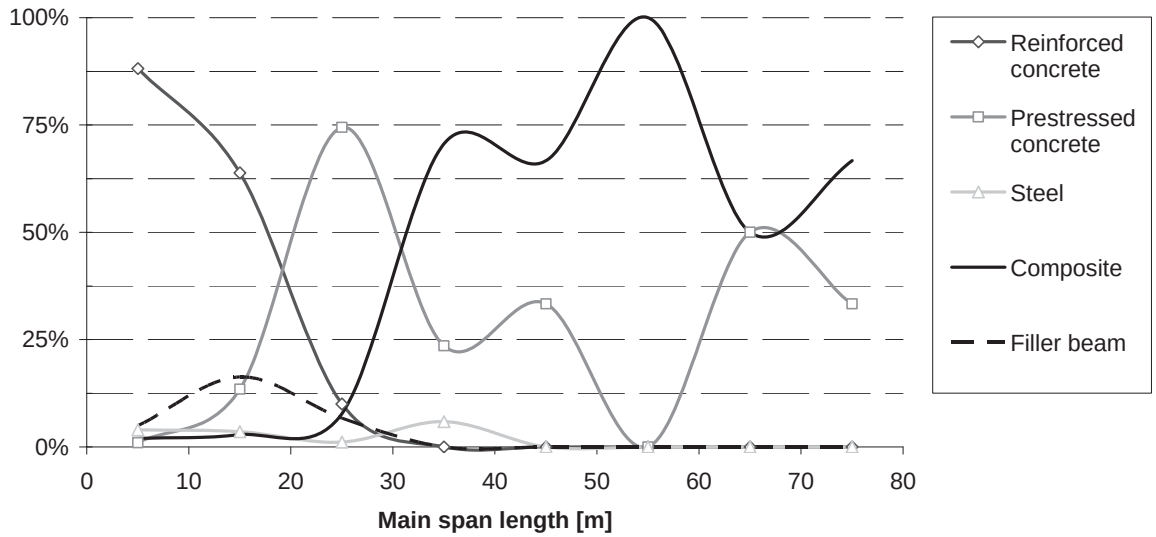

Figure 2-18: Distribution of the French new (railway and road) bridges in 2004 according to the main span length.

On the 10 000 km of roads which are managed by the French National Road Authority, the bridges are classified between small and large bridges (i.e. main span greater than 40 m, or total deck surface greater than 1200 m²). These large bridges represent 10 to 15% of all the new bridges built every year, and 50% of the total new deck surface, with an average price of 1600 €/m² (in 2005). Nearly all the corresponding 30 new large bridges per year have a steel or composite structure (whereas 30 years ago, the situation was opposite with nearly all new large bridges in concrete).

This trend in materials is also observed for railway bridges. For instance, have a look at the history of the high speed railway lines since 25 years:

south TGV line (Paris to Lyon, built in 1983) and west TGV line (Paris to Le Mans, 1990): no steel bridge

- north TGV line (Paris to Lille, 1993): 13 000 tons of steel used for bridges (for 3600 m of the line)
- south TGV line (Lyon to Marseille, 2001): 42 500 tons (for 9500 m)

- east TGV line (Paris to Nancy, 2007): all the large bridges are composite, 26 300 tons (for 5790 m)

2.3.2 Types of composite bridges in France

2.3.2.1 General

The majority of the large composite new bridges are twin-girder bridges with an upper reinforced concrete slab. For instance, for the medium and large bridges, the east TGV line (300 km) has 20 composite bridges among which 13 twin-girder bridges, 4 trough composite bridges, two multi-girders bridges, and one double box-girder bridge. The main reasons for the success of this two-girder design are the minimising of the fabrication costs and of the construction time.

2.3.2.2 Twin-girder bridges

The most common type of structure consists of a reinforced concrete slab poured in-situ and connected by studs (or angles) to the two main I-girders. These I-girders are cross-braced by transverse beams every 6 to 10 m, see Figure 2-19.

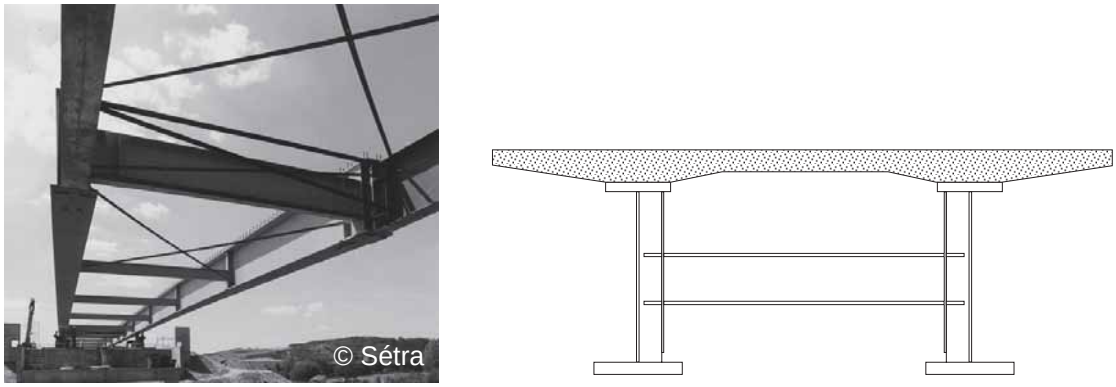

Figure 2-19: Usual transverse cross-sections of a composite twin-girder bridge.

There are a large number of variations from Figure 2-19, the main ones are:

- Slab of constant depth
- Slab with transverse prestressing which can be used for wide bridges (example: "Charles de Gaulle" bridge in Paris, in 1996).
- Slab connected to the cross bracing. In this case, the composite cross-girders are welded to the upper surface of the main girders. The cross-girders are also more closely spaced as their centre-to-centre distance is reduced to about 4 m in order to support a thinner slab (25 cm deep). The upper flange of the cross-girder is butt-welded to the main girder flanges.
- Flat steel vertical stiffener used in low height short span bridges
- Cross-girders extending under the cantilever parts of the deck. See Figure 2-1 and Figure 2-20.

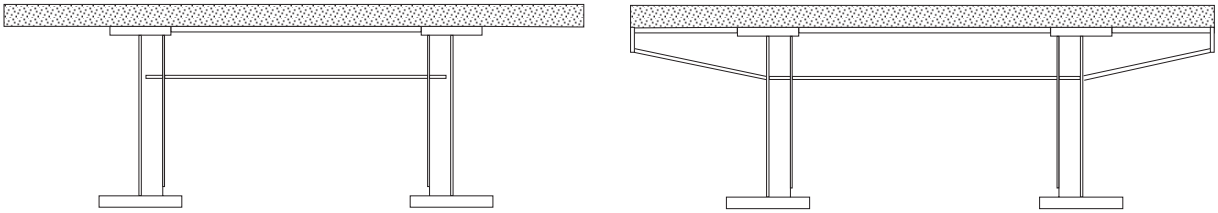

Figure 2-20: Transverse cross girders supporting the slab.

When concreting the slab in-situ, a sequence of construction of the different slab segments is usually defined. In order to minimise the tension in the concrete around the internal supports, the corresponding slab segments are concreted at the end. See Figure 2-21. If the closest concrete plant is too far from the site or if the needed concrete volume is too small for justifying a concrete plant directly on site, the design is performed with prefabricated slab segments. They are connected to the structural part in a second phase by concreting rectangular openings and transverse joints. The studs can be welded in the workshop or directly on site using a specific gun. See Figure 2-22.

Figure 2-21: Concreting on internal supports at the end.

Figure 2-22: Use of prefabricated slab segments.

A halfway solution (rather used for bridges with multiple girders) consists in using very thin concrete pre-slabs laid between the steel girders and used as a formwork for concreting the rest of the slab in-situ. See Figure 2-23.

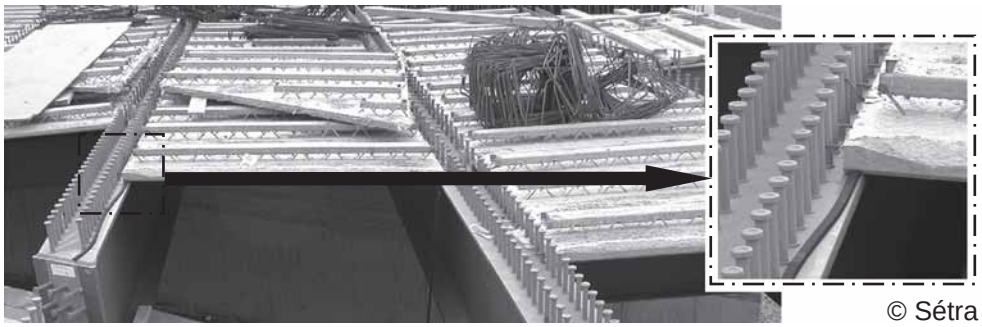

Figure 2-23: Use of pre-slab as formwork.

For railway bridges, a specific transverse diaphragm is usually used to have a better behaviour for torsion. See also Section 6 for further details and Figure 6-4.

Discussions of the design from the economical point of view

The fabrication of the steel structure of a twin-girder bridge can be broken up into 4 steps : the supplying of the workshop with the steel plates coming from the steel mill, the partial assembling made in the workshop, the transport from the workshop to the site and the final assembling on site. Each step imposes conditions which influence the composite bridge design and the competitiveness of the chosen solution.

For being economical the steel plates should be ordered to the ironworks with respect to :

- the ironworks capacity : maximum thickness, length width or weight per plate.
- For instance, if the plate weight exceeds around 23 tons, the production process changes (from continuous slab casting to top casting) and the price increases (+ 80 €/ton).
- the capacity of the transport by rail : maximum length and width
- the optimisation for cutting the maximum different plate elements (in the workshop before welding) out of the same rectangular mother plate and with the minimum off cuts.

For a twin-girder bridge with the usual cross-bracing from Figure 2-19, the construction time in the workshop can be broken up into the percentages indicated in the table below. It results in highlighting the high time costs induced by the stiffening in comparison to the implemented steel weight. It should be mentioned that the built-up of the I-girders can be automated (up to a depth equal to 5750 mm) which is not the case of the stiffening, see Figure 2-24. The girder handling (for instance turning down before welding on the other side) still remains one of the most time consuming part of the work.

Table 2-1: Indication for construction times of a twin-girder bridge.

Steps	Time consumption	Weight
Fabrication of the main girders		
• Cutting the plate elements	10 %	
• Butt welding	11 %	
• Built-up of the I-girder	14 %	85 %
• Stiffening	48 %	6 %
• Studs	4 %	
• Dispatch	5 %	
Fabrication of the cross-bracing	5 %	6 %
Miscellaneous	3 %	3 %

The transport of the I-girder segments from the workshop to the bridge site can be performed by barges, by trains or by trucks, according to the workshop facilities. The kind of transport influences the size of the segments, the splices that have to be welded on site, and eventually the retained solution (I- or box-girders). The table below gives some indications about the transport limitations in France. For instance it results that a box-girder bridge wider than 6 m should be split into two pieces which have to be longitudinally welded on site.

The final assembling on site depends on the clearance of the bridge and the availability of the areas surrounding the abutments. If the clearance is not too high, a construction by crane (or an heavy lift derrick on a barge) can be performed. If not, the bridge should be launched for one (or both) side. A launching platform should be available in the bridge continuation. See Chapter 7 for further details about launching devices and process.

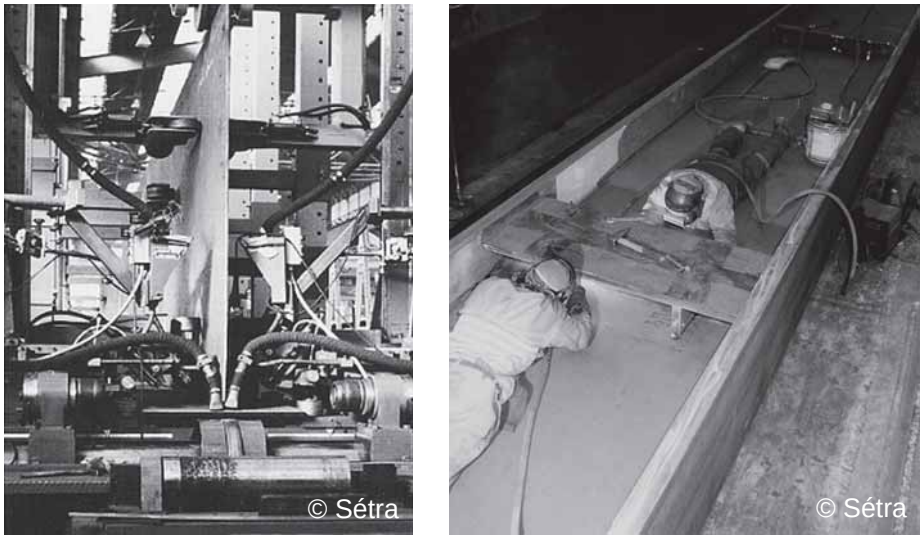

Figure 2-24: Built-up of a bridge I-girder and welding of transverse stiffeners.

Table 2-2: Transport limitations in France.

	By trucks		By rail
	Normal convoy	**Exceptional convoy (with specific authorisations and escort police)**	
Weight	20 tons < p < 30 tons	up to 100 tons	50 tons (up to 70 tons with specific wagons)
Length	22 m	50 m	32 m
Width	4.50 m	6.00 m	3.00 m (and a concomitant depth up to 1.5 m)
Depth	3.20 m	6 m (only on specific itineraries)	3.05 m (and a concomitant width up to 0.8 m)

Examples

La Risle viaduct is a typical twin-girder road bridge built for the highway A28 in Normandy in 2004. General data of La Risle viaduct is as follows:

Bridge data:

Total length = 1320 m

Span distributions = 65 – 4 x 80 – 7 x 90 – 3 x 80 – 65 m

Girder height = 3.5 m with cross-bracing every 8 m

Reinforced concrete slab, 15-m-wide and around 30-cm-deep

5295 tons of steel, built by launching from both abutments

Clearance = 70 m

One lane in each direction with a central separator

Figure 2-25: La Risle viaduct near Brionne, France, 2004.

A new road composite viaduct is under construction in Avignon (south of France). The structure is a twin-girder bridge with a wide concrete slab supporting 2 x 2 traffic lanes. The two girders are cross-braced with I-girders connected to the slab and extending over the cantilever parts. General data is as follows:

Bridge data:

Total length = 740 m

Span distributions = 36 – 60 – 64 – 80 – 84 - 4 x 88 – 64 m

Girder height = 3.5 m with a clear transverse distance of 12 m between the main girders

Cross-bracing every 4 m

Reinforced concrete slab, 21.5-m-wide and 24-cm-deep

4500 tons of steel (S355 + S460), built by launching

Figure 2-26: LEO viaduct over Durance near Avignon, France, 2008.

This bridge has been designed using Eurocodes (EN final versions). For a 33-m-long zone of the main steel girders surrounding each internal support, the steel grade S460 has been used for the flanges. Compared to a design made of S355 only, the used steel weight is reduced by 8%.

The last example mentioned here is one of the composite railway bridges built for the new East TGV line in 2007: the viaduct over the Ourcq valley. This example is representative for the specific cross-bracing design generally used for railway bridge (steel diaphragm). The lower steel flanges are also braced with prefabricated slab segments for reducing the noise induced by the TGVs, for a better dynamic behaviour of the deck and for a better torsion behaviour.

Bridge data:

Total length = 450 m

Span distributions = 45 – 6 x 60 – 45 m

Girder height = 3.9 m

Cross-bracing made of diaphragms every 4 m

Upper reinforced concrete slab, 12.6-m-wide and from 25-cm to 40-cm-deep, poured in-situ

1963 tons of S355, built by launching (with the lower concrete slab)

See also Figure 6-4 for further details.

Figure 2-27: Viaduct over Ourcq valley, France, 2006.

2.3.2.3 Examples of composite box-girder bridges

The Verrières viaduct is a composite box-girder bridge for the highway A75 near Millau. The central steel box is closed and its upper flange is connected to the concrete slab. The wide slab supports 2 x 2 traffic lanes. Cross-bracing connected to the slab, steel diagonals and a longitudinal beam help to support the cantilever part of the slab, see Figure 2-2.

Bridge data:

Total length = 719.5 m

Span distributions: 96 – 136 – 144 – 136 – 128 - 80 m

Girder height = 4.5 m

Box-girder with vertical webs (spacing = 7 m)

Cross-bracing every 4 m

Reinforced concrete slab, 23.5-m-wide

6226 tons of steel

Longitudinal splice for assembling two half box-girders

Built by launching

2261 €/m² (2002)

Figure 2-28: Verrières viaduct near Millau, France, 2002.

Of course, for the same highway, the steel box-girder of the Millau viaduct (built in 2004) can also be mentioned, see Figure 4-3. Another remarkable recent example is the Jaulny viaduct for the East TGV line (2005). The structure is a double closed box-girder bridge with a main span of 73.80 m for a total length of 478.70 m. The average depth of the steel box sections is 3.60 m, the flange stiffeners are trapezoidal closed profile whereas the web stiffeners are flat strips.

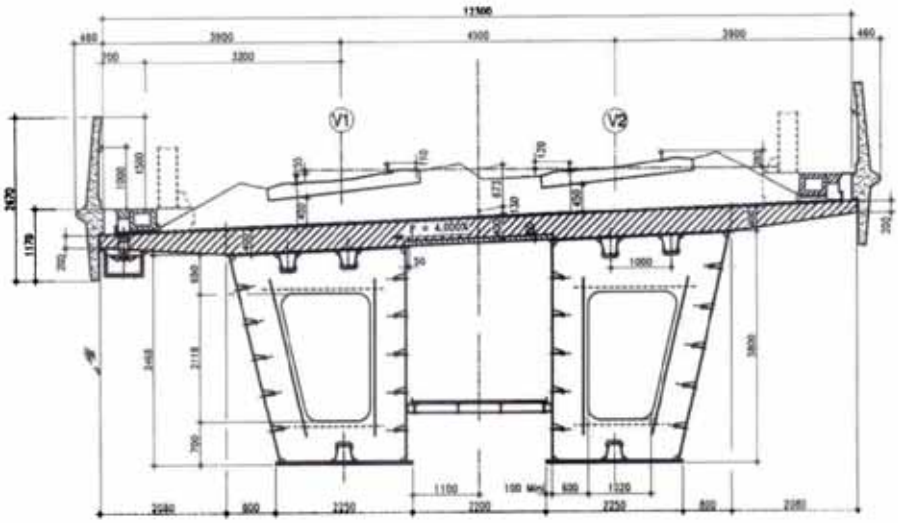

Figure 2-29: Jaulny railway viaduct, France, 2005.

2.4 Germany

2.4.1 Introduction

In Germany a successful rise of the construction of steel-concrete composite bridge structures started in the 1990s which is linked closely to a new political situation: the German reunification. At that time, the infrastructure in Eastern Germany was in a very bad condition and the objective was to rebuild it as fast as possible. During the conceptual design phase, innovative designs were developed e.g. in order to reuse the existing foundations and substructures which were - in contrast to the superstructures - in a rather good condition. As a result, the use of lightweight superstructures was often required, which is a domain of the composite structures. The traditional design approach for long-span (motorway) bridges is to have separate superstructures for each carriageway which are often built up from I- or box-girders. As example, bridges near Cottbus and Schrotetal are shown in Figure 2-30 and Figure 2-31 which used to be the main bridge types in Germany until the end of the 1990s.

Figure 2-30: River bridge Spree near Cottbus, Germany, 1994 [10].

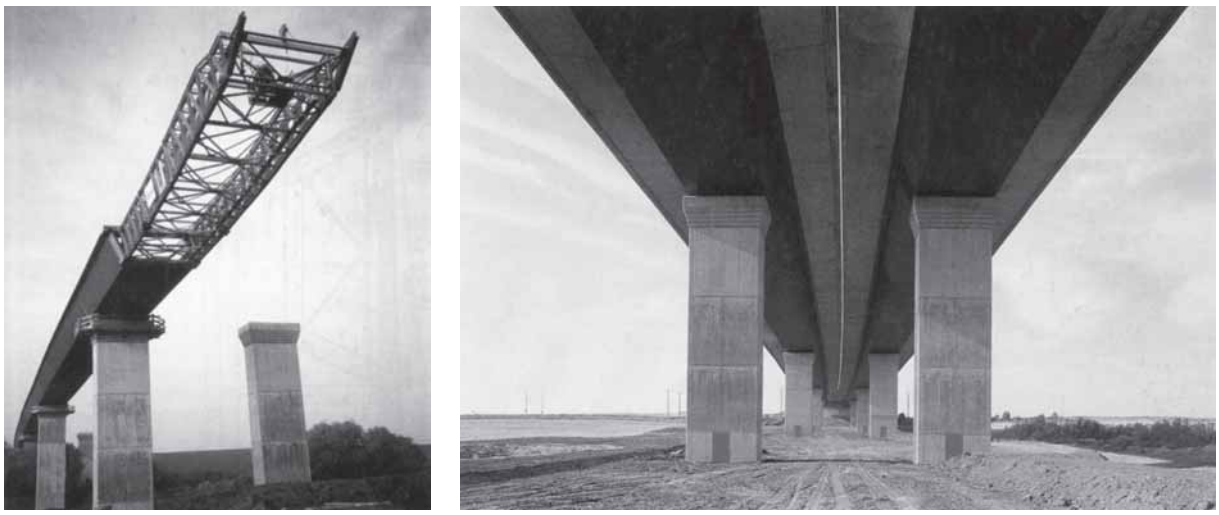

Figure 2-31: Bridge Schrotetal near Magdeburg, Germany, 1997 [10].

However, the fast reconstruction of the infrastructure in Eastern Germany led to the development of advanced design approaches on which in the following sections the focus is set. The bridge types which were able to establish themselves since then are:

- Bridges with a one-piece composite superstructure, cf. Section 2.4.2
- Bridges with airtight small-sized box-girders, cf. Section 2.4.3
- Bridges with prefabricated components and in-situ concrete, cf. Section 2.4.4

In Germany a dense infrastructure network exists with over 231,000 km of roads and approximately 34,000 km of railway lines. The length of federal highways is 53,346 km (motorways: 12,363 km, national roads: 40,983 km) [4] and the operated railway line length is 33,897 km [20]. The number of bridges adds to 35,675 for federal highways [84] and 27,165 for railways [20]. Data on state and district roads is not centrally recorded so that in the following only information on federal highways can be given.

Figure 2-32 shows the number of bridges with regard to bridge length for road bridges and span length for railway bridges. For road bridges, an evaluation of the database based on the span length is not possible so that only the bridge length is referred here. However, in both cases it can be seen that bridges in the small and medium span range dominate. Usually, the roads consist of two lanes in each direction leading to bridges with total widths between 15.5 and 29.5 m depending on the type of superstructure, two-piece or one piece.

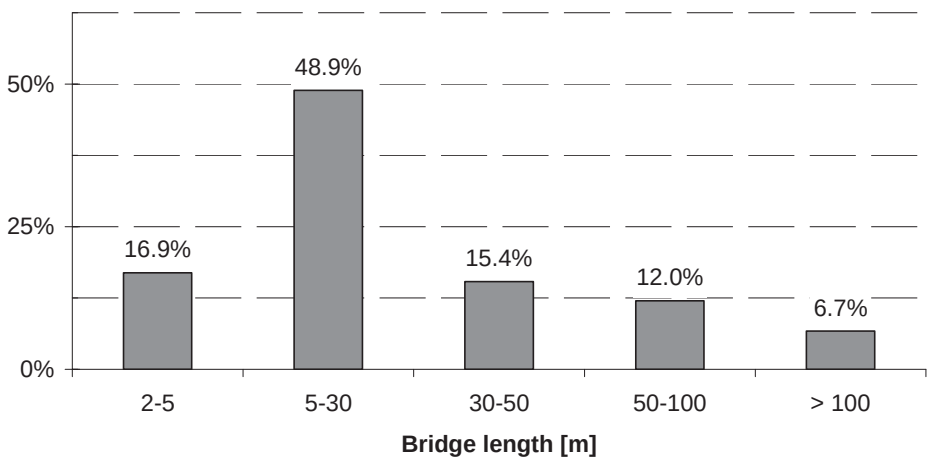

a) Road bridges (federal highways) [84].

Figure 2-32: Distribution of span and bridge lengths in Germany [84], [87].

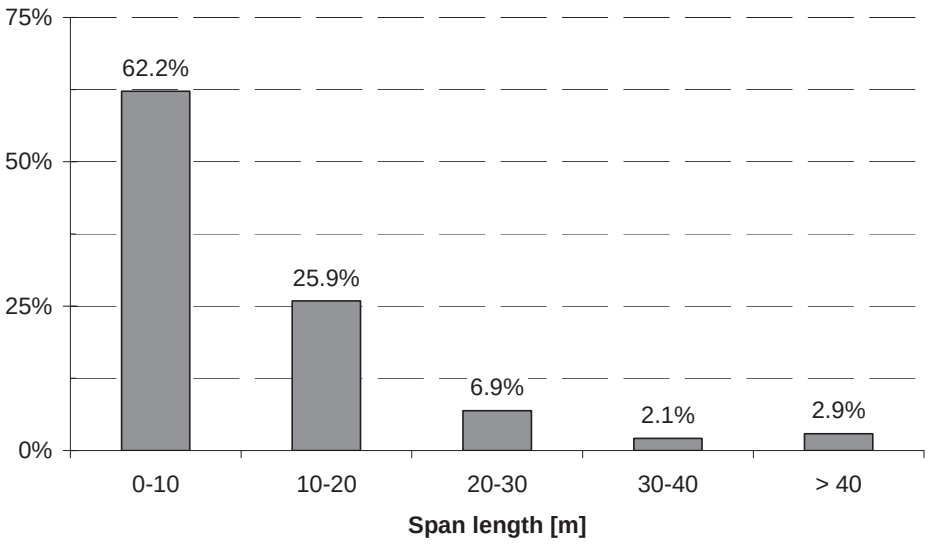

b) Railway bridges [87].

Figure 2-32 (continued): Distribution of span and bridge lengths in Germany [84], [87].

An analysis of the existing bridge types in Germany shows that especially for road bridges the market has been dominated by concrete bridges, cf. Figure 2-33. In contrast to this, the bridge types for railway bridges are more balanced but in both cases it is obvious that steel-concrete composite bridges played only a minor role so far.

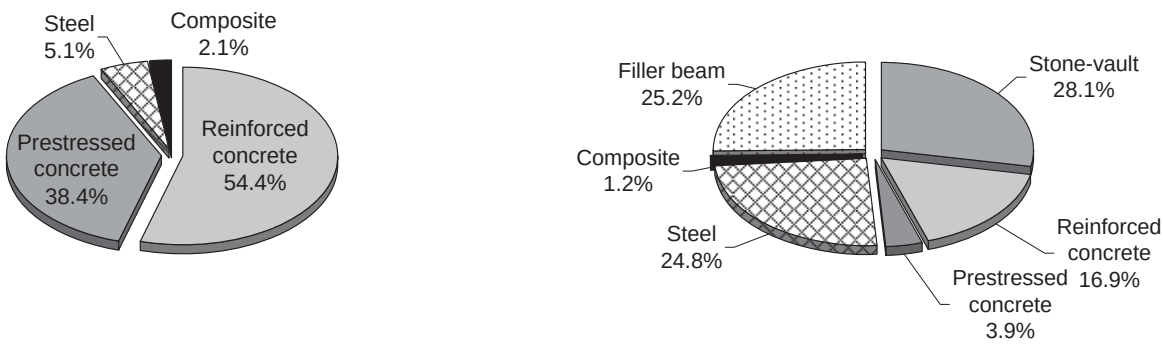

a) Road bridges (federal highways) [84]. b) Railway bridges [87].

Figure 2-33: Distribution of existing bridge types in Germany.

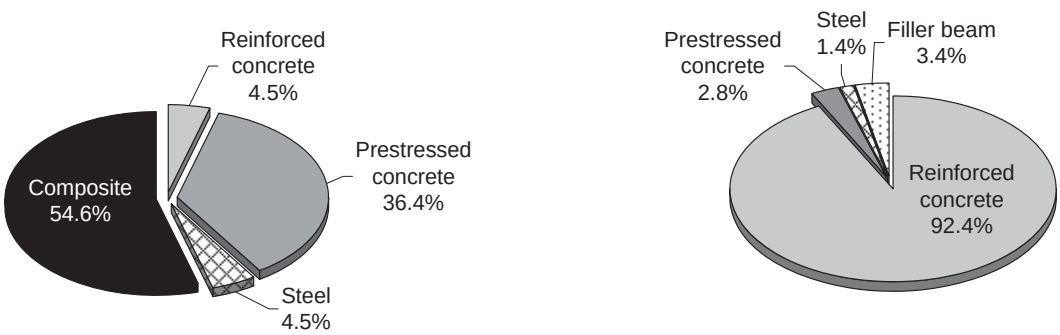

a) Road bridges (federal highways), Bridge lengths referenced between 30 and 60 m. b) Railway bridges.

Figure 2-34: Distribution of current construction types in Germany [84].

Current construction types, see Figure 2-34, show that the composite bridges have gained a good market share at least for road bridges. Reasons for this are given in the following sections.

2.4.2 Bridges with a one-piece composite superstructure

2.4.2.1 General

Until 1997 the former German Federal Ministry of Transport, Building and Housings (BMVBW) required to design separate superstructures for each carriageway for motorway bridges made of concrete and steel-concrete in order to be able to sustain the traffic during maintenance operations. This was mainly related to necessary repairs of the concrete slab so that steel bridges with orthotropic decks were excluded from this requirement from the beginning. However, in 1997 the BMVBW decided to allow one-piece superstructures for steel-concrete composite bridges for several reasons. In the following general part, reasons for and characteristics of one-piece composite superstructures are given. In Section 2.4.2.2 the implications of different cross-sectional layouts are discussed in detail with regard to structural and fabrication-related aspects (see also e.g. [19]).

Starting point to mitigate the requirement of building two separate superstructures was the development of motorways in the newly-formed German states after the reunification. Especially in Thuringia a large number of deep valleys needed to be crossed and the objective was to encourage economic bridge designs with a high aesthetical quality. Depending on the boundary conditions these criteria could be fulfilled very well by one-piece composite superstructures due to the following reasons:

- **Number of piers.** With a one-piece superstructure the number of piers can be reduced by half in comparison with separated superstructures. As a result, the perspective of the valley is not as severely obstructed as if two parallel rows of piers are required and also the costs for piers and foundations are reduced. In case of one-piece superstructures, a monetary breakeven is reached for pier heights starting at 40 to 50 m and higher, cf. [41].
- **Durability.** In comparison with a pure concrete bridge the durability of the composite bridges is higher because a renewal of the corrosion protection as well as replacement of the wearing part “concrete slab” is possible. A prerequisite for the latter is that the replacement can take place under traffic and that the resulting load effects are already considered at the design stage, which has also influence on the characteristics of the bridge as described later on. The design for a replacement of the concrete slab is decisive for the design of the superstructure so that it is over-designed for the serviceability limit state which in turn, however, leads to an expected robust and durable structure without endangering its competitiveness. The general design considerations lead to certain characteristics of one-piece composite superstructures which are introduced below. Figure 2-35 shows a typical layout of a one-piece composite superstructure.
- **Cantilevering concrete slab.** The wide concrete slab usually without pretensioning carries both carriageways. Due to its width the slab is usually supported longitudinally at five locations in the transverse direction. Two of them are the upper flanges of the box-girder which are complemented by longitudinal beams in the middle and on the outside. The outer beams are supported by lateral struts.
- **Single steel box-girder with inclined struts and tension band.** The steel box usually has a wide bottom plate with inclined webs. The cantilevering concrete slab is supported by lateral struts which often consist of hollow cross sections. In general, outer edge beams and a middle beam are foreseen in the longitudinal direction. The deviating forces of the lateral struts are counteracted by tension bands at the level of the upper flanges. These tension bands are usually connected to the concrete slab by studs. The cross-bracings and inclined struts are arranged with a distance between 4 to 5 m in a regular pattern.
- **Replaceability of the concrete slab.** It is a requirement that the concrete slab can be replaced under traffic on the bridge. This means that the traffic is running on one side of the bridge only, whereas on the other side the slab is removed in section of 10 to 15 m in the longitudinal direction. In the transverse direction it is also possible to remove the slab not as one piece per each side but to subdivide it here as well. As the traffic load itself gives a high torsional

moment to the bridge girder, counter weights should be used to reduce this effect. The replacement of the concrete slab has to be already considered as a load case during the design of the bridge. The proposed procedure of replacement has to be sufficiently well documented.

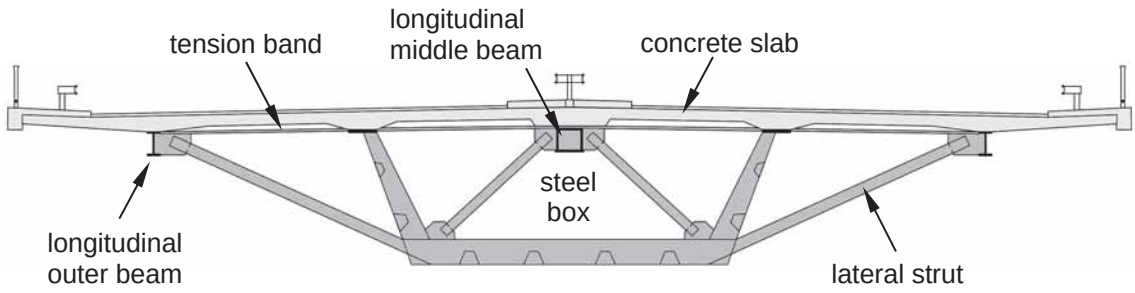

Figure 2-35: Layout of a one-piece composite superstructure.

Table 2-3 summarises the data of bridges with a one-piece composite superstructure, which have been completed in Germany up to now. The costs indicated refer to the time of construction.

2.4.2.2 Influence of the cross-sectional layout

In the following implications of the choice of different cross-sectional layouts are given, which concern mainly the steel structure. The following topics are discussed:

- Longitudinal middle and outer beams
- Tension band
- Concrete slab
- Influence of the cross-sectional layout on the fabrication of the concrete slab.

Longitudinal middle and outer beams

Longitudinal middle and outer beams are typically chosen because the construction phase is simplified. The longitudinal beams e.g. often serve as runways for the formwork carriages. Besides that, in the final stage, longitudinal beams avoid a point-support of the slab because a biaxial tensile state of stress is not covered by the codes so that no experiences with regard to robustness and fatigue exist. If a middle beam is chosen, it is often a closed cross-section in order to cope with the torsional stresses which are induced by a possible replacement of the concrete slab. In case of a closed cross-section it is a airtight section. However, longitudinal outer beams are not a necessary requirement as the bridge examples *Reichenbach*, *Steinbachtal* and *Nesenbachtal* show.

Tension band

There are different possibilities where to place the tension band.

For a tension band in the concrete slab, the surrounding concrete offers some protection, however, special care has to be taken in case of a decomposition of the concrete slab. Moreover, local load effects of the slab have to be considered in their design. The connection to introduce the tensile forces into the cross-bracings is usually rather complicated.

For a tension band underneath and connected to the concrete slab, a grid-like action can be accounted for the support of the concrete slab which may result in a smaller slab thickness. The tension band acts like a concrete beam with outside reinforcement. Due to this, it has to be taken into account that the studs will also get some tension because they act like a stirrup.

Table 2-3: Data of bridges with a one-piece composite superstructure in Germany.

Bridge	Year of com-pletion	Total length	Spans	Max. Height	Deck area	Superstructure						Costs
						Concrete		Reinforcing / prestressing steel		Constructional steel		
		[m]	[m]	[m]	[m^2]	[m^3]	[m^3/m^2]	[t]	[kg/m^2]	[t]	[kg/m^2]	[€/m^2]
Wilde Gera	2001	552	30-42	110	14,628	4,630	0.317	895	61	2,508	172	1,425
Albrechtsgraben	2002	770	45-70	80	21,945	8,500	0.387	1,500	68	5,100	232	1,267
Reichenbach	2002	1,000	40-105	60	28,500	9,700	0.340	2,144	75	6,323	222	1,140
Schwarza	2002	675	55-85	68	19,238	6,450	0.335	1,700	88	4,428	230	1,138
Seßlestal	2002	320	73-88	53	9,120	3,300	0.362	800	88	2,521	276	1,349
Steinbachtal	2002	372	48-78	30	10,974	n.a.	n.a.	n.a.	n.a.	n.a.	n.a.	n.a.
Dambachtal	2005	370	45-85	65	10,545	4,400	0.417	1,000	95	2,800	266	1,166
Elben	2005	432	40-80	52	12,312	4,545	0.369	870	71	2,950	240	1,218
Thyratal	2005	1,115	70-90	40	32,893	12,300	0.374	2,550	78	8,300	252	1,216
Haseltal	2006	845	70-175	82	24,083	10,200	0.423	2,400	100	9,400	390	1,428

For a tension band underneath the concrete slab with a certain distance, the structural system is clearly divided in the longitudinal and in the transverse direction. A disadvantage is the offset at the joint to the slab which causes local bending. Due to different thermal expansion of the slab and the tension band tensile stresses may occur in the slab, which has to be considered when reinforcing the slab.

Concrete slab

The concrete slab usually consists of reinforced concrete without pretensioning, which is erected with the back-step method. The layout of the concrete slab can be as follows:

- Slab with a constant thickness, e.g. valley bridge *Albrechtsgraben*
- Slab with haunches at the outer longitudinal beams and the upper flanges of the box-girder
- Coffered slab which reduces the amount of concrete and thus the selfweight of the bridge is also reduced. However, the layout of the reinforcement becomes more complex

As said in the introduction, it is required that the concrete slab can be replaced under traffic on the bridge. As the traffic load itself gives a high torsional moment to the bridge girder it is recommended to use ballast weights to reduce this effect. In addition to that, joints at the gusset plates for the horizontal bracings in case of a slab exchange have to be foreseen as shown in Figure 2-36. Other design aspects may include e.g. that the end cross girder is made of concrete in order to avoid lifting forces when removing the concrete slab in the end span.

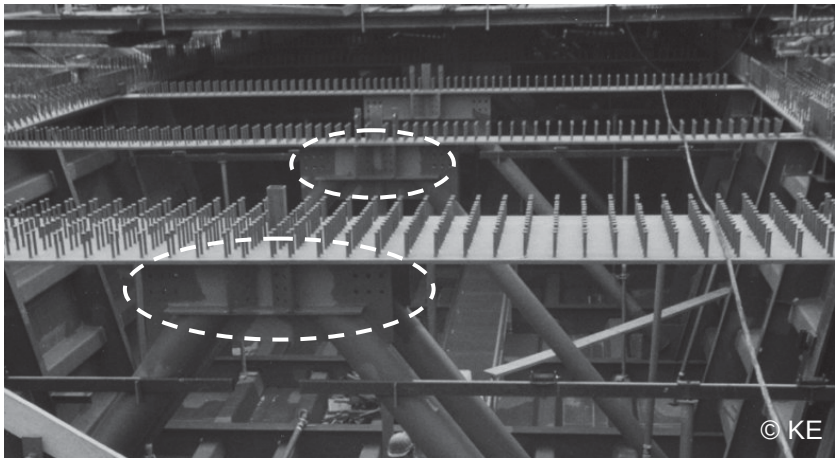

Figure 2-36: Joints foreseen to take the horizontal bracings in case of slab exchange.

Influence of the cross-sectional layout on the fabrication of the concrete slab

When several concreting steps are foreseen for the casting of the concrete slab a formwork carriage is usually used, which has the task to resist all loads of the formwork, the fresh concrete and other working loads. For the formwork and its carriage the following general characteristics apply:

- No ground-based falsework is possible so that the loads have to be introduced adequately into the steel superstructure
- Easy to move taking into account the pass-by at the lateral struts
- Only few available support locations
- Compatibility of superstructure stiffness and falsework stiffness
- Lightweight
- Cost-efficient

Based on these requirements different layouts of the formwork carriage exist, which are dependent on the cross-sectional layout. In the following formwork carriages “running on top” or “running underneath” are presented.

Formwork carriages "running on top"

For formwork carriages running on top, stands are necessary to introduce the loads into the steel superstructure. These stands are possible at a maximum of five locations in the axis of the cross-bracings and struts in the transverse direction to be able to carry also horizontal forces into the superstructure. Moreover, the stands need recesses in the concrete slab. After the casting procedure the stands are cut below the slab's surface and the recess is closed afterwards. These recesses are rather undesirable because the quality of the slab suffers and also the layout of the reinforcement is complicated in this area. It has to be considered that the steel superstructure has to be designed for these concentrated high forces especially if the number of stands is reduced as far as possible. It has also to be taken into account that the formwork has to pass by the outer inclined struts. A separate formwork inside the box-girder is commonly provided which can be lifted or lowered independently from the outer formwork.

For the valley bridge *Reichenbach* all five possible locations for stands in the transverse direction have been used. In Figure 2-37 these stands are shown. It can be seen that outer longitudinal beams do not exist. As a result the formwork of the slab area above the outer inclined struts and the cantilevering part was provided by foldable formwork panels which were hooked on the outer edge of the formwork carriage. The formwork of the slab area inside the box-girder was provided by formwork panels travelling inside the box [70].

Figure 2-37: Small stands as support for formwork carriages "running on top", valley bridge Reichenbach near Ilmenau, Germany, 2002.

For the valley bridge *Wilde Gera* the number of stands in the transverse direction was reduced to two, which are located at the joint of outer inclined struts, tension band and outer longitudinal beam. As a result the recesses in the concrete slab could be reduced and thus the quality of the slab was improved. For the cantilevering slab area foldable formwork panels were used, which were hung from the formwork carriage. The formwork of the areas between the inclined struts were provided by formwork panels, which were supported on temporary brackets located at the struts and the cross-bracings of the steel box as shown in Figure 2-38 and [18].

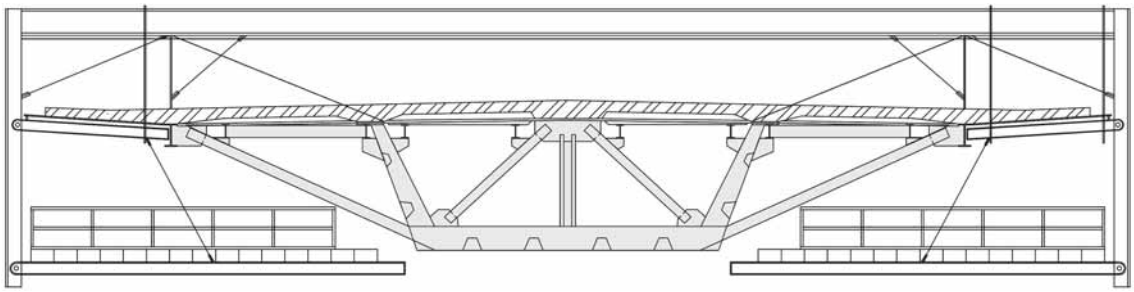

Figure 2-38: Example of a formwork carriage "running on top".

Formwork carriages running underneath

If an outer continuous longitudinal beam exists it is advantageous to have a formwork carriage attached to this beam, which is running underneath. Besides the longitudinal beams it is laterally supported by the lower flanges of the steel box. As a result no recesses in the concrete slab are required for the stands of the formwork carriage. Although this leads to higher quality of the concrete slab, maybe additional mounting parts and strengthening methods are necessary for the steel parts. Special care should be taken of the corrosion protection.

For a number of valley bridges a formwork carriage running underneath was used, which was attached to the outer longitudinal beams. Usually foldable formwork panels are used, which are connected to carriages, hanging and travelling only on the lower flanges of the outer longitudinal beam. During casting of the concrete, the formwork carriages are supported by the outstand of the bottom plate as well. Inside the steel box formwork panels are used similar to formwork systems used with formwork carriages running on top. Figure 2-39 shows the formwork carriage of the valley bridge *Schwarza*. This method has also been used e.g. for the valley bridges *Albrechtsgraben* and *Elben*.

Figure 2-39: Foldable formwork panels, valley bridge Schwarza, Germany, 2002.

Figure 2-40: Valley bridge Nesenbachtal, Stuttgart, Germany, 2000.

Use of partial depth precast composite slabs

Instead of in-situ cast concrete for the slab, an alternative solution is to use precast composite slabs, which are placed on the steel structure and covered by a layer of in-situ cast concrete. An example for such a solution is the bridge Nesenbachtal [6] as shown in Figure 2-40. Although it carries only one carriageway comprising of two lanes it has the same characteristics as the one-piece composite superstructures: it is a single steel box-girder with diagonally inclined struts and a tension band. The concrete slab is built up with precast concrete components, which are placed on the transverse girder at a distance of 4 m. Measurements showed that the precast concrete components are able to form a stable unit with the in-situ concrete parts [48].

2.4.3 Bridges with airtight small-size box-girders

Since the mid-1990s bridges with small-size box-girders, which were airtight without corrosion-protection in the inside started to spread all over Germany. This design was able to compete against other types of composite and concrete structures in the span range between 30 to 80 m. A typical cross-section consists of two main girders running in the longitudinal direction as shown in Figure 2-41.

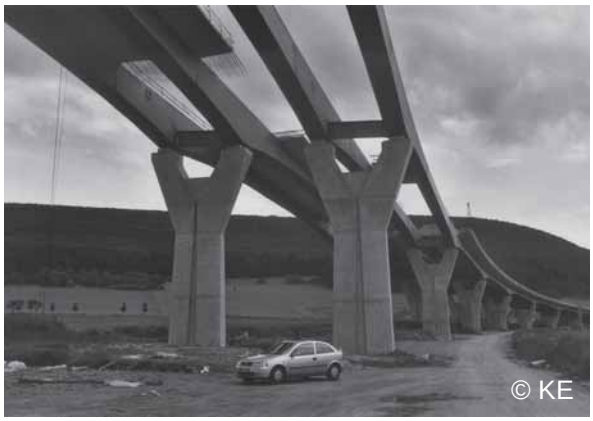

a) Bridge Werratal near Einhausen, Germany, 2003.

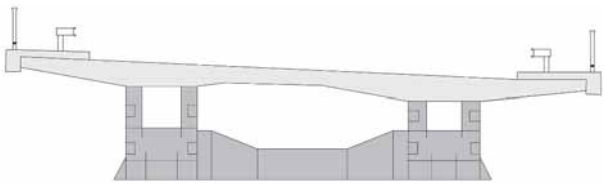

b) Typical cross-section with a cross girder.

Figure 2-41: Bridges with airtight small-size box-girders.

Originally strong doubts existed against airtight box-girders and the effectiveness of the airtightness to function as corrosion protection. However, it was already widely used as inside protection e.g. for inaccessible members of truss and arch systems with box sections as well as stiffeners with a closed section shape. A change in mind came in the mid-1990s when the continuous steel box-girders of the guideway at the Transrapid test facility were made accessible, cf. [83]. These girders were built in 1982 as airtight box-girders with a projected life-time of 12 years only. Their inspection showed that no corrosion had taken place inside the airtight box. Finally, it was given way for a new bridge type, which was further supported by improved manufacturing techniques for the steel parts and advancements in computer technology, which facilitated the calculation of composite structures. A summary of the most important bridges which were published in journals, books, etc. [11], [13], [14], [21], [22] is given in Table 2-4 but many more bridges with airtight small-sized box-girders have been built so far, which were not made known to the public very well.

The characteristics of the airtight box-girders can be summarised as follows, cf. [74]:

- **Support of the concrete slab.** The two webs of each main girder provide a favourable support condition for the concrete slab.
- **Mass.** The small width of the steel bottom plate leads to a larger effective width in the hogging bending moment areas. The close supports of the concrete slabs lead to slabs with a maximum thickness of 35 cm, which is favourable for the overall self-weight of the bridge. A transverse pre-stressing is usually not used.

Table 2-4: Data of bridges with airtight small-sized box-girders in Germany.

Bridge	Year of comple-tion	Total length [m]	Spans [m]	Slab width [m]	No. of girders	Deck area [m²]	Constr. Steel [kg/m²]	Costs [€/m²]
Union	2000	253.7	25-35	19.1	2 x 2	9,704	n.a.	1,106
Werratal	2003	1194.0	37-85	14.25	2 x 2	34,029	n.a.	837
Müglitz	2003	310.0	45-55	14.25	2 x 2	8,835	n.a.	n.a.
Schwentine	2003	296.0	20-52	11.5	2	3,404	241	1,704
Wakenitz	2004	294.5	32-55	14.9	2 x 2	8,781	247	1,651
Seidewitztal	2006	605.0	31-55	12.9	2 x 2	15,609	n.a.	n.a.
Wiedersbach	2006	177.5	30-60	14.25	2 x 2	5,059	217	1,192
Schleuse	2007	680.0	40-80	14.25	2 x 2	19,380	260	1,028

- **Fabrication.** A prefabrication of the box-girders up to maximum transportation lengths is possible so that only splices in the longitudinal direction have to be welded on site. The small dimensions of the box-girders are easy to handle at the workshop but they also lead to difficult welding positions of welds inside the box.
- **Corrosion protection.** In comparison with an I-girder equipped with stiffeners, there are only few and plane outside surfaces in case of the box-girders. Moreover, inside there is no corrosion protection needed at all.
- **Transportation.** The box-girders can be transported whole without the need to be assembled on site in the transverse direction. The high torsional stiffness facilitates the transport.
- **Erection.** The box-girder is stable during erection and final stages due to its high torsional stiffness. Usually the elements are lifted into their final position but also the launching technique can be used as done for the Bridge Seidewitztal [27]. There is not much space to do the welding on site and also the manholes have to be closed in the ends. There are only few areas that need a final painting on the erection site.
- **Erection time.** The crane mounting and easy erection of large prefabricated sections leads to a very short erection time without much influence on the traffic.
- **Equipment.** The equipment of walkable box-girders such as catwalk, lighting, etc. is not required.
- **Maintenance.** Time and effort for maintenance of the steel structure are reduced because only outer surfaces are observed. However, the maintenance of other equipment such as the drainage on the outside requires more effort. Structural elements inside the box-girder are not easily accessible. If an inspection inside the box-girder is necessary rail-bound devices can be used, which have to be considered already at the design stage.

The design of small-size box-girders depends mainly on the slab width and the main span. For small spans the main girders are closely spaced with a distance of 2 to 3 m. In the medium span range the typical construction consists of two main girders, which support slabs with widths between 11 to 16 m. As can be seen from Table 2-4 that this range of slab width is a very common. For larger widths either

more main girders or sometimes struts and cantilever arms are used are used. In this case the use of prefabricated concrete slabs can be favourable [75]. Another not very common solution is the pre-stressing of the slab in the transverse direction, which has been used e.g. for the Union Bridge, Dresden [11]. Besides that the following facts should be kept in mind [72], [73]:

- In Germany the weld specifications of ZTV-ING T4 are sufficient for the manufacturing of airtight cross sections.
- An extra amount in steel thickness to account for corrosion is not required.
- An examination of the airtightness is not necessary.
- A corrosion protection inside the box-girder is not required. Also parts, which are welded on site do not need a protection although quite often a base coating is applied to these parts. The box-girder section does not need to be sealed until erection.
- A load case pressure difference of ±15 K has to be considered. Thus, the closure of the box-girders on site should be done with respect to the assumed temperatures in the calculations.
- Due to the width of the upper flange, the clamping of the slab has to be taken into account.
- An inspection of the inside of the box-girder is not required if the statically necessary welds can be checked from the outside.
- To conclude, it can be said that the use of airtight small-size box-girders has become a state-of-the-art building technique for medium span bridges in Germany.

2.4.4 Bridges with prefabricated components and in-situ concrete

2.4.4.1 General

Due to the dominance of concrete bridges for small and medium spans in Germany, it has been recognised that the competitiveness of steel-concrete composite bridges can be decisively improved by a high level of prefabrication. Starting at the beginning of the 1990s, Roik [76] introduced the idea to use hot-rolled steel beams in composite road bridges for the small and medium span range together with prefabricated concrete elements. The main advantages of this proposal are still valid today:

- **Prefabrication**. A high level of quality can be achieved, e.g. welding on-site is not necessary and the corrosion protection can be fully applied in the workshop.
- **Erection time.** The high level of prefabrication in general leads to short erection times because the traffic is blocked only during the installation of the girder. Only short-time blocking of roads or rail tracks are required.
- **Lightweight.** If substructures exist and are in a good condition, they can be used further.

Since the end of the 1990s numerous composite bridges have been successfully built thanks to a high level of prefabrication and they have been able to establish themselves as an economic solution in the span range between 20 to 80 m. From the beginning, attempts have been undertaken to optimise not only the steel structure but also the way how to fabricate the concrete slab. For multi-span valley bridges a formwork carriage is often used, which is usually not an appropriate solution for bridges in the small and medium span range. Thus, two innovative approaches evolved, which are both combined with in-situ concrete.

- Steel girders and precast concrete elements, see Section 2.4.4.2
- Prefabricated composite girders, see Section 2.4.4.3

2.4.4.2 Steel girders and partial depth precast concrete elements

In 1989, the steel fabricator *ARBED* initiated a research programme to optimise the design and construction of composite bridges when using hot-rolled steel beams with advanced characteristics such as a girder height up to 1100 mm and a yield strength up to 460 MPa [49]. The characteristics of hot-rolled beams in contrast to welded girders were:

- multi-girder layout with distances of 2.5 m
- main girder made of hot-rolled beams without longitudinal stiffeners or bracings
- limited construction height of 1100 mm
- reduced slab thicknesses of 27 cm in comparison to the usual 35 cm

The main outcomes of the research project were that due to the geometry of the hot-rolled beams the risk of lateral-torsional buckling of the compression (bottom) flange at the supports is reduced because the web provides a good elastic restraint. The whole system was already intended to be used with precast concrete slab elements in order to reduce erection time because no additional formwork is needed and the use of precast concrete slab elements as permanent formwork facilitates erection. However, the cantilevering arms were planned to be made with in-situ concrete. Another drawback is that hot-rolled beams are only economically transportable with lengths up to 30 m.

In 1997, standardised designs for bridges crossing German motorways were worked out because the system requirements for the superstructures were the same in almost all the cases. The most frequently road types which need to be bridged are access roads “WW” (farm track), two- or three-lane roads with a RQ10.5 and RQ15.5.

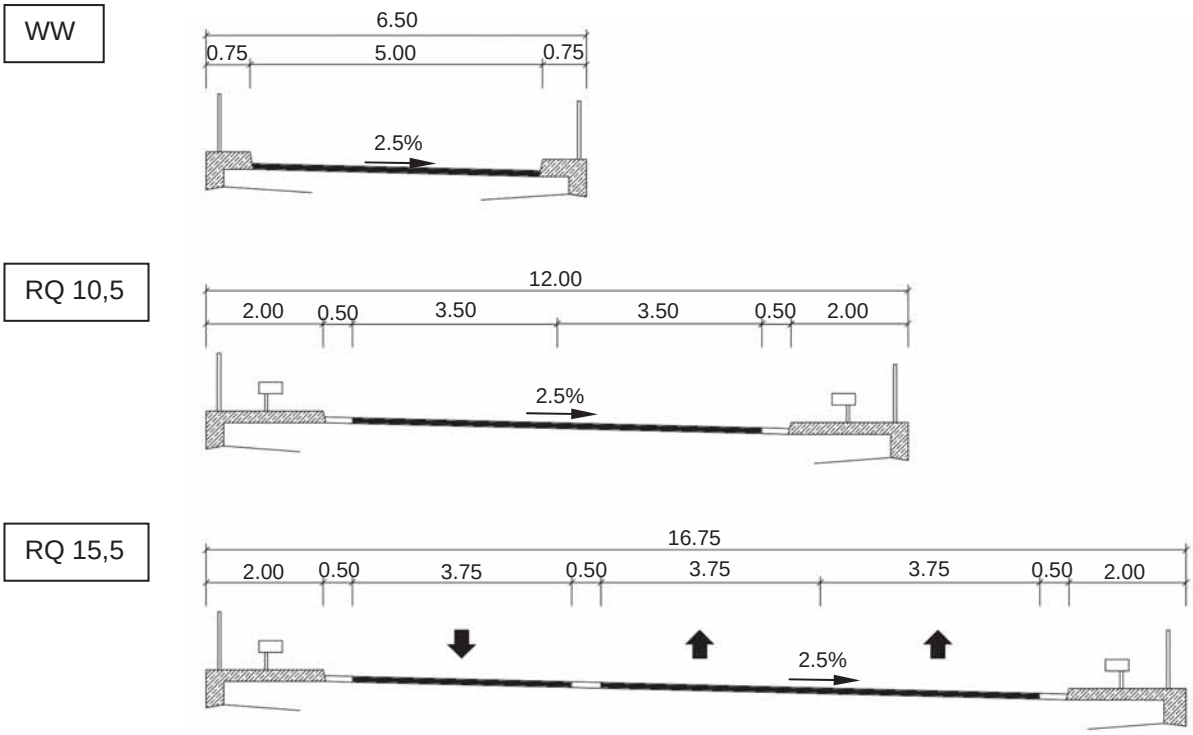

Figure 2-42: Typical layout of composite bridges with prefabricated slabs. Only slab system based on [71] is shown. Dimensions in [m].

Thus, the aim was to help the designers for typical cross sections of bridges with a single carriageway. The different standardised types have been also published in [81] and [82]. In contrast to the precast concrete elements which are commonly known for building construction, here so called “large area formwork elements” have been developed. They have the following characteristics [81]:

- The shear connection between large area formwork element and in-situ concrete is realised by garland-type shear reinforcement which have no upper reinforcement bar. As a result the reinforcement can be easily placed without the need of a complicated thread.
- The large area formwork elements are fully effective in the final state. To realise the shear connection, recesses are provided in the precast elements to fit the groups of studs, which are cast later on in a first step.
- Elastomer strips are applied to the steel girders to compensate for tolerances and to seal the possible gap between steel and concrete.
- The transverse joints are sealed in the workshop by foam rubber. They have a certain layout for the following reasons: the slab thickness is reduced at the joints to provide a sufficient concrete cover of 4.5 centimetres. The edges are broken to prevent flakings.

For the different construction types, distribution plans how many and where to place the large formwork elements most efficiently were already provided.

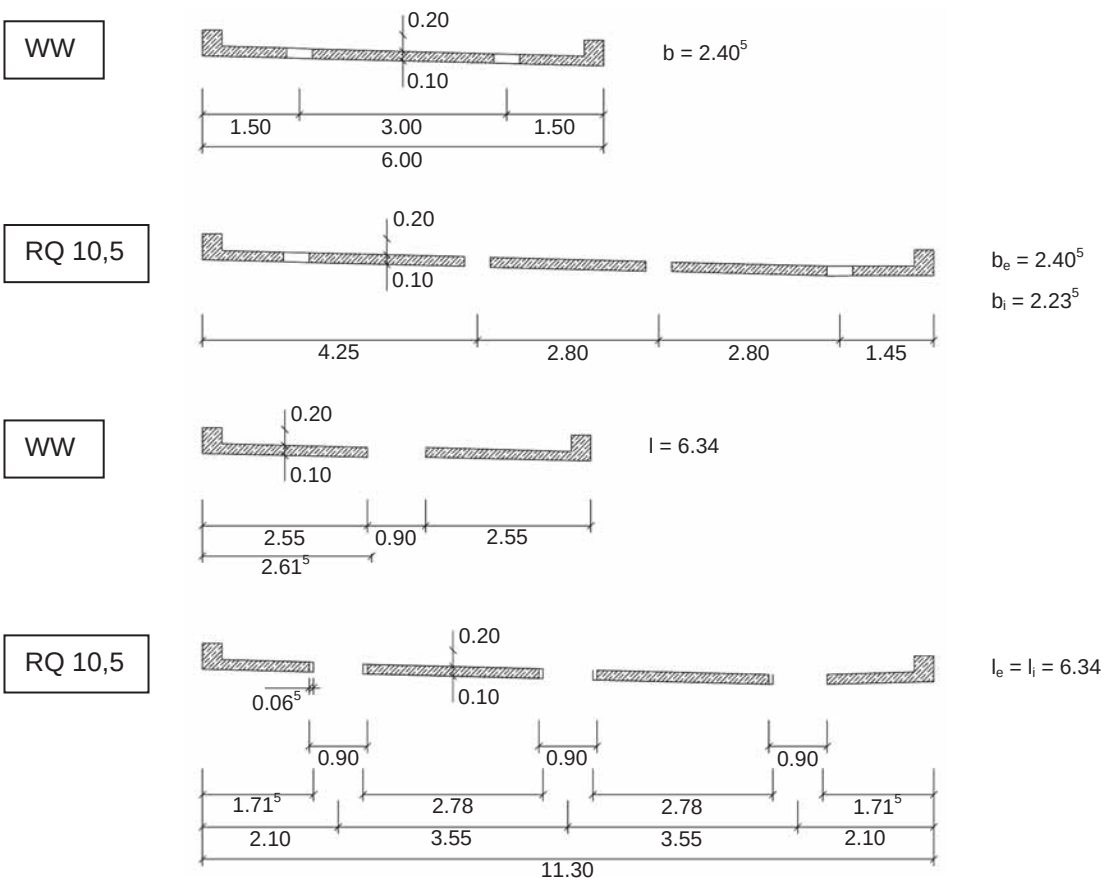

Figure 2-43: Example cross-sections of large area formwork elements based on [81] for the layouts of Figure 2-42. Dimensions in [m].

Figure 2-44 shows an example of a bridge with steel girders and precast concrete elements which has been built near Ravensburg. It can be seen that studs are grouped in order to allow for the cantilevering of the large area formwork elements.

Figure 2-44: Erection of a bridge with steel girders and precast concrete elements near Ravensburg, Germany.

2.4.4.3 Prefabricated composite girders

Figure 2-45 shows the layout of a typical prefabricated composite girder. It consists of a rolled or welded steel girder to which a concrete flange is added. The concrete flange is already prefabricated in the workshop and the shear connection can be realised either by vertical or horizontal studs, in the latter case omitting the top flange or by concrete dowels. On the building site this concrete flange serves then as formwork for the completion of the deck with in-situ concrete.

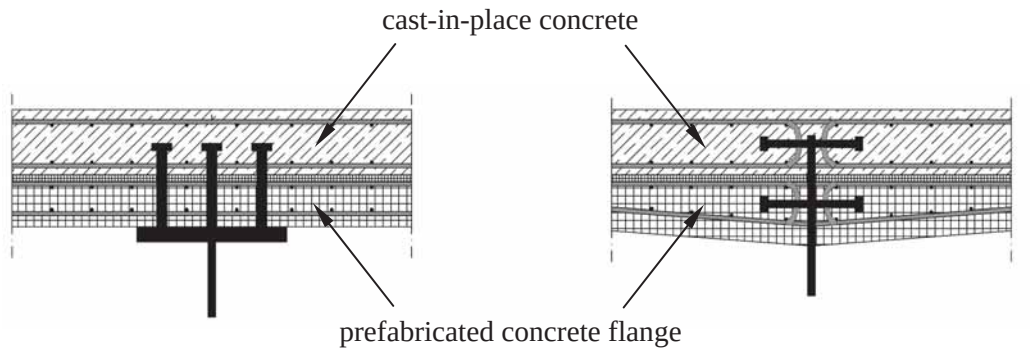

a) With vertical studs. b) With horizontal studs.

Figure 2-45: Typical cross-sections of prefabricated composite girder with in-situ concrete.

In the following, the characteristics of bridges with prefabricated composite girders and in-situ concrete are presented:

- **Mass.** In traditional composite construction only the steel girder is prefabricated and transported to the building site. Usually the steel girders support the formwork. In case of an unpropped erection, high internal forces due to the weight of formwork and concrete arise, which have to be resisted by the steel girder alone because composite action is not yet present. This increases the amount of structural steel and lowers the competitiveness. When using prefabricated composite girders instead, it has been shown in [24], [85] that savings in structural steel can be up to 30% in comparison with a traditional composite construction because the concrete flange as a structural element adds strength and stability to the steel girder.
- **Fabrication.** During fabrication of the composite girder no stresses are applied to the steel section. The steel girder is manufactured according to a stress-free workshop shape and the corrosion protection is already applied. During casting and curing of the concrete flange hereafter, the steel girder is supported in such a way that no internal forces arise in the girder and not intended deformations are avoided.

- **Transportation.** Due to their light weight, prefabricated composite girders can be transported and dealt with more easily than prestressed concrete girders for which only a maximum length of about 30 to 40 m due to their self-weight is feasible. In contrast to this, prefabricated composite girders can be delivered in larger dimensions: transportation issues limit the girder lengths to 60 m on the road and up to 100 m on the waterway according to [85].
- **Erection.** In traditional composite construction not only the steel girders had to take the internal forces induced by the weight of the formwork and the concrete but they also had to be braced to prevent them from overturning or lateral buckling. However, these bracings are difficult to install and expensive. The use of prefabricated composite girders simplifies this work step considerably because the composite girder itself provides strength and stability, which can be even enhanced by a coupling of the flanges. At best, the prefabricated composite girders and their arrangement are designed such that no additional formwork is needed for the casting of the concrete slab. Joints between prefabricated composite girders and adjacent structural components made of concrete can easily be designed structurally so that they can be used for all types of structural systems: simple and continuous beams as well as frame systems.
- **Erection time.** The high level of prefabrication in general leads to short erection times because the traffic is blocked only during the installation of the girder. No additional blocking of roads or rail tracks is required if the prefabricated composite girders are arranged in such a way that they provide both the working level and the formwork for the in-situ cast concrete slab.

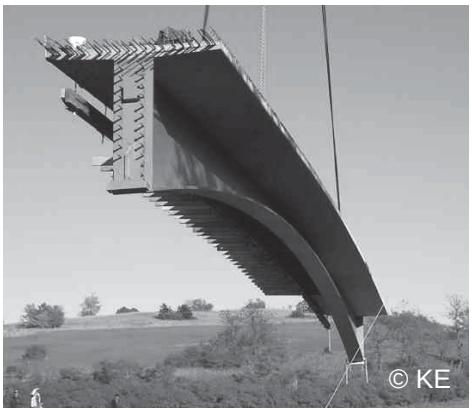

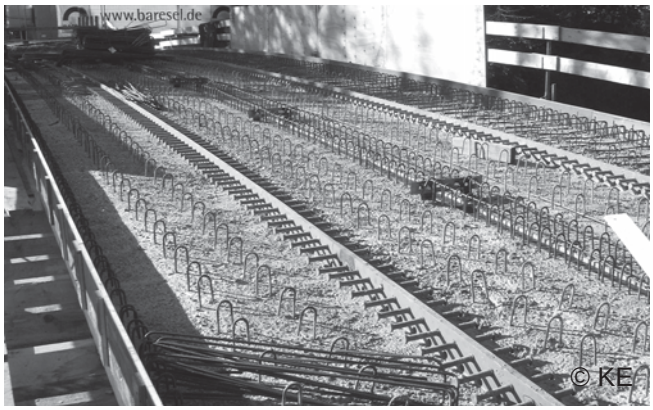

Figure 2-46: Erection of a prefabricated composite girder with horizontal studs near Münsingen, Germany.

- **Maintenance.** The fabrication of the girders in the factory assures a high level of workmanship e.g. with regard to the corrosion protection and the concrete quality such that little maintenance works is expected. At a later stage, composite girders are easier to inspect due to their open structural layout than prestressed concrete girders, which has become an important issue for bridge owners and operators due to a high number of damage patterns at prestressed concrete bridges in the 1990s.

Depending on the boundary conditions of the bridge location, the advantages of the prefabricated composite girders become fully effective when they are consistently utilised. Thus, they become a competitive solution in comparison with prestressed concrete girders. The following choices and advantages should be consistently considered when designing a prefabricated composite girder:

- Use of high-strength steel grades
- Cheap foundations due to a light weight superstructure
- Few obstructions of traffic due to short erection times
- Well-defined pricing and cost calculation possible due to prefabrication
- Advanced structural systems: bridges with integral abutments which reduce the deformation and vibration of the slender superstructure

- Advanced structural systems: bridges without middle piers so that the traffic is neither blocked during erection nor during maintenance e.g. of the bearing at the middle pier
- Low maintenance costs for integral bridges without bearings and expansion joints

In Table 2-5, examples of published bridge data are given which were successfully accomplished. However, they represent only a small part of the bridges built with prefabricated composite girders. In general, a composite bridge becomes an economic alternative to concrete bridges when no ground-based falsework is feasible for casting. It can be seen that all types of structural systems are built although continuous beams and frame systems are more preferable than simple beams. An outstanding example of a continuous twin-girder system is the bridge Oberhartmannsreuth [2], which is a long multi-span valley bridge. For a number of bridges crossing e.g. motorways a frame system is often chosen [7].

Table 2-5: Data of bridges with prefabricated composite girders and in-situ concrete in Germany.

Bridge	Year of comple-tion	Total length [m]	Spans [m]	Structural system	Deck area [m^2]	Costs [€/m^2]
Schmuckerweg	n.a.	33.5	33.5	simple	436	n.a.
Regen	n.a.	107.6	33.4-40.8	continuous	1399	n.a.
Oberhartmannsreuth	2000	201.6	34.8-44.0	continuous	5860	n.a.
Unterhaching	2000	44.5	44.5	frame	614	1,873
Bergkirchen	2002	46.5	46.5	frame	465	~ 2,000
Sulzemoos	2002	48.5	48.5	frame	465	2,120

Further development of the prefabricated composite girders aims at a reduction of the amount of welding and simple shear connections. As a result, rolled steel girders are cut in the web in such a way that the generated geometry can be used as concrete dowels. An example of this bridge type is the bri*dge Pöcking des*cribed in [86].

2.5 Spain

2.5.1 Introduction

According to the available information from several sources by the Ministry of Public Works, it is possible to provide some details with the aim to offer, at least, a qualitative analysis of the market share of steel and composite bridges in the latest years.

The surface of the country is 505,000 km^2 and Spain has more that 164,000 km of National Roads, that figure does not take into consideration the city roads, managed by the city councils, which are about 490,000 km more. Moreover, the Spanish National Company of Railways (RENFE) has 15,700 km of railways with a total amount of 6,401 bridges.

However, the information presented as follows has been obtained from the Spanish Road Administration’s database of bridges built only in the National Roads. This database considers bridges with span longer than 10 m and the public available information is up to1996:

- 8,500 bridges, by typologies, 420 of them being pedestrian bridges:
  - 5,509 I-girder bridges,
  - 506 box-girder bridges,
  - 5 cable-stayed and
  - 17 truss bridges.
- Regarding the structural material, the vast majority are made of concrete and the figures about steel and composite bridges up to 1996 are as follows:
  - 82 are steel bridges, see Table 2-6, and
  - 159 are composite bridges
- Other information provided by the database about the structural typology is the following:
  - Average maximum span: 23.66 m.
  - Average length: 69 m.

And focusing on steel and steel and concrete composite bridges, the steel bridges have an average maximum span of 41.11 m and an average length of 109.80 m, for the steel and concrete composite bridges those values are 38.50 m and 102.80 m respectively.

Table 2-6: Steel bridges in Spain by typologies (Information up to 1996).

Structural typologies	Number of existing steel bridges
Girder Bridges	33
Box-girder Bridges	25
Cable-stayed Bridges	1
Truss Bridges	17
Other	6
Total	82

In addition to the information presented up to 1996, is it possible to have some information about the activities related to the bridge construction in most recent years. The Ministry of Public Works, by means of the Spanish Road Administration, build between 300 and 400 bridges per year in the National Roads and about 10 to 20 of them are made of steel or steel and concrete composite structures. Those data could help to make an estimation of the current market share of steel and steel and concrete composite bridges, less that 3%.

In Spain is generally acknowledged that the market share of steel and steel and concrete composite bridge is not representative of the technical capabilities of the civil engineers, steelwork companies and general constructors of the country. There are some commonly agreed explanations to this situation, [58], [60]:

- Although in Spain there are more than 40 years of experience in outstanding composite structures, the engineering cost for the design of composite bridges is more expensive than for the concrete based alternatives.
- The strict box type composite solutions, which have been more developed in Spain, provide additional advantages such quality assurance due to the industrialised construction, reduction of construction time, and indirect costs, thanks to the highly prefabricated components used,

minimisation of material employed but all these advantages are not easy to be taken into consideration in the budget and, at least up to now, a competitive budget is the key issue.

- Finally, composite bridges are seen as the preferred option in urban areas, by their aesthetical value, or in seismic areas or where tall piers or deep foundations are required, due to the notable reduction in weigh through composite solutions. But, for more conventional medium span bridges, composite bridges are rarely built Spain.

According to design experts and the Spanish independent steel promotion association, APTA [58], [60], "*our country's experience, and that of our European neighbours shows that there must be a decided and active impulse by the steel sector with ensuing support and backing by the relevant authorities, in order to ensure the introduction composite bridges*.

The French experience shows that through the systematic use and optimization of these solutions on high-speed train lines, it has been possible to develop a technologically advanced and very competitive "national" bridge type, which may be potentially exported in the near future for use in railway infrastructure throughout East Asia, Eastern Europe or South America."

2.5.2 Spanish regulatory frame for bridge design

The Spanish regulatory frame for steel and steel and concrete composite bridge design is based on the following documents:

- To determine the actions, the compulsory document is the "Instrucción sobre las acciones a considerar en el proyecto de puentes de carretera" [42].
- For steel bridges the design recommendations are covered by the "Recomendaciones para el proyecto de puentes metálicos para carreteras" [77].
- In case of composite bridges, the relevant document is the "Recomendaciones para el proyecto de puentes mixtos para carreteras" [78].
- Finally, the Ministry of Public Works edited a handbook to help civil engineers in the use of the Spanish bridge design recommendation: "Manual de aplicación de las recomendaciones RPM-RPX/95" [79].

The relationship between the Spanish design recommendations and the relevant Eurocodes for steel and concrete composite bride design can be discussed in this Design Manual thanks to the background provided by a study carried out by the Ministry of Public Works in collaboration with the Spanish Structural Concrete Scientific and Technical Association, ACHE [1], [17].

In principle, the basis of design of the Spanish documents are harmonised with those settled in the Eurocodes. In fact, the Spanish documents were drafted in the period of the transformation of the Eurocodes from ENV version to EN version, and because of that reason it was possible to take benefit of the draft versions of the Eurocodes, prEN, to develop the Spanish documents.

However, there exist differences between the Eurocodes and the Spanish recommendations, mainly regarding the detailing of the bridge. To analyze the real impact of the final design due to the differences between the Spanish recommendations and the Eurocodes, the case study showed in the Figure 2-47 has been analysed in detail by the Ministry of Public Works and ACHE.

The main conclusions derived from this case study showed that the differences in the verification of the limit states according to the Eurocodes or the Spanish recommendations result in a very limited impact in the resulting final design, see Figure 2-48. The main differences detected in the case study are the following:

- Basis of design: the Spanish recommendations are harmonised with the Eurocodes.
- Actions and combination of actions: the live load is much greater in EN 1991-2 [29], than in IAP [42]. However, additional differences on the partial factor for actions and combination of actions, ψ, and for materials, γ, diminish the effect of the bigger live load of the EN 1991-2 and the ULS safety reserve is quite similar as consequence.

- Actions due to vehicles: EN 1991-2 [29] establishes an adjustment factor for heavy vehicles and another for uniform live load, that approach offers the possibility to adapt the values of these load models to the specific Spanish expected traffic. For the case study presented, it was taken the default value: 1.0
- Section resistance and effective width: there are differences in several aspects related to the formulations regarding the design of the cross section such as the effective widths, the evaluation of creep and cracking, etc. However, the final results are quite similar in the case study analysed and, in general, the methodology and approach has a common conceptual basis in the Spanish recommendations and in the Eurocodes for bridge design.
- Bending moment resistance of the cross section: for this issue there exists a very important difference between the Spanish recommendations and the Eurocodes. The Spanish recommendations for composite bridge design RPX [78] provides the so called "elastoplastic method (EP)" for which, as opposed to the Eurocodes, it is not necessary to classify the cross-sections and the effective cross section is obtained from the strain distribution. By using this approach, the discontinuities at the limits between different cross-section classes subsequently disappear.
- Shear connection:
    - The approach of the Spanish recommendations settled in the RPX is easier to use than the provided in the EN 1994-2 [36] and, in addition, the RPX offers some coherence because in the calculation of the resistance of the shear connection the bending resistance of the cross sections is the value taken into account. The Eurocode, instead, uses the acting moment. For the case studied, the RPX approach does not have a relevant additional cost in the final result of the shear connection in comparison with the result of the Eurocode.
    - However, the EN 1994-2 approach provides a better shear connectors distribution for the ULS elastoplastic distribution of longitudinal shear per unit length, while the SLS of the shear connection is assured by an additional condition. According to this conclusion, the RPX procedure could be improved by the amendment of supplementary limits with regard to the minimum number of shear connectors in the mid - span sections.
    - With regard to the design of the sections submitted to hogging bending moments, the method provided by EN 1994-2 [36], needs to be amended in order to clarify how the shear connection has to be designed when the acting moment is larger than $M_{el,Rd}$.

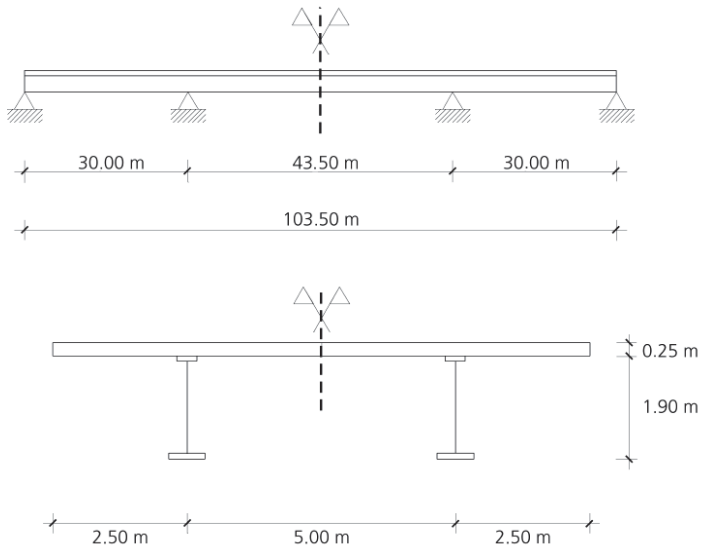

Figure 2-47: Case study for comparison between Spanish recommendations and Eurocodes for steel and steel and concrete composite bridge design [1], [17].

All the previous conclusions have been derived after the analysis in detail of the case study presented in the Figure 2-48, obviously, in order to evaluate the consequences of applying the Eurocodes to composite bridge design in Spain and, moreover, to establish the economic impacts derived from the use of Spanish recommendations or the Eurocodes, it would be necessary to carry out further analysis considering parameters such us span, bridge typology, detailing and fabrication costs of the structure… But for the aim of this Design Manual, these conclusions are enough to detect and to underline the main differences between the Spanish recommendations and the Eurocodes for bridge design.

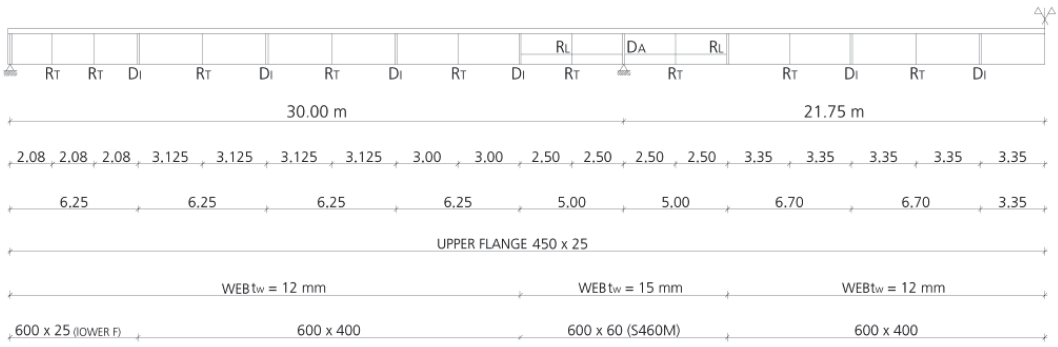

RT: Transversal stiffener; DI: Intermediate Diaphragm; DA: Support Diaphragm; RI: Longitudinal

Structural steel	for $t \leq 40$ mm for $40 < t \leq 100$ mm	S355 S460	f_y = 355 N/mm² f_y = 430 N/mm²
Concrete	C30/37	f_{ck} = 30 N/mm²	
Reinforcing steel	B 500	f_{sk} = 500 N/mm²	
Shear connectors	ϕ = 19 mm h = 125 mm	f_u = 450 N/mm²	

Figure 2-48: Final design of the sections and arrangements of stiffeners and diaphragms [1], [17].

2.5.3 Bridge examples

The preference in Spain for the box sections in steel and in steel and concrete composite bridges and in addition the frequent practice of the double composite action in bridge structures is widely acknowledged [5], [80]. The Spanish civil engineers Martinez Calzón and Fernández Ordoñez, , see www.mc2.es and Figure 2-49, adopted 35 year ago innovative approaches for composite bridges.

a) Puente de Juan Bravo, Madrid, 1970 (depth-to-span ratio L/h = 40 , weathering steel).

b) Puente del Diablo, Barcelona, 1972 (100 m span and twin composite triangular boxes).

Figure 2-49: Innovative designs for bridges in Spain [60].

c) Puente sobre la Ría de Ciérvana, Bilbao, 1978
(first example worldwide of double composite action reported).

Figure 2-49 (continued): Innovative designs for bridges in Spain [60].

In order to explain in a more detailed way the use of the double composite action, the example of *"The Tina Menor viaduct on the Cantábrico highway"* presents a complete case study to illustrate this typology of composite bridge with a box section.

In Spain, an innovative approach has been developed for the double composite action that is the so called *"strict box composite bridge"* [54], [59] consisting of a hybrid between the French twin-girder system and the Spanish double composite action box type, which combines the response of the open section at mid-span with a double composite closed section at the area of supports submitted to hogging bending. An additional innovation consists of replacing the lower steel torsion bracing at mid spans by prefabricated slabs, see the example of the *"Arroyo de las Piedras viaduct on high speed railway between Córdoba and Málaga"* in Figure 2-51 where a case study to illustrate the use of the *"strict box composite bridge typology"* is presented.

© Millanes Mato, F; IDEAM, S.A.

© Millanes Mato, F; IDEAM, S.A.

Figure 2-50: Puente Betxi Borriol, Valencia, Spain [60].

Although the contents of this Design Manual are mainly aimed to provide guidance about twin - girder and box-girders, in the Figure 2-51 there are other examples of Spanish applications of composite bridges: “Abaqus” system for variable depth launching, composite arch bridges and cable stayed composite bridges.

The following sections, as stated before, are focused on those Spanish specificities and presented examples aim to offer a vision of the state of the art and current practice on most widely built composite bridges in Spain, with the limitation of this Design Manual able to address only a few case studies.

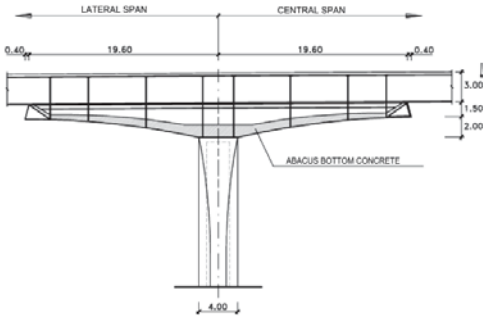

a) Puente del Arenal, Cordoba, 1993, and scheme of the “Abaqus” system for the launching of bridges with variable depth [55].

© Manterola Armisén, J; CARLOS FERNANDEZ CASADO, S.L.

b) Composite tubular arch: Puente sobre el Escudo, Unquera, 2001 [52].

© Pantaléon Prieto, M.J; APIA XXI, S.A.

c) Double composite box section: Puente sobre el río Tajo, Alcántara Reservoir, 2006 [51].

Figure 2-51: Further examples of composite bridges in Spain.

d) Cable stayed composite bridge: Viaducto de Escaleritas, Las Plamas de Gran Canaria, 2007 [66].

Figure 2-51 (continued): Further examples of composite bridges in Spain.

The Tina Menor viaduct on the Cantabrico highway

The viaduct across the *Tina Menor* river allows the Cantabrico Highway to cross the estuary at San Vicente de la Barquera, a small tourist city close to Santander. The owner of the viaduct is the Ministry of Public Works and the design was done by Javier Manterola Armisén, Antonio Martínez Cutillas y Armando López Padilla from the engineering company Carlos Fernández Casado [53], [56].

The total length of the viaduct, see Figure 2-52, is 378.50 m with four spans of 64.25, 125.00, 125.00 and 64.25 m. It is important to note that the first two spans are in a circular alignment of 600 m. radius and the last two spans are in a transition curve with a change in the curvature sign.

The bridge structure is a continuous beam with a steel and concrete composite box section. The main dimensions of the box cross section, Figure 2-53, are the following: a constant depth of 6.50 m and a constant width of 10.00 m. The concrete slab has a total thickness of 0.32 m and was built by using prefabricated ribbed slabs with a minimum thickness of 0.06 m and a additional thickness of 0.26 m with on site concrete.

To achieve the 30.00 m wide corresponding to the two roadways of the highway, the box section has a lateral truss, see Figure 2-54. In addition, the lateral truss contributes significantly to the torsional stiffness of the section, approximately 25% of that provided by the box section considered alone.

The thickness of the box-girder bottom flange ranges from 20 to 30 mm and the web varies for 15 to 30 mm. The significant reduction of the bottom flange thickness, and the requirement of stiffening, is achieved thanks to the use of the double composite actions concept. The sections at supports have been provided with a reinforced concrete slab, connected to the lower plate of the box, with a slab thickness that range from 0.20 m to 0.70 m.

The whole deck is prestressed transversally and the construction was made with temporary supports in the first two spans and half of the third span. The construction procedure for the other parts of the structure used was incremental launching due to the difficulty for erection in some areas of the bridge location, see Figure 2-55.

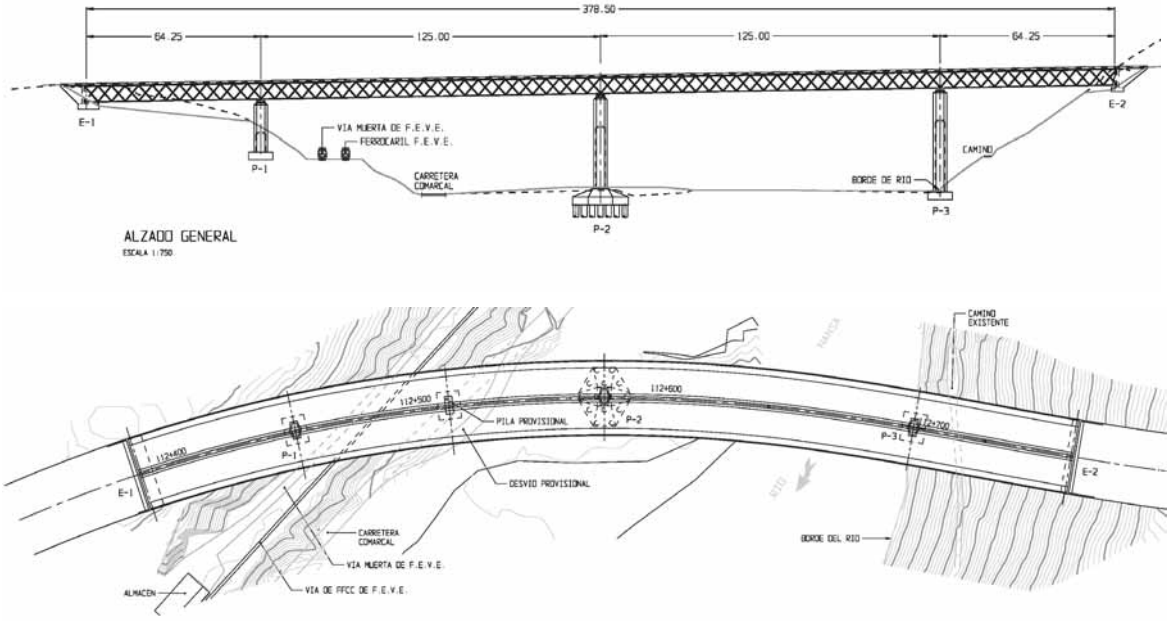

Figure 2-52: The viaduct of Tina Menor, elevation and plan view [56].

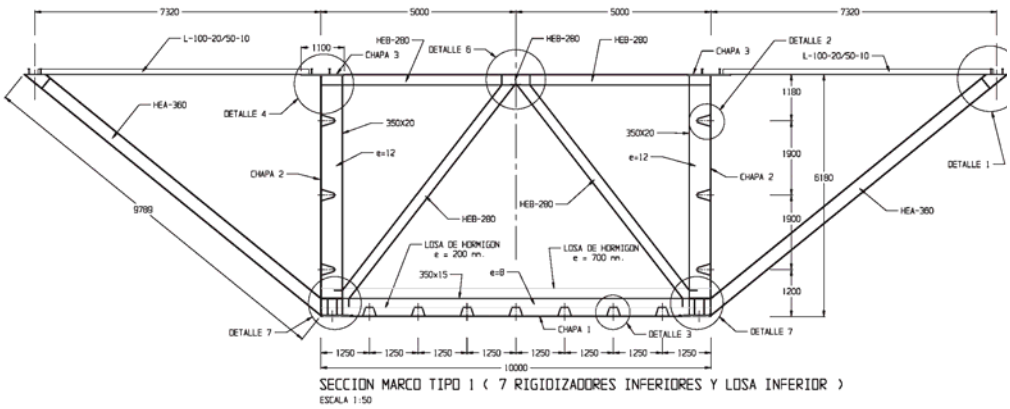

Figure 2-53: The viaduct of Tina Menor, cross section and detail of the concrete slab in the bottom flange (light grey) to obtain the double composite action for the cross sections closer to the piers [56].

Figure 2-54: The viaduct of Tina Menor, lateral truss [56].

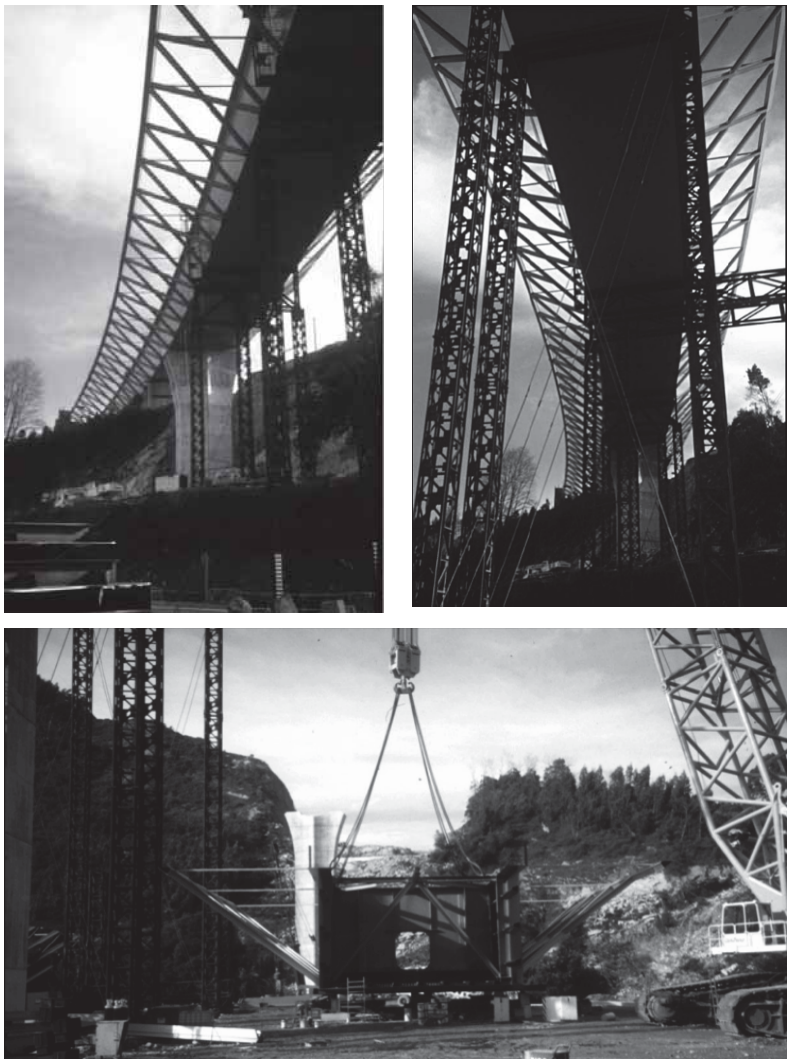

Figure 2-55: The viaduct of Tina Menor, propped construction [56].

The Arroyo de las Piedras viaduct on high speed railway between Córdoba and Málaga

The *Arroyo de las Piedras* viaduct offers an innovative solution in steel and concrete composite bridges for high speed railway lines. The design was done by Francisco Millanes, Javier Pascual Santos and Miguel Ortega Cornejo from IDEAM, [59], [61], and is the first composite high speed railway bridge in Spain.

According to the *"new Spanish tradition"*, the cross section adopted is the *"strict box"*, the double composite action in box sections commonly used in Spain for composite road bridges. But in this bridge several innovations has been adopted that provides in fact a new design approach for the double composite action in bridges .

Before presenting the details of the cross section, it is relevant to explain in depth its concept; the starting point of the design is the typical twin plate girder solutions, frequently used in France and whole Europe, modified to be improved according the strict box-girder concept but keeping the construction advantages of former. In addition to the use of the double composite action in hogging areas another innovation in this bridge is to use it along the whole length of the bridge to provide the torsional stiffness required due to dynamic actions and eccentrically loading for trains operating along a single track.

The structure is a continuous composite beam with spans of 50.40 m, 17 x 63.50 m, 44.00 m and 35.00 m. At the time of the design and building stages it was the longest span viaduct of its type for high speed railway bridges, 0.50 m more than the Orgon viaduct on the French TGV Mediterranée; regarding the piers, several of them exceed 93 m, see Figure 2-56.

Figure 2-56: The viaduct of the Arroyo de las Piedras [61].

The cross section of the deck is made of two I-girders of 3.85 m depth and a concrete slab connected to the top flange of 14 m wide, whose thickness varies from 0.41 m in the longitudinal axis to 0.22 m in the edge of the cross section. The resulting composite cross section, see Figure 2-57, has a constant total depth of 4.26 m.

Without a more detailed description, the adopted cross section could be understand as somewhat similar to the typical twin-girder solutions frequently used in France but there are several interesting modifications that will be described as follows, [61]:

- Cross bracings are used instead of full web diaphragms with the same depth as the main beam. This improvement facilitates on-site assembly, reduces the weight of steel and, as consequence, the volume of welding required. These cross bracings are located every 8 m along the bridge.
- The bottom steel truss is replaced by prefabricated slabs, 2 m wide and 14 cm thick. At mid span, the prefabricated slabs are not connected together and only one metre of each is connected to the bottom flanges to transfer torsion shear flows between the main girders and the slabs. With this solution, the required torsional stiffness is thus guaranteed, and is even higher than with the typical bottom steel truss.

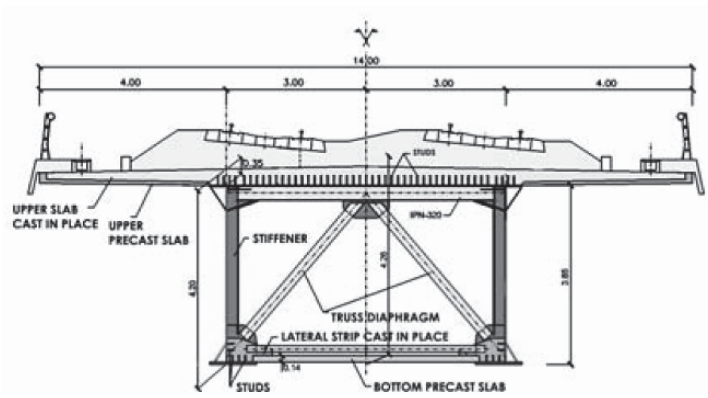

a) Mid span.

Figure 2-57: Cross section of the Arroyo de las Piedras viaduct [61].

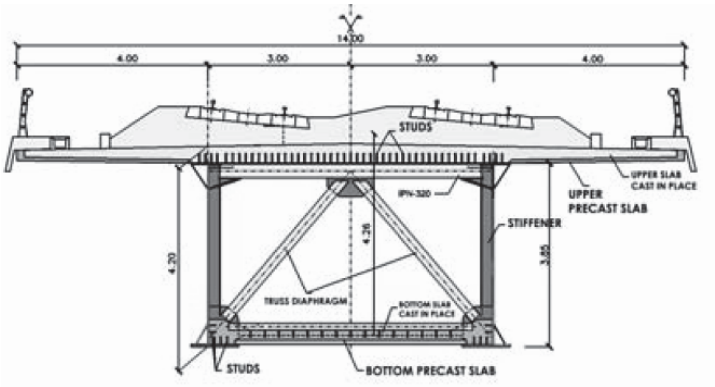

b) Support.

Figure 2-57 (continued): Coss section of the Arroyo de las Piedras viaduct [61].

- Regarding the steel girders, they have been fabricated with two external triangular corner cells instead of longitudinal web stiffeners, see Figure 2-58. The cells improve the stability of flanges and webs submitted to compression during the launching and in service conditions. In addition, the joining collaboration of the bottom external cell and the bottom composite flange, resulting from the previously described solution, provide an excellent system to improve web resistance to concentrated loads during launching. On the other hand, vertical stiffeners are adopted every 4 m.
- Regarding the top flange, transversal IPN sections are connected to the upper slab approximately every 2 m to obtain a steel and concrete composite deck, leading to a reduction of the total weight of the bridge.

a) Twin plate girders adopted for the cross section.

b) Girder with external triangular cells.

c) Prefabricated slabs in the top flange.

d) Prefabricated slabs and on site concrete in the bottom flanges.

Figure 2-58: Erection of the Arroyo de las Piedras viaduct [61].

As summary, the typical cross section in hogging areas is similar to the mid span cross section, but with the difference that the double composite action is provided by concreting in situ over the bottom flange to achieve the full collaboration of the precast slabs. The bottom slab extends 13.90 m on both sides of the pier in the 63.50 m spans, and a bit less in the shorter spans. The thickness of the slab varies from 25 cm at the end to a maximum of 50 cm in the section located at the piers. The slab is connected with studs and passive reinforcement to the twin-girders flanges.

Thanks to the double composite action, the maximum thickness of steel plates in the bridge is 40 mm, much thinner than the classical twin-girder solution. The construction procedure was the launching of the bridge from both abutments, see Figure 2-59.

a) Several stages of the launching.

b) Detail of the auxiliary launching structure and the launching cables and jacks.

c) Operations during pier passing and nose beam raising.

Figure 2-59: Launching of the Arroyo de las Piedras viaduct [61].

The steel used in the main structure has been S-355 J2G2W Cor-Ten, weathering steel. This steel is appropriate for the climatic conditions of the area where the bridge is located. For the internal truss diaphragms, carbon steel has been used, which makes it possible to reduce the cost of the bridge, after having taken into account the cost of maintaining the carbon steel, which are perfectly accessible for maintenance and inspection.

2.6 Sweden

2.6.1 Introduction

Sweden is large country with an area equal to France but with only 9 million inhabitants. One consequence is that it has long roads with little traffic. Most roads have two lanes only and motorways have two lanes in each direction. In the latter case it is common to build one bridge for each direction. This solution is obviously more expensive than one wide bridge with all four lanes. Although this, it is mostly preferred by clients because of the increased flexibility for maintenance and repair. This means that Swedish composite bridges are quite narrow with widths not exceeding 13 m and the common

solution is a twin I-girder bridge. In average 100 road bridges per year are built in Sweden and the market share for composite bridges is about 40%.

For a long time rail bridges were only built as replacements of old bridges but now there is renaissance for rail roads. Currently a new rail road with length 190 km is being finished along the northern coast including 120 bridges of which many of the largest bridges are composite bridges. Furthermore, on the Swedish West Coast 140 new road bridges will be built.

2.6.2 Road bridges

The bridge at Rångedala is a typical example of a modern Swedish motor way bridge. It is located on national road E6 in south western Sweden. It is a motorway with four lanes and the bridge is split in two, each with two lanes, see Figure 2-60 and Figure 2-61. General data of the bridge is as follows:

Spans: 54+4x70+54 m

Width of deck: 9.75 m

Type: Twin I-girders 2.6 m deep

Steel: S460 and S355 hybrid girders.

Concrete: C35/45 1.30 m^2 per girder

Steel weight: 1480 tons or 196 kg/m^2

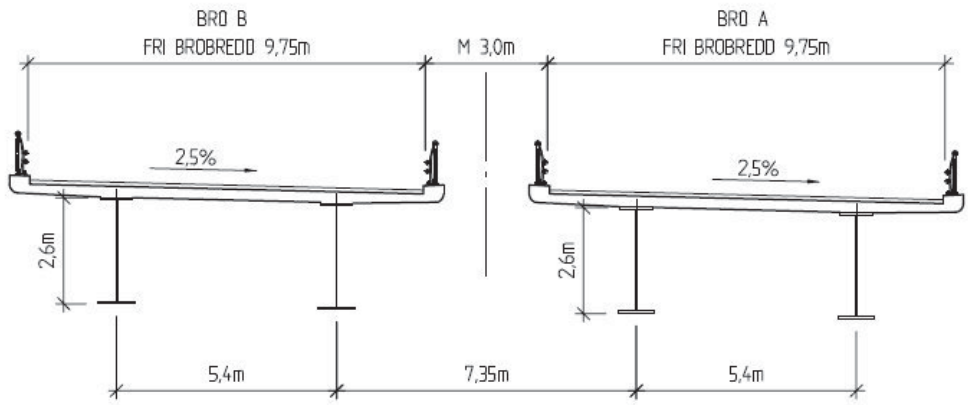

Figure 2-60: Cross section of the bridge at Rångedala, Sweden.

Figure 2-61: Bridge at Rångedala, Sweden, during erection.

The bridge was designed according to the Swedish design code Bro 2004 [9]. The traffic loads are a bit smaller than those of EN 1991. The code requires elastic global analysis and elastic resistance but allows the use of post-critical resistance for buckling. For breathing there is a limitation of the stresses

related to the critical stresses, which usually governs the web thickness in mid span. Fatigue from traffic does not usually govern the design, here the number of cycles is set to 100 000 cycles or 400 000 cycles (major roads like E4, E6 or some bridges in urban areas like Stockholm).

2.6.3 Bridges with integral abutments

The cost of maintenance is an ever-growing problem for road administrations around the world, and bridges are no exception to the rule. One way to reduce the need for future maintenance, as well as the investment cost, is to make bridges without transition joints. It is a cost effective design but one question is how long the bridge can be allowed to be. This is not only governed by the absence of expansion joints but also by yielding of the piles, which is caused by imposed deformations from temperature and traffic. In the US the yielding from imposed deformations is ignored and a bridge up to at least over 300 m has been built with this design.

In the 1980´s a few bridges with integral abutments were built in Sweden. Most of the short to medium span bridges in Sweden are semi-integral, meaning that there are no joints on the road surface but that the bridge rests on bearings. In a project at Lulea University of Technology it was investigated if piles with cruciform cross section were suitable for integral bridges, including full scale tests. Within the project a bridge was built in the Swedish province of Västerbotten, completed in September 2000. The bridge was a single span composite bridge with a span of 37.15 m.

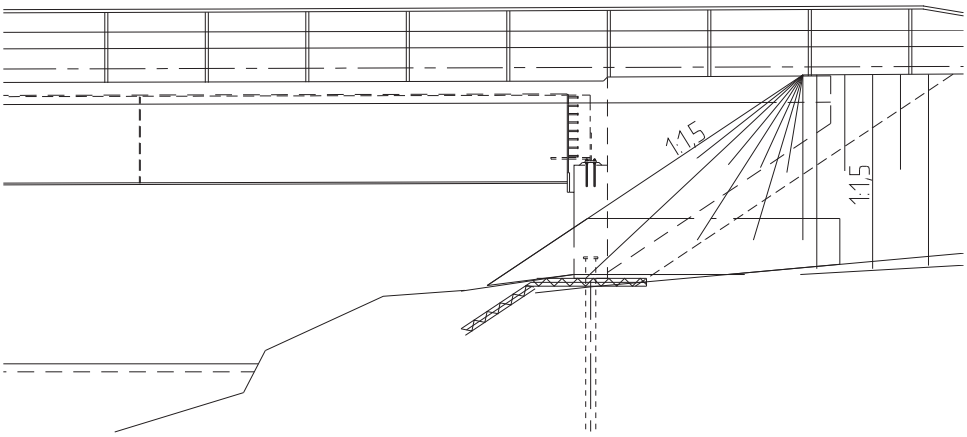

Figure 2-62: Integral abutment bridge which is supported by steel piles under the back wall.

In order to minimize the bending stresses arising from the deflection of the bridge, the work was carried out in the following way:

1. Eight piles, X180·24 mm, were used for each abutment. The piles were rotated 45 degrees from the line of support, minimizing the bending stresses from the traffic load.
2. The steel girders were erected on steel bearings on top of the lower part of the back wall. On safe-hand side, the girders were designed as simply supported girders, not taking the restraint from the embankment into account.
3. The formwork for the side wings was removed, giving the steel piles a rotation in the opposite direction of the one arising from the traffic. In other words, the piles were pre-stressed to compensate for later rotations from dead load and traffic.
4. The upper parts of the back walls were cast together with the concrete deck of the bridge.
5. The embankment behind the back walls was filled up, and the surfacing as well as the side rails were placed on the bridge.

2.6.4 Bridges with full depth prefabricated deck slabs

Several road bridges in Sweden have been built with full depth prefabricated decks. Most of those have had transverse joints with a gap of 400 mm in which hair pin stirrups have overlapped. The shear

connectors have been concentrated in groups typically located at the joints between the deck elements with a centre to centre spacing of 1.8 m. After placing the elements on the girders the joints and the holes for the shear studs have been concreted. Based on reach at LTU a new solution that brings the technique a further step forward will be described here.

In 2002, the Swedish road bridge AC 1684 was built as a railway crossing, in Norrfors, replacing an old narrow bridge in bad condition. It is a single span composite bridge with a span of 28 m. The bridge deck was designed to be prefabricated, in 16 concrete deck elements, which were assembled with dry joints. The construction costs were presumed to be a bit higher than for a conventional concrete bridge, but since the disturbance of the railway traffic could be minimized it was worth trying the new concept. One challenge was the requirement that the bridge should be assembled in less than 24 hours. The time limit was governed by how long the electricity for the railroad could be switched off. A plan of the bridge is shown in Figure 2-63. As can be seen the bridge is curved and the deck has a single slope, which makes the geometry complicated both for the concrete elements and the steel girders. High requirements had to be fulfilled by all of the steel parts that were in contact with the concrete.

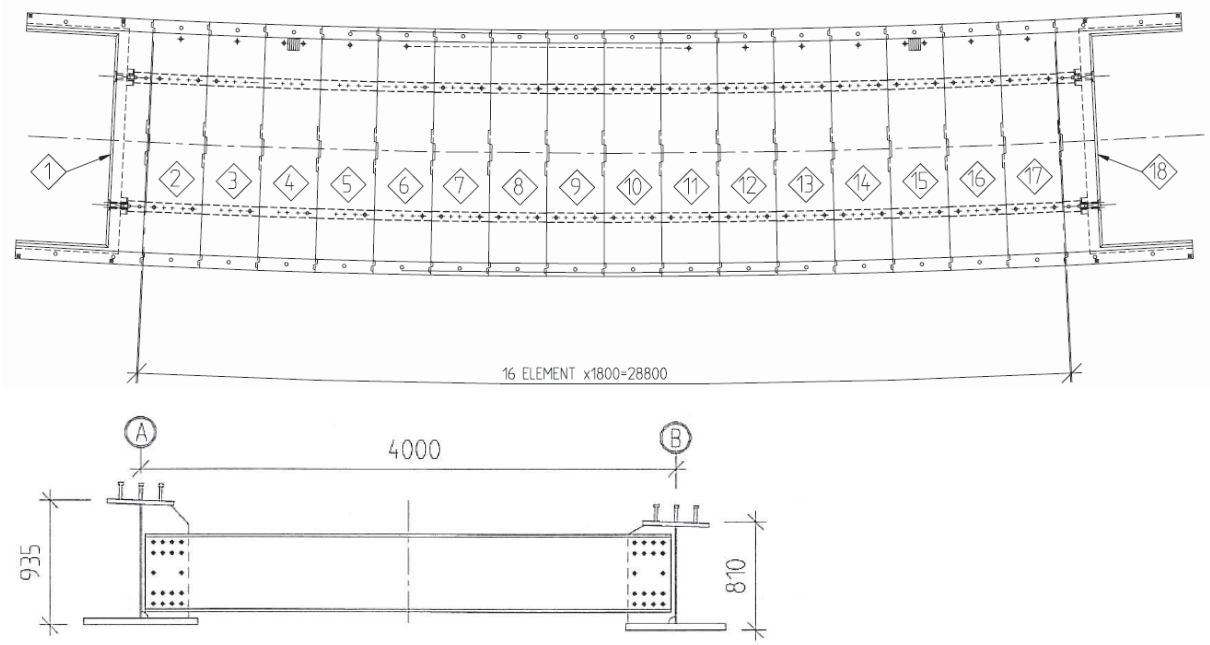

Figure 2-63: Plan and cross section of the prefabricated bridge. Elements 1 and 18 are the prefabricated back walls/end screens.

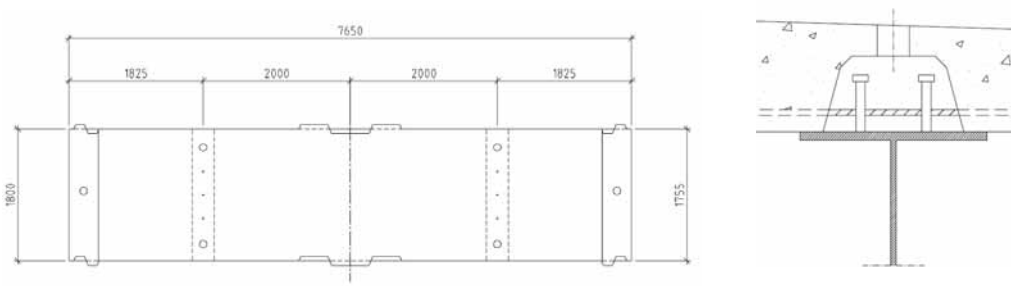

Figure 2-64: Plan of a bridge deck element and cross section above girder.

Each deck element had the dimension of 1800x7500x280 mm, giving an element weight of about 10 tons. The elements were tapered in plan because of the curve, see Figure 2-64. The elements have a tunnel above the girders, which was grouted with a special concrete mix through 100 mm holes, and the tunnel sides have a pattern to ensure shear transfer between the grout and the elements. In the joints at the edges and in the middle of the elements, there are tongues and groves for transfer of vertical shear between the elements. In order to make the elements fit the next element was cast with the edge of the previous one as form work (match casting). The accuracy of this procedure was good enough and a

small prestressing of 600 kN by external devices at the ends of the bridge using the girders as ties left very small gaps between the elements.

Figure 2-65: Bridge deck element being lifted in place.

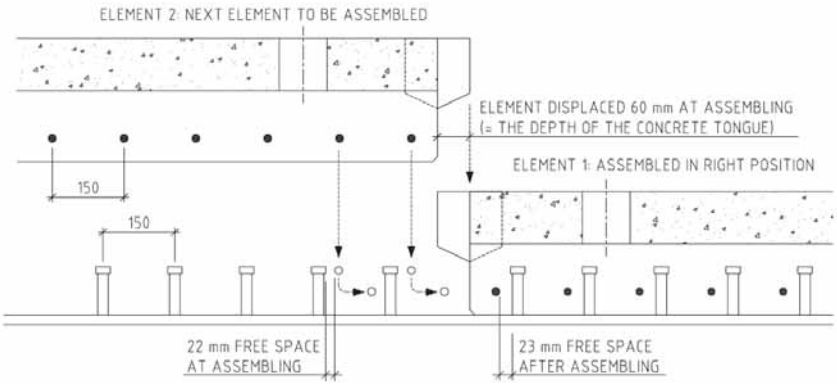

Figure 2-66: Illustration of the narrow tolerances.

Figure 2-65 shows an element being lifted in place and Figure 2-66 shows the narrow tolerances necessary to make the pieces to fit. The project was evaluated in order to gather the experiences and the opinions about this type of prefabricated element bridges. The evaluation states that the most important experience is that all of the actors must be aware of the aim of the project and their responsibilities. It is necessary that all actors realize the importance of the demanded precision, which is much stricter than in normal construction. There is no time for corrections during the assembly of the bridge. Although everything was not perfect, the bridge came into place in time. However, the construction industry has to get used to stricter procedure and tolerances before this kind of industrialized concept can be used in a larger scale.

2.6.5 Railway bridges

The Swedish national Rail Administration prefers concrete bridges but for medium and long spans over water composite bridges are a competitive alternative. A recent example is the bridge over Veckefjärden, which is a composite I-girder bridge on the new railway line mentioned in the introduction. The total length is 490 m with the typical span 60 m. The girders were delivered in 24 m long pieces with a shop splice in the middle. The 24 m long units had a weight of up to 65 tons.

In 2007 the Swedish Code for Railway Bridges changed the fatigue spectra from 10^6 to $2{\cdot}10^6$ cycles, with the consequence that steel grades higher than S355 can not be fully utilized. This bridge was however designed in 2004 and S420 was used for bottom flanges over support and for upper flanges in mid span.

The spacing of the I-girders is 2.5 m, and the depth of the girders is L/20 = 3.0 m, which is more than would have been used for a road bridge. Since the alignment of the rail track goes from a horizontal

radius of 3,220 m at one end of the bridge to a straight line at the other end, the main girders are straight between the points 6 m from support. Since the bridge was push launched from both ends, a special adjustable hinge with vertical axis made it possible to adjust for the alignment both with and without radius. After launching the hinge was removed and the girders were welded together.

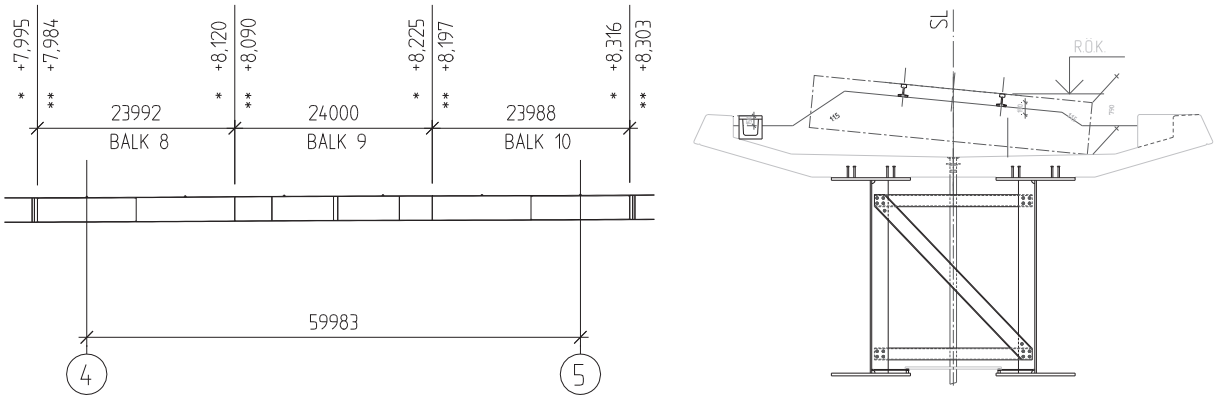

Figure 2-67: Elevation and cross section of the bridge over Veckefjärden. The cross bracings are made of channels bolted to the web stiffeners.

Figure 2-68: Picture of bridge over Veckefjärden during wintertime.

Since the temperature wintertime can fall to -30 oC, it is very practical to cover the working area with big tents, which not only makes it warmer, but also eliminate winds, rain and snow. To avoid too big differential temperatures between the steel girders and the concrete, the underlying girders are also preheated. If the steel is not heated the effect of the differential temperature will be the same as a magnified shrinkage of the concrete.

2.6.6 Special bridges

Most bridges are designed without special concerns of aesthetics. The only formal requirement based on aesthetics is that stiffeners should be placed on the inside of girders. Architects are rarely involved in bridge design except for very big bridges. Occasionally bridge owners are prepared to pay a bit extra for beauty. Beauty is in the eye of the beholder, as the saying goes, and clever choices of bridge colour and form can yield an interesting result.

In 1993, the Swedish Steel Construction Institute published ”Steel Bridges”, proposing means of making existing and planned bridges more aesthetically pleasing by means of well-planned steel alternatives. One of the most effective ideas involved replacing the usual concrete 3 span bridge with inclined legs acting as intermediate supports by a composite bridge with inclined steel legs. This type of structure is very common for highway crossings. The architects leapt at the chance to try this concept in the bridges of the Höga Kusten project.

Höga Kusten project

Figure 2-69: Bridge over E4 at Höga Kusten, Sweden.

The arch legs carry the load from the center of the bridge, and although they might as well be straight from a static point of view, the curved arch structure undeniably lends a more appealing impression, which is enhanced further by the slender dimensions of the steel. For transportation, the steel was divided into one girder over mid span, two approach girders and two curved legs.

Vallsundet

The final case concerns the 1,500 m long bridge over Vallsundet in Sweden, connecting the island Frösön with the mainland. This bridge has a box in composite action with the concrete deck. The bridge is mainly characterized by the soft vertical radius and the triangular supports under the highest point. In addition to being aesthetically pleasing, they facilitated the introduction of an extra wide span across the navigation channel.

For composite boxes, the concrete is often cast between the webs by means of trapezoidally profiled sheeting. The sheeting is placed transversely across the bridge, mounted on trestles that are braced against the box floor. The roadway cantilevers are cast using a form carriage, which is moved along rails placed on the upper flange. For shorter bridges, two casting sequences per span is adequate: first at mid span, then at supports, to minimize tensile forces in the concrete over support. In the case of longer spans, two or more form carriages can be used simultaneously.

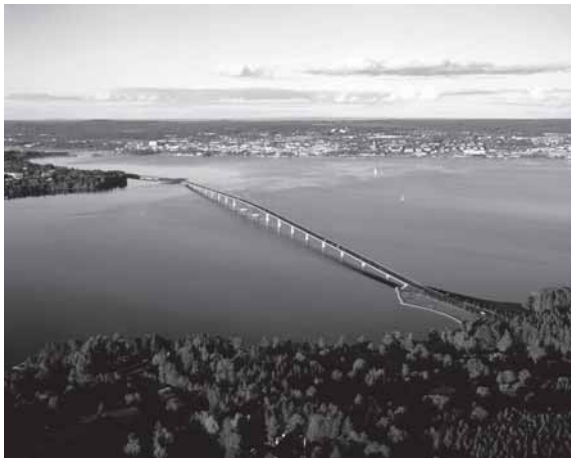

Figure 2-70: View of the Vallsundet bridge, Sweden, and the triangular supports over the navigation channel.

Figure 2-71: Casting of the concrete deck of the Vallsundet bridge, Sweden.

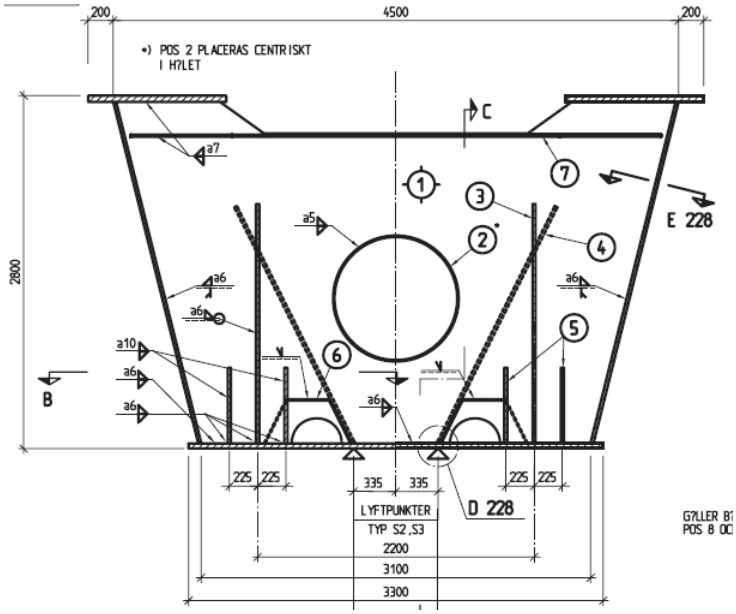

Figure 2-72: Cross section as well as details over supports for the bridge over Vallsundet, Sweden.

As shown in Figure 2-71, for casting of the concrete deck for a composite box a form carriage is used. In between the webs 45 mm deep trapezoidally profiled sheeting acts as formwork for the concrete. The plywood put on top makes it possible to transport re-bars etc before the casting of the deck.

Figure 2-72 shows the cross section as well as details over supports for the bridge over Vallsundet. The shear force and torsional moment is transmitted to the bearings by two diaphragms with t= 18 mm (pos 1). The trapezoidal stiffeners prevent the bottom flange from local buckling, and are also air ducts for dehumidified air. The inside is not painted. The inclined stiffeners (pos 4) provide lifting points for replacing the bearings.

3 Steel grades

3.1 Introduction

In Europe the most commonly used steel grade in bridge design is S355. The use of higher steel grades (S460, S690) differs from a country to another and depends mainly on national rules and experience. For instance, the steel grade S460 is quite commonly used in France and in Sweden it is the standard grade whereas in Germany its use is much more ungenerous. Besides that, it has to be noticed that the European standard EN 10025 [37] deals with steel grades up to S960 and EN 1993-1-12 [34] adds specific rules to use steel grades up to S700 when designing a steel bridge according to the Eurocodes. For composite bridge, EN 1994-2 limits the use of steel grades up to S460. Even in case of the use of S460 the bending resistance may be reduced by the β factor (see EN 1994-2, 6.2.1.2(2)). The experience is very limited for composite sections beyond grades S460 where the elastic bending resistance should be used by the time being. Moreover it should be noticed that other branches (mobile cranes, offshore structures, or shipbuilding industry) already use steel grades up to a yield stress of 1100 MPa.

In the following, the advantages and obstacles for using high strength steel (HSS) will be first discussed from the design and economic points of view. Then national trends will be illustrated through European bridge examples using such HSS. Accompanying the steel grades, quality and through thickness properties should also be specified when designing a bridge. In the future this will be performed using EN 1993-1-10 [33].

3.2 Discussions about the use of High Strength Steel (HSS) in bridge design

3.2.1 General

The increase of the steel strength can lead to material savings, and then can reduce the fabrication costs (time for welding, areas to be painted,…) and the erection costs of a bridge (less material to handle and transport, reduced weight simplifying the erection, less costs for foundations,…). The structural elements become lighter and more slender enabling special aesthetic and elegant structures. Constructions with less steel are also in good agreement with the sustainability problematic and a reduced consumption of the world's natural resources. It has been shown that HSS can exhibit not only a higher strength but also an excellent toughness and superior welding properties, so that a high safety both in fabrication and in structural design is ensured. The material savings also reduce the values of internal forces and moments in the zones surrounding the intermediate supports of the bridge. This finally leads to an increase in the competitiveness of a steel or composite bridge using HSS.

In order to study the economy of using high strength steel, an estimate of prices is needed, which is a quite intricate question. The price of structural steel usually increases with the strength, which can be seen from Figure 3-1 [44]. It shows relative prices for heavy plates from three leading European producers of high strength steel in which S235 has been chosen as reference. Figure 3-1 also shows a trend curve, which follows the square root of the yield strength. There is a substantial scatter in prices from time to time due to the market situation and the marketing strategy of the producer. The production cost increases mainly when the production process changes e. g. from TM to QT. Also the number of grades that has to be produced influences the production cost and it is a matter of strategy where to allocate these costs. An unusual example is that you can buy S355 cheaper than lower grades

in the US. Anyway, the trend curve in Figure 3-1 will be used in this study as an evaluation of probable prices.

If the strength can be fully utilised the cost of material will be lowered as the strength is increased, see Figure 3-2. The cost of a structure depends however more on costs for fabrication and erection than on the price of the material but here only the cost of material will be studied.

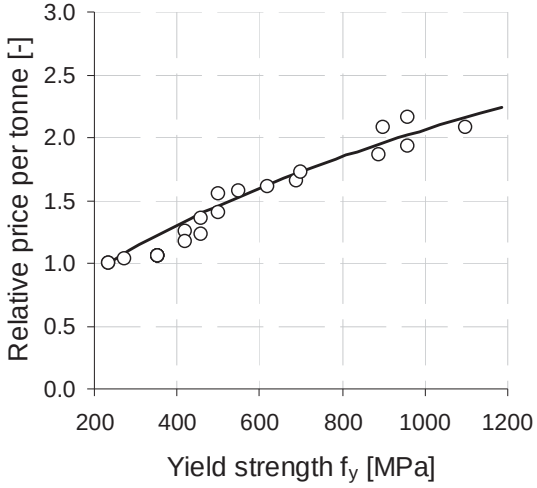

Figure 3-1: Approximate price per tonne of hot rolled steel normalised with price of S235 as function of yield strength.

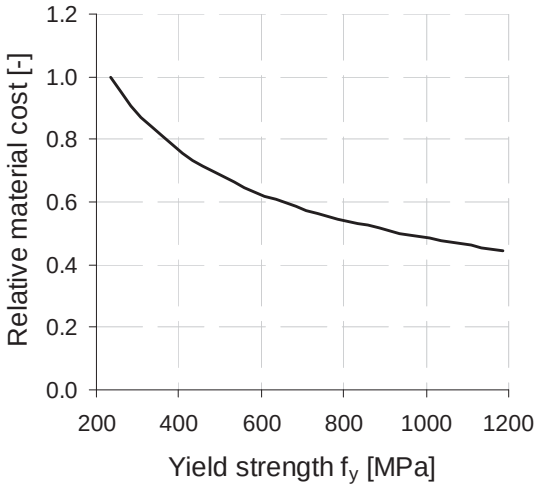

Figure 3-2: Approximate material cost normalised with the cost of S235 assuming that the strength can be fully utilised.

The conclusion from Figure 3-2 is that increasing the steel grade saves costs as long as the strength can be utilized. Limitations of utilizing the strength may be buckling (stability phenomena), fatigue and deflection limits. Thus it has been shown e.g. in [47] for composite road bridges that the benefits of HSS in application are mainly determined by the following aspects:

- **Stability.** In case of stability, critical loads are independent of the material strength so that for slender structures the use of high steel grades becomes uneconomical.

  A solution could be the use of hybrid girders, see 3.2.2 below.

- **Fatigue.** When using high steel grades, fatigue often becomes decisive because it is almost independent of the base material strength. Therefore, it is reasonable to use high steel grades in cases where the influence of fatigue is small such as large spans and/or small traffic loads as well as for areas e.g. close to interior supports. In order to increase the fatigue strength of welded structures, post weld treatment methods could be applied [25].

  It should be noticed that the fatigue loads will differ from country to country, and from road to road, depending on traffic intensity. The fatigue aspects will not be dealt with in more details within the scope of this Design Manual.

- **Deflections.** The reduction in girder dimensions reduces also the mechanical properties such as bending stiffness. This in turn leads to higher deflections, which might become a decisive design criterion. The deflection limitations vary very much between the countries, see 3.2.1.

For the typical span range of railway bridges, strict deflection limits but also fatigue issues can make high steel grades not economic because they offer no advantages in comparison with steel grades S235 and S355 [88].

3.2.2 Influence of the deflection limitations

The deflection limitations shown in Table 3-1 vary very much from country to country. The purpose of the limitation may also vary but it is believed that the comfort of drivers and pedestrians is the main reason for road bridges. For railway bridges, EN 1990/A1, A2.4.4 [28] gives detailed rules to cover comfort, vibration, deck twist, rail-wheel contact, …

The limitations are usually related to the deflection caused by the characteristic traffic load but in Spain they use the frequent combination. France has no limitation at all for road bridges and Sweden has L/400 for characteristic traffic load. This poses no problem for composite bridges with steel up to S690 for short to medium spans. Spain on the other hand has limitations that depend on the traffic intensity and structural system such that simply supported spans have stricter limitations than continuous girders. The strictest limitation L/4000 for multiple simply supported spans in a highway is so strict that it makes this system impossible irrespective of steel grade. The system is on the other hand not attractive because of the maintenance of the joints and for instance in Sweden it is not allowed at all.

For rail bridges the dynamic behaviour is of concern and especially for high speed trains it is common that a dynamic analysis is required (see EN 1990/A1 and EN 1991-2). The deflection limits for Germany and Spain in Table 3-1 are valid for normal speed trains. Spain uses deflection limitations substituting a dynamic analysis. These limitations range from L/600 to L/2400 depending on train speed and bridge span. For cases where a dynamic analysis is not required a deflection limitation can be seen as a substitute. Normally the limitations are stricter than for road bridges. The allowable deflection in Sweden is L/800, which is half of that for road bridges. Sometimes this puts a restriction on the use of higher steel grades but the fatigue is a more common limitation.

Table 3-1: Summary of national requirements and praxis for bridges.

Country	Road bridges		Railway bridges		Hybrid girders
	Highest steel grade	Deflection limit	Highest steel grade	Deflection limit	
Belgium	S355 to S460	L/700	S355	L/900	allowed but not used
France	S460	n.a.	S355	EN 1991-2, EN 1990/A1	no
Germany	S355 (higher steel grades only with a “ZiE”*)	n.a.	S355	L/600 to L/800	allowed but not used
Spain	S460	L/600 to L/4000	n.a.	L/600 to L/900	no
Sweden	S460 to S690	L/400	S355 to S420	L/800	yes

*„ZiE“ means „Zustimmung im Einzelfall“ (project-related expertise)

3.2.3 Influence of buckling and possible use of hybrid girders

The thickness of the web in a plate girder is governed by the required shear resistance. The shear resistance is governed by buckling and this is taken according to EN 1993-1-5. The web is assumed to be unstiffened except at support and the end stiffener is assumed to be non-rigid. The material cost is taken from the curve in Figure 3-1 and the relative material cost for a web with a given shear resistance is shown in Figure 3-3. There is a cost reduction for stocky webs but such are not used for plate girders. For h_w/t_w >60 the cost is independent of the yield strength. This result indicates that a hybrid girder with high strength steel only in the flanges may be cost effective. EN 1993-1-5 [31] gives rules for hybrid girders and recommends that the yield strength of the flanges should not be larger than two times that of the web. A summary of the design procedure including simplified formulae can be found in [89].

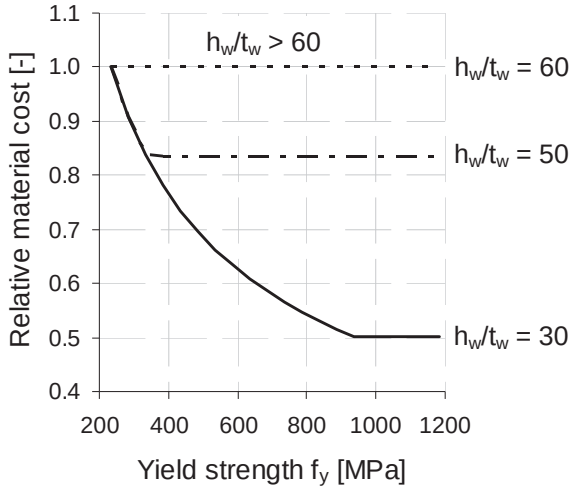

Figure 3-3: Relative material cost for web with flexible end stiffener subject to shear. Reference cost is for S235 [44].

The use of hybrid girders with this difference between the strength of flanges and web implies that the requirement that yielding should not occur in SLS is interpreted such that it applies to the flanges but not to direct stresses in the web. The local yielding in the web is limited by the elastic strains in the flanges and after the first yielding the behaviour is reversible. This reasoning is not always accepted and the interpretation may vary from country to country. For instance in Sweden the limit is set at a flange strength 1,5 times the web strength and in France it will be required that the web should not yield in SLS.

In general it saves costs to use hybrid girders and this can be demonstrated with the following example. Consider the pier section in Figure 3-4. It is designed in S460 and we will compare with an alternative with web in S355. To make the comparison fair we have to change the web in S460 with an area 17,1x2491 mm², which has a shear resistance of exactly the required 5,05 MN. A web with the same shear resistance in S355 requires an area 18,4x2491 mm². The use of a lower steel grade results in yielding of the web close to the flanges as shown in Figure 3-4. If the yield strength of the flange 430 MPa is reached in the centre of the flange the stress at the edge of the web would have been 426 MPa but it can only be 355 MPa and 71 MPa is “missing”. There is a missing triangular stress block with depth 208 mm representing a force:

$$\Delta F = 71 \cdot 0,208 \cdot 0,0184 / 2 = 0,136 \text{ MN}$$

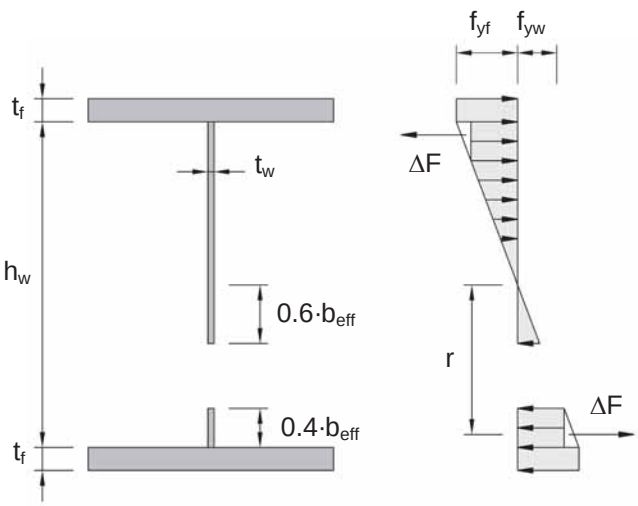

Figure 3-4: Stress distribution in the web of a hybrid girder in hogging bending.

The part of the effective web close to the flange is 322 mm so the missing triangular stress block is within the effective width. The forces represent a bending moment of

$$\Delta M = 0{,}136 \cdot (2{,}491 - 2 \cdot 0{,}208/3) = 0{,}32 \text{ MNm}$$

This has to be compensated by an increase of the flange thicknesses of

$$\Delta t = \frac{\Delta M}{f_y b_f h} = \frac{0{,}32}{2{,}54.430.0{,}9} = 0{,}33 \text{ mm}$$

This can be considered as negligible in this case.

The change in cost can be calculated considering costs for material and splices only and it is shown in Table 3-2 for the 16 m long piece.

Table 3-2: Change in cost when the web is changed from S460 to S355.

Item	Amount	Unit	Cost/Unit [SEK]	Cost [SEK]
S460	- 5,376	kg	11.5	- 61,824.-
S355	5,866	kg	9.4	- 55,148.-
Splice	1.0	h	450.0	450.-
Total [SEK]				- 6,226.-
Total [€]				- 685.-

The saving is not very big, 9 EUR/m^2 deck area, but it is a clear result and it is cost efficient to use a hybrid girder compared to a homogenous girder.

3.2.4 Conclusions

The above discussion highlights advantages and obstacles for using HSS in bridge design. It is shown that increasing the steel grade saves costs as long as the strength can be utilised. Limitations of utilizing the strength may be buckling, fatigue and deflection limits.

In order to answer the buckling limit, it has been shown that the use of hybrid girders with a web in S355 and flanges in S460 can make HSS economical even for slender structures. Finally the highest useful steel grade for bridges will vary from country to country due to traffic intensity (fatigue) and due to deflection limitations. The first is a fact of life but the second is less rational and a review of the requirements could save expenses in some countries.

3.3 Steel grades used in European countries

3.3.1 Use in France

In France, the most commonly used steel grade for bridges is S355. The risk of brittle fracture is controlled by quality selection in accordance with French standard A36-010 and the Ministry of Transport recommendation CCTG-F66. This standard defines:

- The basic grade S355N (Charpy energy of 40J guaranteed at –20°C) for thicknesses of less than 80 mm (S355 K2 is possible and generally used for thicknesses less than 30 mm),
- S355NL (Charpy energy of 27J guaranteed at –50°C) for thicknesses between 80 and 150 mm

These allowable thicknesses are those of the French regulations. In Eurocodes, they have been completely recalibrated but they do not differ too much (see EN 1993-1-10 [33] and EN 1993-2 [35]).

For bridges, the grades S420 and S460 were already permitted according to the previous French standard A36-201 (dated 1972), but only with the quality N/NL. At that time the maximum usable thickness was 50 mm, but this value has been successively increased up to 100 mm in 1984. However these steel grades were practically not used for bridges because of a very bad weldability (however, one example: 293 tons of S460N in 1979 for the Mathilde Bridge in Rouen), but rather for offshore construction. The change came in 1993 with the publication of EN 10113 and new fine grain thermo-mechanical steels (M/ML). In 1997 a French guidance book [65] facilitates the use of thermo-mechanical steel (for grades S420 and S460) for bridges in France. Table 3-4 below presents a non-exhaustive list.

Today higher steel grades (S690 and more) are not yet used for bridges in France, but a working group is currently studying all the relevant aspects, specially welding procedures, for the use of S690 and also hybrid girders.

3.3.2 Use in Germany

In Germany, the most commonly used steel grade for bridges is S355. Although DIN-Fachbericht 103 [23] deals with steel grades up to S460, the use of any steel grade higher than S355 requires a project-related expertise [3]. However, in few road bridges high steel grades up to S690 have been used already in parts of the structure especially where certain requirements had to be fulfilled, as described in Table 3-3. In general, the application of steel grades higher than S355 or even hybrid girders is not common in Germany. Table 3-3 summarises bridge examples in Germany where steel grades higher than S355 have been used.

Table 3-3: Data of German bridges with steel grades higher than S355.

Bridge	Year of comple-tion	Characteristics	Steel grade(s)	Masses [t]
Nesenbachtal	2000	Five-span continuous girder bridge with a maximum L/h-ratio of 30, which required the use of S690 in support areas	S355 J2G3 S690 QL	1341 284
Wilde Gera	2001	Arch bridge with composite box-girder	S355 S460	insgesamt: 6323
Reichenbach	2002	One-piece composite cross section with tension bands made of S460	S355 J2G3 S460 M	insgesamt: 6000
Airport bridge Ilverich	2002	Cable-stayed bridge with a main span of 287.5 m and a reduced pylon height due to the nearby airport. V-shaped pylons with a tension band made of steel grade S460 are used (for which only S355 was considered to achieve redundancy)	S355 S460 ML	7180 520

Table 3-4: Data of French bridges with steel grades higher than S355.

Bridge	Year	Characteristics	Steel grade(s)	Masses [t]
Remoulins bridge (Figure 2-1)	1993 -1994	First bridge with TM-steel, twin-girder bridge, main span 80 m, max. plate thickness 80 mm.	S 355 M S 460 ML	200 180
Highway A16	1993 -1994	Rolled beams (max. web depth about 1 m) used for the main girders of many small span bridges comprising two or more girders	S 460 M	980
Normandy bridge	1992 -1994	Cable-stayed bridge, max. span 856 m (624 m in steel), max. plate thickness for in-span cross-sections in S420M: 30 mm, use of S420M decreased the structure weight for the main span	S355/460NL S 420 M	4000 1800
Jassans-Riottier bridge over the Saône river	2000	Composite twin-girder bridge, max. span 130 m, S460M/ML around internal supports	S 460 M/ML	k.A.
Bridge of Europe in Orléans	1998 -2000	Steel arch bridge, closed steel box-girder, main span 202 m	Bogen in S460 M/ML	350
Garrigue viaduct on Highway A75	1999 -2001	Composite twin-girder bridge, max. span 74 m, max. plate thickness: 120 mm in S460ML	S460 M/ML	290
Verrieres viaduct on Highway A75 (Figure 2-2; Figure 2-28)	1998 -2002	Closed steel box-girder, connected to a concrete slab, with a main span of 144 m, flanges of the box-girder section around internal supports: from 30 to 67 mm in S460	S460 M/ML	ca. 2000
Millau viaduct on Highway A75	2001 -2004	Cable-stayed bridge, max. span 342 m, the central part of the steel box-girder section is in S460	Deck: S355 S460 M/ML Pylons: S355 S460 Provisional supports: S355 S460	23500 12500 3200 1400 3200 3200
New bridge over the Rhone in Valence	2001 -2004	Closed steel box-girder connected to a concrete slab, max. span 125 m, max. plate thickness in S460M: 60 mm	S460 M	1250

3.3.3 Use in other European countries

In Belgium S460 is allowed but in practice it is hardly used. S355 is the common grade.

In Sweden it is usually possible to use the full strength of S690 and still satisfy the fatigue rules for road bridges. The most common material is S460 and the girders are frequently hybrid with S355 in the webs. For rail bridges the fatigue requirements are stricter and the practical limit is S355 or S420 for long spans.

3.4 Through-thickness properties

The selection of materials for through-thickness properties is dealt with in Sec. 3, EN 1993-1-10 [33]. The purpose of this selection is to avoid lamellar tearing resulting from strains in the thickness direction. These strains may be produced by external forces but also by shrinkage of welds.

The susceptibility to lamellar tearing is highly related to the sulphur content, the limit of which is defined in EN 10025 [37]. It is worth noting that these limits (around 0.30%) are much higher than the content that can be achieved in modern steel making plants. Depending on what is stated in the National Annex to EN 1993-1-10 [33] and on the project specifications, two routes may be followed (separately or in combination):

- Fabrication inspection (generally by ultrasonic method)
- Specification of a Z quality in accordance with EN 10164 [38]

The second point is developed in the following for two welding details:

- Detail 1 is the connection of the 19-mm-thick web to the 35-mm-thick lower flange by two 7 mm fillet weld (single run)
- Detail 2 is the connection of the flange of the vertical T stiffener to the upper flange by two 15 mm fillet weld (multiple runs)

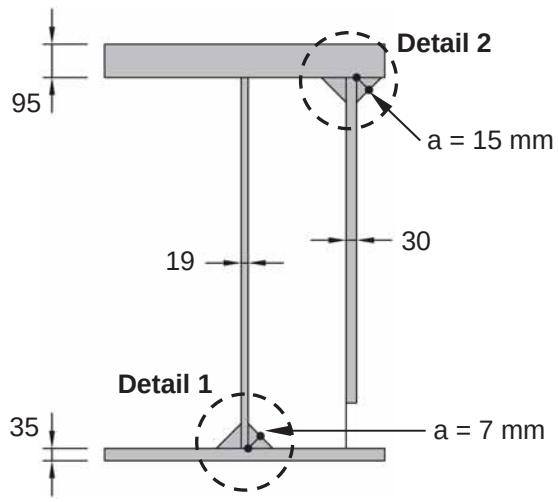

Figure 3-5: Two welding details of a twin-girder bridge. Dimensions in [mm].

In the following the different Z_i coefficients are calculated for each detail.

Detail 1

$Z_a = 3$ ($a_{eff} = 7\sqrt{2}$)

$Z_b = 0$

$Z_c = 8$ (no compression)

$Z_d = 0$ (when the web is welded to the flange, there is no restraint)

$Z_e = 0$ (assumption preheating less than 100°C)

Finally, $Z_{Ed} = \sum_i Z_i = 11$

According to Table 3.2 of EN 1993-2, a quality **Z15** is necessary.

Detail 2

$Z_a = 9$ ($a_{eff} = 15\sqrt{2}$)

$Z_b = 0$

$Z_c = 15$ (Note: this weld could be stressed in tension by traffic loads, see EN 1994-2, 6.6.1.1(13))

$Z_d = 3$ (medium restraint due to welding between the flanges of the main girders)

$Z_e = 0$ (assumption preheating less than 100°C)

Finally, $Z_{Ed} = \sum_i Z_i = 27$

According to Table 3.2 of EN 1993-2, a quality **Z25** is necessary.

3.5 Application to the calculation example “box-girder bridge“

The box-girder bridge used as example in Part I of the COMBRI Design Manual [16] has been firstly designed using S355 which lead to double upper flange plates around the intermediate supports. After discussing the use of HSS (see paragraph 3.2), it becomes interesting to re-design it and to show how the competitiveness of the bridge can be improved.

The re-design has been performed using hybrid girders with the web and the lower flange in S460. The upper flange is also in S460 except around the internal supports where the steel grade S690 has been used to avoid the additional upper plates. The quality M has been adopted for S460 whereas the quality QL1 is needed for S690. The optimization of the steel distribution has been performed with regards to normal stresses, shear resistance and interaction between shear and bending at ULS, for the sections on internal supports and for the in-span sections.

Table 3-5 illustrates the corresponding material savings which is quite significant, representing 30% of the steel quantities or 7% of the total bridge deck weight. Table 3-6 illustrates the increase in the span deflections under the characteristic traffic loads (LM1 model from EN 1991-2). This increase (25%) remains reasonable with values lower than those summarized in Table 3-1.

Table 3-5: Comparison of the steel quantities.

	Advanced design in S460/S690	**Reference design in S355**
Steel for the main box-girder (without taking the bracing frames into account)	2,470 tons	3,540 tons
S355	-	3,540 tons
S460	2,301 tons	-
S690	170 tons	-

Table 3-6: Comparison of the deflections at mid-span.

		Advanced design in S460/S690	Reference design in S355	Difference
Deflection under characteristic LM1	mid-span 1	6.7 cm = L / 1350	5.2 cm = L / 1730	+ 29%
	mid-span 2	13 cm = L / 925	10.5 cm = L / 1140	+ 24%
	mid-span 3	14 cm = L / 850	11.4 cm = L / 1050	+ 23%

As already mentioned in the discussion from Paragraph 3.2, the benefit of the 30% material savings could be counterweighted by the fact that the high strength steels are more expensive. It becomes then interesting to compare the prices of both designs. This comparison is illustrated in Table 3-7 and has been performed on the basis of the material costs only (without including the delivery, the welding, the erection…). Usually, in France for instance, these material costs represent around 30% of the global price of the steel structure. However, there is also a substantial saving in fabrication and erection due to decreased weld volumes but this has not been investigated in this comparison.

Table 3-7: Comparison of material costs.

Box-girder	Whole	Upper flanges	Bottom flange	Webs
S355	2,520,000 €	921,000 €	943,000 €	656,000 €
S460/S690	2,020,000 €	518,000 €	749,000 €	756,000 €
Difference	- 20%	- 44%	- 21%	+ 15%

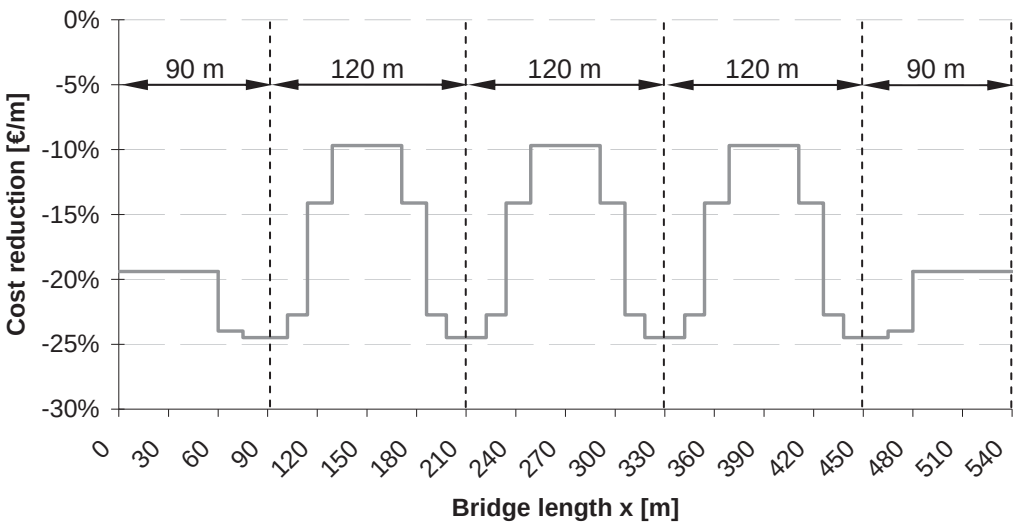

Figure 3-6: Cost reduction by re-design the box-girder bridge in S460/690 instead of S355.

It should be noticed that the S460 web is less economical than the S355 web (+15%) as the shear buckling verification does not allow an important decrease of the web thickness. At the level of the whole steel cross-section, the most significant savings (25%) are observed for the section located around the internal supports, see Figure 3-6.

Note: This result is slightly different from the conclusions in paragraph 3.2.2 for the for the following reasons:

- *The cost of S460 in comparison to S355 is slightly higher (price 2006),*
- *Vertical and longitudinal stiffeners are welded to the web.*

Finally this example shows that the use of HSS could be a very interesting option with cost savings of around 20% for the steel material supplies. Other costs for fabrication and for erection on site would also be influenced in a positive way by the use of less material.

4 Flanges

4.1 Introduction

Flanges play the most important role in the bending resistance of I- and box-girders. I-girders usually have stocky flanges so that can be fully utilised whereas in case of box-girders, their overall size determines if the flanges are longitudinally stiffened or not. For small box-girders without longitudinal stiffeners, the ultimate behaviour is basically the same as for I-girders. Therefore, Chapter 4 will focus on wide flanges, i.e. longitudinally stiffened plates under compression. The ability of code rules to evaluate accurately the carrying capacity of compression flanges has been studied in the COMBRI project, accounting for the interaction of local instabilities of subpanels and global instability of the stiffened plate. Particular attention is put on the consequences of using advanced software tools to evaluate the critical buckling stress of the system.

In case of wide flanges the shear lag phenomenon may be important in the determination of the bending resistance as it results in a non-uniform distribution of stresses across the width of the flange. For slender compression steel flanges, this phenomenon may also interact with plate buckling. A distinction between the effective width resulting from shear lag and from plate buckling is made as follows:

- "effective^{s}" denotes the effect of **s**hear lag
- "effective^{p}" denotes the effect of local and/or global **p**late buckling
- "effective" denotes the effects of shear lag and plate buckling

The effective width influences the mechanical properties of the cross section which has to be considered when calculating the internal forces within the global analysis.

4.2 I-girders

Generally flanges in I-girder are chosen to be in Class 3 or lower. If lateral torsional buckling is governing a wider flange might be favourable but the normal solution is to chose the slenderness b/t close to the limit for Class 3 and adjust the distance between cross braces such that lateral torsional buckling does not reduce the resistance.

The rules for shear lag in EC 3-1-5 may give a reduction for shear lag also for I-girder flanges. Such reduction is most likely not needed and common practice is not to check shear lag at all for I girder flanges.

For aesthetical reasons the bottom flange, which is visible, should be made with a constant width. It does not matter if the bottom flange in the sagging region is more slender than the limit for Class 3 because it is in tension. The top flange can have a variable width because it does not disturb the appearance. In the sagging region the size of the top flange will be small and governed by lateral torsional buckling during casting. In Sweden it is common to use 20x400 mm as minimum size and it is sufficient for avoiding lateral torsional buckling for medium size bridges with 8 m between the cross braces. After casting of the bridge deck the additional stresses in the top flange are small and it is usually sufficient to use S355 even if the bottom flange is of higher grade.

I-girder cross sections sometimes lead to problems caused by the wide outstanding bottom flanges when pigeons and other birds settle and nest there. Looking at old bridges and railway stations in urban areas, one can imagine that this is not only an aesthetical problem but also a matter of corrosion because the birds' dirt reduces the reliability of the corrosion protection significantly in the long run. Therefore, a

significant effort is undertaken for cross-sections today to protect these areas by steel gratings or meshes. Another solution is to weld inclined plates between web and flanges as shown in Figure 4-1. As these inclined plates become fully load-bearing, they are subject to the same execution standards for the welds. However, at the detailing points the geometry is complex and difficult to weld. Moreover, the inspection of welds is not possible anymore for the web-flange connection. For these reasons, steel gratings and meshes should be preferred for protection from birds.

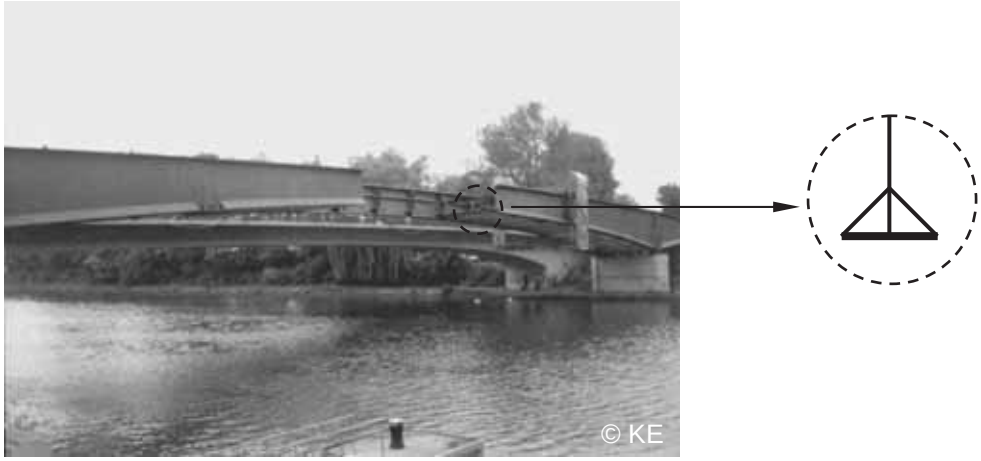

Figure 4-1: I-girder with inclined flange plates at the bottom flange.

4.3 Bottom plate of box-girders

4.3.1 General

As already stated box-girders are only economic in special cases for instance in curved bridges. For road bridges it is common to make the webs inclined. Beside aesthetic reasons this practice leads to a more favourable cross section geometry of the box-girder in terms of the bottom plate widths. Whereas for the bridge deck a wide distance between the top flanges is more favourable, it is usually the exact opposite for the bottom flange. One reason is to avoid longitudinal splices in the bottom flange. For continuous girders the bottom flange suffers local buckling at the piers and for that reason a narrower flange gives a smaller width to thickness ratio. The effect of shear lag is another reason for choosing a narrow flange. The inclination of the webs can be up to 30-40° and it is limited by the increase of the width of the web plate.

In spite of a possible web inclination bottom flanges of box-girder are usually so wide that shear lag is significant in the serviceability limit state according to rules given in EC3-1-5. For the ultimate limit state limited plastic deformations may be allowed, which limits the effect of shear lag, see EC3-1-5 section 3.3.

4.3.2 French practice

In France, for the large bridges built since 1995, the box-girder bottom flange longitudinal stiffeners are either flat stiffeners, or trapezoidal stiffeners, or T-shaped stiffeners. The stiffeners are continuous along the whole bridge.

For the flat and T-shaped stiffeners, classical transverse spacing is around 0.6 m, but no more than 1.0 m. The lower transverse width of the trapezoidal stiffeners is in most cases between 400 and 600 mm, like the clear distance between two trapezoidal stiffeners. The bracing frames longitudinal spacing is usually between 4.0 and 5.5 m.

Two pictures of typical bottom flanges stiffeners are given in Figure 4-2 and 4-3:

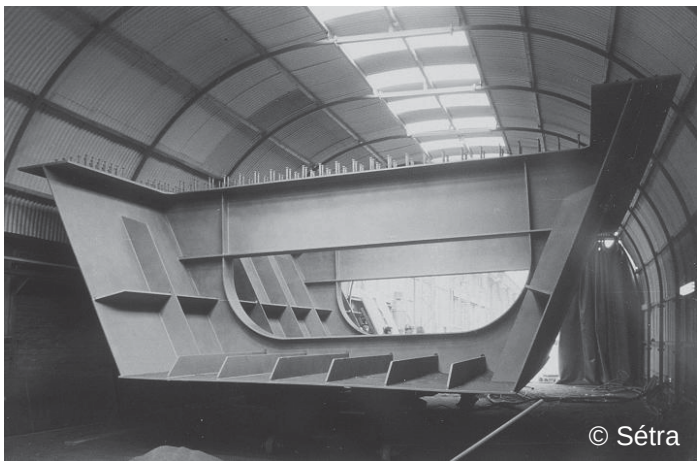

Figure 4-2: Box-girder with open stiffeners, Lille, France.

Figure 4-3: Box-girder with closed stiffeners, Millau viaduct, France.

4.3.3 German practice

In Germany, bottom plates of steel and composite box-girders are designed according to the design requirements given in the Eurocode-based "DIN-Fachbericht 103" [23]. Unlike for orthotropic decks, the code gives no direct recommendation concerning the design and detailing of longitudinal stiffened bottom plates. The design of the plate is only restricted in terms of the static requirements of the plate, such as its buckling resistance. No specific recommendation concerning the size and number of stiffeners is given.

Common practise in Germany for road bridges is the use of trapezoidal stiffeners with Class 1-3 cross-sections with typical heights and thicknesses of about $h_{st} = 200 \div 300$ mm and $t_{st} = 6 \div 10$ mm. So far the use of bigger stiffeners with Class-4 cross-sections is quite uncommon in Germany and only used for very big bridges. Flat stiffeners with class-1 cross-sections are used as well, but mainly for rail way bridges.

A sketch of a typical cross section of a German composite box-girder bridge is given in Figure 4-4. The distance between cross-bracing frames usually is between 3 and 5 m.

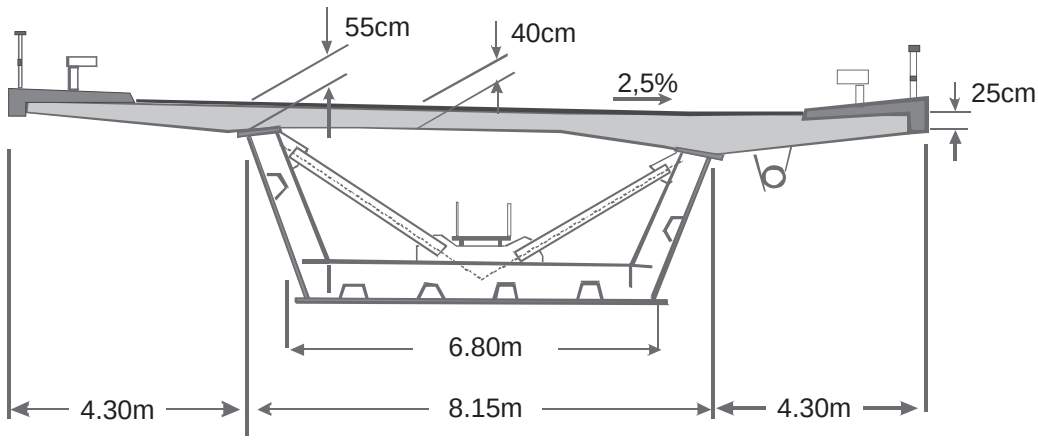

Figure 4-4: Typical cross-section of a German composite bridge with box-girder and trapezoidal stiffeners [39].

4.3.4 Swedish practice

Box-girders are used occasionally in Sweden for road bridges as well as rail bridges. For road bridges the trapezoidal shape shown in Figure 4-5 is common. The stiffeners on the bottom flange are usually fairly large cold formed trapezoidal profiles. It is common not to paint the inside of the box but instead

to provide dehumidifying. The trapezoidal stiffeners can then be used as air ducts in order to spread the dry air uniformly in the box. There is also a requirement that the concrete slab should be protected from excessive drying. This can be done with a steel plate on the top of the box. It is usually a trapezoidally corrugated sheet that also serves as lost form work and it creates a closed box during the erection of the bridge. This is essential for preventing lateral torsional buckling. The shear centre of the open box is well below the bottom of the box and a buckling mainly consisting of rotation around the shear centre gives usually a very low critical load. Therefore the box has to be closed during erection or launching. Note that the stiffness of such sheeting is essentially influenced by its connections and it is much smaller than that of a solid steel plate with the same thickness. Another solution is to provide a lattice between the top flanges but this is more expensive and it is only used when the strength of a trapezoidally corrugated sheet is insufficient.

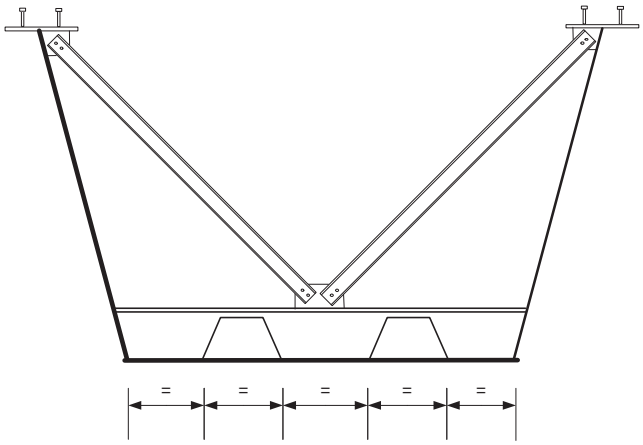

Figure 4-5 Box-girder with trapezoidal stiffeners on the bottom flange.

4.3.5 Conclusions and design recommendations

The common practice for design of longitudinal stiffened bottom plates is still quite different in different European countries and is influenced by the specific construction techniques and traditions. General recommendations concerning number and size of stiffeners are hard to give as they are dependent on many factors, e.g. the distance between the diaphragms. Focusing on the static requirements of the bottom plate, the following conclusions and recommendations based on the Eurocode design rules and the outcome of the COMBRI research project can be given:

1. Stiffeners are almost always needed on the bottom flange of continuous bridges because the drop-off in resistance with increasing slenderness is quite sharp.
2. For an adequate stiffening of the bottom plate with open stiffeners the stiffeners have to be designed to avoid tripping. The rules for a general case are given in EN 1993-1-5 and they are intended to ensure Class 3 behaviour. The rules are quite severe for flanged stiffeners as T or L shapes. In order to fulfil them the critical torsional buckling stress usually has to be calculated considering the restraint from the bottom flange plate. As an alternative closed stiffeners can be used and they may even be Class 4 stiffeners if local buckling of the stiffeners is taken into account.
3. In case of stiffened plates an appropriate numerical simulation leads to higher and more accurate critical buckling stresses than hand-calculation methods. A convenient tool for the determination of all kinds of critical buckling stresses of stiffened plates is EBPlate developed within the scope of this project, see [26].
4. The torsional rigidity of the stiffeners may be taken into account, which leads to even more beneficial results compared to hand calculation methods, especially in case of large trapezoidal stiffeners. The mentioned program EBPlate gives the critical buckling stress considering the torsional stiffness and cross sectional distortion of the stiffeners.
5. Due to the mechanical model behind the calculation procedure of the EC3-1-5 design rules, the use of very weak stiffeners leads to unsafe results. The effect of unsafe results becomes less

relevant with increasing number of stiffeners. Only stiffeners with a minimum rigidity $\gamma^L \geq \gamma^{L*}$ should be used where γ^{L*} is the relative stiffener rigidity, which raises the global plate buckling stress $\sigma_{cr,p,global}$ up to the level of the local buckling stress $\sigma_{cr,p,local}$, thus $\sigma_{cr,p,global} \geq \sigma_{cr,p,local}$. The exact value has to be determined for every specific cross section. A good approximation for the pre-design the required minimum stiffener rigidity can be assumed to be $\gamma^{L*} = 25$ in case of open stiffeners and $\gamma^{L*} = 50$ in case of closed stiffeners.

6. The slenderness of the sub-panels at which reduction starts is $b/t = 42 \cdot \varepsilon$. The reduction is quite steep when this limit is passed and it is often favourable to stay below this limit. This can be achieved conveniently with large trapezoidal stiffeners as shown in Figure 4-5.
7. Large stiffeners do have the advantage of allowing a larger distance between the cross braces or diaphragms, if there are no restrictions from other cross-section members e.g. the top-flange.

4.4 Double-composite action

4.4.1 General

The expression double composite action refers to a girder with two composite flanges connected with steel webs. The basic driver is that concrete is cheaper than steel when it comes to carry compression. Starting with a normal composite bridge with a concrete slab on top of the girder serving as deck and flange a concrete slab may be added to the lower flange in areas where it is in compression. In large span box-girders this has been used in Germany. In addition to add area to the bottom flange the concrete can also be used to prevent local buckling of the flange.

Another application of double composite action has been used in France, which can be described as a prestressed concrete bridge with a steel web. In order to avoid that too much of the prestressing is lost to the steel the web has to be flexible in the axial direction.

The use of double composite started quite recently and the technique is not yet fully developed. Experiences from France and Germany are described below and finally recommendations for design and erection are given.

4.4.2 Use in France

In France, for railway bridges, a lower concrete slab is sometimes added between the two lower flanges, but this design is not current. This lower slab is connected to the main webs using horizontal studs, and sometimes to the upper face of the lower flanges. However, the slab segments are only added in the zones surrounding the intermediate supports, where they are in compression. Moreover, the transverse joints are not concreted between the different slab segments, so that they don't really perform a double composite action, see Figure 6-4.

This design ensures a better torsional behaviour of the bridge deck, a reduction in the noise emission (particularly important for high speed train lines) and an improvement of the dynamic behaviour of the bridge. It is also used to prevent the local buckling of the lower flange in compression in the zone surrounding the internal supports.

4.4.3 Use in Germany

In Germany, some box-girder bridges have a concrete bottom slab. These bridges are often haunched in the longitudinal direction and have a so-called double-composite cross section at the supports [46]. The general characteristics of such bridges are:

- **Stiffness.** Internal forces are attracted by the double-composite cross section due to its stiffness which leads to an increase of bending moment at the supports and a reduction at mid-span.

- **Stability.** The transfer of forces from the steel bottom flange to the concrete bottom slab reduces the steel flange thickness and increases the buckling resistance of web and bottom flange.
- **Construction.** The layout of the transition zone between steel and composite cross section is complex especially with regard to longitudinal stiffeners, cross frames and reinforcement.
- **Erection.** The erection time is increased because the reinforcement has to be placed through the steel cross frames and additional concreting phases are necessary near the supports.

As bridges with double-composite action represented a new constructional type in Germany in the mid-1980s, accompanying research projects have been carried out with regard to three bridges which have been built between 1987 and 1995: the Inn river bridge Wasserburg, the Elbe river bridge Torgau and the Mosel river bridge Bernkastel-Kues. In the following their characteristics and the outcomes of the research projects are summarised on a bridge-by-bridge basis, see also [62], [63].

Inn river bridge Wasserburg. This is a steel-box-girder bridge with a constant depth, which has a concrete top slab prestressed in the transverse and longitudinal direction. The concrete bottom slab has a length of 20.38 m at each side of the pier, which corresponds to 0.25 and 0.20-times of each span length. The slab thickness starts at 20 cm and increases over a length of 16.65 m to 65 cm and then to 200 cm. The cross girders at the bearings are made out of concrete. An elevation is shown in Figure 4-6.

Elevation

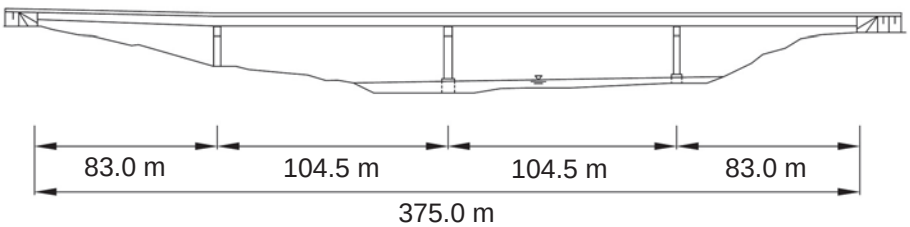

Figure 4-6: Elevation of the Inn river bridge Wasserburg, Germany, 1987.

Strain measurements during construction showed a nonlinear stress distribution in the steel bottom flange especially at the supports with high stress concentrations close to the webs. The deviation of the measurement with regard to the calculated distribution was about 43% at the supports and diminished with increasing distance from the pier axis. However, fatigue of the highly stressed studs was suspected. In the frame of the research project an approximate method was developed in order to determine the shear stress distribution in the composite interface. As a result the steel webs transfer 79% of the shear directly into the concrete chord whereas only the remaining 21% are transferred by the steel bottom flange. It was shown that the concrete chord dominates the shortening behaviour and thus influences the steel bottom flange, which was opposite to the expected behaviour. This leads to this unexpected load distribution of the stud shear connectors. However, the cross frames contribute to a load transfer in the middle of the bottom flange. The cross frames and transverse stiffeners have the positive effect that they transfer about 60% of the shear forces whereas only 40% are carried by the studs.

Besides that cracks were detected in the concrete cross beams at the interior supports during a load test in 1989. It was suspected that a repeated traffic loading and changing of the crack width may lead to fatigue and corrosion of the reinforcement. As a result, measurements were conducted in 1996 under normal traffic in order to check the crack widths. Almost no increase could be observed, which was related the fact that the loads were different (load test vs. normal traffic) and the crack widths increase over-proportionally. The measured tensile strains were unexpected in an area were usually compression forces prevail. However, due to the high shear and bending stiffness of the concrete bottom chord in comparison with the steel webs, a partial bending moment in the concrete chord occurs, which is not negligible any more.

Elbe river bridge Torgau. This is a haunched steel-box-girder bridge, which has a concrete top slab without prestressing. The concrete bottom slab has a length of 21.25 m in the large span and 23.75 m in the short span close to the pier with haunch which corresponds to 0.20 and 0.37-times of each span

length. The slab thickness starts at about 50 cm and increases to 90 cm at the pier axis. The cross girders at the bearings are made out of steel. An elevation is shown in Figure 4-7.

Elevation

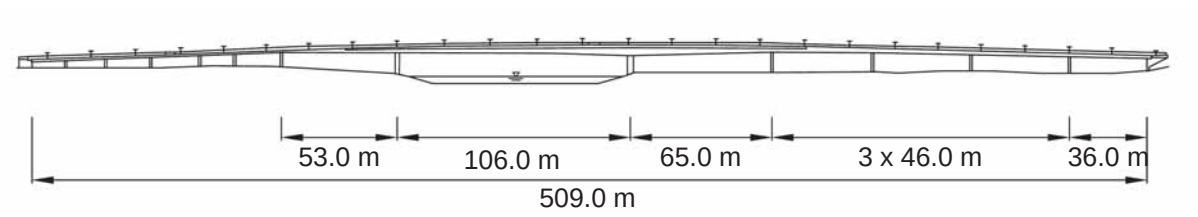

Figure 4-7: Elevation of the Elbe river bridge Torgau, Germany, 1993.

For the Elbe river bridge Torgau, outcomes of the Inn river bridge Wasserburg were considered. Thus, the offset of the neutral axis between steel and composite bottom flange has been taken into account more precisely and the carding moments (bending moment due to the different locations of the neutral axis of the steel section and the composite section) were resisted by a pair of forces, which is provided by studs located at the adjacent webs of the cross frames.

First measurements on the bridge showed that the concrete bottom slab is fully effective. However, it was surprising that the concrete top slab was not fully cracked as originally assumed so that this higher stiffness added to the distribution of the internal forces. Measurements in 1995 showed that the concrete bottom slab is still fully effective. It is observed that the hogging moment at the supports was not reduced as expected but that the mean shear forces between steel and concrete bottom chord were decisively smaller.

Mosel river bridge Bernkastel-Kues. This is a haunched steel-box-girder bridge with two boxes, which has a concrete top slab prestressed in the longitudinal direction. The concrete bottom slab has a total length of 28.6 m at the piers, which leads to a double-composite cross section of 0.42 and 0.18-times of outer and inner span length. The slab thickness reaches to 50 cm at the pier axis. The cross girders at the bearings are made out of steel. An elevation is shown in Figure 4-8.

Elevation

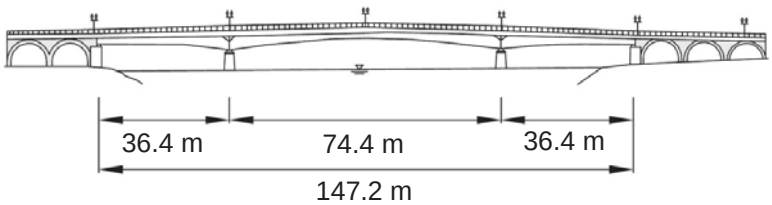

Figure 4-8: Elevation and longitudinal section of the Mosel river bridge Bernkastel-Kues, Germany, 1995.

The aim of the accompanying research project was mainly to enhance the knowledge of the in plane composite action to strongly haunched girders. The measurements at the bridge showed that the haunches act positively with regard to shear and stud forces.

The outcomes of the research projects on the aforementioned bridges have greatly influenced the design and construction of later bridges with double-composite action in Germany. A well-known example is the Inn river bridge Neuötting with a main span of 154 m, which was completed in the year 2000, see Figure 4-9 and [12], [50]. The haunched girder has a concrete top slab without prestressing. The concrete bottom slab has a length of 50 m and 40 m above the left and the right river piers with a variable thickness of 40 cm at the beginning of the concrete chord and up to 120 cm at the piers.

Table 4-1 gives an overview on the most prominent bridges with double-composite action which have been built in Germany.

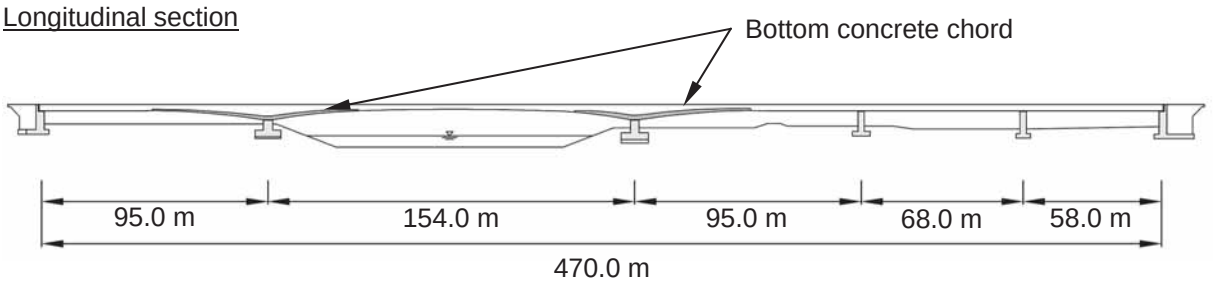

Figure 4-9: Longitudinal section of the Inn river bridge Neuötting, Germany, 2000.

Table 4-1: Data of bridges with double-composite action in Germany.

Brücke	Year of completion	Total length [m]	Spans [m]	Deck area [m^2]
Inn river bridge Wasserburg	1987	375	83-104.5	5,156
Elbe river bridge Torgau	1993	395	36-106	5,925
Main river bridge Nantenbach	1994	374.4	83.2-208	5,354
Mosel river bridge Bernkastel-Kues	1995	147.2	36.4-74.4	1,766
Elbe river bridge Meißen	1997	330	36-108	6,943
Inn river bridge Neuötting	2000	470	58-154	13,865
Havel river bridge Plaue	2002	240	35-70	3,180

4.4.4 Conclusions and design recommendations

In the following the state-of-the-art knowledge on double-composite action as a result of the various research projects mainly in Germany is summarised:

- **Conceptual design.** The concrete bottom slab should be placed in the negative bending moment region so that only compression forces occur. It should begin approximately at the zero points of the moment distribution in order to reduce the forces that need to be transferred from the steel plated elements to the concrete chord at the changing of the cross-sectional type.
- **Global analysis.** A double composite girder without longitudinal prestressing of the concrete upper slab can be designed like a common composite girder considered upside-down. In case of a longitudinal prestressing of the concrete upper slab, the influence of the concrete chords due to creep and shrinkage has to be considered. In [43] the mutual influence of creep and shrinkage in case of longitudinally prestressed composite upper slabs has been studied.
- **Internal force distribution between steel box-girder and concrete bottom slab.** Double-composite structures cannot be calculated on the basis of Bernoulli's hypothesis because partial

interaction occurs in multi-layer beams in case of a flexible connection, which cannot be neglected. As a result these girders show a nonlinear stress distribution over their depth, which has to be taken into account in the calculations. In [40] these effects have been discussed and enhanced to dynamic problems.

- **Load transfer between steel girder and concrete bottom slab.** It has to be taken into account that due to the offset of the neutral axis carding moments occur, which should be resisted by studs which are located at the webs of the cross frames.
- **Shear stress distribution in plane composite action.** For the connection between concrete chord and steel plated elements usually stud shear connectors are used. Their placement is characterised by two main areas. In the transition zone between steel bottom flange and concrete chord, the studs are equally distributed over the whole bottom flange width and the distribution of forces is determined according to axial stiffness of the steel and concrete sections. In the other parts of the steel bottom flange, the studs are mainly provided at the flange areas close to the web because a highly nonlinear stress distribution exists and the studs which are located at the webs carry more load than those of the bottom flange. In [64] the shear stress distribution in plane composite action has been studied. Design rules are given in Section 9 of EN 1994-2, which favours a concentration of the studs close to the webs.
- **Stud shear connectors.** In contrast to the common headed stud layout, the studs at the web, which have a horizontal arrangement with a short distance to the concrete surface have a reduced resistance, as well static as fatigue. In [8] these topics have been addressed and design rules are given in Annex C of EN 1994-2 [36]. Because of the stress distribution the shear connectors are concentrated to an area close to the webs. In the interior part of the flange, where a restraint from the shear connectors is relied upon to prevent local buckling of the steel element of a composite plate in compression, the centre-to-centre spacings of the connectors should not exceed the limits given in paragraph 9.4(7) of EN 1994-2.
- **Construction.** For the dimensioning of the steel bottom plate the concreting of the chord is decisive. Thus, the concrete is often applied in several layers to generate already a partial composite action for the successive concreting layers. A general question arises whether the steel plate is a very expensive formwork. Depending on the labour or material cost, one will choose rather a thick plate with as few longitudinal stiffeners as possible or a slender plate, which is longitudinally stiffened to resist the weight of the fresh concrete. If the bridge is erected by launching and the concreting is done before launching the bottom plate can be propped and longitudinal stiffeners can be avoided also for thin plates.

5 Webs

5.1 Introduction

In Section 4 the flanges as part of the cross section were discussed separately, because they represent a substantial element to reach the required bending moment resistance. Webs are equally important, if it concerns to shear force resistance. Besides that, they have the task to interconnect the flanges. The webs thickness is mainly chosen on basis of the required shear force resistance. For steel plated structures large heights and plate slenderness occur so that the stability behaviour of the web must be usually considered.

For the stiffening of the web both longitudinal and transverse stiffener can be used. A transverse stiffener has mainly influence on the shear force resistance of the web. This is however only the case if the distance between the transverse stiffeners is small, otherwise the influence is low and it does not justify the costs of the transverse stiffener. Different design aspects of transverse stiffeners are discussed in Section 5.2.

Longitudinal stiffeners increase not only the bending moment resistance but also the shear force resistance of the web. It is however interesting, from which web height on a stiffening should be used at all. The economy of longitudinal stiffeners is studied in Section 5.3.

In Section 5.4 the possibilities of the cross sectional layout of longitudinal stiffeners are presented briefly and their practical application in different countries is described. Aside the typical arrangements there exist also specific layouts for longitudinal stiffener, e.g. discontinuous longitudinal stiffeners and exterior longitudinal stiffeners where the transverse stiffener is located on the opposite (usually inner) side of the web plate in order to avoid the complicated intersecting detail between longitudinal and transverse stiffener.

5.2 Transverse stiffeners

Transverse stiffeners are usually placed at the locations of cross bracings or diaphragms. This gives the stiffeners a double purpose of stiffening the web and to serve as brackets for cross bracings. The cross bracings are needed to prevent lateral torsional buckling during erection and in the pier regions also during service. The effect of the transverse stiffeners on the resistance of the girders is limited to an increase of the shear buckling resistance if the web does not have longitudinal stiffeners. The increase in shear resistance makes it possible to reduce the web thickness, which saves some cost. This is however counteracted by an increase of the cost of stiffeners and comparisons show that there is no net saving. The first conclusion is that it does not pay to add stiffeners between the cross bracings. In old codes there were rules giving maximum spacing between vertical stiffeners. However, there is no rational ground for such rules and there are no such restrictions in EN 1993-1-5 except that vertical stiffeners are needed at the supports. Therefore the second conclusion is to take away redundant vertical stiffeners completely and use small brackets for fixing the cross bracings as shown in Figure 6-13. This may be suitable in the sagging region of small and medium span bridges. For large spans it may be advisable to add a horizontal beam at the top as well.

Vertical stiffeners are either flat stiffeners or T-shaped stiffeners. When they are included in a bracing frame, T-shaped stiffeners may be provided and the cross-girder is welded on the flange of the vertical stiffener. If a vertical stiffener is added between two bracing frames, it is usually a single flat plate.

For the T-shaped stiffeners, the web and the flange of the stiffeners are welded on the main girders upper flange. In span, the flange of the vertical T-shaped stiffeners has a V-shaped cut-out for fatigue reasons, and so is not welded on the main girders lower flange, see Figure 5-1 . At supports, the vertical T-shaped stiffeners are very often duplicated outside the main girder and the T section is entirely welded on the lower flange.

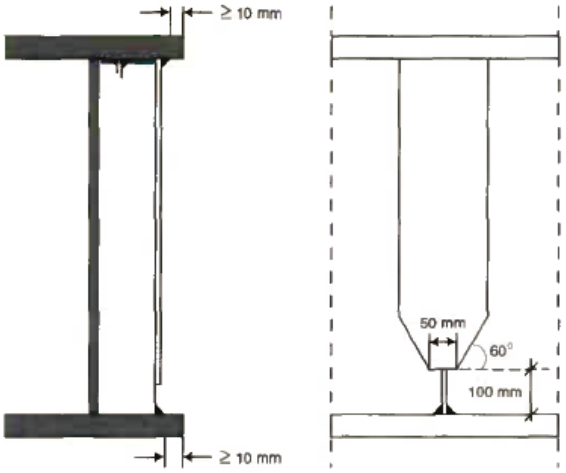

Figure 5-1 T-shaped vertical stiffeners.

Vertical stiffeners are mostly present at each bracing frame location. These bracing frames are usually spaced by 6.0 to 10.0 m for girder bridges, and by 4.0 to 5.5 m for box-girder bridges. Around the intermediate supports, some vertical stiffeners may be added in order to limit the aspect ratio *a/b* of the first web panel to better resist shear buckling. As mentioned above an alternative is to increase the web thickness.

It is useful to note that EN 1993-1-5 requires that, in case of changes in the plate thickness of the web, the transverse welded splice should be close enough to a transverse stiffener (if this requirement is not fulfilled, effects of eccentricity need to be taken into account). This may have consequences on the positioning of the stiffeners, in relation with the optimisation of the plate thicknesses.

In addition to plate buckling rules, EN 1993-1-5 gives also recommendations for the verification of the stiffeners themselves. Transverse stiffeners should be able to carry deviation forces from the adjacent compressed panels and be designed for both appropriate strength and stiffness. For the verification, the stiffener should be considered as a simply supported beam with initial sinusoidal imperfection, according to the static scheme given in Figure 5-2, assuming that the adjacent stiffeners are rigid and straight.

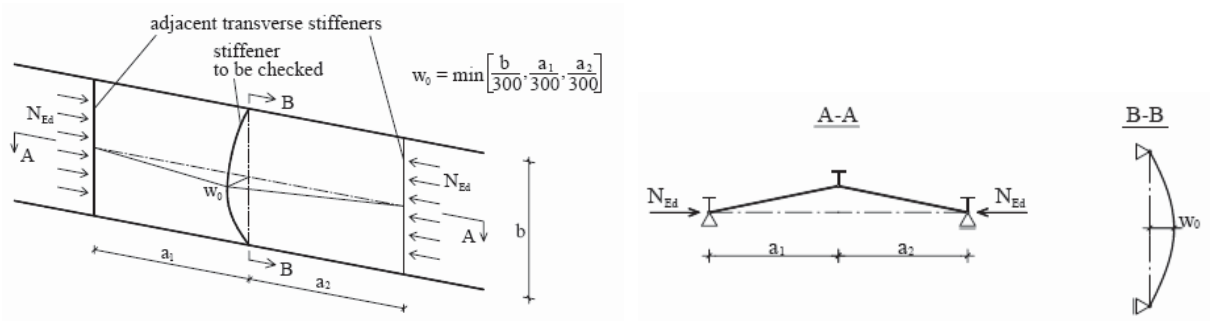

Figure 5-2: Static scheme for the verification of stiffeners.

In principle, based on a second order elastic method analysis, both the following criteria should be satisfied at the ultimate limit state:

- the maximum stress in the stiffener should not exceed f_y/γ_{M1}
- the additional deflection should not exceed $b/300$

Any relevant load acting on the stiffener should be included, such as for example axial force in the stiffener due to directly applied external forces or horizontal transverse loading of the stiffener due to in-plane curvature of the girder. In the most general case, a transverse stiffener may be loaded with:

- Transverse deviation forces originated from longitudinal compressive force or bending moment of the adjacent panel;
- External transverse loading in the horizontal direction;
- Axial force in the stiffener coming from vertical transverse loading on the girder;
- Axial force in the stiffener coming that may develop from buckling in shear, see 9.3.3(3) of EN 1993-1-5.

For some of these situations (transverse deviation forces with or without direct axial forces in the stiffener), EN 1993-1-5 proposes equivalent rules based on inertia criteria or on equivalent linear analysis EN 1993-1-5, 9.2.1 (1) to (7) [31].

Detailed information on these requirements can be found in reference [45], as well as a comprehensive worked example of a plate girder, including the verification of the transverse stiffeners.

Moreover, EN 1993-1-5 requires that the torsional buckling of stiffeners is prevented. To this purpose, two criteria are given for cases where the warping stiffness is considered or not. Chapter 3 of the COMBRI background document [68] dealing with the "Design of bracing frames for a twin-girder bridge" shows an example of the use of these criteria.

Besides acting as a bearing stiffener resisting the reaction force at the support, a rigid end post should additionally be designed as a short beam, with a length being equal to the web depth, resisting the longitudinal membrane stresses in the plane of the web. A rigid end post should comprise two double-sided transverse stiffeners that form the flanges of the short beam, with a minimal cross-sectional area and a maximal distance between both stiffeners. Alternatively, a rigid end post may be realised by inserting a hot-rolled section. If the end post cannot be considered as rigid, a reduced shear resistance of the end panel must be calculated according to Section 5 of EN 1993-1-5, see Figure 5-3

It has been showed in the COMBRI research project that, for webs with closed longitudinal stiffeners (i.e. trapezoidal stiffeners) welded to the transverse stiffeners, the latter could be considered as rigid end posts, even if not fulfilling the above conditions. This possibility is however not included in EN 1993-1-5.

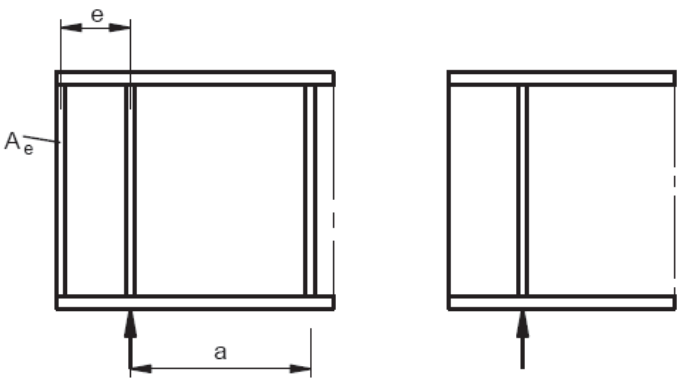

a) Rigid end post. b) Non rigid end post.

Figure 5-3 Rigid and non rigid end post.

Intermediate stiffeners that act as rigid supports at the boundary of inner web panels shall be checked for strength and stiffness, following the procedure described previously. Further minimum stiffness requirements are also given by EN 1993-1-5 for the intermediate transverse stiffeners to be considered as rigid. If the relevant requirements are not met, transverse stiffeners are considered flexible and their actual stiffness may be considered in the calculation of the shear buckling coefficient k_τ. However, no information is given in EN 1993-1-5. Thus appropriate software should be used, such as EBPlate, developed in the frame of the present project.

Although EN 1993-1-5 is not clear on this point the rules presumes that the transverse stiffeners has a function that increases the resistance. Concerning longitudinal compression this is the case for a web with longitudinal stiffeners. For an unstiffened web the wave length of the buckles caused by direct stress is usually so small that no increase in the resistance is taken into account. In such a case the above criteria are not relevant for a web without longitudinal stiffeners. However, if the stiffener carries direct or transverse load or if it causes an increase in the shear resistance the effect of the longitudinal compression should be taken into account. These rules are in most cases over-conservative and they are also a good reason for not using transverse stiffeners unless needed for a specific purpose of which increasing the shear resistance is not a good one.

5.3 Transition between unstiffened and longitudinally stiffened webs

In the COMBRI research project a 2.8 m deep I-girder bridge was studied and designs with and without longitudinal stiffeners were compared [15]. The designs for one internal span are shown in Figure 5-4.

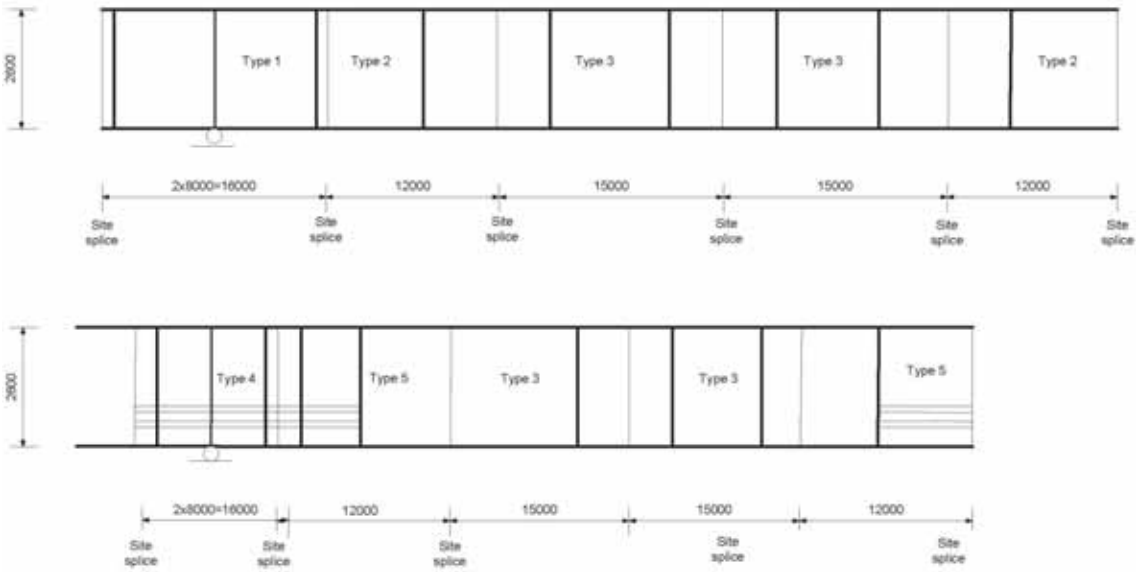

Cross section	Top flange	Bottom flange	Web
Type 1	51x900	58x900	18x2491
Type 2	26x700	40x700	16x2534
Type 3	20x400	23x700	13x2557
Type 4	53x900	56x900	15x2491
Type 5	30x700	36x700	14x2534

Figure 5-4: View of girder without (top) and with longitudinal stiffener (bottom), not to scale. List of material with all plates in S460.

The two designs have the same cross section in the span and if the cost difference is attributed to the parts that are different, it corresponds to a cost increase of 18 EUR/m2 of bridge deck for the alternative with longitudinal stiffeners. It is less than 2% of the total cost of the bridge and about 4% of the cost for the steel girders. Even if the difference is small it is a clear result in favour of the design without longitudinal stiffeners. This is also consistent with the current Swedish practice not to use longitudinal

stiffeners for girders up to 3.2 m web depth. The figure is not exactly the break even, which may vary from case to case. The actual reason for this limit is that this is the widest plate manufactured in Sweden and Finland and in order to avoid a longitudinal splice this depth is kept even if a deeper girder would require less material.

The above conclusion is related to the use of effective widths for the design of Class 4 sections. The effective width method has been allowed in Sweden since 1988, however with stricter limitations for web breathing than those in EN 1993-2. EN 1993-1-5 gives two methods for the design of Class 4 sections. One is the effective width method used in the above study and one based on stress limitations without redistribution of stresses given in Section 10. If the latter is applied the alternative with longitudinal stiffeners would be more or less all right (not checked in detail) but the alternative without would be quite impossible. For the pier section the web thickness has to be roughly doubled (from 18 to 36 mm) in order to avoid reduction of the compression stresses because of web buckling. The flange could then be made smaller but the increase in weight would still be substantial and the alternative would be uneconomical.

In order to find a limiting depth at which unstiffened webs are no longer economical, the COMBRI research project was extended, and another (imaginary) bridge with deeper spans has been designed. The designs for one internal span are shown in Figure 5-5.

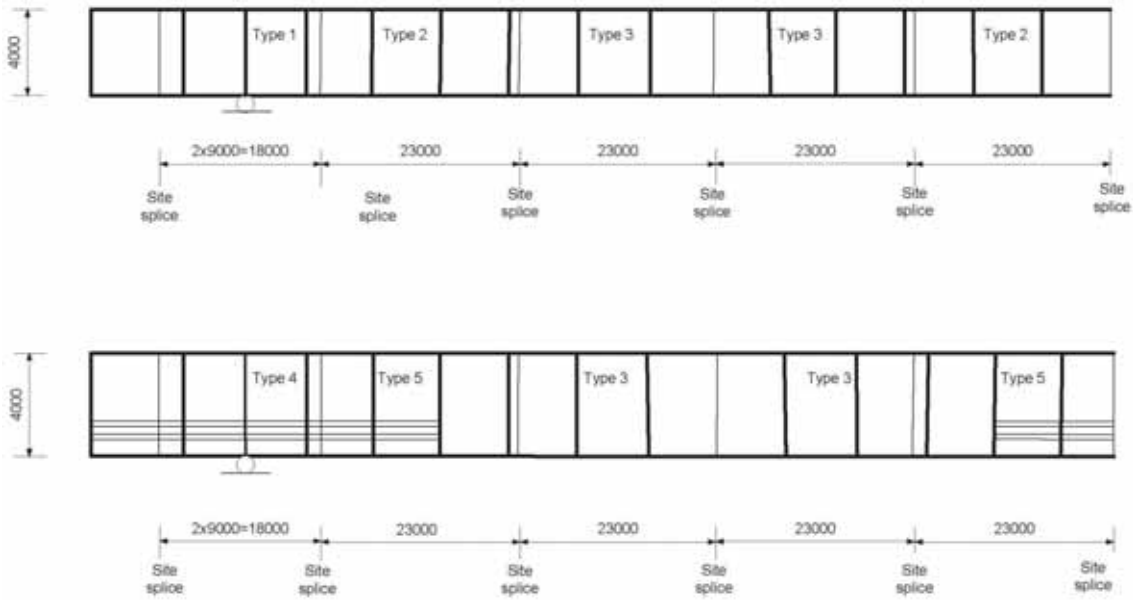

Cross section	Top flange	Bottom flange	Web
Type 1	77x1150	86x1150	24x3837
Type 2	55x1000	57x1150	22x3888
Type 3	43x600	55x1150	17x3902
Type 4	80x1150	80x1150	21x3840
Type 5	55x1000	54x1150	19x3891

Figure 5-5: View of girder without (top) and with longitudinal stiffener (bottom), not to scale. List of material with flanges in S460 and webs in S355.

This comparison is made for a 4 m deep I-girder, and the comparative analysis is calculated with the same assumptions as for the 2.6 m deep I-girder. Two sections have the same cross section in the span and the cost difference is attributed to the sections that are different. The cost comparison for the two different solutions results in a negligible difference of about 1 EUR/m2 in favour of the unstiffened alternative, which indicates that the limiting depth at which unstiffened webs are no longer economical

would be approximately 4 m. For both bridges, trapezoidal longitudinal stiffeners have been used in the calculations, and the costs have been calculated by the same bridge contractor.

5.4 Type of longitudinal stiffener and continuity

5.4.1 General

Two main types of longitudinal stiffener may be used:

- Open stiffener, usually single flat stiffener
- Closed stiffener, usually trapezoidal one

In case of box-girder bridges, they are located inside the box section. In case of I girder bridges, they are in general located between the girders. In a few cases longitudinal closed stiffeners have been put outside the girder to solve the problem of the intersection with the vertical stiffeners.

5.4.2 Single flat longitudinal stiffener

Flat stiffeners are in general continuous through the length of the bridge and pass through the vertical ones. In this case they are fully taken into account for global and section analysis. Their location in the web depth results from a compromise between different verifications (shear, bending, patch loading).

As an exception in France, in order to avoid the problem of cutting the vertical stiffeners, the longitudinal single flat are discontinuous (see Figure 5-6 for an illustration of this typical French design). In this case, EN 1993-1-5, 9.2.2 (2) indicates the way to take them into account:

- Neglected in the global analysis and in the calculation of stresses,
- Considered in the calculation of the effective^{p} widths of web sub-panels and in the calculation of the elastic critical stresses.

In order to improve the fatigue behaviour, these discontinuous longitudinal stiffeners have tapered ends, see Figure 5-7 for the fatigue classification.

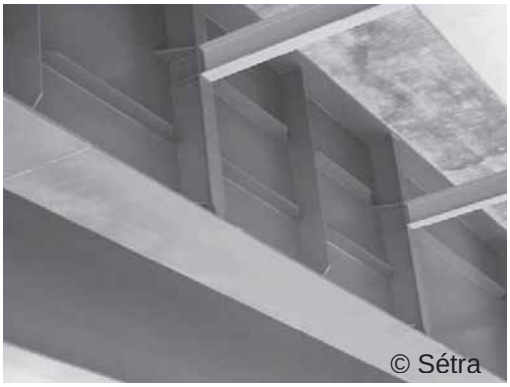

Figure 5-6: Twin-girder bridge in Triel-sur-Seine, France, 2003.

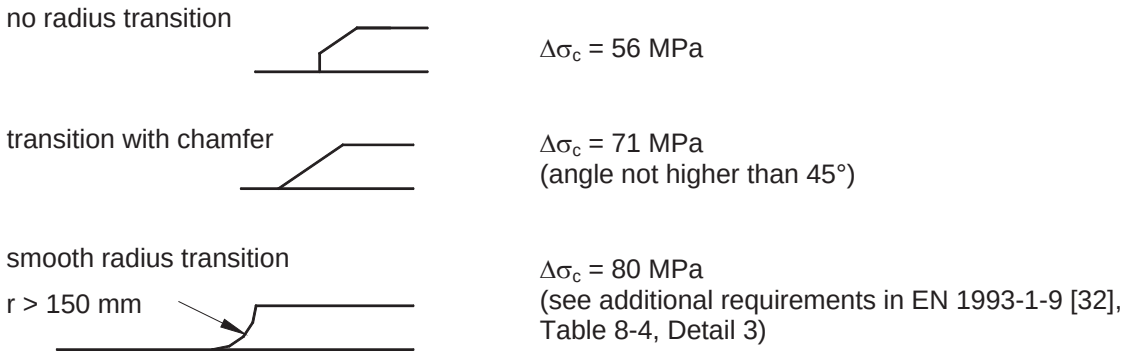

Figure 5-7: Fatigue detail categories for a single flat stiffener.

5.4.3 Closed shape longitudinal stiffener

They should be continuous and pass through openings made in the transverse stiffeners. EN 1993-1-5, 9.2.4 (4) gives detailing about the dimensions of the openings in the transverse stiffeners (see Figure 5-8). After having been cut out, the transverse stiffener has a reduced resistance to shear which is taking into account by EN 1993-1-5, 9.2.4(5) by adding a criterion for the shear resistance of the gross web adjacent to the cut out. This detailing with openings in the transverse stiffeners is also better for fatigue behaviour.

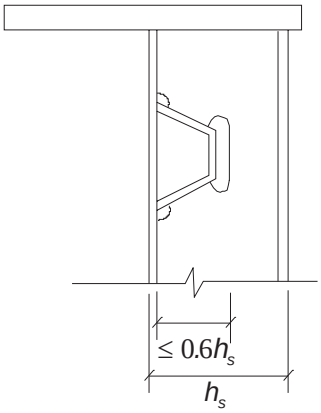

Figure 5-8: Cut outs in transverse stiffener

5.4.4 Discontinuous longitudinal stiffeners

Current French regulations concerning plate buckling, which are based on elastic buckling theory, can lead to the use of one or two longitudinal stiffeners (depending on the web depth) welded to the main girders.

For I-girder bridges, these longitudinal stiffeners are usually single flat plates. Their location in the web depth results from a compromise between different verifications (shear, bending, patch loading). In order to improve the fatigue behaviour, the longitudinal stiffeners are discontinuous (no welding on the vertical ones) with tapered ends (see Figure 5-6).

As they are not continuous, their steel section is not taken into account in the global analysis.

5.4.5 Exterior longitudinal stiffeners

In general, longitudinal stiffeners are oriented towards the inside of the bridge structure. In this place, usually other stiffening elements such as vertical stiffeners and/or cross-frames are arranged as well. As a result, constructional details between the stiffener running through in the longitudinal direction and the vertical stiffeners and/or cross-frames need to be solved. An example of such a situation in a typical box-girder is shown in Figure 5-9.

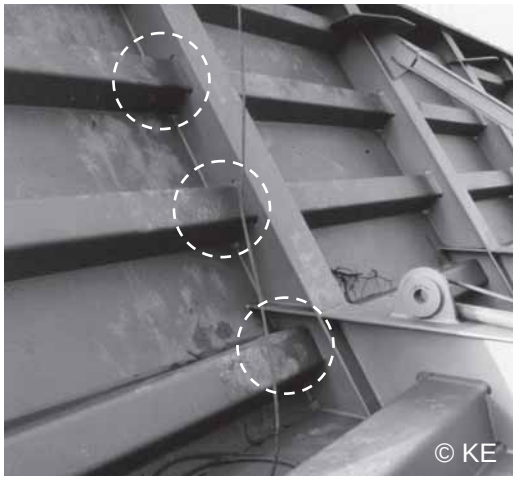

Figure 5-9: Constructional detail of the intersection "longitudinal stiffener and cross-frame".

As an alternative solution the longitudinal stiffeners can be applied on the opposite side than the vertical stiffeners and/or cross-frames which would commonly correspond to the exterior surface of the web plate. Thus, not only a costly detailing and fabrication of the intersecting joint is avoided but also the number of notches is reduced with regard to fatigue.

A well-cited example in literature of a bridge where the longitudinal stiffeners have been applied on the exterior of the web is the river bridge Nordsteg across the Danube in Vienna, Austria [57], [67], cf. Figure 5-10. The bridge has been completed in 1996 and firstly it was used as a road bridge to allow for comprehensive maintenance works of a neighbouring bridge before it finally became a footbridge. For the longitudinal stiffeners a triangular cross-sectional shape, see Figure 5-11 has been chosen and in total four longitudinal stiffeners have been applied over the web height. The orientation on the outside also facilitated the installation of two large pipes inside the box-girder.

Figure 5-10: River bridge Nordsteg in Vienna, Austria, 1996.

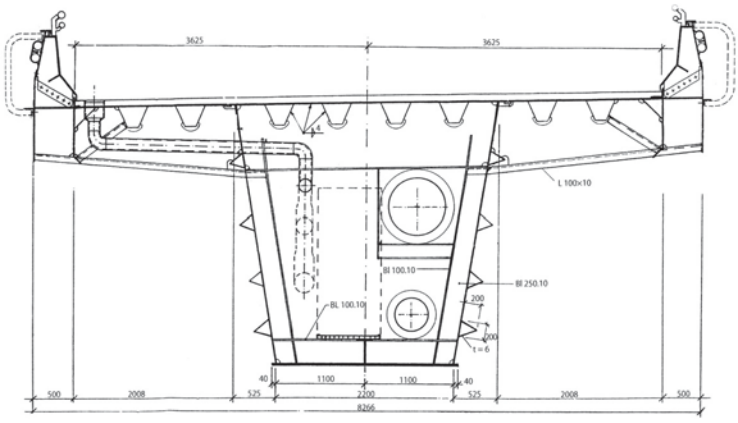

© MCE Stahl- und Maschinenbau GmbH & Co

Figure 5-11: Cross-sectional view of the Nordsteg in Vienna, Austria, 1996.

In Germany, a railway bridge with longitudinal stiffeners on the outside of the web was erected near Riesa in 2005, cf. Figure 5-12. The bridge consists of a tied-arch bridge with approaching spans which is erected by the incremental launching technique. The web of each main girder has two exterior longitudinal stiffeners.

Figure 5-12: Launching of a railway bridge near Riesa, Germany, 2005.

In the following, the characteristics and implications of bridges with longitudinal stiffeners on the outside of the web are summarised:

- **Fabrication.** As the complex constructional detail at the intersecting joint between longitudinal stiffener and vertical stiffener and/or cross-frame disappears, it saves cost and time with regard to the cutting, trimming and welding of the steel plates.
- **Corrosion protection.** In order to avoid the accumulation of dirt and standing water, a sufficient inclination of stiffener flanges is recommended.
- **Fatigue.** Due to the disappearance of the intersecting joint between longitudinal stiffener and vertical stiffener and/or cross-frame, the number of notches is reduced which is favourably with regard to fatigue behaviour.
- **Appearance.** The application of exterior longitudinal stiffeners can be used to influence the architectural quality of the bridge.

6 Cross bracings and diaphragms

6.1 Introduction

This chapter deals only with intermediate cross bracings. Cross bracings or diaphragms serve the same purpose and are used in bridge girders to provide the following functions:

- Prevent lateral torsional buckling during erection;
- Distribute loads between multiple girders (if more than two);
- Transfer lateral loads (wind) on the girders to the deck;
- Prevent lateral torsional buckling of a compressed bottom flange during service;
- Prevent cross sectional distortion of box-girders.

There is no requirement of cross bracings in the Eurocodes and accordingly they can be omitted if the functional requirements listed above can fulfilled with other means. This may be the case for short span bridges with rolled girders

6.2 Cross bracings in I-girders

6.2.1 General

Cross bracings in I-girder bridges can be designed as a frame like the one shown in Figure 6-1 or like a lattice shown in Figure 6-2. The former relies on the bending stiffness of the transverse beam and the stiffeners. The joint between those has to be able to transfer moments and may be welded or bolted. The latter relies on the axial stiffness of the bars and if it is a complete lattice it is usually so stiff that a separate check of its stiffness is not needed. The adequacy of the frame type cross brace for preventing lateral torsional buckling of the top flange during erection and for the bottom flange during service has to be checked. Simplified rules are given 6.3.4.2 of EN 1993-2 for the check of the stiffness as well as the strength.

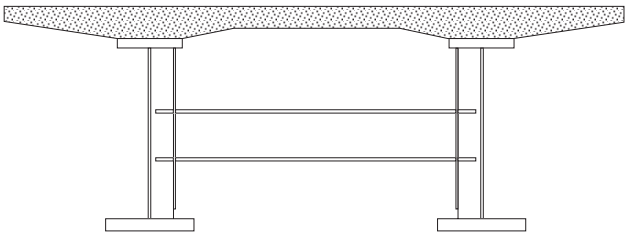

Figure 6-1: Cross bracing in the shape of a frame.

Figure 6-2: Cross bracing as a full lattice.

The frame type cross bracing can be used to carry the deck slab and also be extended under the cantilever part of the slab (see Figure 6-3).

For railway bridges, the cross bracing is strengthened due to heavier loads and dynamic effects induced by high speed. A lower concrete slab (or a horizontal steel bracing) is added between the two lower flanges to increase the torsional rigidity of the bridge. Figure 6-4 shows the horizontal studs, which connect the lower concrete slab to the lower parts of the webs.

Figure 6-3: Twin-girder bridge near Avignon, France, 2008.

Figure 6-4: Railway twin-girder bridge (TGV Est, Canal de l'Ourcq) with diaphragms, France, 2006.

The temporary wind bracing used during construction before the concrete slab is placed, could be made of rigid members assembled using bolts, or cables (see Figure 6-5 and Figure 6-6). This wind bracing is designed with in-plane cross beams between the main girders. The wind bracing is located below the top of the girders in order not to be in the way for the formwork for concreting the slab.

Figure 6-5: Twin-girder bridge in Sens, France.

Figure 6-6: Railway twin-girder bridge (TGV Est, Pont à Mousson), France.

6.2.2 Standard design for the calculation example “twin-girder bridge”

6.2.2.1 Stiffness of the bracing frames

Typical bracing frames are modelled as illustrated in Figure 6-7, with the following hypotheses:

- the concrete slab transverse flexibility and its extensibility are neglected
- the web part acting together with the vertical frame post is $15\varepsilon t_w$
- the vertical frame post is assumed to make an hinge with the concrete slab

Lateral displacements under two load cases are studied (see Figure 6-8). The stiffness C_d of the bracing frame is then given by:

$$C_d = \min\left(\frac{1}{\delta_1}, \frac{1}{\delta_2}\right)$$

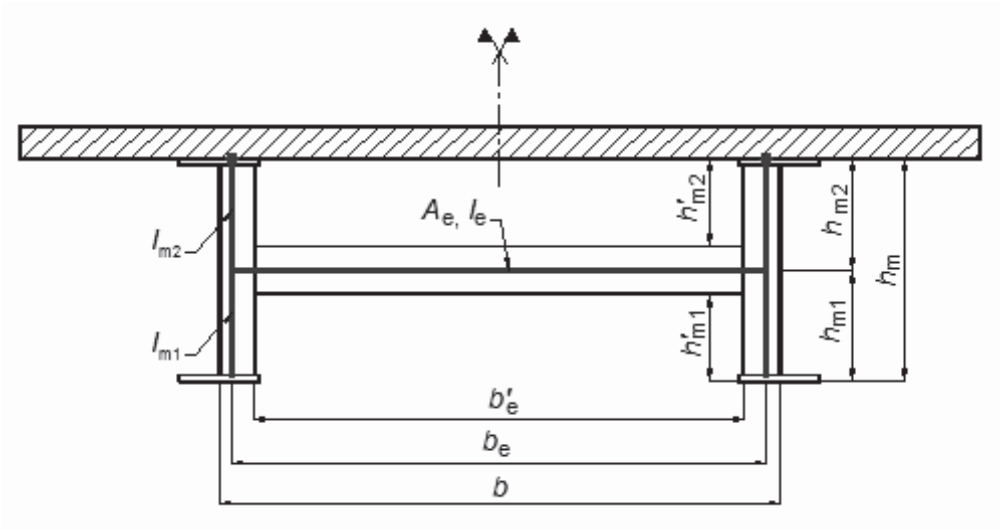

Figure 6-7: Modelled transverse frame.

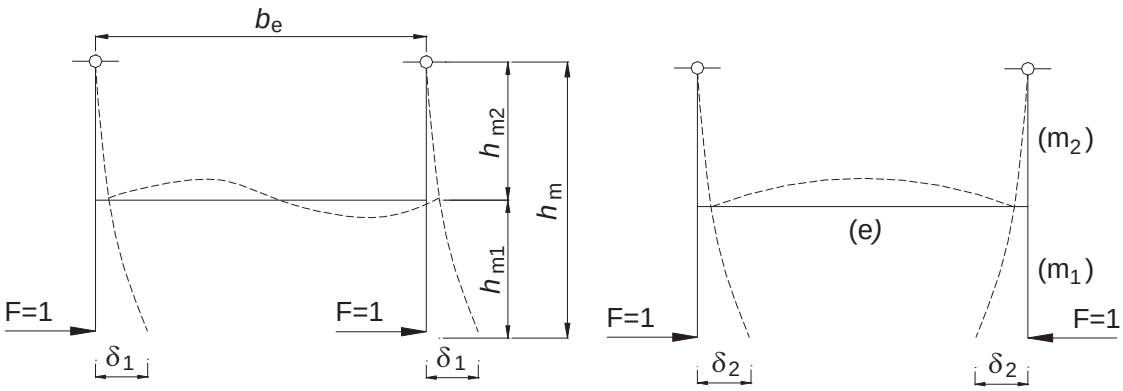

a) Same direction forces (load case 1). b) Opposite direction forces (load case 2).

Figure 6-8: Load cases for the rigidity C_d calculation.

6.2.2.2 Spacing of the bracing frames

The initial proposed distribution of bracing frames in Part I of the COMBRI Design Manual [16] for the twin-girder bridge was as follows :

- rigid transverse bracing on abutments and on internal supports which are considered to be fixed lateral supports for the main girders,
- in-span bracing frames every 8.33 m in side spans (C0-P1 and P2-C3) and every 7.5 m in central span (P1-P2), with a rigidity C_d = 24.2 MN/m (see Figure 6-9).

To justify lateral torsional buckling around internal supports (P1 and P2), some additional provisions are proposed :

- additional bracing frames located at 3.5 m from P1 and P2 in the end spans,
- additional bracing frames located at 3.0 m from P1 and P2 in the central span,
- the rigidity of eight bracing frames (two on each side of P1, and two on each side of P2) is increased.

The corresponding design is illustrated in Figure 6-10. The obtained stiffness reaches C_d = 46.6 MN/m instead of the previous value.

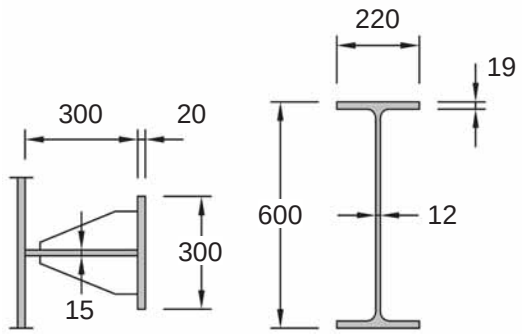

Figure 6-9: Non-strengthened transverse cross-bracing in span. Dimensions in [mm].

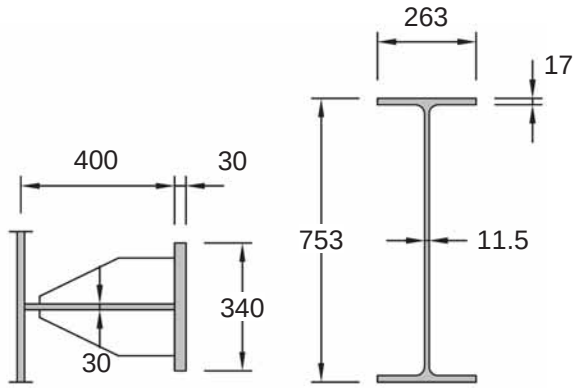

Figure 6-10: Strengthened transverse cross-bracing in span. Dimensions in [mm].

6.2.2.3 Verification against lateral torsional buckling

Table 6-1 illustrates the lateral displacements corresponding to the first three buckling modes of the numerical model. The factor $\alpha_{cr,op}$ is the factor by which the ULS applied load should be multiplied to get the critical load for a given buckling mode.

$\alpha_{ult,k}$ = 1.168 and $\alpha_{cr,op}$ = 15.676, so the reduced slenderness is equal to:

$$\overline{\lambda_{op}} = \sqrt{\frac{\alpha_{ult,k}}{\alpha_{cr,op}}} = \sqrt{\frac{1.168}{15.676}} = 0.273 \geq 0.2$$

Then $\Phi = \frac{1}{2}.\left[1+\alpha\left(\overline{\lambda}_{op}-0.2\right)+\overline{\lambda}_{op}^{\,2}\right]$ = 0.565 and $\chi = \frac{1}{\Phi+\sqrt{\Phi^2-\overline{\lambda}_{op}^{\,2}}} \leq 1.0$ is equal to 0.944.

The LTB criterion is then verified:

$$\chi_{op} \frac{\alpha_{ult,k}}{\gamma_{M1}} = 1.002 > 1.0$$

Table 6-1: Transverse displacement of the first three elastic critical buckling modes.

Mode	$\alpha_{cr,op}$	Description of the observed transverse displacement
1st	15.676	 Anti-symmetric waves around the support P2
2nd	17.716	 Anti-symmetric waves around the support P1
3rd	27.111	 Quasi-symmetric waves around the support P2, and a small wave around P1

6.2.3 Improved design for the calculation example “twin-girder bridge”

6.2.3.1 Cross-bracing characteristics

The twin-girder bridge designed in Part I of the COMBRI Design Manual [16] was provided with a frame type cross bracing. An improved design of cross bracing for LTB is presented in the following based on [68]. The spacing between bracing frames is the same as the spacing described in Section 6.2.2. The difference is the nature of the cross-bracing, made up of several bolted rolled members instead of welded steel sections.

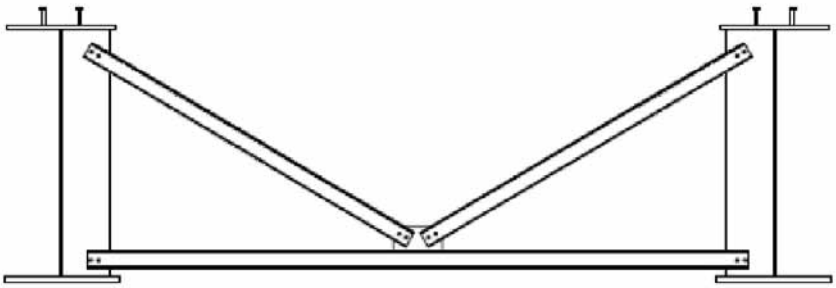

Figure 6-11: Alternative transverse cross-bracing in span.

The eight strengthened bracing frames (two on each side of P1, and two on each side of P2) are made up of channels UPE 100 as diagonals (two channels UPE 100 back to back per diagonal) and of a HEA 180 as horizontal, see Figure 6-7. The frame posts are flat plates (dimensions 300 mm x 30 mm). The stiffness of these bracing frames is C_d = 48 MN/m. This stiffness includes the flexibility introduced by the eccentricity between the bottom flange and the horizontal HEA. The other in-span bracing frames

are assumed to be made up of channels UPE 80 as diagonals (two channels UPE 80 back to back per diagonal) and of a HEA 160 as horizontal. The frame posts are flat plates (dimensions 300 mm x 30 mm). They are not analyzed here but later in 6.2.3.5.

6.2.3.2 Verification against lateral torsional buckling

The buckling modes have similar shape to the buckling modes presented in 2.6 of Part I of the Design Manual, with close factors $\alpha_{cr,op}$ equal to 16.0 for the first mode, 18.1 for the second mode, and 27.8 for the third mode. The LTB criterion is then verified:

$$\chi_{op} \frac{\alpha_{ult,k}}{\gamma_{M1}} = 1.005 > 1.0$$

6.2.3.3 Verification against buckling of the members

In the first in-span bracing frame closest to P2, at the abscissa x=107 m, there is a risk of buckling of the diagonals and of the horizontal HEA.

The following horizontal load cases are applied to the level of the bottom flange:

- a lateral wind
- a force equal to 1/100 of the compressive force at ULS in the lower flange at the position of the bracing.

The total gives a 0.24 MN transverse load. The corresponding normal force in the bracing frame are presented in Figure 6-8, for the cases buckling towards each other and buckling in the same direction. The normal force due to the wind only applies on one side, but as it is small compared to the normal force due to $N_{ULS}/100$, it has been applied on both sides.

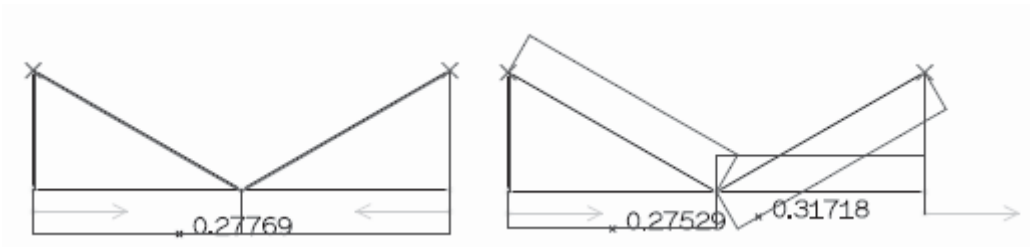

Figure 6-12: Normal force in alternative bracing frames, for the study of the members buckling.

For the buckling verification, the members are considered as hinged at both ends (this assumption is of course very unfavourable).

Buckling of the diagonals

For each diagonal (2 UPE 100 back to back), the length of the member is about 3.6 m, so the critical force is equal to 570 kN and the reduced slenderness is equal to 1.23. The diagonals are channels, so the reduction curve is the curve c, with α = 0.49. The corresponding reduction factor χ is equal to 0.42, and the ratio $\frac{N_{Ed}}{N_{b,Rd}}$ is equal to 0.97.

This value is inferior to 1.0, so there is no risk of buckling of the diagonal members.

Buckling of the horizontal member

The length of the horizontal member (HEA 180) between the frame posts is about 6.40 m, so the critical force is equal to 0.47 MN and the reduced slenderness is equal to 1.83. The horizontal is a rolled

sections, so the reduction curve is the curve c for buckling in the weak direction, with α = 0.49. The corresponding reduction factor χ is equal to 0.23, and the ratio $\frac{N_{Ed}}{N_{b,Rd}}$ is equal to 0.85 < 1.0.

So there is no risk of buckling of the horizontal member.

Comparison with the previous design

The two designs presented in Part 1 and here comprise the same number of bracing frames. Each design consists of two different bracing frames, a non-strengthened one, and a strengthened one.

In the first design, the members are welded, whereas they are bolted in the second design, so the fabrication of the second one is easier and cheaper.

Concerning the steel quantity of the different bracing frames designs, shows that the lattice type design saves 52 % of steel.

Table 6-2: Steel quantities for cross bracings.

		Weight of one bracing frame [kg]	Number of bracing frames on the whole bridge	Total weight of the bracing frames [tons]	Saving
Frame type, Figure 6-7	non-strengthened	1,180	13	28.9	
	strengthened	1,690	8		
Lattice type, Figure 6-11	non-strengthened	640	13	13.9	52 %
	strengthened	700	8		

6.2.3.4 Choice of the reduction curve for lateral torsional buckling

For the previous bracing frames designs, the curve d corresponding to α = 0.76 has been used, according to EN 1993-1-1 [30]. Recent studies show that this curve d is very safe for LTB, and that the curve b would be more appropriate. The LTB verification is thus more unfavourable with EN 1993-1-1 than with the previous national rules of many European countries.

Table 6-3: Steel saving on cross bracings from using reduction curve “b” instead of curve “d” for lateral torsional buckling.

		Total weight of the bracing frames [tons]	Saving
Frame type, Figure 6-7	reduction curve d	28.9	
	reduction curve b	20.1	30%
Lattice type, Figure 6-11	reduction curve d	13.9	
	reduction curve b	10.8	22%

With the use of the reduction curve b, a spacing between bracing frames similar to the one described in original design with bracing frames close to the non-strengthened would be sufficient for verification of LTB, with an undoubted steel saving, see Table 6-3.

6.2.3.5 Cross-bracings in the sagging moment region

So far it has been assumed that the girders have a wind bracing during erection. It can be seen from for instance Figure 6-5 and Figure 6-6 that such bracings are used in France and from Figure 2-61 that they are not used in Sweden. The differences in practice may be caused by different rules for load combination or differences in wind loads considered for temporary stages. If there is a wind bracing the stability of the top flange during casting the slab can be checked as lateral buckling between the cross braces. If there is no wind bracing the stability of the top flange has to be assured by the cross bracings. If the cross bracing is of the lattice type discussed above the stiffness of the bracing is quite small and relies mainly on the bending stiffness of the horizontal beam. Figure 6-9 shows a cross bracing without vertical stiffeners, which is possible when the function is to prevent lateral buckling of the top flange during erection. If it is intended to prevent buckling of the bottom flange during service the eccentricity of the horizontal to the bottom flange has to be considered and vertical stiffeners will be required as shown before.

In addition to being cost effective this cross bracing also minimizes the restraint for rotation of the top flange. It is sometimes a concern that bending of the bridge deck induces tension in the shear studs if the rotation of the top flange is restrained, for instance by vertical stiffeners. In 6.6.1.1(13) of EN 1994-2 it is stated that this should be considered but no quantitative rules are given. The use of the cross bracing in Figure 6-13 would be one way of satisfying this application rule.

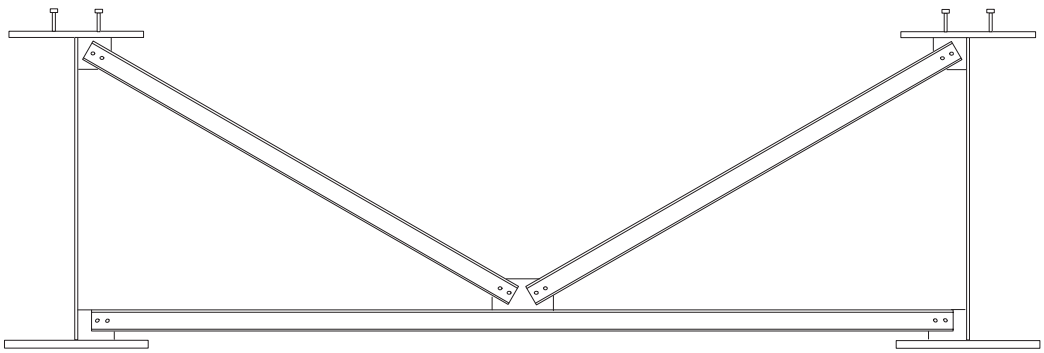

Figure 6-13: Cross bracing without vertical stiffeners.

A verification of the top flange at the mid span of the I-girder bridge in Part I of the COMBRI Design Manual [16] will be shown assuming that the horizontal beam is a HEA 180 in S355. This is one size larger than in 6.5.3 but it will turn out to be needed. The spring stiffness is calculated assuming that the axial stiffness of the bars is high and that the flexibility comes only from bending of the horizontal beam. With a fictitious unit force in each top flange directed outwards we get a deflection upwards in the middle of the beam of 1.87 m/MN and the corresponding outward displacement of the top flange becomes 0,976 m/MN. The spring stiffness thus becomes C_d =1/0.976 = 1.02 MN/m. The distance between the braces is 7.5 m and the distributed spring stiffness becomes c = 1.02/7.5 = 0.136 MN/m^2. For the calculation of the critical force it is assumed very conservatively that the top flange 35x 800 is infinitely long with constant axial force.

$$N_{cr} = 2\sqrt{cEI} = 2\sqrt{0.136 \cdot 314} = 13.1 \text{ MN}$$

The area should be taken as the flange area plus one third of the compression zone which gives A= 0,0358 m2 and σ_{cr} = 366 MPa. The slenderness parameter and the reduction factor with curve d becomes

$$\bar{\lambda}_{LT} = \sqrt{\frac{345}{366}} = 0.97$$

$$\chi_{LT} = 0.483$$

The resistance expressed as stress becomes

$$\sigma_{Rd} = 0{,}483\frac{345}{1.1} = 151 \text{ MPa}$$

The actual design stress during casting is 1.35x94=127 MPa and the stability is verified.

In addition the strength of the cross bracing should be verified according to 6.3.4.2(5) of EN 1993-2. The axial force in the flange is taken as

$$N_{Ed} = 127 \cdot 0.0358 = 4.54 \text{ MN}$$

First we have to check if second order effects have to be considered with

$$l_k = \pi\sqrt{\frac{EI}{N_{cr}}} = 15.4 \text{ m} > 1.2\, l = 9.0 \text{ m}$$

It means that second order effects has to be considered and the applicable formula for the lateral force is

$$F_{Ed} = \frac{l}{l_k}\frac{N_{Ed}}{80}\frac{1}{1-\frac{N_{Ed}}{N_{cr}}} = \frac{7.5}{15.4}\frac{4.54}{80}\frac{1}{1-\frac{4{,}54}{13.1}} = 0.0423 \text{ MN}$$

This force applied to each flange and outwards gives a bending moment in the beam 88 kNm to be compared with the bending resistance of 105 kNm. The force F_{Ed} also gives a compression force in the web of 25 kN, which should be resisted as opposite patch on the web. This is obviously no problem and the calculation is omitted.

6.3 Diaphragms in box-girders

A box-girder needs diaphragms or cross braces in order to avoid cross sectional distortion caused by eccentric traffic load. The most cost effective solution is usually cross braces, for example as shown in Figure 4-5. The forces on the cross braces are fairly high compared to those in I-girder bridges. The solution shown in Figure 4-5 without transverse web stiffeners requires that the transverse forces in the web can be carried by the web alone. This has to be checked with the rules for opposite patch loading in EN 1993-1-5.

There is a rule in 6.2.7.1(3) of EN 1993-2 [35] stating that an increase of the bending stresses in a box-girder due cross sectional distortion of 10% may be neglected. This rule makes it possible to determine a maximum distance between diaphragms. It is however hard to give general rules because there are many parameters that influence the magnitude of the additional stresses due to cross sectional distortion.

7 Launching of steel- and composite bridges

7.1 Introduction

The incremental launching is the most common method for building the structural steel part of a bridge. The steel elements (coming from the workshop) are assembled on a devoted area behind the bridge abutment. The steel part of the bridge is then pushed (from one side or from both ones) step by step to reach its final position. In France the longest span (171 m) has been launched in 2003 for the Millau viaduct. For a twin-girder bridge, the record is held in France by the Triel-sur-Seine bridge with 124 m in 2003. Another noticeable example is the composite box-girder of the Verrieres viaduct with a maximum launched span of 144 m in 2000. Different pictures have already been included in this Manual, see Figure 2-25 or Figure 2-27 for instance.

It should be notice that the launching technique can be used for curved bridge with a constant radius, or for girders with a variable height, see Figure 7-1. For each step of the launching process, the track of the launched part should coincide with the final transverse position of the bridge.

a) Launching of a curved bridge near Cannes, France.

b) Launching of girder with a variable height near Pont-à-Mousson, France.

Figure 7-1: Particular launching case.

From an economical point of view

The main advantages of this technique are as follows and result in a reduction of the construction time and costs for the bridge:

- Cross the valley widely above the natural ground
- Reduction of risk for the workers who work directly on the ground in the launching area (and not above the valley)

- Possibility of making the welds in a provisional shelter with all facilities for assembling the steel segments arriving from the workshop
- Launching above railway tracks or roads without interrupting the traffic, and resulting in cost savings

The main inconvenient is that an reserved area is needed behind the bridge abutment in order to assemble the steel structure before launching. The scope of the launching process in terms of span length and of girder weight is also closely linked to the capacities of the launching devices, see below.

From the designer point of view

The resistance verification should be performed for each launching step and then for each bridge cross-section. For a given launching step, the in-span cross-sections are not usually designed by this transient situation. Even if the structural steel part of the section resists alone (without steel-concrete composite behaviour), the applied loads are twice (even more) smaller than in the final situation of the bridge under traffic loads.

These verifications also include the buckling which could occur in the web panel located provisionally on an internal support. This panel is submitted to transverse patch load in combination with the bending moment and the shear force coming from the cantilever part of the bridge (which has already crossed this internal support). The web panel is limited by two transverse vertical stiffeners and its buckling can be justified by eventually adding longitudinal stiffeners. See Paragraph 7.2 below.

The global buckling of the launched steel girder should also be justified. This mainly concerns the lateral torsional buckling which can occur in the cantilever steel girder (partially launched) with the whole bridge section, or in the upper compressive flange of a box-girder (or of an I-girder) which is located in a completely launched span. This lateral torsional buckling can be prevented by using a well-designed provisional cross-bracing. See Paragraph 7.3 below.

7.2 Local behaviour: introduction of the transverse load

7.2.1 General

Different kinds of devices could be used for bridge launching. The two main ones are launching shoes and sliding skates. The sliding skates are preferable if the weight is high. If the support reaction does not exceed around 300 tons, the rolling shoes become more efficient because their use increases the launching speed (up to 1.5 m per minute).

With the following devices, the classical web buckling verification (for instance, the Eurocodes) considers that the transverse load is applied in the web plane without transversal eccentricity and that the load intensity is uniform over the whole length of the device.

7.2.2 Launching shoes

7.2.2.1 General

The main problem of this device is that their length increases very quickly with the reactions on the support. The reactions on support can be particularly high when the spans are long or when the bridge is launched with part of its concrete slab. After launching, the transfer from the launching shoe to the definitive support becomes also more difficult and more expensive.

The two techniques explained below insure that the vertical reactions are the same for each wheel of the shoe. In the first case this is obtained by the balancing system and in the second case, by the use of the cable.

7.2.2.2 Wheels on balancing device

These shoes are composed with elementary balancing devices of 2 steel wheels. The balancing device is installed on a roller bearing that allows the launching of bridges with variable depth or large pre-camber. The articulations of bearings keep the contact between the bridge girder and the wheels of the launching shoe during launching phases. Different configurations could be drawn with 2, 3, 4 or 6 wheels in a launching shoe. The number of wheels is determined by the load calculation on supports during launching. Each wheel corresponds to a maximum load of 30 to 55 tons, its thickness varies from 60 to 180 mm and its diameter varies from 350 to 800 mm following the constructor.

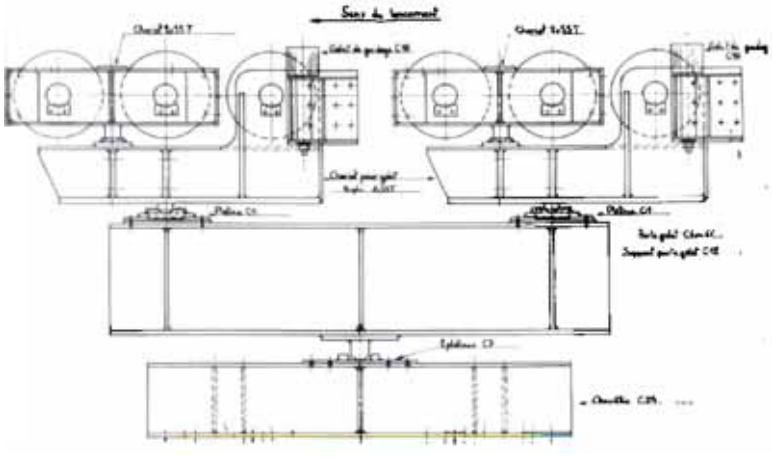

© Sétra

Figure 7-2: Launching shoe with 6 wheels (maximum loads = 330 tons).

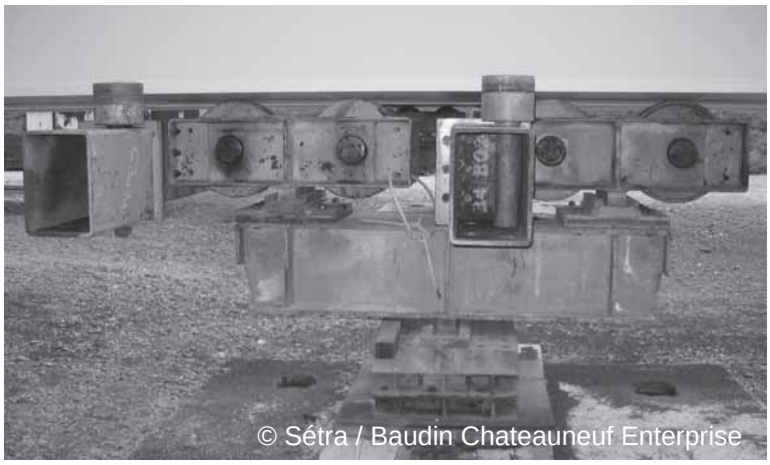

Figure 7-3: Launching shoe with 4 wheels and 2 lateral wheels for longitudinal guidance (total length = 1.25 m).

7.2.2.3 Wheels and cable

The steel wheels are set down on a cable that is anchored in the frame of the launching shoe. Each wheel (4 or 5 per shoe) corresponds to a maximum load of around 40 tons.

This type of launching shoes is used for the launching of bridges with a variable curve in plan because they could be installed on a roll-on plate that allows the rotation around a vertical axis. The inconvenience is their large length that limits the allowed variations of the longitudinal section of the bridge.

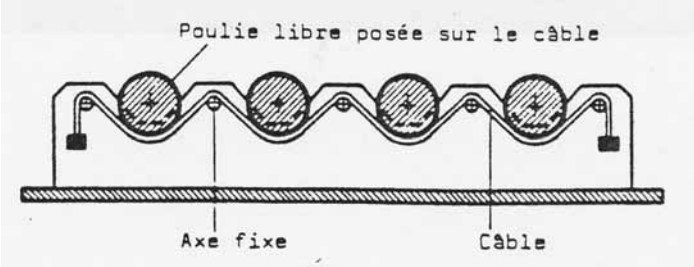

© Sétra

Figure 7-4: Launching shoe with wheels and cable.

7.2.2.4 Balancers

In order to provide a favourable long loading length and a small structural height of the launching shoe at the same time, a balancer as shown in Figure 7-5 and Figure 7-6 can be used. An additional elastomeric layer between the steel beam and the bridge girder helps to achieve a uniform-like load distribution of transverse stresses. Besides that, the construction is able to account for the deformation and the curvature of the launched bridge girder.

Cross-sectional view

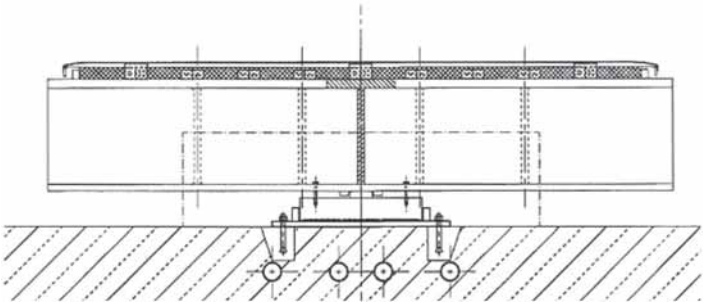

© Donges Steeltec GmbH

Figure 7-5: Balancer of the valley bridge Elben near Siegen, Germany, 2005.

Figure 7-6: Balancer of the valley bridge Elben near Siegen, Germany, 2005.

7.2.3 Sliding skates

The sliding skates could be fixed to the launched girder or to the guidance rails.

In the first case, the load could be introduced in the web right on a transverse stiffener during the complete launching phase (see Figure 7-7). This is of course favourable to limit the web buckling. The skate faces are covered with Teflon (polytetrafluoro-ethylene or P.T.F.E.) and the guidance rails are made of stainless steel. Lubricant could also be used (for instance black soap for Charles de Gaulle bridge in Paris, in 1996).

In the second case, the bottom flange of the steel girder slides on steel plates covered by a Teflon film and fixed to the support. During the launching phase, the load could then be introduced between two vertical web stiffeners.

Figure 7-7: Sliding skate fixed under a vertical stiffener, Verrières viaduct near Millau, France, 2002.

In comparison with the launching shoes (see Paragraph 7.2.2), the use of sliding skates has two main advantages. The first one is a better introduction of the load in the web plane (more uniformly distributed), and the second one is the smaller size of the whole launching device combined with a better load carrying capacity.

7.2.4 Other devices

The transverse load could also be introduced in the web plane through a continuous patch length, without any sliding on the interface. The progression of the bridge is then obtained by a jack system (for instance, the Millau viaduct, see Figure 7-8a) or by a track (Japanese technique), see Figure 7-8b).

a) Jack system from the Millau viaduct (France)

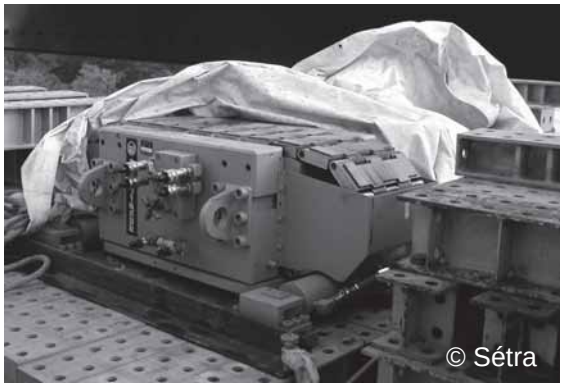

b) Track system (Japan).

Figure 7-8: Other launching devices.

7.3 Global behaviour during launching

7.3.1 General

It mainly concerns the control of the vertical deflections and the risk of global instability (lateral torsional buckling). The considered actions are the global bending moment of the bridge girder and eventually the wind action.

This topic was not part of the COMBRI research project and does not deal with plate buckling, so it is only quickly mentioned here.

7.3.2 Launching nose

In order to recover the deflection of the cantilever part of the structure when a support is reached, and to lighten this cantilever part, a launching nose is generally used. In extreme cases, a launching pylon can even be added, see Figure 2-28. The length of the launching nose varies from 20 to 30% of the main span length.

Figure 7-9: Launching nose for the Verrières viaduct near Millau, France, 2002.

7.3.3 Temporary cross-bracings

To avoid lateral torsional buckling during launching phases, a temporary horizontal wind bracing may be added between the permanent transverse girders or diaphragms of the bridge if these alone are not sufficient. This wind bracing can be performed with cables or rigid diagonals (tubes or angle sections). Such devices can be seen in Figure 2-19, Figure 6-5 or Figure 6-6.

7.4 Launching with a part of the concrete slab

7.4.1 General

Three options can be considered:

- launching with the formwork and reinforcing steel bars only.
- launching with prefabricated slabs segments laid on the steel girders but not connected.
- launching with a part of the concrete deck poured in-situ (before launching) and connected to the steel girders.

The third option leads to a very heavy structure. Then it becomes very difficult to use rolling shoes and the only solution is to use sliding skates fixed on the steel structure just below a vertical stiffener (see Figure 7-7). Even using these sliding skates, the maximum span length that could be launched is limited to around 20 m. The main French experience is a two girder bridge in Cannes over the highway A8, with a 23-m-long span. For longer span, a longitudinal prestressing of the concrete slab becomes

necessary to avoid excessive cracking in the slab. In any case the concrete slab should not be put on the cantilever part of the steel girder to limit the negative bending moment on internal supports during launching. Further concreting is then unavoidable after the launching is completed. This kind of launching is not a very economical solution and should be kept for cases where the launched bridge crosses railway lines or roads with heavy traffic that can not be interrupted to handle the concrete formworks above. One example in France is the Croix Verte Viaduct near Avignon above the TGV railway line in 1994. A 30-m-long segment has been poured before launching, for a total bridge length of 138.50 m (see Figure 7-10).

Figure 7-10: Croix Verte viaduct, launching above train lines, Avignon, France, 1994.

Launching with prefabricated slab segments (laid on the steel girders and acting as a dead load without any steel-concrete connection) offers some advantages among which the main ones are:

- the reduction of construction time for the bridge deck
- the reduction of risks
- and as a consequence, the reduction of costs

The reduction of risks mainly concerns the workers who act on the launched steel girders for concreting the slab on site after launching. It is all the more so as the launching technique is chosen (instead of the use of a crane) when the bridge deck crosses the valley widely above the natural soil. By the use of precast slab segments, the part of the work performed on the launched steel structure is reduced.

The prefabricated slab segments act as a dead load for the steel girders during launching. This has some consequences :

- It is not recommended to put the slab segments on the cantilever part of the steel girders, whatever the considered launching step. It would increase the internal forces and moments and the risk of lateral torsional buckling in the cantilever part of the steel girders. The vertical deflection of this cantilever part would also be increased and the accosting on the next support would become more difficult.
- The weight of the slab segments increases the bending moment in the steel girder and the web buckling verifications should be performed carefully.
- The interaction between shear force and transverse load should be carefully verified for the web panel located right above the last crossed internal support. In fact the cantilever steel part of the bridge (on one side of the considered panel) resists only its self weight whereas on the other side, the steel girder resists its self weight and the dead load of the slab segments.

7.4.2 Application to the calculation example “twin-girder bridge”

One of the outcomes from the COMBRI research project is a modification of the EN 1993-1-5 formulae (Section 6) for verifying the web buckling above the launching device. This criterion has been proved to be conservative for slender bridge webs [15]. Then it has been modified by deleting the factor m_2 in the yield resistance formula and by calibrating a new reduction curve. It becomes thus interesting to use this new criterion for launching heavier structures, for instance the steel part of a composite bridge with precast slab segments already laid on it.

The launching process has already been verified (according to Section 6 and 10 of EC3 Part 1-5) for a twin-girder bridge example in Part I of this Design Manual [16]. On the basis of this example, additional studies have been conducted to study the launching with parts of the concrete slab.

Launching with prefabricated slabs segments

Figure 7-11 shows the most unfavourable launching situation of the twin-girder bridge of Part I of the COMBRI Design Manual [16]. The adding of concrete slab segments before launching will noticeably increase the reactions at supports and the stresses in the steel girder. It depends on the spans, the slab width and the steel girder dimensions, so that the length L has to be evaluated for each project. In this case, the slab segments are put in place on the left side of the section A, along a length of L = 111.75 m, avoiding the cantilever part.

For the launching situation A, as shown in Figure 7-11, the internal forces at pier P_1 (x = 111.75 m) become:

- Bending moment M_{Ed} = - 19.26 MNm
- Support reaction F_{Ed} = 2.67 MN

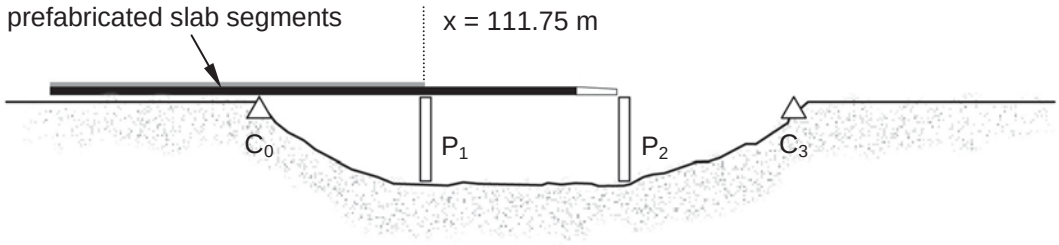

Figure 7-11: Launching with prefabricated slab segments (Position A).

In case the whole launching procedure is evaluated it can be shown that for a launching with prefabricated slab segments, the governing launching situation is for section B, as shown in Figure 7-12. Thus, the internal forces at pier P_1 (x = 51.50 m) become:

- Bending moment M_{Ed} = - 23.93 MNm
- Support reaction F_{Ed} = 4.11 MN

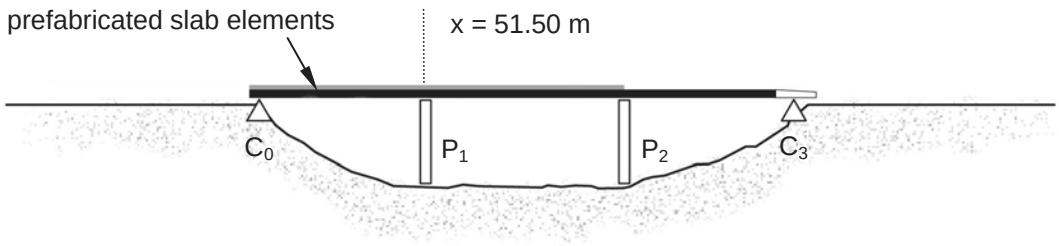

Figure 7-12: Launching with prefabricated slab segments (Position B).

Because the steel cross sections are the same for locations x = 51.50 m and x = 111.75 m, only launching situation B is evaluated. The results are given in Table 7-1.

Launching with reinforcing steel bars

After the case of launching with some precast slab segments acting as a dead load for the steel structure, this new paragraph deals with the case where only the reinforcement is put on the steel girders before launching. In comparison to the previous case, the new launching dead loads will be really lower. This new lighter dead load has a small influence on the lateral torsional buckling risk for the cantilever part in a given launching step. So the reinforcement can be installed all along the steel girders before launching, see Figure 7-13. In comparison to the launching with slab segments, the steel reinforcement can not be considered as a provisional wind bracing for the steel girders so that a temporary wind bracing needs to be installed additionally.

For the launching situation A, as shown in Figure 7-13, the internal forces at pier P_1 (x = 111.75 m) become:

- Bending moment M_{Ed} = - 24.93 MNm
- Support reaction F_{Ed} = 1.93 MN

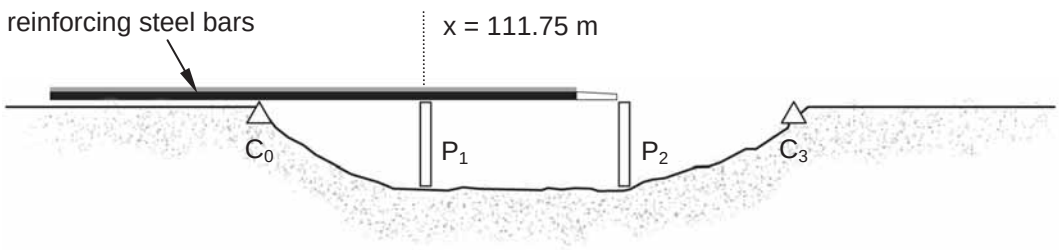

Figure 7-13: Launching with reinforcing steel bars (Position A).

Comparison of results

In Table 7-1 all results are summarised and the observed benefits for alternative launchiung methods are highlighted. It can be shown that due to the large margin the bridge launching of the steel beams with prefabricated slab segments or with reinforcing steel bars can be justified without additional effort if current Sec. 6, EN 1993-1-5 [31] is used. As expected, the use of Sec. 10, EN 1993-1-5, leads to slightly lower resistances. For the launching of the steel beams with partial slab elements the patch loading resistance cannot be justified when using Section 10. When the proposals from the COMBRI research project for modifying Sec. 6, EN 1993-1-5, are used, the calculated resistances can be increased which leads to a larger margin because the level of utilisation is lower. This can be advantageous for other bridges, for which a verification without adjusting the cross sectional properties would not be possible. In this example, however, this is not the case.

A detailed description of the calculations can be found in [69].

Table 7-1: Comparison of results for different launchings of a twin-girder bridge.

	Launching with …		
	steel	**steel and some slab elements**	**steel and reinforcing bars**
studied section at x [m]	111.75	51.50	111.75
bending moment [MNm]	- 19.26	- 23.93	- 24.93
support reaction [MN]	1.46	4.11	1.93

Table 7-1 (continued): Comparison of results for different launchings of a twin-girder bridge.

	Launching with …		
	steel	**steel and some slab elements**	**steel and reinforcing bars**
Results with Sec. 6, EN 1993-1-5			
bending (η_1)	0.27	0.33	0.34
patch load (η_2)	0.35	1.00	0.46
interaction ($\eta_2 + 0.8 \cdot \eta_1$)	0.56	1.26	0.74
margin	60%	**10%**	**47%**
Results with proposals from the COMBRI research project for modifiying Sec. 6, EN 1993-1-5			
patch load (η_2)	0.27	0.76	0.36
saving	22%	24%	22%
interaction ($\eta_2 + 0.8 \cdot \eta_1$)	0.48	1.02	0.63
saving	14%	19%	14%
margin	65%	**27%**	**55%**
Results with Sec. 10, EN 1993-1-5, with different buckling curves (Sec. 4)			
patch load ($=\eta_2$)	0.38	*1.07*	0.50
interaction (interpolated ρ)	0.46	*1.001*	0.60
margin	54%	0%	40%
Results with Sec. 10, EN 1993-1-5, with a single buckling curve (Ann. B)			
pure patch ($=\eta_2$)	0.46	*1.29*	0.61
interaction	1/1.73 = 0.58	*1/0.81 = 1.23*	1/1.32 = 0.76
margin	42%	not verified!	24%

8 Summary

This publication is Part II of the Design Manual based on results from the research project „Competitive Steel and Composite Bridges by Improved Steel Plated Structures - COMBRI“ [15] and the subsequent dissemination project “Valorisation of Knowledge for Competitive Steel and Composite Structures - COMBRI+“, both sponsored by RFCS. Part I is a separate publication, which shows the application of Eurocodes on a composite I-girder bridge and a composite box-girder bridge [16]. This Part II focuses on the conceptual design of steel bridges and the steel parts of composite bridges and it is based on the rules in EN 1993-1-5, EN 1993-2 and EN 1994-2. Design of steel bridges is a very wide field and it has not been covered completely in this manual but a selection of topics has been made and their main conclusions are summarised below.

In Chapter 2 an overview of bridge types in the countries participating in the project was given: Belgium, France, Germany, Spain and Sweden. It reflects the current practice in those countries and presents common bridge types as well as unusual bridges intended to solve special problems and some solutions being parts development projects. There are notable differences between the practices of the countries and these differences are to some extent caused by differences between the national design standards but more often they are caused by different traditions and praxis. Thus, the solutions presented are intended to serve as inspiration for the conceptual design of new bridges.

In Chapter 3 the choice of steel grades has been discussed. The EN 1993-1-1 covers steel grades up to and including S460 but EN 1993-1-12 extends the range of permitted steel grades up to S700. However, in most cases such high grades are not feasible. The problem is usually that the fatigue requirements limit the full utilization of the strength. The grade S460 seems to be the most suitable for normal road bridges and S355 for normal rail bridges. It is also shown that hybrid girders with higher strength in the flange than in the webs are economic in many applications. The box-girder from Part I of this Design Manual was redesigned from S355 to a hybrid girder with S460 and S690 and it turned out that the cost of the material was reduced by 10% in the spans and 25% at the piers. In addition, there will be a reduction of the fabrication cost for sure as well but this has not been quantified.

Flanges are dealt with in Chapter 4 and the main topic has been bottom flanges in box-girders. Such flanges are in most cases stiffened and different types of stiffeners are discussed. Large trapezoidal stiffeners are favourable as they give two stiffened lines for the same welding effort as one open stiffener. Further, their torsional stiffness increases the critical stress and this can be calculated with the software ***EB****Plate* [26] which has been developed in the COMBRI research project. Another topic is the double composite action with both top and bottom flanges being composite which has been used for some large bridges in Germany and France. The top flange is as usual the bridge deck and the bottom flange has a concrete slab at the piers where the bottom flange is in compression. The design of bridges with double composite action is more complicated than the design of a normal composite bridge so that past experience is summarised and recommendations for design are given.

Webs have been discussed in Chapter 5 with the focus on to what extent stiffeners should be used. It is common that transverse stiffeners are used at the locations of the cross bracings of which the transverse stiffeners form a part. The effect of the transverse stiffeners on the resistance of the web is an increase in the shear buckling resistance. However, unless the distance between the transverse stiffeners is very short this effect is small and it does not justify the cost of the stiffeners. The possibility of omitting the transverse stiffeners is discussed. It should be noted that EN 1993-1-5 does not require any transverse stiffeners except at the supports. Besides that, longitudinal stiffeners on webs increase the resistance for bending as well as for shear. The economy of using longitudinal stiffeners has been studied and if the method with effective cross section in EN 1993-1-5 is applied it is shown that longitudinal stiffeners are not economical for web depths below ca. 4 m. The detailing of longitudinal stiffeners has been discussed as well and the main point is the intersection with the transverse stiffeners. One solution is to

use discontinuous stiffeners and another is to put the transverse and the longitudinal stiffeners on opposite sides of the web.

Chapter 6 covers cross bracings and diaphragms for I-girder bridges and box-girders. Functional requirements are described and ways to meet them are discussed. The main functions are to prevent lateral torsional buckling and to transfer lateral loads on the girders to the deck. Traditional cross bracings can be of truss type or frame type including transverse stiffeners on the webs. The distance between the cross bracings is typically up to 7 to 10 m in I-girder bridges. It is not much material used for cross bracings but from an economical point of view it is important to minimize the man hours for fabrication. This has been discussed in terms of eliminating parts and possibly also the transverse stiffeners leading to straightforward solutions. For box-girders, the cross bracings or diaphragms also have the function of preventing cross sectional distortion and in many cases they also support the bridge deck. Therefore the distance between the cross bracings is rather small, typically 4 to 5 m.

Launching has been studied in some detail in the COMBRI research project and it is dealt with in Chapter 7. The technique of launching bridges has been improved and the method is very popular. It is described in some detail including the equipment that is used. At launching the resistance to patch loading is of importance as very high support reactions have to be resisted in combination with high bending moments. This has been studied in the project and it resulted in improved design rules which will be finally proposed for inclusion in EN 1993-1-5. The rules allow the utilisation of quite long loaded lengths and accordingly quite high resistance can be achieved. This may make it possible to launch bridges with parts of the concrete slab or the reinforcement in place. For the twin-girder bridge of Part I of this Design Manual, these two possibilities have been studied and the results are compared. If it is useful to have the concrete slab or the reinforcement already in place, the outcomes of the COMBRI research project are very helpful and may lead to more economic solutions.

References

[1] ACHE: Asociación Científico técnica del Hormigón Estructural: Comprobación de un Tabellero mixto. Comisión 5, Grupoide Trabajo 5/3 “Puentes Mixtos”, Madrid, Spain, 2006.

[2] Allmeier, S.; Frenzel, J.; Schiefer, S.; Seidl, G.; Weber, J.: Innovation im Verbundbrückenbau - Talbrücke Oberhartmannsreuth. Stahlbau 69 (2000), No. 9, pp. 707-713.

[3] ARS: Allgemeines Rundschreiben Straßenbau 12/03, 2003.

[4] BASt: Bundesanstalt für Straßenwesen (Federal Highway Research Institute): Summary Statistics of Traffic Data in Germany, 2006.

[5] Bernabeu Larena, J.: Evolución tipológica y estética de los puentes mixtos en Europa. Tesis Doctoral, Departamento de Mecánica de Medios Continuos y Teoría de Estructuras. Escuela Técnica Superior de Ingenieros de Caminos, Canales y Puertos Universidad Politécnica de Madrid, Madrid, Spain, 2004.

[6] Bornscheuer, B.; Eisele, S.: Die Nesenbachtalbrücke - Vom Wettbewerb bis zur Ausschreibung. Stahlbau 67 (1998), No. 11, pp. 827-830.

[7] Braun, A.; Seidl, G.; Weizenegger, M.: Rahmentragwerke im Brückenbau - Konstruktion, Berechnung und volkswirtschaftliche Betrachtung. Beton- und Stahlbetonbau 101 (2006), No. 3, pp. 187-197.

[8] Breuninger, U.: Zum Tragverhalten liegender Kopfbolzendübel unter Längsschubbeanspruchung. Dissertation, Mitteilung Nr. 2000-1 des Instituts für Konstruktion und Entwurf, Universität Stuttgart, Germany, 2000.

[9] Bro 2004: Swedish design code for road bridges, 2004.

[10] Bundesministerium für Verkehr: Straßenbrücken in Stahl-Beton-Verbundbauweise. Bundesministerium für Verkehr, Abteilung Straßenbau, Referat StB 25, Bonn 1997.

[11] Bundesministerium für Verkehr, Bau- und Wohnungswesen: Brücken und Tunnel der Bundesfernstraßen 2001. Deutscher Bundes-Verlag, Köln, 2001.

[12] Bundesministerium für Verkehr, Bau- und Wohnungswesen: Brücken und Tunnel der Bundesfernstraßen 2002. Deutscher Bundes-Verlag, Köln, 2002.

[13] Bundesministerium für Verkehr, Bau- und Wohnungswesen: Brücken und Tunnel der Bundesfernstraßen 2004. Deutscher Bundes-Verlag, Köln, 2004.

[14] Bundesministerium für Verkehr, Bau- und Wohnungswesen: Brücken und Tunnel der Bundesfernstraßen 2006. Deutscher Bundes-Verlag, Köln, 2006.

[15] COMBRI: Competitive Steel and Composite Bridges by Improved Steel Plated Structures. Final Report, RFCS research project RFS-CR-03018, 2007.

[16] COMBRI+: COMBRI Design Manual - Part I: Application of Eurocode rules. RFCS project RFS2-CT-2007-00031, 2008.

[17] Crespo Rodríguez, P.: Verification of a composite bridge deck according to the Spanish RPX code and Eurocode 4 - Comparative analysis. Third International Meeting on Composite Bridges, Madrid, Spain, 2001, pp. 479-496.

[18] Denzer, G.; Gräßlin, W.; Hanswille, G.; Schmidtmann, W.: Die Talbrücke über die Wilde Gera - Erfahrungen bei der Planung und Ausführung von Talbrücken mit einteiligen Verbundquerschnitten. Stahlbau 69 (2000), No. 11, pp. 842-850.

[19] Denzer, G.; Schmackpfeffer, H.: Entwicklungen im Stahlverbundbrückenbau - Autobahnbrücken mit einteiligen Verbundquerschnitten. Stahlbau 74 (2005), No. 9, pp. 649-656.

[20] Deutsche Bahn AG: Facts and Figures of the Annual Report 2007, 2008.

[21] Deutsche-Einheit-Fernstraßenplanungs- und -bau GmbH: Brückenbauwerke in den neuen Bundesländern. Ernst & Sohn Verlag, Berlin, 2004.

[22] Deutsche-Einheit-Fernstraßenplanungs- und -bau GmbH: Acht Großbrücken an der A73. Hubert von Brunn, Berlin, 2007.

[23] DIN-Fachbericht 103: Stahlbrücken. Edition March 2003.

[24] Doss, W.; Gebeshuber, A.; Friedrich, N.; Schmitt, V.; Seidl, G.; Weizenegger, M.: VFT-Bauweise - Entwicklung von Verbundfertigteilträger im Brückenbau. Beton- und Stahlbetonbau 96 (2001), No. 4, pp. 171-180.

[25] Dürr, A.: Zur Ermüdungsfestigkeit von Schweißkonstruktionen aus höherfesten Baustählen bei Anwendung von UIT-Nachbehandlung. Dissertation, Mitteilung Nr. 2006-3 des Instituts für Konstruktion und Entwurf, Universität Stuttgart, Germany, 2006.

[26] EBPlate: A piece of software developed in the frame of the COMBRI research project [15]. Its aim is to assess the elastic critical stresses of plates. ***EB****Plate* is free of charge and can be downloaded from the web site of cticm: www.cticm.com

[27] Eilzer, W.; Reintjes, K.-H.; Pötzsch, D.; Schreiber, O.: Entwurf und Ausführung der Seidewitztalbrücke im Zuge der BAB A 17. Stahlbau 75 (2006), No. 2, pp. 117–127.

[28] EN 1990/A1 Eurocode: Basis of structural design – Application for bridges, December 2005.

[29] EN 1991-2: Eurocode 1: Actions on structures – Part 2: Traffic loads on bridges, September 2003.

[30] EN 1993-1-1: Eurocode 3: Design of steel structures – Part 1-1: General rules and rules for buildings, May 2005.

[31] EN 1993-1-5: Eurocode 3: Design of steel structures – Part 1-5: Plated structural elements, October 2006.

[32] EN 1993-1-9: Eurocode 3: Design of steel structures – Part 1-9: Fatigue, May 2005.

[33] EN 1993-1-10: Eurocode 3: Design of steel structures – Part 1-10: Material toughness and through-thickness properties, May 2005.

[34] EN 1993-1-12: Eurocode 3: Design of steel structures - Part 1-12: Additional rules for the extension of EN 1993 up to steel grades S700, February 2007.

[35] EN 1993-2: Eurocode 3: Design of steel structures – Part 2: Steel Bridges, October 2006.

[36] EN 1994-2: Eurocode 4: Design of composite steel and concrete structures – Part 2: General rules and rules for bridges, October 2005.

[37] EN 10025: Hot rolled products of structural steels, November 2004.

[38] EN 10164: Steel products with improved deformation properties perpendicular to the surface of the product – Technical delivery conditions, December 2004.

[39] Hanswille, G., Sedlacek, G.: Steel and Composite Bridges in Germany – State of the Art. Norwegian Steel Conference, Oslo, Norway, October 18th, 2007.

[40] Hertle, R.: Zur dynamischen Analyse von schubweich und diskret gekoppelten Mehrschichtenträgern. Dissertation, Berichte aus dem Konstruktiven Ingenieurbau No. 2/1992, TU München, Germany, 1992.

[41] Hilgendorff, K.-D.; Neumann, W.; Reitz, D.; Schmitz, C.: Talbrücke Elben - Eine Stahlverbundbrücke mit einteiligem Querschnitt. Stahlbau 76 (2007), No. 5, pp. 320-335.

[42] IAP: Instrucción sobre las acciones a considerar en el proyecto de puentes de carretera. Ministerio de Fomento, Dirección General de Carreteras, Madrid, Spain, 1998.

[43] Ibach, H.: Zum Kriechen und Schwinden von Verbundbrücken auf Grundlage der Eurocodes. Dissertation, Berichte aus dem Konstruktiven Ingenieurbau No. 2/2001, TU München, Germany, 2001.

[44] Johansson, B.: Buckling resistance of structures of high strength steel. IABSE Structural Engineering Documents 8, 2005, pp. 120-128.

[45] Johansson, B.; Maquoi, R.; Sedlacek, G.; Müller, C.; Beg, D.: Commentary and worked examples to EN 1993-1-5 "Plated structural elements". Joint report JRC-ECCS, 2007.

[46] Kuhlmann, U.; Detzel, A.: Verbundbrücken. In: Mehlhorn, G. (Hrsg.): Handbuch Brücken, Springer Verlag, Berlin, Germany, 2007, pp. 209-219.

[47] Kuhlmann, U.; Dürr, A.; Roos, F.: Ermüdungsnachweis für Straßen-Verbundbrücken nach DIN-Fachbericht. Stahlbau 72 (2003), No. 9, pp. 679-682.

[48] Kuhlmann, U.; Ehmann, J.; Raichle, J.: Messungen an der Nesenbachtalbrücke. Final Report, Mitteilung Nr. 2004-16X des Instituts für Konstruktion und Entwurf, Universität Stuttgart, Germany, 2004.

[49] Kulka, H.; Schaumann, P.: Neue Entwicklungen im Verbundbrückenbau. Straßen und Tiefbau 45 (1991), No. 5, pp. 6-16.

[50] Langen, T.; Pfisterer, H.; Skusa, F.; Weber, J.: Größte Doppelverbund-Straßenbrücke Deutschlands – Die Innbrücke Neuötting. Stahlbau 69 (2000), No. 11, pp. 833-841.

[51] Llombart Jaques, J.A.; Revoltós Fort, J.; Couto Wörner, S.: Puente sobre el río Tajo, en el embalse de Alcántara (Arcos de Alconétar). Hormigón y Acero Nº 242, 4.er Trimestre (2006), Madrid, Spain.

[52] Manterola Armisén, J.: Composite arch bridges. Proceedings of the 3rd International Meeting on Composite Bridges (Hrsg.: Martínez Calzón, J.), Madrid, Spain, 2001, pp. 173-185.

[53] Manterola Armisén, J.: New proposals in steel bridges and footbridges. Proceedings of the 5th International Symposium on Steel Bridges, Barcelona, Spain, March 5th-7th, 2003.

[54] Martínez Calzón, J.: Strict box composite bridges - A new design of the optimum use of composite typology. Proceedings of the 12th Annual International Bridge Conference, Pittsburg, USA, 1995.

[55] Martínez Calzón, J.: The abacus system for the launching of large span constant edge composite bridges - Types and possibilities. Proceedings of the 3rd International Meeting on Composite Bridges (Hrsg.: Martínez Calzón, J.), Madrid, Spain, 2001, pp. 219-231.

[56] Martínez Cutillas, A.: Aplicación de los métodos generales de cálculo no lineal al estudio de los puentes mixtos. Proceedings of the 3rd International Meeting on Composite Bridges (Hrsg.: Martínez Calzón, J.), Madrid, Spain, 2001, pp. 234-261.

[57] Ramberger, G.; Aigner, F.: Stahlbrücken. In: Mehlhorn, G. (Hrsg.): Handbuch Brücken, Springer Verlag, Berlin, Germany, 2007, pp. 828-862.

[58] Millanes Mato, F.: Comparative analysis of double composite action launched solutions and prestressed solutions in high speed railway viaduct. Proceedings of the 3rd International Meeting on Composite Bridges (Hrsg.: Martínez Calzón, J.), Madrid, Spain, 2001, pp. 383-404.

[59] Millanes Mato F., Pascual, J.: The viaduct across the “Arroyo de las Piedras” in the high speed line between Córdoba and Málaga - An innovative solution for the first high speed line steel concrete composite bridge in Spain. Proceedings of the 5th International Symposium on Steel Bridges, Barcelona, Spain, March 5th-7th, 2003.

[60] Millanes Mato, F.: Construir en acero los puentes de luces medias. Asociación para la Promoción Técnica del Acero, APTA, Madrid, Spain, 2006 (http://www.apta.com.es/pdf /Jornada%202004/francisco_millanes.pdf).

[61] Millanes Mato, F.; Pascual Santos, J.; Ortega Cornejo, M.: Viaducto “Arroyo las Piedras” - Primer viaducto mixto de las Líneas de Alta Velocidad Españolas. Hormigón y Acero Nº 243, 1.er Trimestre (2007), Madrid, Spain.

[62] Nather, F.: Stahlbrücken mit Doppelverbund in Deutschland - Überblick und Ergebnisse von Forschungsaufträgen. Bauingenieur 72 (1997), pp. 131-141.

[63] Ndogmo, J.: Doppelverbundbrücken im Bau- und Endzustand. Stahlbau 75 (2006), No. 8, pp. 670-677.

[64] Neuner, F.: Zur Berechnung prismatoidisch gefalteter Flächentragwerke unter besonderer Berücksichtigung elastischer Fugen. Dissertation, Berichte aus dem Konstruktiven Ingenieurbau No. 1/93, TU München, Germany, 1993.

[65] OTUA 1997: Les aciers thermomécaniques. Documents scientifiques et techniques de l'AFPC (Association Française Pour la Construction) et de l'OTUA (Office Technique pour l'Utilisation de l'Acier). ISSN 0150-6900, May 1997.

[66] Pantaleón Prieto, M.J.; J. A., Ramos Gutiérrez, O. R.; Ortega Carreras. G.; Martínez García, J. M.: Viaducto de Escaleritas en Las Palmas de Gran Canaria. Hormigón y Acero Nº 244, 2.er Trimestre (2007), Madrid, Spain.

[67] Pauser, A.: Brücken in Wien. Springer Verlag, Wien, Austria, 2005.

[68] Petel, A.; Davaine, L.: Design of bracing frames for the twin-girder bridge. Background document COMBRI+054, RFCS project RFS2-CT-2007-00031, 2008.

[69] Petel, A.; Davaine, L.; Braun, B.: Launching of the composite twin-girder bridge. Background document COMBRI+037, RFCS project RFS2-CT-2007-00031, 2008.

[70] Peter, J.; Wetzel, R.; Bach, T.: Die Reichenbachtalbrücke der Thüringer Waldautobahn A 71. Stahlbau 72 (2003), No. 3, pp. 127-138.

[71] RASQ: Richtlinie für die Anlage von Straßen - Teil: Querschnitte, 1996.

[72] Reintjes, K.-H.: Die Bauweise der dichten Kleinkästen im Verbundbrückenbau. Stahlbau 74 (2005), No. 9, pp. 657-663.

[73] Reintjes, K.-H.; Gebert, G.: Das Zügelgurt-Fachwerk der Muldebrücke Wurzen. Stahlbau 75 (2006), No. 8, pp. 613-623.

[74] Reintjes, K.-H.; Schreiber, O.: Die Stahlverbundbrücke über die Müglitz im Zuge der Autobahn Dresden–Prag - Entwurf und Ausführung. Stahlbau 73 (2004), No. 1, pp. 4-13.

[75] Roesler, H.; Schmidt, D.: Die neue Leinetalbrücke bei Heiligenstadt. Stahlbau 72 (2003), No. 6, pp. 422–425.

[76] Roik, K.-H.: Taking Steel Structures into the 20th Century. Symposium, Luxemburg, 1990.

[77] RPM. Recomendaciones para el proyecto de puentes metálicos para carreteras. Ministerio de Fomento, Dirección General de Carreteras, Madrid, Spain, 1996.

[78] RPX. Recomendaciones para el proyecto de puentes mixtos para carreteras. Ministerio de Fomento, Dirección General de Carreteras, Madrid, Spain, 1996.

[79] Manual de aplicación de las recomendaciones RPM-RPX/95. Ministerio de Fomento, Dirección General de Carreteras, Madrid, Spain, 2000.

[80] Rui-Wamba, J.: The Spanish contribution to design and construction of steel bridges. Proceedings of the 5th International Symposium on Steel Bridges, Barcelona, Spain, March 5th-7th, 2003.

[81] Schmackpfeffer, H.: Typenentwürfe für Brücken in Stahlverbundbauweise im mittleren Stützweitenbereich (Teil I). Stahlbau 68 (1999), No. 7, pp. 264-276.

[82] Schmackpfeffer, H.: Typenentwürfe für Brücken in Stahlverbundbauweise im mittleren Stützweitenbereich (Teil II). Stahlbau 70 (2001), No. 4, pp. 429-435.

[83] Schmidtmann, W.; Wagner, P.: Die Werratalbrücke Einhausen – neue Wege beim Bau einer Autobahn-Verbundbrücke mit getrennten Überbauten. Stahlbau 74 (2005), No. 10, pp. 735-748.

[84] Schmitt, V.: Untersuchungen zum verstärkten Einsatz von Stahlverbund-konstruktionen bei Brücken kleiner und mittlerer Stützweiten. Final report, FOSTA research project P629, 2005.

[85] Schmitt, V.; Seidl, G.: Verbundfertigteil-Bauweise im Brückenbau. Stahlbau 70 (2001), No. 8, pp. 546-553.

[86] Schmitt, V.; Seidl, G.; Hever, M.; Zapfe, C.: Verbundbrücke Pöcking – Innovative VFT-Träger mit Betondübeln. Stahlbau 73 (2004), No. 6, pp. 387-393.

[87] SUSBRI: Sustainable Bridges: European Railway Bridge Demography. Document WP1-02-T-040601-F D 1.2, EU research proejct TIP3-CT-2003-001653, 2004.

[88] Tschumi, M.; Grüter, R.; Ramondenc, P.: Fortschritte im Eisenbahn-Stahlbrückenbau Europas. Stahlbau 67 (1998), No. 8, pp. 612-626.

[89] Veljkovic, M.; Johansson B.: Design of hybrid steel girders. Proceedings of the Third European Conference on Steel Structures (Vol. 1), Coimbra, Portugal, September 19th-20th, 2002.

List of figures

List of tables