Economics of Steel Framed Buildings in Europe (ESE)

STRATEGIES FOR STEEL FRAMED BUILDINGS IN EUROPE (USING THE BUILDING COST TOOL – ACE)

Report To	RFCS –Contract RFSR-ct-2007-00037
Document:	RT1336
Version:	06
Date:	October 2010

FOREWORD

This document is one of the deliverables of the project 'Economics of Steel Framed Buildings in Europe (ESE)', sponsored by the Research Fund for Coal and Steel via grant No. RFSR-CT-2007-0037. It is intended as an aid to designers and procurers of steel framed buildings so that they may specify as economic a structure as possible for their requirements. It is intended to be used with the web-based design tool known as ACE, which was developed as part of the project.

The document has been compiled by Dr J W Rackham of the Steel Construction Institute, with contributions and comments from other partners on the project, including:

Dr Bassam Burgan (Co-ordinator)	The Steel Construction Institute
Professor Andrzej Garstecki	Poznan University of Technology
Dr Maciej Klósak	Poznan University of Technology
Ir Francoise Lecomte-Labory	Arcelor Mittal Global R & D (Esch)
Ir Bennie Potjes	Bouwen met Staal
Ir Jo Naessens	Staalinfocentrum

The project was approved and overseen by RFCS Technical Group TGS8.

CONTENTS Page No

SUMMARY

This document is intended as an aid to designers and procurers of steel framed buildings in Europe to achieve efficient and competitive designs. It covers single-storey industrial buildings and multi-storey commercial and residential buildings.

The document sets out the general benefits of steel construction and highlights the particular benefits for the specific types of building covered. It gives a summary of the web-based cost tool and explains the parameters affecting the cost of construction. The options in the software for designing different parts of a structure, such as foundations, framing and floor type etc. are explained, so that cost comparisons may be made.

The main building types are covered in detail. For multi-storey residential and commercial buildings, general structural framing advice is given, followed by information on the optimum design of alternative practical floor types. Key aspects of the floor construction are explained, and guidance is given on sizing of the structural members and other main components. An optimum design strategy for the framing of each floor type is recommended for use with the building cost tool, ACE. Additional advice is given on fire safety, acoustic floor treatments for residential buildings and on the options for services integration in commercial buildings.

Advice on concept design is given for single-storey industrial buildings, and different framing options are presented. Advice is confined to pitched and flat roof portal frames, as this is the most commonly used system for this building type. Many variations on pitched roof portals are covered, and guidance is provided on their most efficient use. A design table for single span single-storey pitched roof portal frames is presented for estimating purposes. Advice is also given on practical connections and fire safety.

1 INTRODUCTION

There have been significant developments in the structural design of steel-framed buildings in recent years and design information now exists in publications such as the Eurocodes and the output from various RFCS/ECSC projects. The Eurocodes provide the designer with a wide range of approaches to the design of steel-framed buildings. However, information on the building cost of steel solutions is not readily available. Often, steel has not been specified in construction because designers have:

- not considered steel as a possible solution, owing to its perceived complexity and their unfamiliarity with its economic design, or
- prepared a steel solution but have rejected it at the preliminary design stage, owing to the use of an inappropriate design approach - making it uneconomical.

A market survey carried out in nine European countries[(1)] showed that there was a general need for information on costs and economics in steel construction.

There are both direct and indirect relationships between structural design efficiency and cost. What might be considered as an efficient design in terms of structural performance may not necessarily be cost-effective overall (e.g., a structurally efficient un-braced frame with composite beam-to-column joints may be more costly to construct owing to the complexity of the connections).

As well as identifying factors that affect direct building costs (i.e., weight of structural materials, building height, fire protection, etc.), it is important to consider other costs that are impacted by the structural form used. For example, although it is commonly perceived that one of the advantages of steel is the speed of construction, the effect of speed on cost has sometimes been overlooked (cost of site management on-site facilities, reduced cost of borrowing to finance the building development and financial benefit of early rental to tenants).

The competitiveness of steel construction is also strongly influenced by general market conditions, which has been volatile in recent years. A high demand from China over the past few years has caused steel prices throughout the world to climb at unprecedented rates, followed by a fall because of the recession. Often, structural steel solutions are perceived as more expensive compared to those using other materials but there is no simple means for architects and procurers of buildings to check this. A project was set up to address this need and to provide a web-based costing tool (ACE) for designers of steel framed buildings in Europe.

ACE enables users to develop cost-effective steel solutions at the concept stages of a project. It has been developed using the latest cost-modelling techniques for the overall building cost, and includes a simple facility for incorporating up-to-date cost rates. Its scope includes single-storey industrial buildings, multi-storey commercial and residential buildings, and it permits the overall cost-optimisation of these building types by enabling comparisons to be made. This can support designers in convincing decision makers and investors to work with steel in these sectors. The tool has been validated using cost and construction data from exemplar buildings of each three building types covered within the scope of the project.

This document gives advice to designers on strategies for competitive construction in the sectors and building types within the scope of the tool. The document is intended to be used alongside the web-based tool. It gives practical guidance on design issues for each type of building and form of construction to enable the most economic choice of

framing arrangements and sizing of components to be made. This should reduce the time that practitioners need to spend on selecting an economic scheme.

2 THE BENEFITS OF USING STEEL FRAMED BUILDINGS

2.1 Sustainability

At least 50% of current EU steel production comes from recycled content and steel is 100% recyclable. The small amount of waste that is created in manufacture and construction is recycled. All steel construction components can be either re-used or recycled at the end of their life. The weight of a steel frame is light relative to other alternatives, and this enables smaller foundations to be used. Although this has an obvious cost benefit, it also enables more efficient use of 'brownfield' sites (land previously built on), which can often have poor ground conditions. There are numerous floor, roof and cladding systems which can be used with a steel frame, and these can provide high levels of insulation and air-tightness. This minimises energy use during the life of the building, and hence minimises CO_2 emissions.

2.2 Manufacture in controlled conditions off-site

Steel elements and components are manufactured in factory conditions where they are made to tight tolerances. The process utilises electronic transfer of data from the designer to the manufacturer, which improves quality control and can accommodate design changes more readily. This leads to a product of high quality and assists the subsequent fit-out of the building. The process is unaffected by the weather, which leads to a more reliable construction programme and less risk for the client. Deliveries of the completed steelwork to site need not be made until just before they are required, which minimises the storage requirements on site. This can be very important for congested sites in built-up areas. There is also a much reduced demand for water on site with steel framed construction.

2.3 Speed of construction

Steel construction can be much faster than the alternatives. For example, the floors and frame in a typical 8-storey commercial office building can be built up to 40% faster than a reinforced concrete alternative. The fabrication of steel frame components in the factory can coincide with site preparation and foundation construction. The quick erection of the steel frame allows the cladding and roof to be constructed early in the programme. This creates dry conditions for the following trades, which can also start earlier.

The financial benefits from faster construction are:

- reduced site facilities and management costs – the hire of site buildings, personnel and craneage etc. will be reduced
- earlier income from the new facility – this will reduce the cash flow needed
- reduced interest payments

2.4 Flexibility of use

Because of steel's inherent strength and stiffness, long spans can be achieved readily which provide large areas of uninterrupted space. This allows various arrangements of internal use, which can be adapted to suit a client's changing requirements. A steel framed building can often be extended relatively easily because the components of the

frame can be modified to attach to a new frame. Floor systems used with steel frames can accommodate openings readily, and the beams themselves can be manufactured with holes in them. This provides considerable flexibility for service layouts.

2.5 Particular benefits of steel in residential buildings

The residential sector accounts for 25% of construction output in the EU; within this overall market, apartments and larger residential buildings represent between 15 to 50% of homes in individual countries.

The housing and residential sector demands energy efficient, adaptable and higher quality buildings. There are also important regional and demographical trends that demand different types of housing, including single person accommodation and higher density living.

Further key benefits relating to residential accommodation include:

- **Thermal insulation** - Modern insulation materials used in warm frame construction produce low U-values and high standards of air-tightness which can result in a warm, draught free internal environment and reduced energy bills for the occupant.
- **Acoustic performance** - In lightweight steel construction, the presence of a cavity and the isolation achieved by multiple layers of materials and resilient layers provides excellent acoustic performance.
- **Durability** - Dry construction and the use of a framing material with no long term creep or shrinkage movement will minimise cracking and damage to finishes during the drying out period.

The speed of construction can be particularly important in large residential buildings such as student accommodation, which must be completed during a short window outside the academic year.

2.6 Particular benefits of steel construction in commercial buildings

For commercial buildings, the particular benefits of steel construction include:

- The ability to offer large column-free floor areas
- Easy Integration of services to minimise the floor zone
- Long-term flexibility to modify the building so as to cope with changes in use
- Minimum site storage enabled by a high degree of off-site fabrication

2.7 Particular benefits of steel construction in industrial buildings

For industrial buildings, the benefits of steel construction include:

- The ability to provide relatively lightweight long span structures quickly and economically
- Scope for providing attractive structures with architectural expression
- Provision of a structure that is easily adapted and extended for future use

3 STEEL FRAMED MULTI-STOREY RESIDENTIAL BUILDINGS

3.1 Framing options

For multi-storey residential buildings requiring open plan space, a steel structure is an ideal solution. They can be used with various types of floor construction, including composite floors, precast concrete slabs, integrated (or slim floor) construction and inverted steel beams – see Section 3.2. Beams in residential buildings are usually arranged to align with walls between dwellings (separating wall), but floor systems with integrated beams can accommodate internal walls anywhere. Columns are normally HE/UKC sections or Square Hollow Sections and are designed to fit within the width of a separating wall, where possible. Most multi-storey frames are three dimensional structures with orthogonal horizontal grids, i.e., with primary and secondary beams in two directions at 90°. Sway stability and the resistance to horizontal forces need to be considered separately in these two principal directions. Different solutions may be appropriate in the two directions.

Residential buildings that have to accommodate parking at ground level, or within a basement, will require a grid that is compatible with the access and parking bay layout. Alternatively, heavy transfer beams can be used to span the car park area, and so provide freedom of column layouts above the car park, but this would be expensive. The layout of car parking bays will in part be determined by access arrangements, whether through the front, rear, or side of properties, and the consequent turning radii and sight lines that have to be accommodated. Selection of one-or two-way circulation regimes also has a major influence of space provision. Commonly, car park bays will be located on two sides of a central circulation route. Where car park bays are perpendicular to the long walls, this route will normally be a minimum of 6100 mm wide, and bay sizes will be in the range 2400 - 2800 mm wide $\times$ 4800 - 5800 mm long (the larger dimensions representing relatively generous provision). A typical arrangement for a multi-storey building is shown in Figure 3.1.

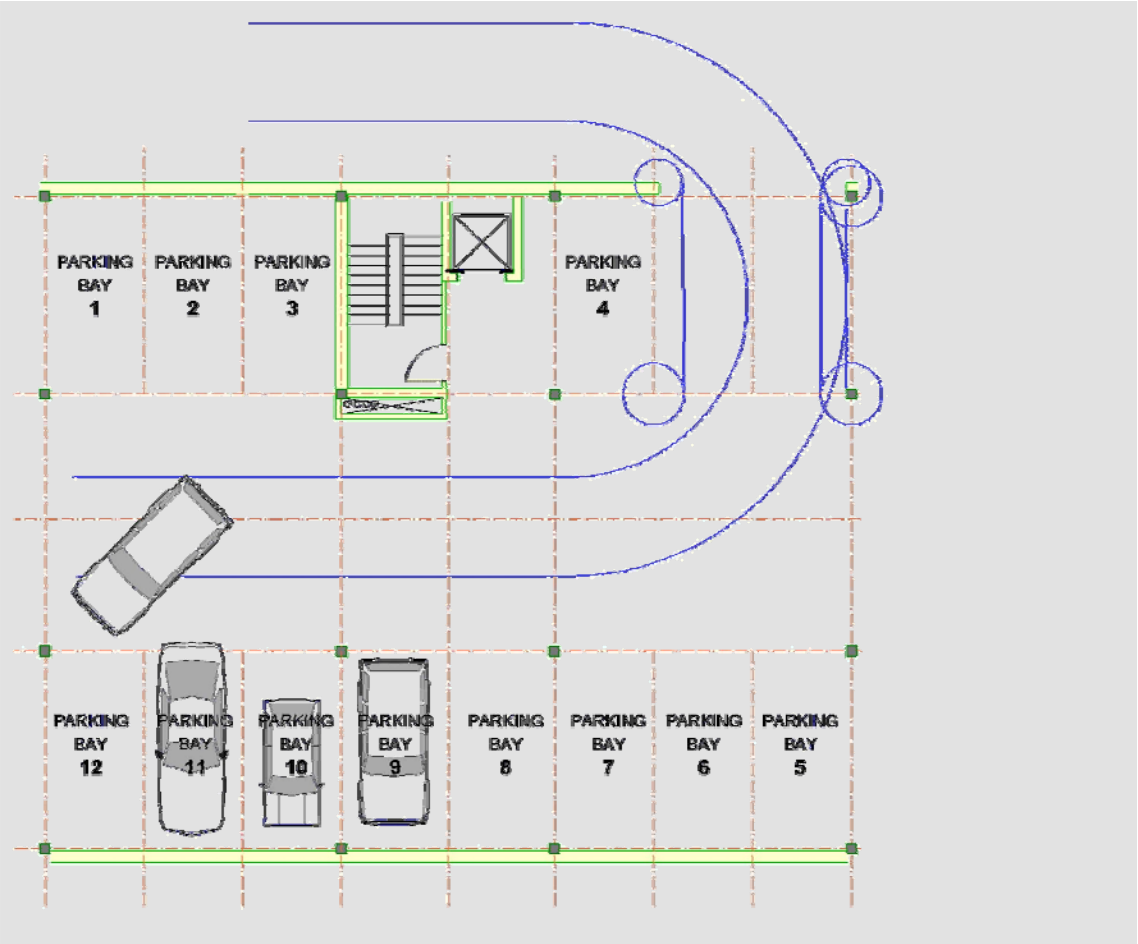

Figure 3.1 Typical arrangement for a basement car park in a multi-storey residential building

Buildings which do not need to provide car parking within the building plan will have more freedom for cores and bracing arrangements. Frames are often classified as braced or unbraced, depending on whether physical bracing is provided, or whether the structure is joined to a stiff core, which usually encompasses lifts, vertical services and stairs. Examples of bracing and the use of a concrete core are shown in Figure 3.2 and Figure 3.3. Where cross-bracing is unacceptable for the use of the building, it may be replaced by bracing in the form of stability portals. Braced frames are most economically designed using simple connections, where the beam to column connections are nominally pinned and only transmit shear from the beam ends to the columns, as shown in Figure 3.4(a). They are also relatively easy to analyse.

The stiff core or braced bays need to be positioned roughly symmetrically about the overall plan of the building, because asymmetrical bracing layouts will cause increased forces in the bracing. Where the building is divided into sections by expansion joints, each section should be considered as a separate building. Floors act as diaphragms to transfer the overall horizontal actions to the stiff cores or braced bays. The bracing arrangement should be considered at the concept stage to minimise conflict with the window layout. Cross-flats provide a neat solution in medium rise residential buildings up to about 8 storeys because they can be contained in the walls**.**

Unbraced frames rely on the stiffness and strength of the connections between the beams and the columns to enable them to resist the lateral forces mainly by bending of these elements. They are complex to analyse, use thicker endplates, more bolts and

stiffeners, and more fabrication time to make than 'simple' connections (see Figure 3.4(b). They normally require deep sections to provide the stiffness and strength needed and are not normally appropriate for residential buildings where the floor zone does not need to accommodate many services. The practical limit on this form of construction is normally considered to be about 4 storeys, owing to uneconomical frame element sizes and impractical connection design. Storey heights depend on the choice of floor structure and the specified floor-to-ceiling height, but typical values are 2500 mm (floor-to-ceiling) plus 450 mm to 550 mm (floor zone) – which leads to a storey height of about 3-3.1 m.

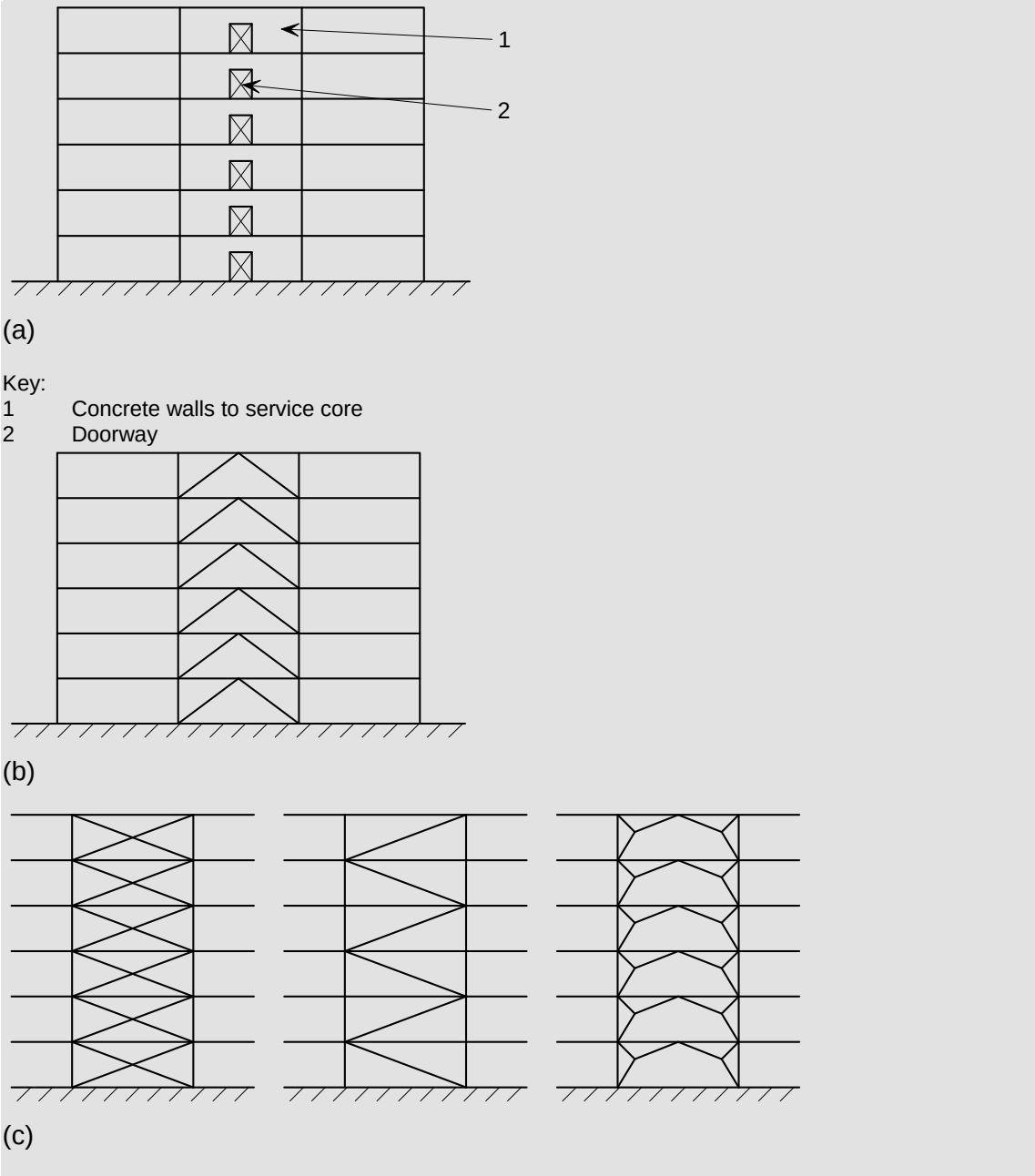

Figure 3.2 Types of braced frame:
(a) Stiff concrete core, (b) Inverted V bracing, (c) Alternative types of triangulated bracing

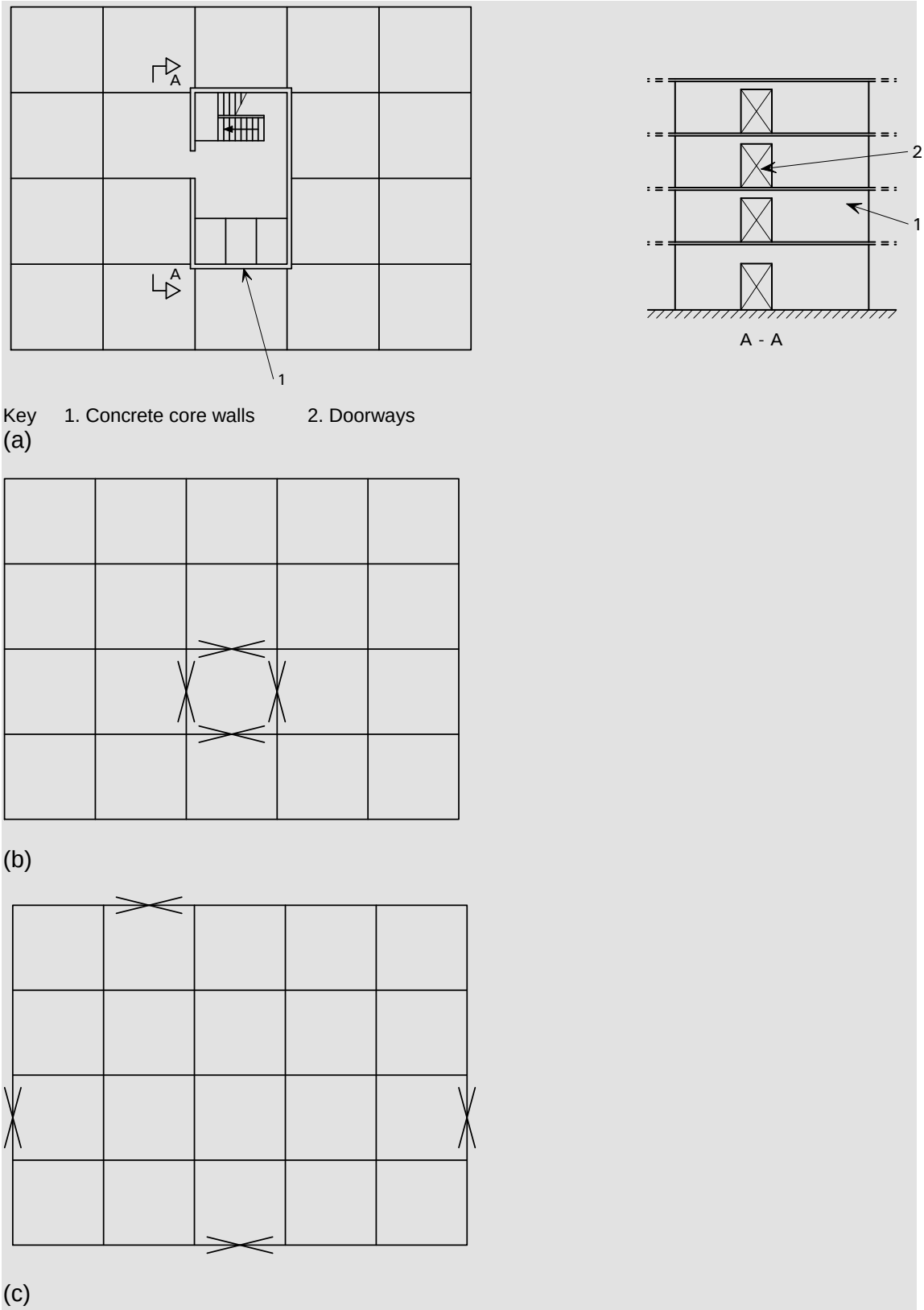

Figure 3.3 Effective positioning of resistance to sway forces:
(a) Concrete core surrounding stairs, lifts, service shafts etc.,
(b) Stiff core of cross braced panels, (c) Stiff panels not grouped as a core

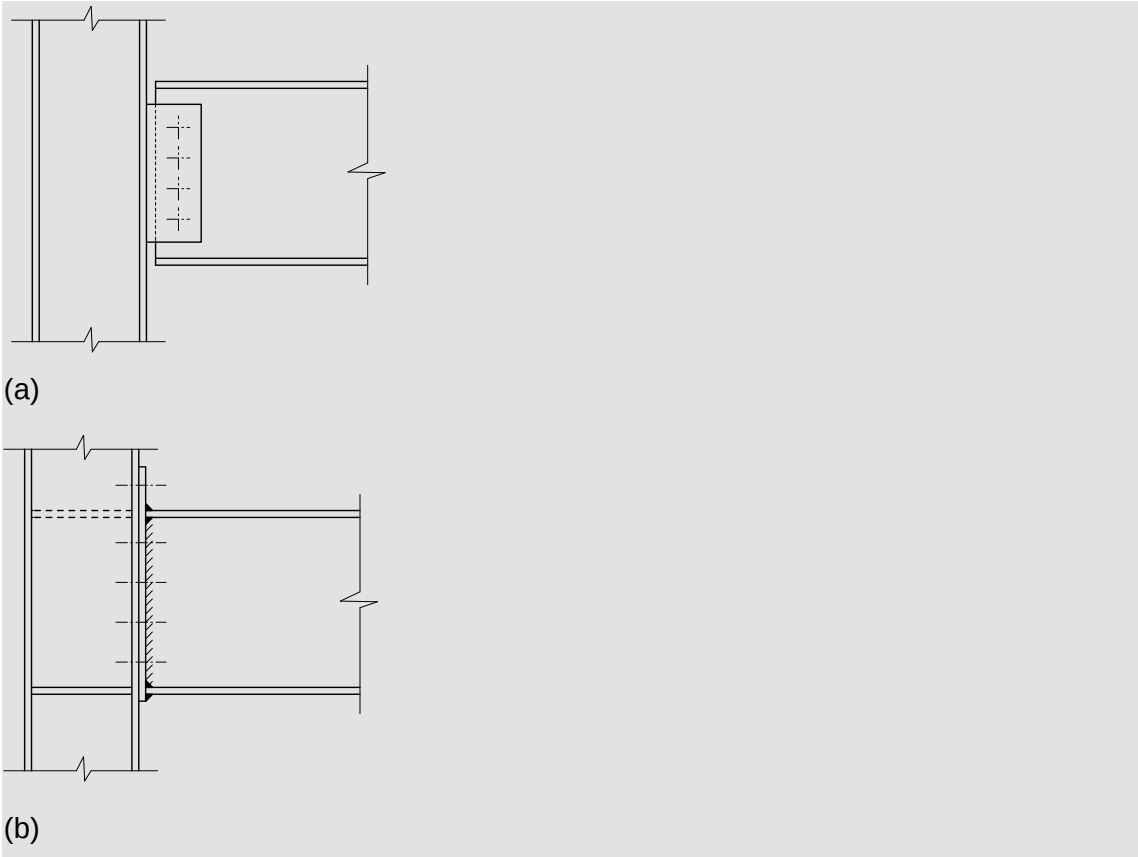

Figure 3.4 Types of beam to column connection: (a) nominally pinned, (b) rigid

Suggested design strategy

For the most economic construction:

- Design a column grid to be compatible with basement/ground floor parking, when there is a parking requirement
- Use braced frames in simple construction
- Use of symmetric bracing arrangements
- Design for 3-3.1 m storey height

3.2 Floor systems and loading

This Section gives details of the floor loading, and describes various floor systems often used in multi-storey residential buildings. The main characteristics of each floor system are described, with guidance on important design issues.

3.2.1 Loading

The principal types of floor loading to be considered in the design of residential buildings are:

- Self weight (including finishes).
- Imposed loads (including higher loads in communal areas).

Typical loads are shown in Table 3.1.

Table 3.1 Typical loadings used in residential buildings

Loading Type	Typical Value (kN/m^2)
Imposed loads:	
Residential use	1.5 to 2.0
Corridors and communal areas	3
Commercial areas	2.5 to 4
Partitions (lightweight)	0.5 to 1.0
Self weights:	
Light steel walls	0.5 to 1.0
Composite floor slabs	2.5 to 3.5
Precast concrete slabs	2.5 to 4

Loading on structures is covered in EN 1991 Eurocode 1 Actions on structures. Recommended values for imposed loads are given in Part 1-1, and for fire loads in Part 1-2. Actions during construction can be found in Part 1-6.

3.2.2 Composite beams and composite slabs with steel decking

Composite beams and slabs with steel decking and in-situ concrete are widely used in steel construction. Composite beams are steel beams designed to act compositely with an in-situ floor slab by the use of welded shear connectors. The shear connectors are normally welded through the deck, but may be pre-welded or shot-fired to the beam. The composite action greatly increases the strength and stiffness of the steel beams, which improves their spanning capability. The steel decking is used to act as permanent formwork and as ‘reinforcement’ to the slab. The decking is an integral part of all the ‘composite’ systems and its design largely depends on the spacing of the beams and the depth of the slab, but is normally governed by the loads (wet weight of concrete, operatives and equipment) it supports during construction.

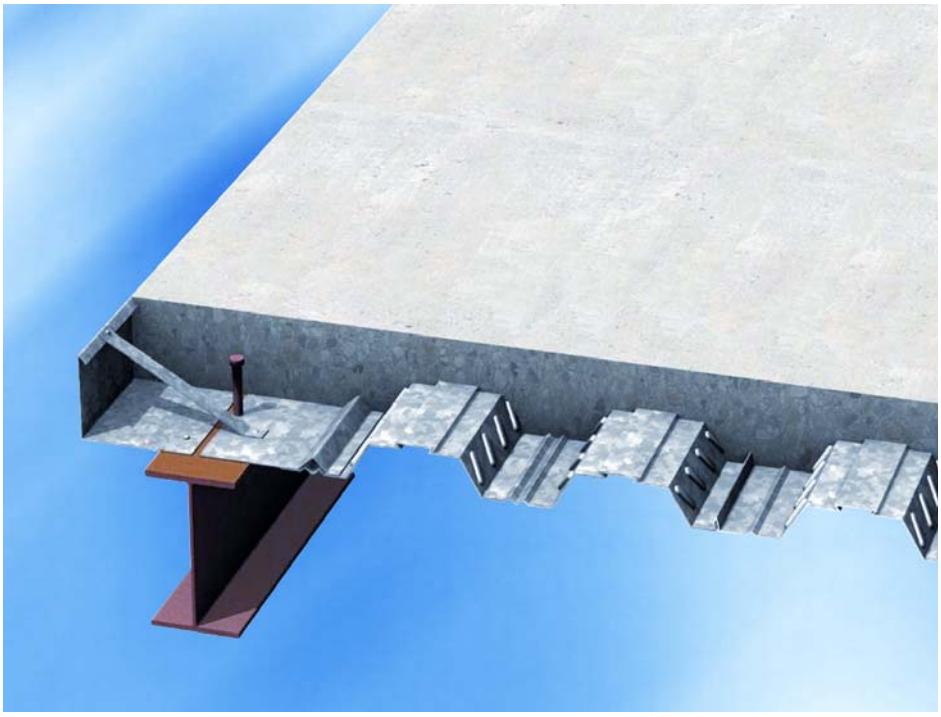

Figure 3.5 Typical composite slab and composite edge beam (mesh omitted for clarity)

Spans of 2.5 to 4.5 m can be achieved by composite floors between beams using steel decking of 50 to 80 mm deep with thicknesses of 0.8 to 1.2 mm. Slab thicknesses are normally in the range 130 to 150 mm for (up to) 60 mm deep decking and 150-170 mm for 80 mm deep decking. No temporary propping is required during construction, provided the depth of the decking is carefully chosen for the span. Composite slabs are relatively shallow for their span (span: depth ratios of up to 32 are possible). For efficient design, the decking needs to be continuous over one or more internal spans, but this may not be possible if studs are pre-welded to the beams. For handling reasons, the decking lengths would normally not exceed about 10 m. For most applications, spacing of the supporting beams needs to be:

- 3 m for 50 mm deep decking
- 3.6 m for 60 mm deep decking
- 4.2 m for 80 mm deep decking

Composite floors are normally reinforced by mesh (such as A142 to A193, which is defined by the steel area in mm^2/m). In some cases additional reinforcing bars are placed in the bottom (trough) of the decking to improve the bending resistance and fire resistance of the slab. The amount of reinforcement increases with the length of the fire resistance period required, but mesh reinforcement of 0.2% of the cross-sectional area of the slab should provide 90 minutes fire resistance. Additional mesh (up to 0.4% for propped decking) is often provided in the slab over the beam to limit cracking of the slab, which often occurs at the supports but does not affect the strength. Span and load capabilities for various slab depths and fire resistance periods for composite slabs are presented in Table 3.2 for 60 mm decking and in Table 3.3 for 80 mm decking.

Table 3.2 Typical design tables for composite floors with 60 mm deep decking

Span Case	Fire resistance (mins)	Slab depth (mm)	Reinforcement (mm^2/m)	Maximum spans (m) for imposed loading			
				t = 0.9 mm		t = 1.2 mm	
				3.5 kN/m^2	5.0 kN/m^2	3.5 kN/m^2	5.0 kN/m^2
Single span decking - no props	60	120	A142	2.8	2.8	3.2	3.2
	90	130	A193	2.7	2.7	3.1	3.0
Double span decking - no props	60	120	A142	3.2	3.2	3.9	3.7
	90	130	A193	3.1	3.1	3.8	3.5
	120	150	A252	2.9	2.9	3.5	3.4
One line of temporary props	60	120	A353*	3.8	3.4	4.0	3.6
	90	130	A353*	3.4	3.1	3.6	3.3
	120	150	A353*	3.1	2.9	3.3	3.0

t = steel thickness of decking

*required for crack control in propped construction

A193 = 193 mm^2/m reinforcement in both directions

Table 3.3 Typical design tables for composite floors with 80 mm deep decking

Span Case	Fire resistance (mins)	Slab depth (mm)	Reinforcement (mm^2/m)	Maximum spans (m) for imposed loading			
				t = 0.9 mm		t = 1.2 mm	
				3.5 kN/m^2	5.0 kN/m^2	3.5 kN/m^2	5.0 kN/m^2
Single span decking - no props	60	150	A193	3.7	3.2	4.1	3.5
	90	160	A252	3.8	3.2	3.9	3.3
Double span decking - no props	60	150	A193	4.2	3.8	4.6	4.1
	90	160	A252	4.1	3.9	4.5	4.0
	120	170	A393	4.0	3.9	4.3	3.9

t = steel thickness of decking

Shallow floors are required for residential buildings, and stocky beams such as UKC, HEA or HEB sections are normally preferred. Typical beam spans are in the range 4.5 – 7.5 metres, with a span: depth ratio in the range 25-30, and an overall floor depth of 500 to 600 mm. This could be reduced if walls can be aligned with beams. An 80 mm deep decking used in slabs of 150 mm deep can achieve 4.5 m span without propping, and can be ideal for planning the internal spaces because the beams can align with the walls. This enables the beams to be incorporated within the walls and facilitates easy fixing of lightweight (steel framed) partitions.

Beam arrangements may involve primary and secondary beams and can be composite in both cases. However, composite primary beams require more shear connectors and reinforcement, and for this reason primary beams are assumed to be non-composite in ACE.

Composite slabs achieve a fire resistance of up to 120 minutes using only mesh reinforcement, provided they are designed as continuous over one or more internal spans. Additional reinforcing bars can be placed in the deck ribs in heavily loaded areas (e.g. plant rooms). Fire protection of the steel beams can be achieved by:

- Board protection.
- Spray protection.
- Intumescent coatings.

Suggested design strategy

For the most economic construction:

- Assume a 130-150 mm concrete slab depth
- Choose the decking thickness to meet span requirements for the grid at, ideally, 2.5-3.75 m spacing of beams (without needing propping)
- Choose a beam span in the range 4.5-7.5 m and use UKC or HE sections with a span: depth ratio in the range 25-30 for composite beams. Where non-composite primary beams are used, a span: depth ratio of 18 is suggested as a trial size.

3.2.3 Downstand beams with precast slabs

Precast concrete floor slabs are supported on the top flange of steel beams in this form of construction, and in some cases, may be designed to act compositely with the steel beams by use of shear connectors that are pre-welded to the top flange, as shown in Figure 3.6. Precast concrete slabs can be used with downstand beams, where the floor slab lies on top of the beam section, or integrated beams, where the steel section lies within the floor slab, as described later. Beam arrangements which maximise the span of the units are likely to be the most efficient. The temporary condition during construction, when the units are placed on one side of the beam only, may govern. The use of downstand beams inevitably produces a greater overall floor zone than with integrated or slimfloor beams.

One of the main design considerations for beams supporting precast concrete slabs is that of the minimum beam width to allow for construction tolerances. This is especially important for composite beams because there must be sufficient space around the shear connectors (between the ends of the precast units) to develop composite action. For this reason, precast slabs are generally used in long span applications with deeper IPE/UB sections, or short span applications with HE/UKC sections. It is recommended that the width of the top flange should be at least 190 mm to provide a suitable minimum bearing length (50-60 mm) for the units. The use of IPE sections will require a deeper floor zone unless beams are aligned with separating walls.

The system with precast concrete slabs that can be analysed using ACE comprises thin solid slabs, also known as 'planks', (50–100 mm thick) supporting an in-situ concrete topping and generally designed to act compositely with the steel beams. Spans are in the range of 2.5 to 4 m.

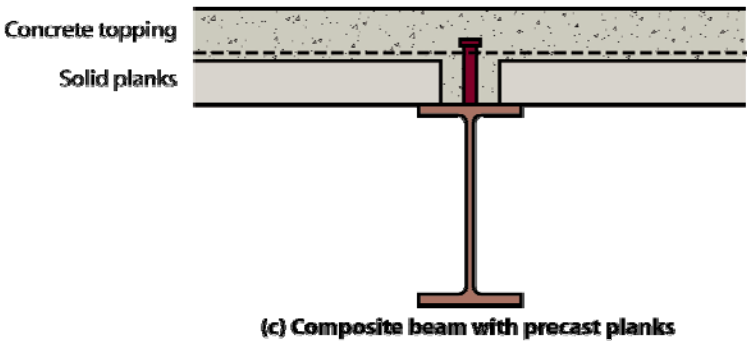

Figure 3.6 Precast concrete planks placed on composite beams

Edge beams are often designed as non-composite, with nominal shear studs provided to meet robustness requirements. Beams parallel to the units cannot be composite.

The concrete topping (60 mm minimum) assists in providing acoustic insulation in residential buildings. However, an additional resilient layer and chipboard walking

surface are still necessary to meet the highest acoustic insulation standards. The concrete topping also assists in satisfying fire resistance and 'robustness' requirements because of the presence of the mesh reinforcement which is placed in the topping.

Steel beams supporting precast concrete slabs can be relatively deep and can be designed for a span: depth ratio of approximately 18 for IPE sections. Deflections will be within normal limits of span/360 under imposed loads.

Precast concrete slabs can achieve up to 90 minutes fire resistance without a concrete topping or up to 120 minutes with a concrete topping and with reinforcing bars embedded in the filled hollow cores. Fire protection of the steel beams can be achieved by:

- Board protection
- Spray protection
- Intumescent coatings

Suggested design strategy

For the most economic construction,

- Maximise the span of the precast units, where possible.
- Use composite beams for a span: depth ratio of approximately 18 for IPE sections, but 25 for UKC/HE sections for scheme design
- Design edge beams as non-composite

3.2.4 Integrated floor beams with composite slabs or precast units

Integrated beams support a precast concrete slab or deep composite slab so that the beam and slab occupy the same depth. These sections are normally constructed using IPE sections cut at mid-height and welded to a bottom flange plate. Other variations which are integrated within the floor depth include:

- HE or UC sections with a welded bottom plate (known as a slim floor beam and covered later in this Section)
- Rolled ASB beams of asymmetric cross section (known as Asymmetric *Slimflor* Beams, and not covered in the software tool)
- RHS with a welded bottom plate, often used for edge beams (not covered specifically in the software tool)
- 'Top Hat Q-beams' fabricated from plates, which have the profile of a top hat in cross-section (not covered specifically in the software tool)

Beam arrangements involving a central spine beam with floors spanning to edge beams will generally be more economic than spanning the slabs or units between parallel transverse beams. Beam span: depth ratios can vary considerably, because of the importance of keeping sections shallow, and within a practical range of 250 to 350 mm. Tie members between the columns are often inverted 'T' sections, which can integrate easily within the floor. Edge beams can either be downstand or integrated beams, according to the architectural requirements. However, RHS sections with a welded bottom plate and sections with a box cell in their shape are very effective at resisting the torsional loads, but can be more expensive to fabricate.

Where integrated beams support hollowcore concrete slabs, as shown in Figure 3.7, the slabs often span a longer distance than the beams, so that the depth of the slab and beam are compatible. A concrete topping is generally used to provide better

structural and dynamic floor properties, a flat surface, good encasement of the beams, and a better acoustic performance. Integrated beams are designed to achieve minimum structural depth. Integrated beams supporting hollowcore slabs are designed so that the slab spans up to 9 m and the beam spans 6 to 7.5 m. The critical design case is often that of torsion acting on the beam during construction, or loading due to unequal adjacent spans.

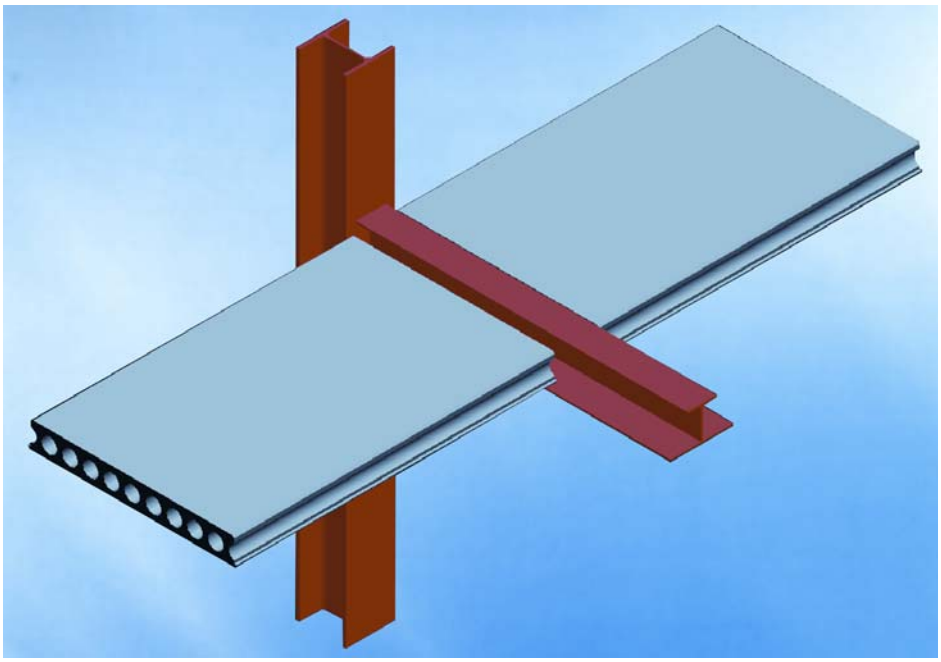

Figure 3.7 Precast concrete slabs placed on an integrated beam

Integrated beams can be used in deep composite slabs, where deep steel decking is designed to act compositely with the concrete slab to create an overall floor depth in the range 300 to 350 mm, as shown in Figure 3.8. Bar reinforcement is placed in the ribs of the decking to provide strength to the floor slab, and for fire resistance. Mesh reinforcement is provided all over the floor in the top of the slab to control cracking over the beams, to spread localised loadings and to improve the fire resistance. Decking spans of up to 6 m can be achieved without requiring temporary propping, and are most economic. Decking spans up to 9-10 m may be achieved with extensive propping, a thicker slab, and large diameter reinforcement in the ribs. The decking profile is typically 190 to 225 mm deep, depending on the product. The minimum depth of concrete over the decking is 70 to 90 mm, which is necessary for structural performance, but is mainly required to achieve the appropriate fire resistance. The span: depth ratio of the deep composite slabs should be limited to 25 to ensure adequate serviceability performance. Integrated beams are ideally spaced at about 6 m, to avoid propping the deck. The design of the beams is normally governed by torsion acting during construction, or by serviceability criteria.

Reinforcement is needed across or through the web of integrated beams with either precast units or composite slabs in order to tie the floor from one side of the beam to the other. This is necessary to provide robustness to the construction, and so minimise the risk of progressive collapse. With composite slabs, there is normally sufficient concrete topping above the beam for mesh reinforcement to be placed across the beam. This may also be possible with precast units, but, when there is no topping, reinforcing bars have to be placed through the beam web and into slots in the units.

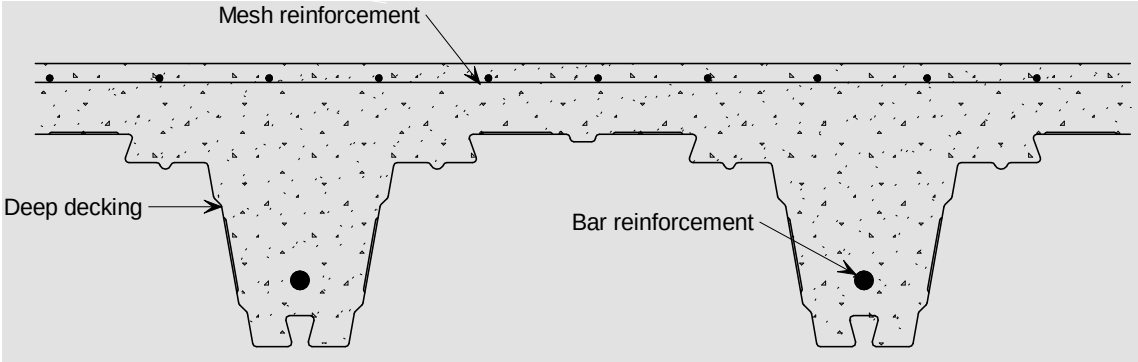

Figure 3.8 Typical composite slab with deep decking

The partial encasement of the integrated section in concrete achieves up to 60 minutes fire resistance. Additional fire protection can be applied to the bottom flange by various methods, such as:

- Board protection, for example by plasterboard.
- Intumescent coatings applied on site or in the factory.

Boards are most practical for columns. Intumescent coatings maintain the profile of the member and are thin (1 to 2 mm thick). These coatings can be applied off-site.

Integrated beams with hollowcore slabs and a concrete topping or deep composite slabs achieve excellent acoustic insulation, but special additional layers are often needed to meet the acoustic standards required in residential buildings. Details of these layers are explained earlier (in the Section on composite beams and composite slabs with steel decking).

Suggested design strategy

For the most economic construction:

- Use beam arrangements involving a central spine beam (where possible) within a depth range of about 250 to 350 mm
- Where precast units are used, choose the span of the units in the range 6-7.5 m but ensure that the depth of the slab and beam are compatible [this will normally involve a larger unit span than beam span]
- Where deep composite slabs are used, (ideally) limit the slab span to 6 m (to avoid propping) and ensure 70-90 mm concrete cover to the decking profile. Keep slab span: depth ratio in range 20-23.
- Design edge beams as non-composite downstand beams where the architecture will allow, otherwise use RHS members with a welded plate for greatest efficiency
- Use inverted ‘T’ sections as column tie members

3.2.5 Slimfloor beams with composite slabs or precast units

Slimfloor beams are similar to Integrated beams in that the steel beam section lies within the depth of the floor. They can also be used with precast units or deep composite slabs. Slimfloor beams comprise a rolled HE or UKC section with a plate welded to the underside. The plate extends at least 100 mm on each side of the rolled section to support the floor units or decking, and is normally either 12 mm or 15 mm thick. Section sizes can vary up to 350 mm deep, but for most residential applications they would be in the 200 to 300 mm range. A section through a Slimfloor beam with a composite slab and deep decking is shown in Figure 3.9. Composite beams may also

be used with composite slabs, but these are not generally used in Europe and so are not covered in this report and or included in ACE.

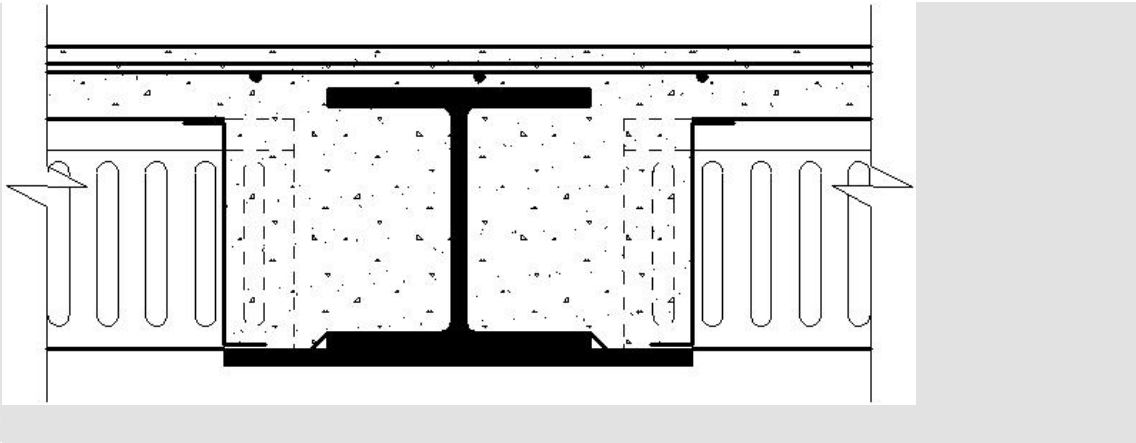

Figure 3.9 Typical Slimfloor beam slab supporting a composite slab with deep decking

All of the issues relating to pc units and deep composite slabs, fire resistance and acoustics covered in the section on Integrated beams apply to Slimfloor beams.

Suggested design strategy

For the most economic construction:

- Use beam arrangements involving a central spine beam (where possible) within a depth range of about 200 to 350 mm
- Design edge beams as non-composite downstand beams where the architecture will allow, otherwise use RHS members with a welded plate for greatest efficiency
- Use inverted 'T' sections as column tie members

3.3 Acoustics

In order to provide adequate acoustic performance of the floors for residential construction, additional floor coverings are required. Two types of system are commonly used; layered or battened. A typical layered system would comprise a 40-65 mm thick screed on a proprietary resilient layer, e.g., 6 mm thick rubber. A typical battened system comprises wooden battens 45–75 mm deep laid at about 450 mm spacing on the slab with a chipboard floor covering on top, as shown in Figure 3.10. The battens have a foam layer stuck to their underside, which provides the resilience necessary to insulate against impact sounds, mostly from walking. The complete floor, including the ceiling, needs to be considered when designing for acoustic performance.

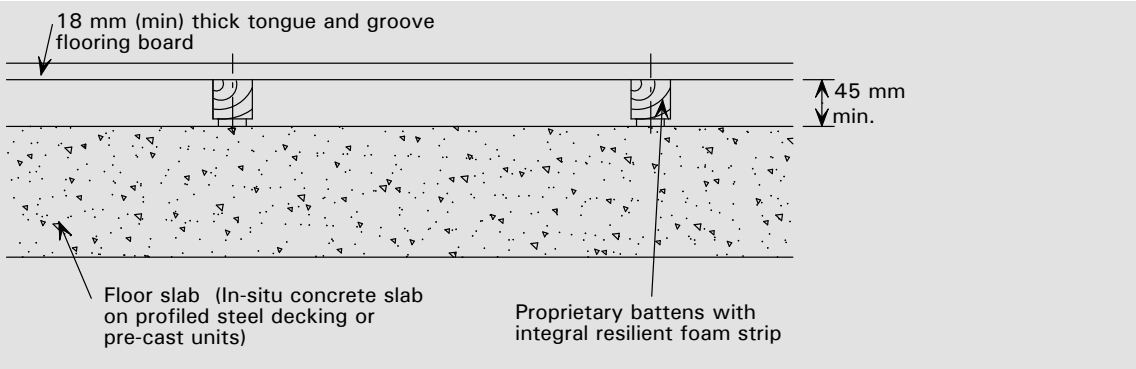

Figure 3.10 Typical battened floor system on a composite slab

3.4 Roof

Various roof options can be considered when using steel construction for residential buildings. These are:

- Steel purlins spanning between structural frames or cross walls.
- 'Open roof' system designed to create habitable space.
- Prefabricated steel roof cassettes.
- Proprietary composite panels (for spans up to 6 m).

Steel roofs can be manufactured to a wide range of shapes including curved and hipped forms. Metallic cladding is suitable for shallow roofs and curved shapes.

The two main considerations are; the span direction of the roof and the level of thermal insulation. Roofs can span either:

- From façade to façade, with spans of 8 to 12 m, or;
- Between cross-walls with spans of 5 to 8 m.

In the first case, a traditional roof truss is preferred, but in the second case, purlins or other systems permit for use of the roof space. An 'open' steel roof system, which provides habitable space, is shown in Figure 3.11.

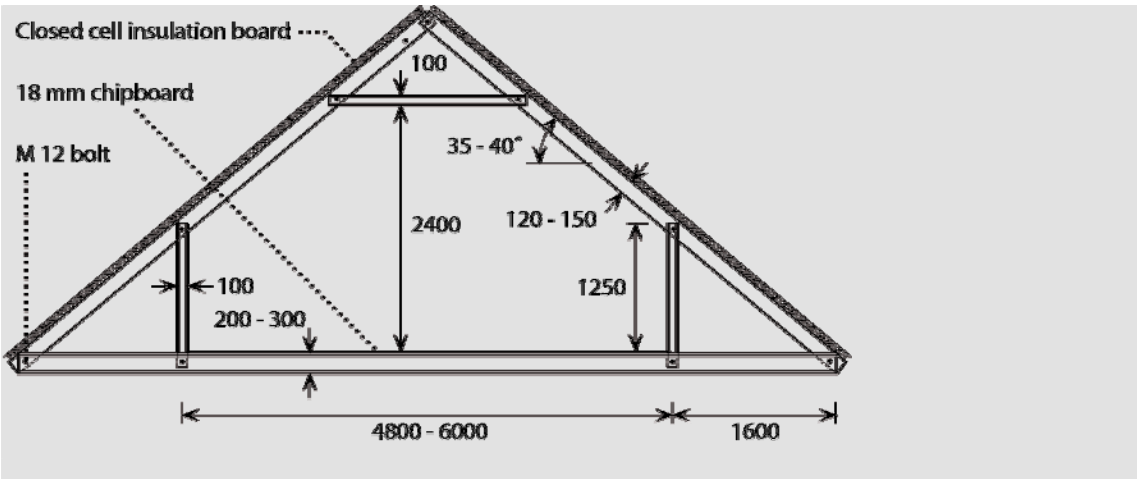

Figure 3.11 Typical 'open' steel roof system using cold-formed sections

The required level of thermal insulation is usually high for roofs (U-values < 0.15 W/m^{2}K), and so the total thickness of thermal insulation can be as much as 150 mm. The majority of the insulation is placed externally to the steel roof, i.e., trusses or purlins, but up to 30% of the insulation can be placed between the steel members without risk of condensation.

Proprietary composite panels can be manufactured with an attractive cladding, such as tiles. Photovoltaic panels or thermal collectors can be easily attached to steel cladding and its sub-structure.

3.5 Fire safety

Fire safety in residential buildings covers a range of factors such as; effective means of escape in fire, prevention of fire spread, structural stability, and the provision of effective fire fighting measures. Requirements for structural stability and compartmentation are usually expressed as the 'fire resistance' of the structural elements.

Fire resistance is based for calibration purposes on the results of standard fire tests and is expressed in units of 30 minutes. For most housing and residential buildings, a minimum fire resistance of 30 minutes is required, increasing to 60 minutes for separating walls, dependant on national regulations.

Taller buildings may require 90 minutes fire resistance primarily for reasons of structural stability and effective fire fighting. Generally, for walls and floors, the measures introduced to achieve satisfactory acoustic insulation also achieve at least 60 minutes fire resistance.

The fire protection of beams may be board, spray or intumescent coating, and guidance is given in the sections describing the particular floor system. Fire protection for columns is normally board because of aesthetics, with thicknesses of (typically):

15 mm thick for up to 60 minutes
25 mm thick for 90 minutes

4 STEEL FRAMED MULTI-STOREY COMMERCIAL BUILDINGS

4.1 Framing options

The framing options for multi-storey commercial buildings are similar to those for multi-storey residential buildings in terms of bracing and stability, as outlined in Section 3.1. However, they differ because the grid sizes, loading and floor-to-floor heights are larger with commercial buildings, apart from the differences in spatial requirements and layouts. Most commercial buildings require floor spans in excess of 12 m, and there is a trend towards 15-18 m column-free spans. The floor zones in commercial buildings have to accommodate a range of services, and with long spanning floor systems and relatively deep beams, it is important to consider the integration of the services in the floor zone at the conceptual design stage. Floor-to-floor heights are normally around 4.2 m. The characteristic imposed loads for commercial buildings are typically 3-5 kN/m^2. The structural principles concerned with the design of the frames, bracing and connections, as set out in Section 3.1, also apply for commercial buildings.

4.1.1 Columns

The columns and other vertical load-bearing elements of the structure are generally designed to have the minimum impact on the useable space of the building and therefore are of the minimum size possible. The size of the columns clearly depends on the height of the building and the floor area supported, but simplified guidance on section sizes is provided for H section columns, which are most commonly used.

H sections are usually orientated so that the larger (primary) beams frame into the column flange. This makes connection detailing considerably easier. H sections are the simplest solution for columns. The same column serial size is normally chosen at all floor levels, although the weight of the section can be varied. This approach simplifies column splices. For economy and convenience of erection, columns are placed in lengths equivalent to 2 or 3 times the floor height. Two design tables for HE and UC columns are presented in Table 4.1 and Table 4.2 for concept design. An imposed load of 4 kN/m^2 is used together with a total permanent load (including self weight) of 4 kN/m^2. The floor-floor height is taken as 4 m.

Table 4.1 Typical sizes of HE columns in braced frames (sizes shown are for lowest length of column, with reduction in mass for higher lengths)

Number of Storeys	Column Grid			
	6 × 6 m	6 × 9 m	6 × 12 m	6 × 15 m
4	HE 220 B	HE 280 B	HE 240 M	HE 260 M
6	HE 280 B	HE 240 M	HE 260 B	HE 300 M
8	HE 300 B	HE 260 M	HE 300 M	HE 320 M
10	HE 240 M	HE 300 M	HE 320 M	HD 400 x 347

All in S355 steel Imposed load = 3 kN/m^2 plus 1 kN/m^2 for partitions

Table 4.2 Typical sizes of UC columns in braced frames. (Sizes shown are for lowest length of column, with reduction in mass for higher lengths)

Number of Storeys	Column Grid			
	6 × 6 m	6 × 9 m	6 × 12 m	6 × 15 m
4	203 UC 86 S275	254 UC 132 S275	254 UC 167 S275	305 UC 198 S275
6	254 UC 132 S275	254 UC 167 S275	305 UC 198 S275	305 UC 240 S355
8	305 UC 240 S275	305 UC 198 S275	305 UC 240 S355	356 UC 235 S355
10	305 UC 198 S275	305 UC 240 S355	356 UC 340 S355	356 UC 340 S355

Steel grade as shown Imposed load = 3 kN/m^2 plus 1 kN/m^2 for partitions

4.2 Floor construction and loading

This Section gives details of the floor loading, services integration and describes various floor systems often used in multi-storey commercial buildings. The main characteristics of each floor system are described, with guidance on important design issues. These systems are similar to those used in residential buildings, but the spans tend to be longer in commercial buildings and special acoustic floor coverings are not normally necessary.

4.2.1 Floor loading

Loading on structures is covered in EN 1991 Eurocode 1 Actions on structures. Recommended values for imposed loads are given in Part 1-1, and for fire loads in Part 1-2. Actions during construction can be found in Part 1-6. As well as the self weight of the floors and frame, an additional load of 0.7 kN/m^2 should be considered for raised floors, ceilings and building services equipment. Table 4.3 presents typical self-weights of building elements in multi-storey buildings.

Table 4.3 Typical self-weights of building elements

Element	Typical Weight
Precast units (spanning 6 m, designed for a 5 kN/m2 imposed load)	3 to 4.5 kN/m2
Composite slab (Normal weight concrete, 130 mm thick)	2.6 to 3.2 kN/m2
Composite slab (Light weight aggregate concrete, 130 mm thick)	2.1 to 2.5 kN/m2
Services	0.25 kN/m2
Ceilings	0.1 kN/m2

Imposed loading varies according to the use of any specific floor area being considered - different values are applied for a plant room or storage area, for example. EN 1991-1-1 presents minimum imposed floor loads for different building uses. For offices, the design imposed loading is typically 3 kN/m^2. In addition, up to 1 kN/m^2 may be added for movable partitions. For storage areas, a higher value of 5 kN/m^2 may be used.

4.2.2 Service integration

Most commercial buildings require some form of mechanical ventilation and air conditioning. The provision of this is of critical importance, as it affects the layout and type of members chosen in the structure. The basic choice is either to integrate the services within the structural depth of the beam or to place them beneath it. Generally, a zone of 450 mm permits services to be placed below the beams. An additional 15-

200 mm is usually allowed for fire protection, ceiling and lighting and 25-50 mm deflection.

Various forms of structure-service integration are illustrated in Figure 4.1, where the structural zone is dimensioned ‘1’ and the service zone ‘2’. The forms comprise full separation of the zones for services and the structure (Figure 4.1(a), partial separation, where some services pass through openings in the web of the beams Figure 4.1(b), and full service integration, where the services are entirely contained within the structural zone Figure 4.1(c).

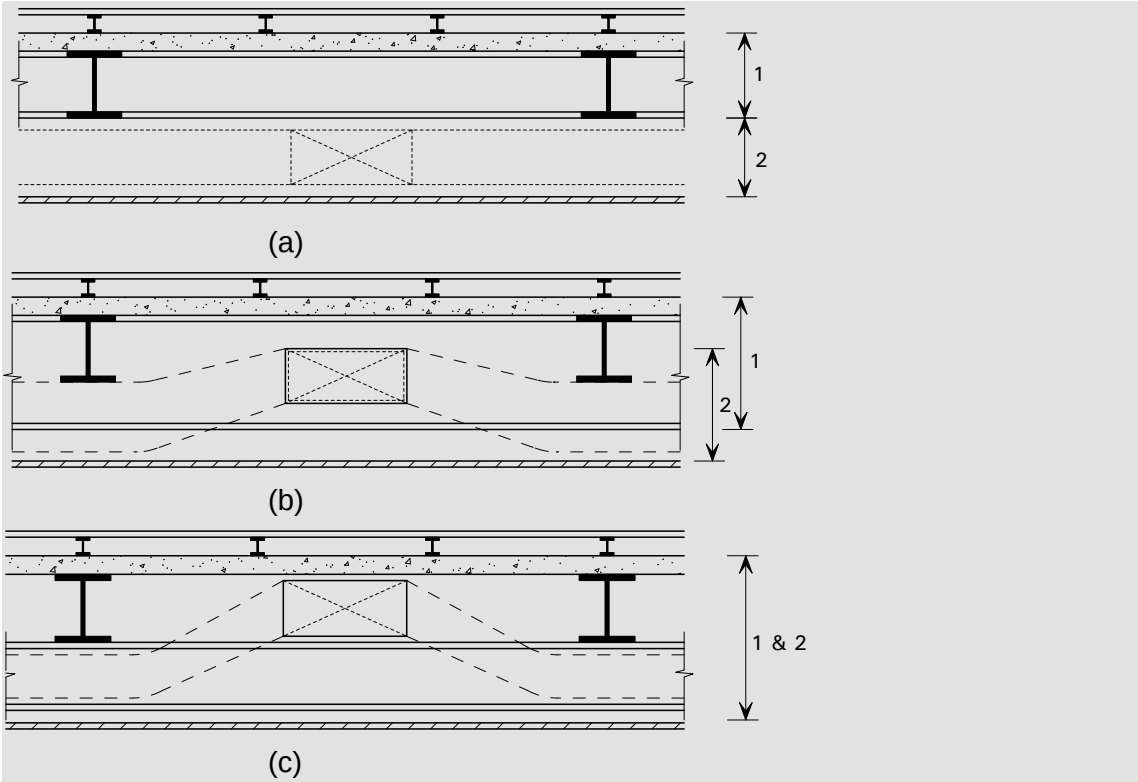

Key
1. Structural zone
2. Services zone

Figure 4.1 Options for service-structure integration

4.2.3 Short span composite beams without web openings and composite slabs

Composite beams and slabs with steel decking and in-situ concrete are widely used in steel framed commercial buildings. Short span composite beams, up to 7.5 m span, can provide relatively shallow floor zones without the need to pass services through openings in the beam web.

Composite slabs with deck profiles between 50 to 80 mm deep suitable for residential buildings are also applicable for commercial buildings, and the details and span capability are presented in Section 3.2.2. However, the acoustic requirements are not so severe with commercial buildings, so the special floor treatments needed for residential buildings may be omitted. The span capability of the decking and composite slab may also be checked using Table 3.2 and Table 3.3. Slab spans of 3 to 4 m are most common, leading to typical slab depths of 130 to 150 mm. Secondary beams should be spaced closely enough to avoid propping the decking, as propping can be expensive and disruptive on site. Edge beams can be designed as non-composite,

although shear connectors may be required to transfer wind loads to the floor, and to enable it to act like a large diaphragm.

Mesh reinforcement is placed in the slab to enhance its fire resistance, to act as transverse reinforcement and to minimise cracking. The mesh size depends on the fire resistance requirement and whether or not the slab is propped. Lightweight concrete is often used for composite construction in the UK, but it is not available everywhere in Europe.

For primary and secondary beams in the range 6-7.5 m span, typical beam depths would be 300-350 mm, with an overall floor zone of 800 mm for light servicing, and about 1200 mm with a 400 mm air conditioning duct below the beam - see Figure 4.2.

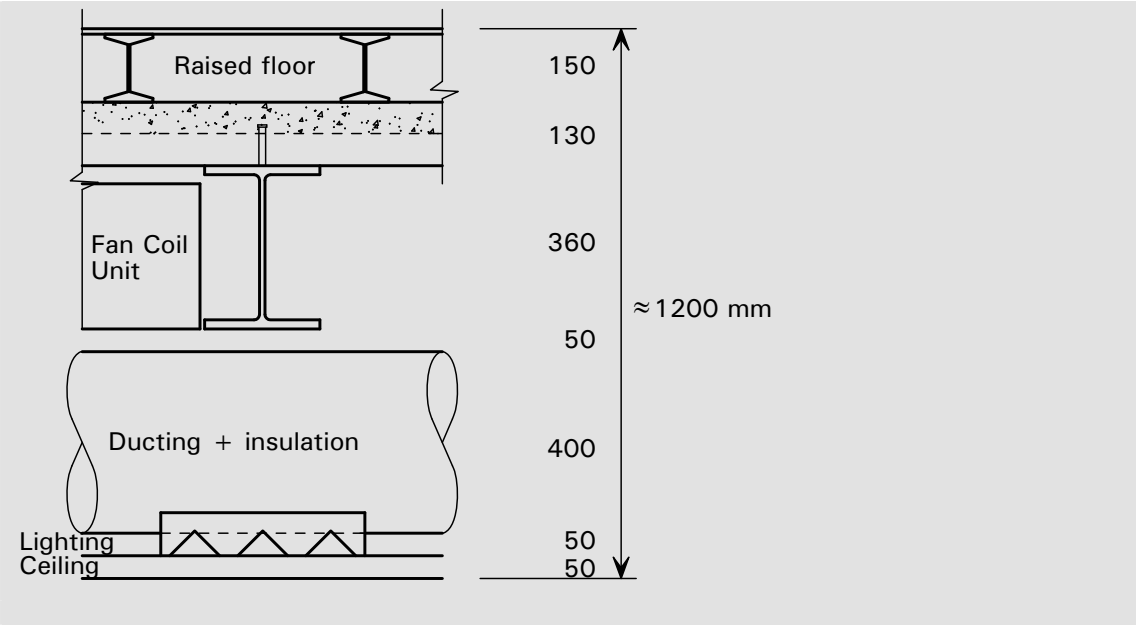

Figure 4.2 Overall floor zone – typical short-span composite construction

A typical beam grid arrangement for a commercial building is shown in Figure 4.3.

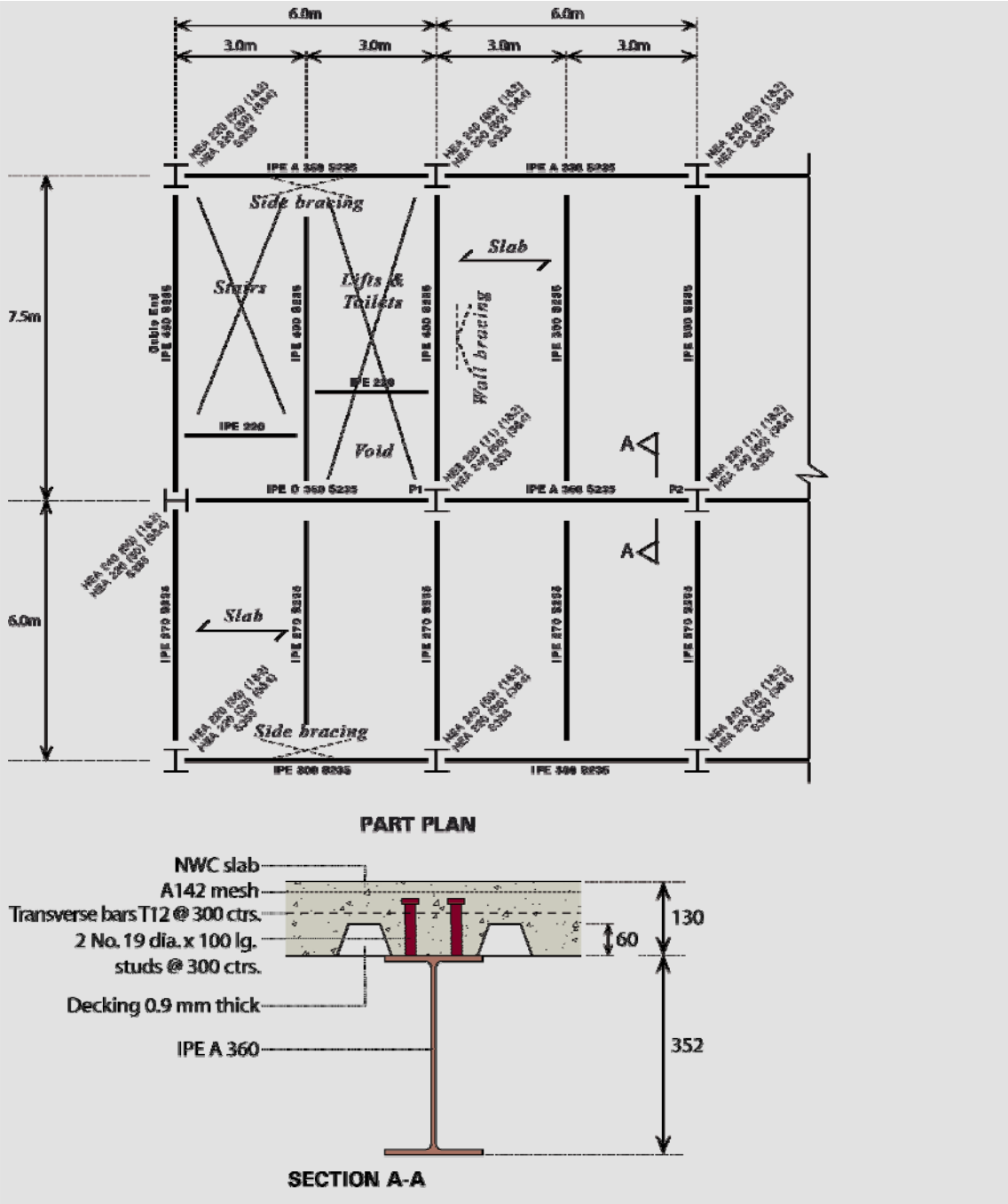

Figure 4.3 Short-span composite beam – example of floor steelwork arrangement for 4-storey rectangular plan building

Fire protection for beams is (typically):

Intumescent coating: 1.5 mm thick for up to 90 minutes fire resistance
Board: 15 - 25 mm thick for up to 90 minutes

Suggested design strategy

For the most economic construction,

- Assume a 130-150 mm concrete slab depth
- Assume S275 secondary beams of 6-15 m span at about 3 m spacing, and S355 primary beams of a span 2 to 3 times the secondary beam spacing

- Choose the decking depth and thickness, and reinforcement to meet the loading requirements and fire resistance for the span (without needing propping) – using manufacturer's design tables or software
- Assume secondary beam depth equals span/24, and primary beam depth equals span/18
- Assume shear connectors at 300 mm spacing for secondary beams and 150 mm for primary beams

4.2.4 Long span composite beams with web openings and composite slabs

Long span composite beams offer an efficient floor solution with large column-free areas. Services may pass through openings in the web because of the depth of the sections, which minimise the depth of the floor zone. The construction consists of composite beams using rolled steel or fabricated sections supporting a composite slab. Grids are either arranged with long span secondary beams spanning 9 to 15 m (typically) at 3 m to 4 m spacing supporting the slab, supported by short span primary beams of 6 to 7.5 m, or with short span secondary beams (6-9 m span) supported by long span primary beams. Composite slabs are as for short span composite beams, and, as before, secondary beams should be spaced closely enough to avoid propping the decking.

Web openings can be circular, elongated or rectangular in shape, and can be up to 80% of the beam depth. Openings should be located in areas of low shear, and web stiffeners may be required around large openings. They can have a length/depth ratio typically of up to 3.5.

Typical overall floor zones are 1000 mm for 13.5 m span (with 350 mm deep openings) and 1100 mm for 15 m span (with 400 mm deep openings).

Fire protection can be boards or intumescent coatings. Intumescent coatings can be applied off-site as a single coating up to 1.8 mm thick to achieve 90 minutes fire resistance

An example of a building grid using long span secondary beams with web openings is shown in Figure 4.4.

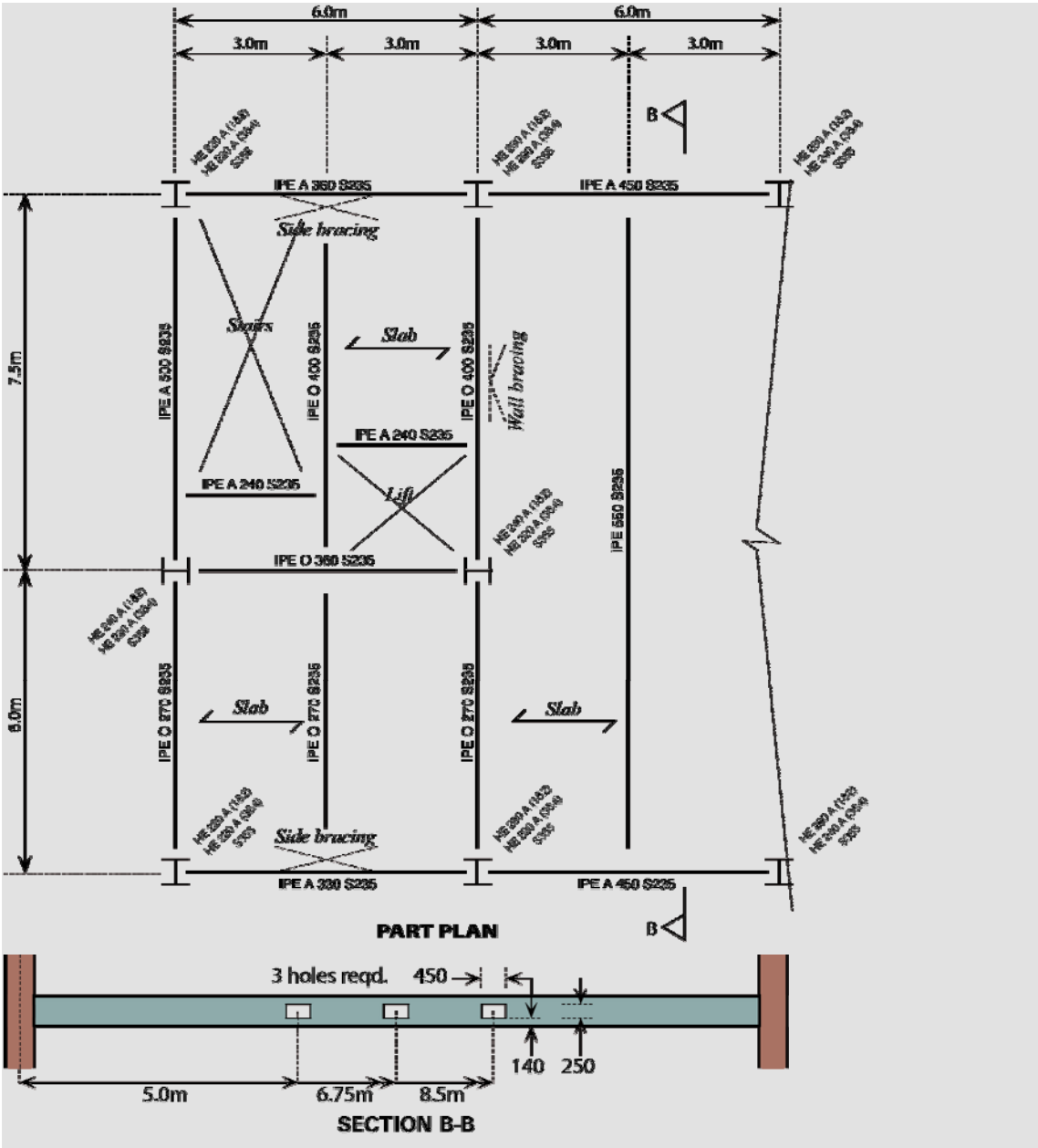

Figure 4.4 Long span composite beams (with web openings)

Suggested design strategy

For the most economic construction,

- Assume a 130-150 mm concrete slab depth
- Assume S275 secondary beams of 9-15 m span at about 3-4 m spacing, and S355 primary beams of 6-9 m span
- Choose the decking depth and thickness, and reinforcement to meet the loading requirements and fire resistance for the span (without needing propping) – using manufacturer's design tables or software
- Assume secondary beam depth equals span/22, and primary beam depth equals span/18
- Assume shear connectors at 300 mm spacing for secondary beams and 150 mm for primary beams

4.2.5 Composite cellular beams and composite slabs

Modern cutting technology and fabrication techniques have been used to produce beams with repeated openings of a regular shape throughout their length. Although this has been done in the past to produce castellated beams with hexagonal openings, or 'cells', modern techniques are used to create repeated circular, elongated or rectangular cells. These beams are known as cellular beams and they have become very popular in long-span construction because of their efficient creation of regular openings for circular ducting, and they are also chosen because of their aesthetic appeal.

Cellular beams may be produced by automatic cutting and re-welding of hot rolled sections, or by direct fabrication from plates. Use of the cutting and re-welding process allows beams to be made from different sizes of top and bottom chords (from different sections) in order to gain maximum efficiency. However, the range of size and spacing of the regular openings for beams made in this way is limited by the cutting and re-welding process. An example of a cellular beam made from two different sections is shown in Figure 4.5.

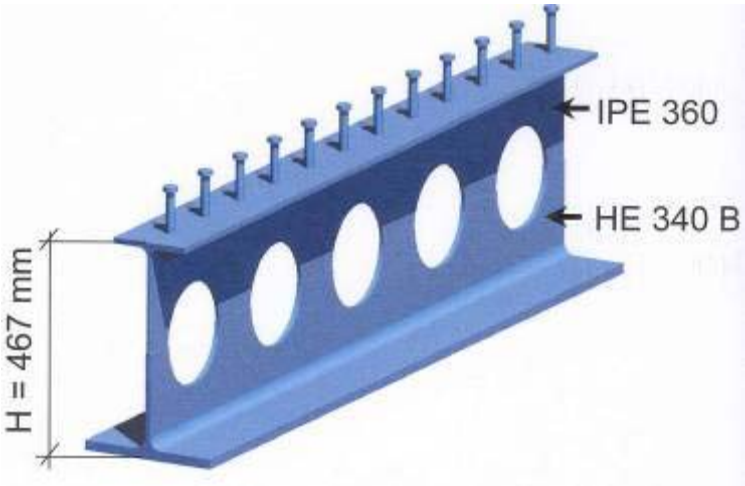

Figure 4.5 Non-symmetrical composite cellular beam

Openings may be filled-in close to the supports, or at the location of point loads, where there are high shear loads. Elongated openings can be provided in the beam in low shear regions. It is also a feature of the cutting and re-welding process that the beams can be pre-cambered at no additional cost. Therefore, the total deflection limit is not necessarily critical, which leads to a lighter beam than is achievable in other long-span schemes.

Regular openings in the web allow ducts to pass through the beams, as shown in Figure 4.6. Larger services equipment is located between the beams. Openings can be between 60 to 80% of the beam depth and opening sizes should allow for any insulation around the services. Elongated openings may require stiffeners. Fabrication should be arranged to ensure web openings align through the beams along the building.

Figure 4.6 Long-span secondary cellular beams with ducts passing through the circular openings

The overall floor zone is normally in the range 1000 to 1200 mm. A typical floor zone can be as low as 1000 mm for 15 m span beams with regular 400 mm openings, which is much shallower than the case where ducts pass below the beams – as shown in Figure 4.7.

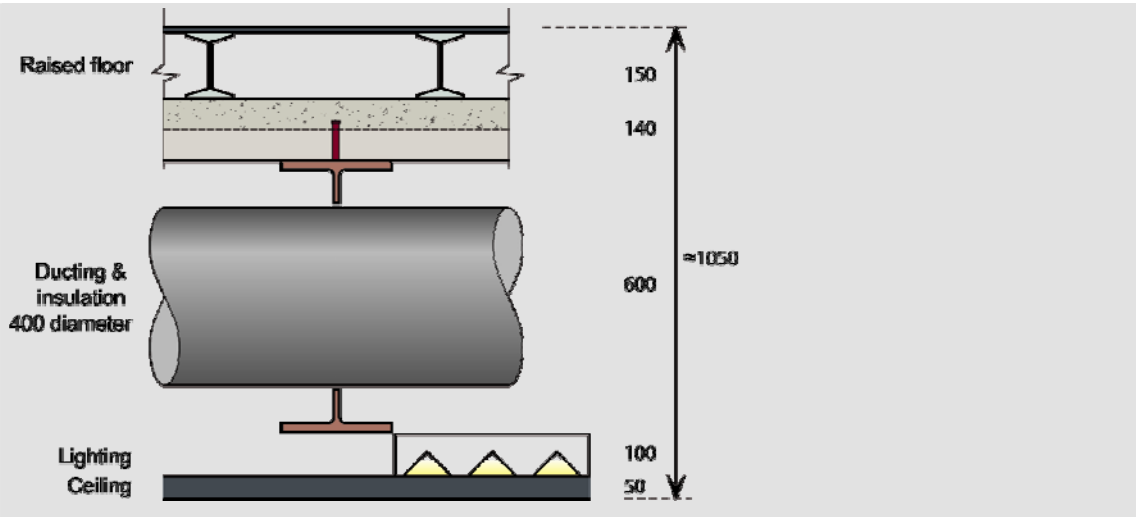

Figure 4.7 Cellular beam – Typical cross-section showing integration

Cellular beams can be arranged as long-span secondary beams, supporting the floor slab directly, or as long-span primary beams supporting other cellular beams or I section secondary beams. Typical span ranges are 10-18 m for cellular beams as secondary beams at 3 to 4 m spacing and 9 m to 12 m as primary breams. Secondary beams need to be spaced sufficiently close to avoid propping of the decking. Typical

overall steel section depths are span/22 for secondary beams, and span/18 for primary beams. S355 is preferred for cellular beams because of the local high stress effects around the openings.

Cellular beams are ideally suited for fire protection by sprayed intumescent coating by either off-site or on-site application. Off-site application of intumescent coatings may cost more, but can offer a saving in construction time and provides a better quality control of the coating thickness. Intumescent coating of 1.5 to 2 mm thickness may be applied on-site. Greater fire protection may be required than that for the equivalent steel profile without openings, as the section factor of the cellular cross-section is higher.

A typical layout of long span construction using cellular beams is shown in Figure 4.8.

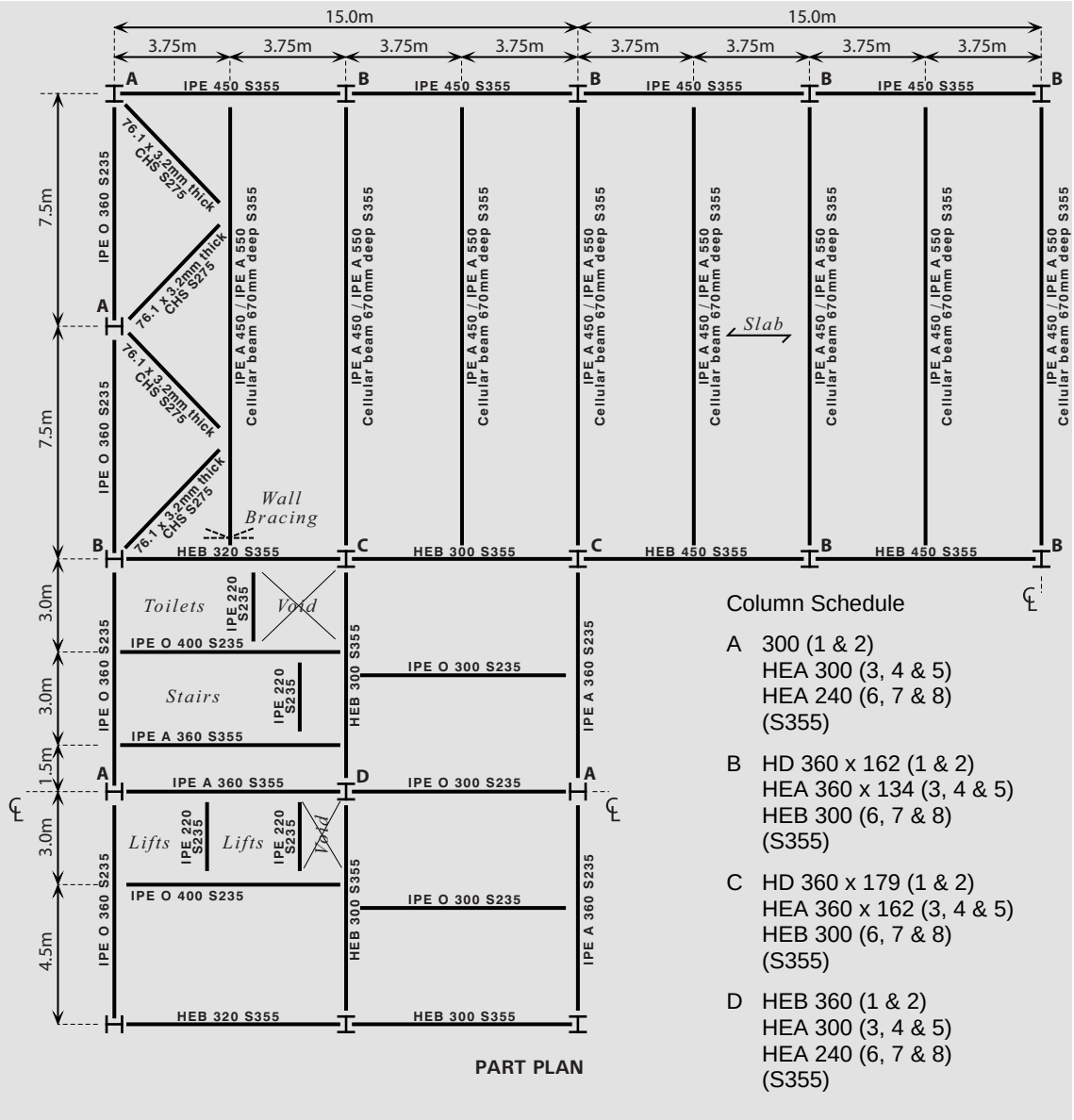

Figure 4.8 Cellular beams (long-span secondary beams) – example of steelwork arrangement at the corner of an 8 storey building with an atrium

Suggested design strategy

For the most economic construction,

- Assume a 130-150 mm concrete slab depth
- Assume S355 secondary beams of 10-18 m span at about 3-4 m spacing, and S355 primary beams of 9-12 m span at 6-9 m beam spacing
- Choose the decking depth and thickness, and reinforcement to meet the loading requirements and fire resistance for the span (without needing propping) – using manufacturer's design tables or software
- Assume secondary beam depth equals span/22, and primary beam depth equals span/18
- Assume shear connectors at 300 mm spacing for secondary beams and 150 mm for primary beams

4.2.6 Non-composite downstand beams with precast units

The system of non-composite beams and precast units used for residential buildings (described in Section 3.2.3) also applies to commercial buildings, but spans tend to be much longer in commercial buildings. Precast units may be supported on the top flange of the steel beams or on 'shelf' angles. Shelf angles are bolted or welded to the beam web, with an outstand leg long enough to provide adequate bearing of the precast unit and to aid their positioning, as shown in Figure 4.9. Shelf angles used to reduce the overall floor depth, but there are certain clearances that are necessary when using them to enable the units to be erected, as shown in Figure 4.10. The length of the units should be specified so that 25 mm clearance is achieved when lowering into position. The minimum recommended width of the top flange is 180 mm, to allow for safe bearing of the units and a tolerance gap, which can be grouted up. The typical span capability of hollow core units is shown in Table 4.4. For a typical grid, the overall floor zone is approximately 800 mm, including a suspended ceiling.

The beam sizes will be stockier than composite beams, and a typical span: depth ratio is 15. The minimum size for adequate bearing is an IPE 400. As with composite beams, there will be severe torsion in the construction stage, and so temporary bracing may be necessary to prevent lateral torsional buckling. Connections should have full depth end plates.

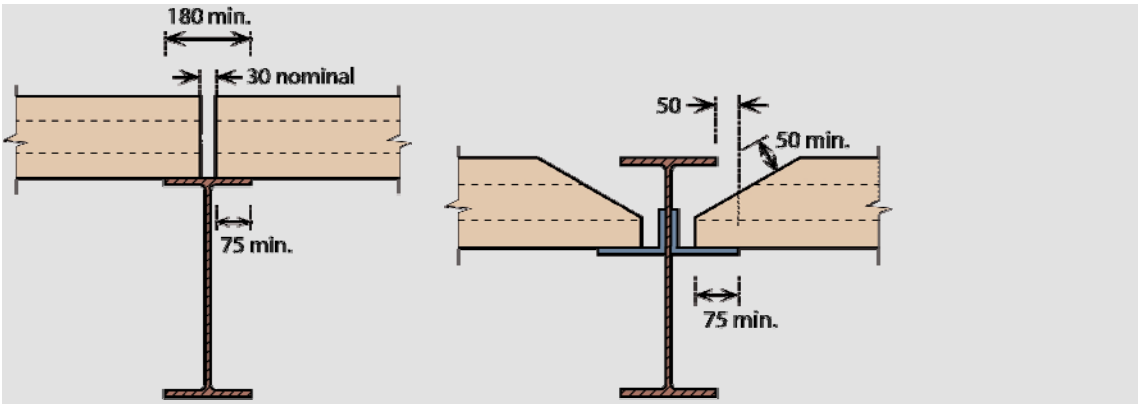

(a) Units sitting on downstand beam (b) Units sitting on shelf angle beam

Figure 4.9 Floor construction with precast concrete units in non-composite construction

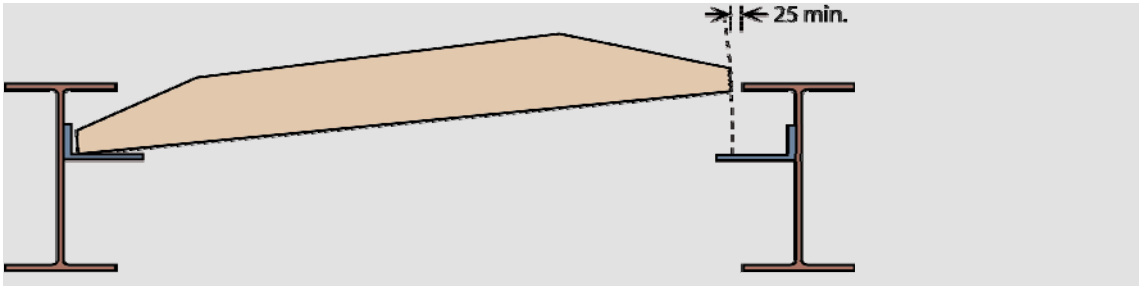

Figure 4.10 Bearing and clearance requirements for precast units on shelf angle beams

Typical hollowcore precast unit capacities are given in Table 4.4.

Table 4.4 Typical spans of hollowcore units

Hollowcore unit depth (mm)	Span (m)	Imposed load (kN/m^2)
150	6	3.5
200	7.5	3.5
250	9	5.0

Suggested design strategy

For the most economic construction:

- Choose a 6, 7.5 m span grid
- Choose precast units using manufacturer's data for the correct fire resistance; normally 150 and 200 mm deep for 6 m and 7.5 m units respectively
- Consider shelf angles if floor zone is critical
- Design beams based on span: depth ratio of 15, and a minimum flange width of 180 mm (min IPE 400)
- Check beam torsional loading condition during erection of precast units, or allow for temporary bracing.

4.2.7 Integrated beams or slim floors with composite slabs or precast units

Integrated floor beams are equally suitable for commercial buildings as for residential buildings. These are shallow floor systems comprising asymmetric beams supporting precast concrete elements, such as hollowcore units, or composite slabs with decking. Beams are normally fabricated either by using a T stub, cut by splitting an IPE or HE section into two equal T stubs, and by welding a plate to the web (IFB), or by adding an additional 'flange' plate to the underside of a rolled section (SFB), as shown in Figure 4.11.

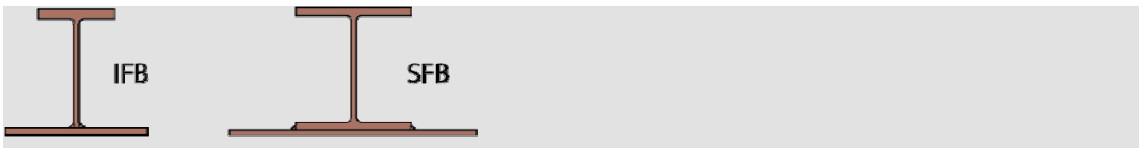

Figure 4.11 Typical integrated floor beams

The system options are explained in detail in Section 3.2.4 on integrated beams for residential applications, and the advice can be applied for commercial buildings - except that acoustic layers above the structural floors are not normally required.

Suggested design strategy

For the most economic construction:

- Use beam arrangements involving a central spine beam (where possible) within a depth range of about 250 to 350 mm
- Where precast units are used, choose the span of the units in the range 6-7.5 m but ensure that the depth of the slab and beam are compatible [this will normally involve a larger unit span than beam span]. Concrete topping is recommended for good dynamic performance.
- Where deep composite slabs are used, (ideally) limit the slab span to 6 m (to avoid propping) and ensure 70-90 mm concrete cover to the decking profile. Keep the slab span: depth ratio in the range 20-23.
- Design edge beams as non-composite downstand beams where the architecture will allow, otherwise use RHS members with a welded plate for greatest efficiency to resist torsion at the construction stage
- Use inverted 'T' sections as column tie members

4.3 Roof

Roof types for commercial buildings vary considerably. Flat roofs are common, and allow access, and steel framed floors and composite slabs are suitable in this case. Light weight structures are normally used to house plant and lift machinery, with heavier floor beams designed for these areas to support the equipment. Steel framed pitched and Mansard types (see Figure 5.7(g)) are also popular, and there are also many bespoke designs used to create an architectural impact.

4.4 Fire safety

Fire safety and protection measures are normally more stringent for commercial buildings than residential buildings because the fire periods are longer (60 to 120 minutes).

Designers should consider fire safety when arranging or choosing the structural configuration and should address issues such as:

- Means of escape.
- Size of compartment.
- Access & facilities for the Fire Services.
- Limiting the spread of fire.
- Smoke control and evacuation.
- Adoption of sprinklers to prevent fire and control fire severity.
- Passive fire protection strategy

The structural performance in the event of a fire should meet prescribed standards, usually expressed as a period of fire resistance of the structural components. As an alternative, a 'fire engineering' approach may be followed, which assesses the fire

safety of the whole building, considering a natural fire development, the building use and active measures introduced to reduce the risk of a severe fire.

In general, the structural engineer should consider:

- Opportunities to use unprotected steel by ‘fire engineering’ analysis, considering the natural fire development and severity.
- Systems such as partially encased columns and integrated beams, which do not require additional fire protection.
- Influence of service integration on choice of the fire protection system, and off-site solutions, such as use of intumescent coatings.
- Influence of site-applied fire protection on the construction programme.
- Appearance of exposed steelwork when choosing a fire protection system.

Schemes with fewer but heavier beams can result in overall savings in fire protection.

5 STEEL FRAMED INDUSTRIAL BUILDINGS

5.1 Concept Design and Forms of Industrial Building

The development of a design solution for a single storey building, such as a large enclosure or industrial facility is more dependent on the activity being performed and future requirements for the space than other building types, such as commercial and residential buildings. Although these building types are primarily functional, they are commonly designed with strong architectural involvement dictated by planning requirements and client 'branding'. Prior to the detailed design of an industrial building it is essential to consider many aspects such as:

- Space optimization.
- Speed of construction.
- Access and security.
- Flexibility of use.
- Standardization of components.
- Infrastructure of supply.
- Service integration.
- Landscaping.
- Aesthetics and visual impact.
- Acoustic insulation.
- Weather-tightness.
- Fire safety.
- Design life.
- Sustainability considerations.
- End of life and re-use.

The importance of each of these considerations depends on the type of building. For example, the requirements concerning a distribution centre will be different from those of a manufacturing unit.

In densely populated areas, the form of the structure may be influenced by the parking requirements, and the particular need to include the parking areas within the building structure. Alternative concepts for parking solutions are presented in Figure 5.1, where the convenient solution of external parking is shown in (a), and other solutions contained within the building plan are shown in (b), (c) and (d).

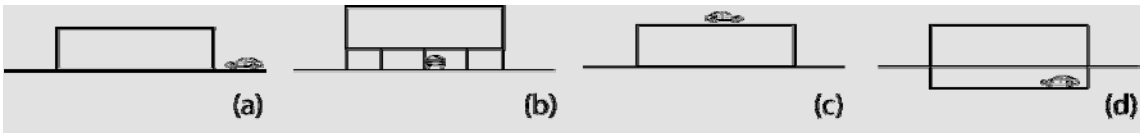

Figure 5.1 Design options for parking

Increasingly, larger industrial buildings are designed for mixed use, i.e., in most cases integrated office space and / or staff rooms for the employees are provided. There are

different possible locations for these additional spaces and uses, and examples are shown in Figure 5.2 of:

a) creating a separate space inside the building and possibly two storeys high, separated by internal walls

b) providing an external building, directly connected to the hall itself

c) partly occupying the upper floor of a two-storey industrial building.

This leads to special concept design requirements concerning the support structure and the building physics performance. If the office area is situated on the upper storey of the industrial building, it may be designed as a separate structure enclosed by the structure of the building. In this case, floor systems from commercial buildings can be used, often based on composite structures, e.g., integrated floor beams. Another possible solution is to attach the office to the main structure. This requires particular attention to be paid to the stabilisation of the combined parts of the building.

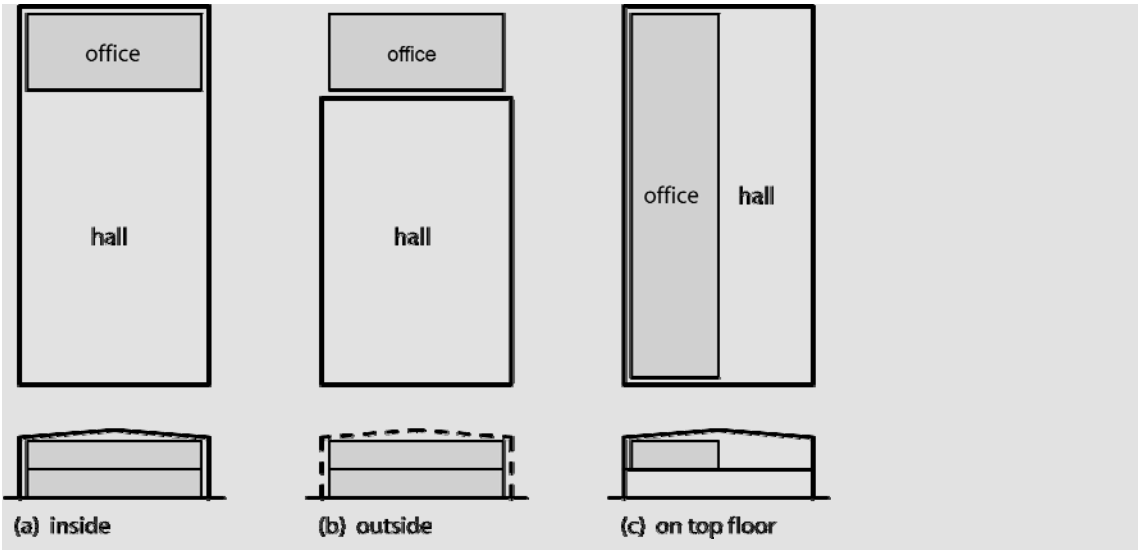

Figure 5.2 Options for incorporating an office into an industrial building complex

There is much scope for the design engineer in the form of construction and appearance of an industrial building to realise the architectural ideas and the functional requirements. Generally, an industrial building has a large rectangular single hall, which is extendable in its long direction. Industrial buildings are generally designed as enclosures that provide functional space for internal activities, which may involve use of overhead cranes or suspended equipment, as well as the provision of office space or mezzanine floors.

The most elementary system used for an industrial building consists of two columns and a beam. This configuration can be modified in numerous ways using various types of connections between the beams and columns and for the column base. The types of structures most commonly used in industrial buildings are portal frames with hinged column bases, and ‘column and beam structures’ with either fixed or hinged column bases. Portal frames provide sufficient in-plane stability, and so only require bracings for out-of-plane stability. Column and beam structures have pinned connections, and so require bracing in-plane and out-of-plane.

Figure 5.3 shows a variety of rigid framed structures with fixed (a) or hinged (b) column bases. Fixed column bases may be considered when heavy cranes are used, as they deflect less under horizontal forces. Hinged column bases have smaller foundations

and simple base connections. In examples (c) and (d), the structure is located partly outside the building, and so details concerning the piercing of the building envelope have to be designed carefully. The complex detail in these types of structure may also be used for architectural purposes.

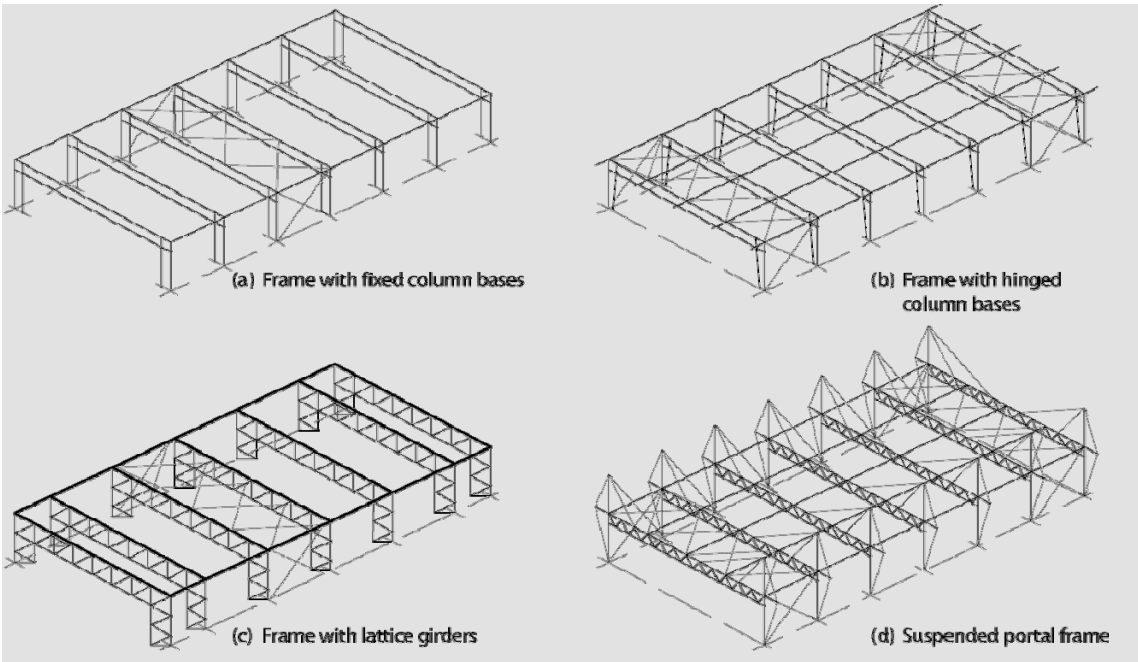

Figure 5.3 Examples of rigid framed structures

In Figure 5.4, different structures consisting of beam and columns are presented. Figure 5.4(a) shows an example of a structure without purlins that is stiffened by diaphragm action in the roof and bracings in the walls. In Figure 5.4(b), purlins are used, which leads to a simple design of the roof cladding with reduced spans. The roof is stiffened by plan bracing, and so the cladding only has to support vertical loads. A structure without purlins may offer a more pleasant appearance when viewed from the inside. Figure 5.4(c) and Figure 5.4(d) show lattice trusses and cable suspended beams, which may be beneficial to achieve larger spans, as well as desirable for visual reasons.

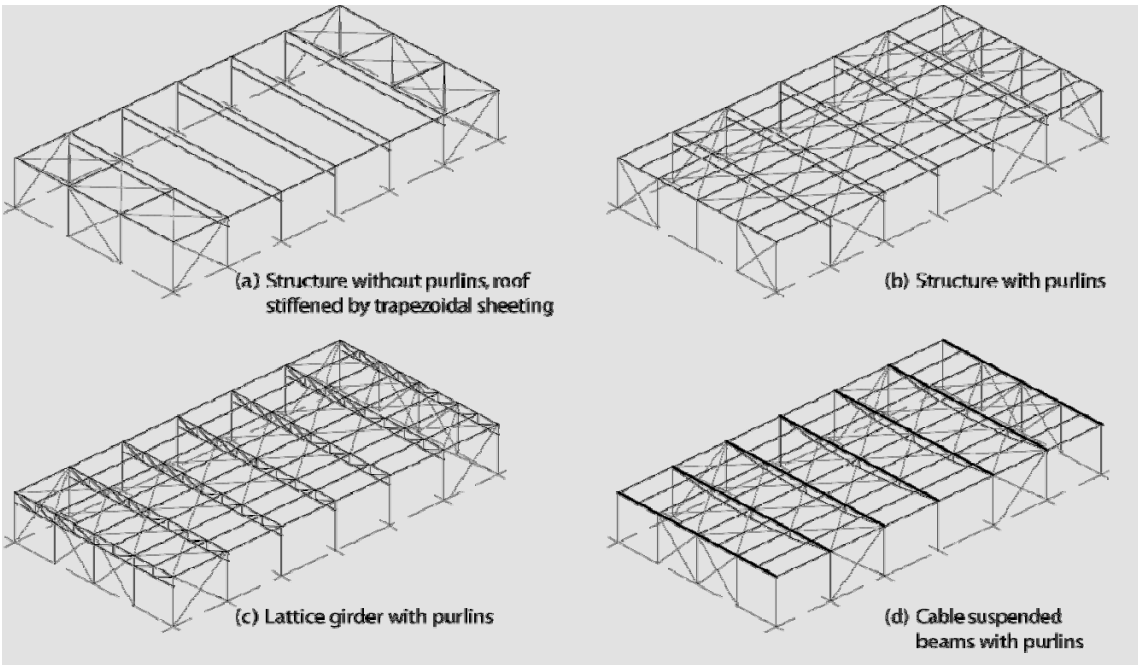

Figure 5.4 Examples of column and beam structures

Arch structures offer advantageous load-carrying behaviour as well as having a pleasant visual appearance. In Figure 5.5(a), a building with a three-hinged arch is shown. Alternatively, the structure can be elevated on columns, as in Figure 5.5(b), or constructed as a space frame (c), or integrated in a truss structure, as in (d).

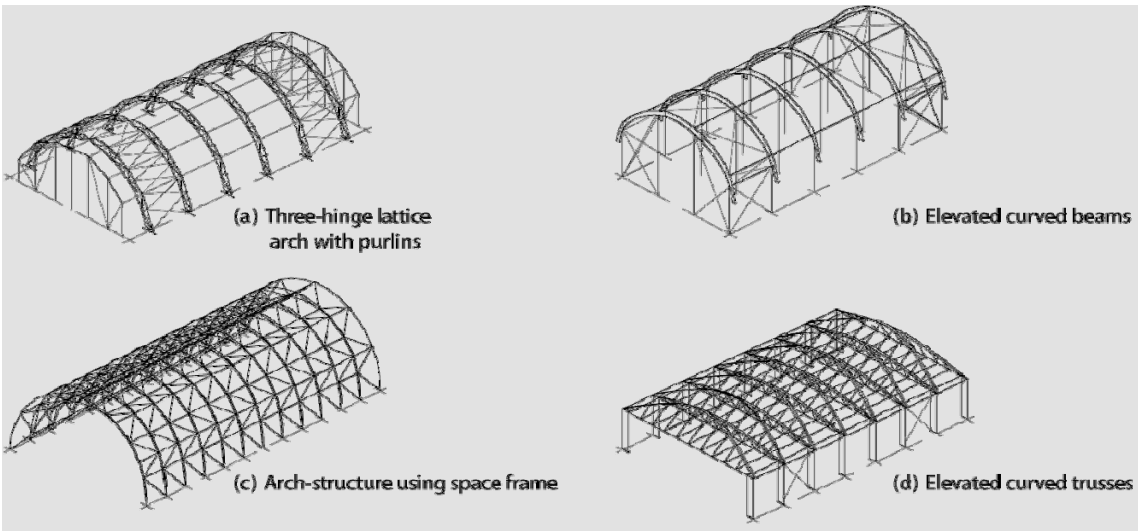

Figure 5.5 Examples of curved or arched structures

The forms of buildings with primary and secondary structural elements described above are all directional structures, for which the loads are carried primarily on individual directional load paths. Spatial structures and space trusses are non-directional structures; they can be expanded, but would become heavy for long spans. Figure 5.6 shows some examples of spatial structures.

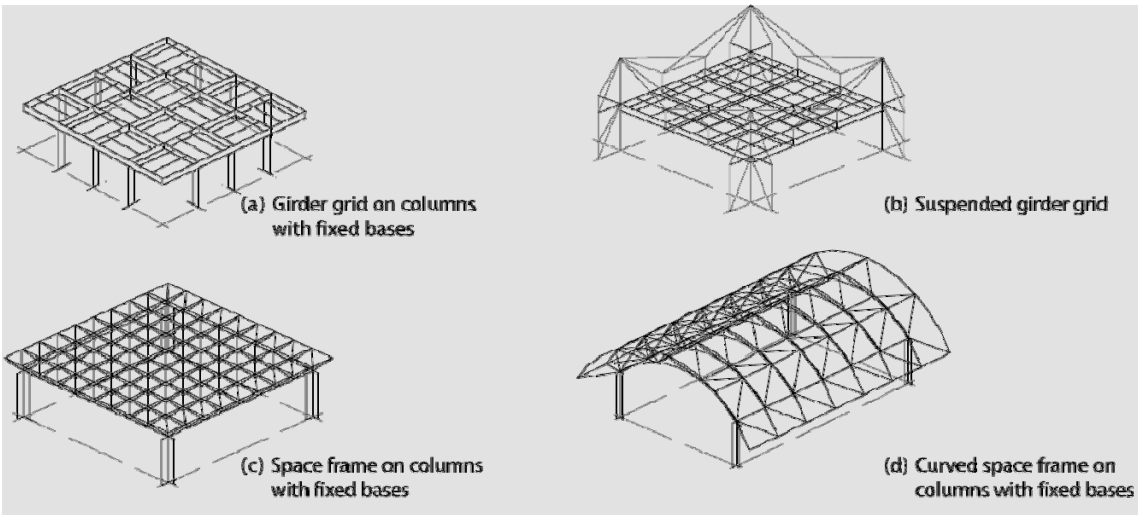

Figure 5.6 Examples of spatial structures

5.2 Pitched and curved roof portal frames

5.2.1 General forms of portal frame

Steel portal frames are widely used in most of the European countries because they combine structural efficiency with functional application. Various configurations of portal frames can be designed using the same structural concept, as shown in Figure 5.7. Multi-bay frames can also be designed, as in Figure 5.7(e) and (f), either using single or pairs of internal columns.

Portal frames may be tied across at the eaves, to restrict the outward spread of the frame, but the tie will reduce the clear height within the building. The moments in the columns are reduced, but for roof slopes of less than 15° large forces will develop in the rafters and the tie.

Curved rafter portals (see Figure 5.7(b)) are often used for architectural applications. The rafter can be curved to a radius by cold bending. For spans greater than 16 m, splices may be required in the rafter because of limitations of transport. For architectural reasons, these splices may be designed to be visually unobtrusive. Alternatively, where the roof must be curved but the frame need not be curved, the rafter can be fabricated as a series of straight elements. Cellular beams are commonly used in portal frames which have curved rafters, but where splices are required in the rafter for transport, these should be detailed to preserve the architectural features of this form of construction.

Office accommodation is often provided within a portal frame structure using a mezzanine floor (see Figure 5.7(c)), which may be partial or full width. It can be designed to stabilise the frame. Often the internal floor requires additional fire protection. Offices may be located externally to the portal frame, creating an additional part frame (see Figure 5.7(f)). The main advantage of this framework is that large columns and haunches do not obstruct the office space. Generally, this additional structure depends on the portal frame for its stability.

When cranes are needed, they have an important influence on the design and the dimensions of portal frames. They create additional vertical loads as well as considerable horizontal forces, which influence the size of the column section, in particular. Where the crane is of relatively low capacity (up to about 20 tonnes),

brackets can be fixed to the columns to support the crane (see Figure 5.7(d)). Use of a tie member between haunches across the building or fixed column bases may be necessary to reduce the relative eaves deflection. The outward movement of the frame at crane rail level may be of critical importance to the functioning of the crane. For heavy cranes, it is appropriate to support the crane rails on additional columns, which may be tied to the portal frame columns by bracing in order to provide stability.

A mansard portal frame consists of a series of rafters and haunches (as in Figure 5.7(g)). It may be used where a large clear span is required but the eaves height of the building has to be minimised. A tied mansard may be economic solution where there is a need to restrict eaves spread.

Where the span of a portal frame is greater than 30 m, and there is no need to provide a clear span, a propped portal frame can reduce the rafter size and also the horizontal forces at the bases of the columns, so leading to savings in both steelwork and foundation costs. This type of frame is sometimes referred to as a “single span propped portal”, but it acts as a two-span portal frame in terms of the behaviour of the beam.

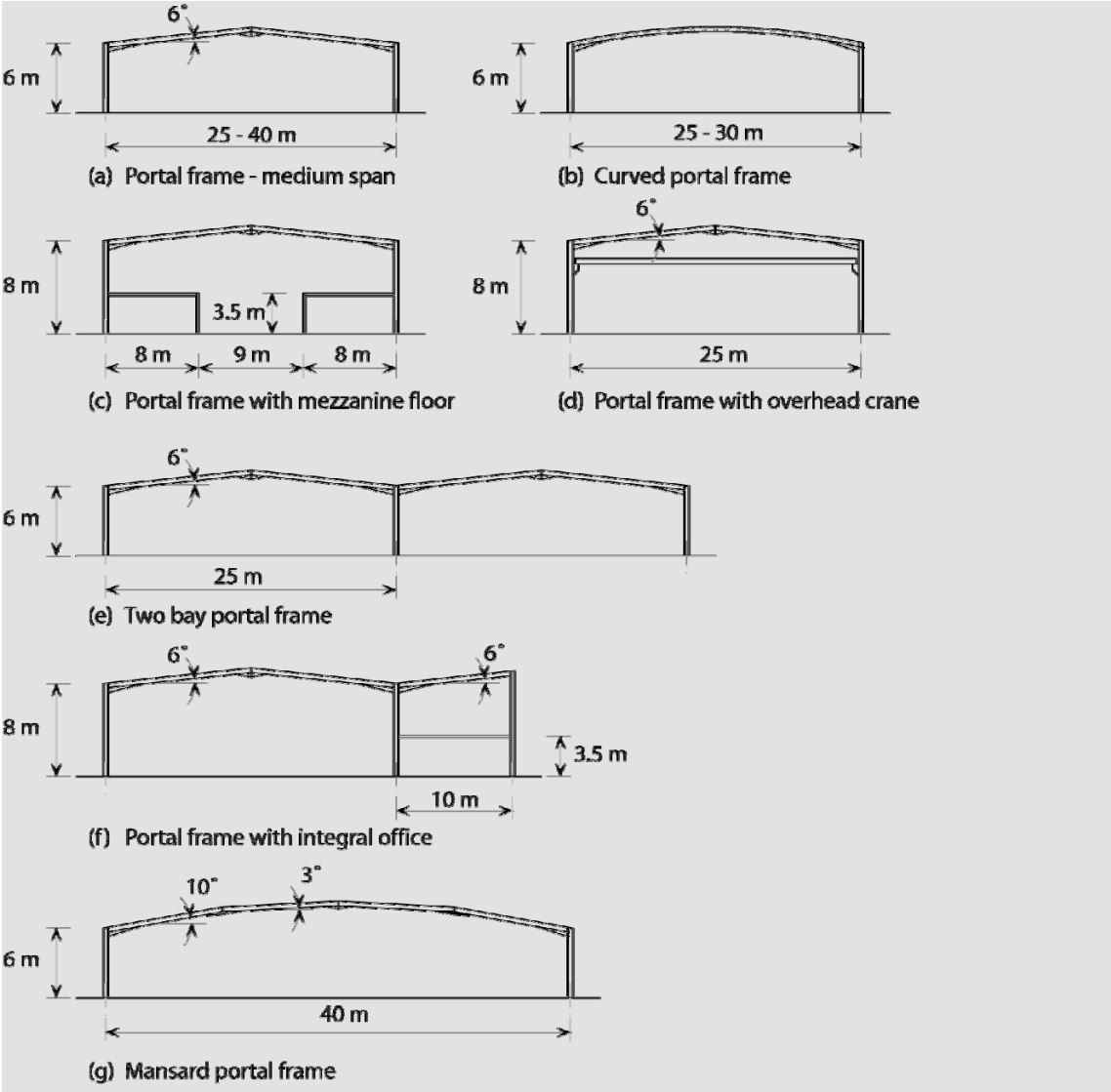

Figure 5.7 Different types of portal frame

In addition to the primary steel structure, a wide range of secondary components has been developed, such as cold formed steel purlins, which also provide for the stability of the framework. These simple types of structural systems can also be designed to be architecturally more appealing by using curved members, cellular or perforated beams etc.

Portal frames normally comprise columns and horizontal or sloping rafters, connected by moment-resisting connections. Frames with hinged (also known as ‘pinned’) column bases are generally preferred as they lead to smaller foundation sizes in comparison to fixed bases. Furthermore, columns with fixed bases require more expensive connection details, and are therefore predominately used only if high horizontal (sway) forces have to be resisted. However, pinned columns have the disadvantage of leading to slightly heavier steel weights, owing to the lower stiffness of the frame to both vertical and horizontal forces.

This form of rigid frame structure is stable in its own plane and provides a clear span that is unobstructed by bracing. Stability is achieved by rigid frame action provided by continuity at the connections, and this is usually achieved by use of haunches at the eaves. Out-of-plane stability in most cases has to be provided by additional elements,

such as tubular braces and purlins. Examples of bracing for a portal frame are shown in Figure 5.8. As an alternative to bracing, the profiled sheeting forming the roof can be used as a stressed skin diaphragm to provide a load path to the columns. Shear walls, cores and the use of fixed ended columns can also provide out-of-plane restraint to the frames.

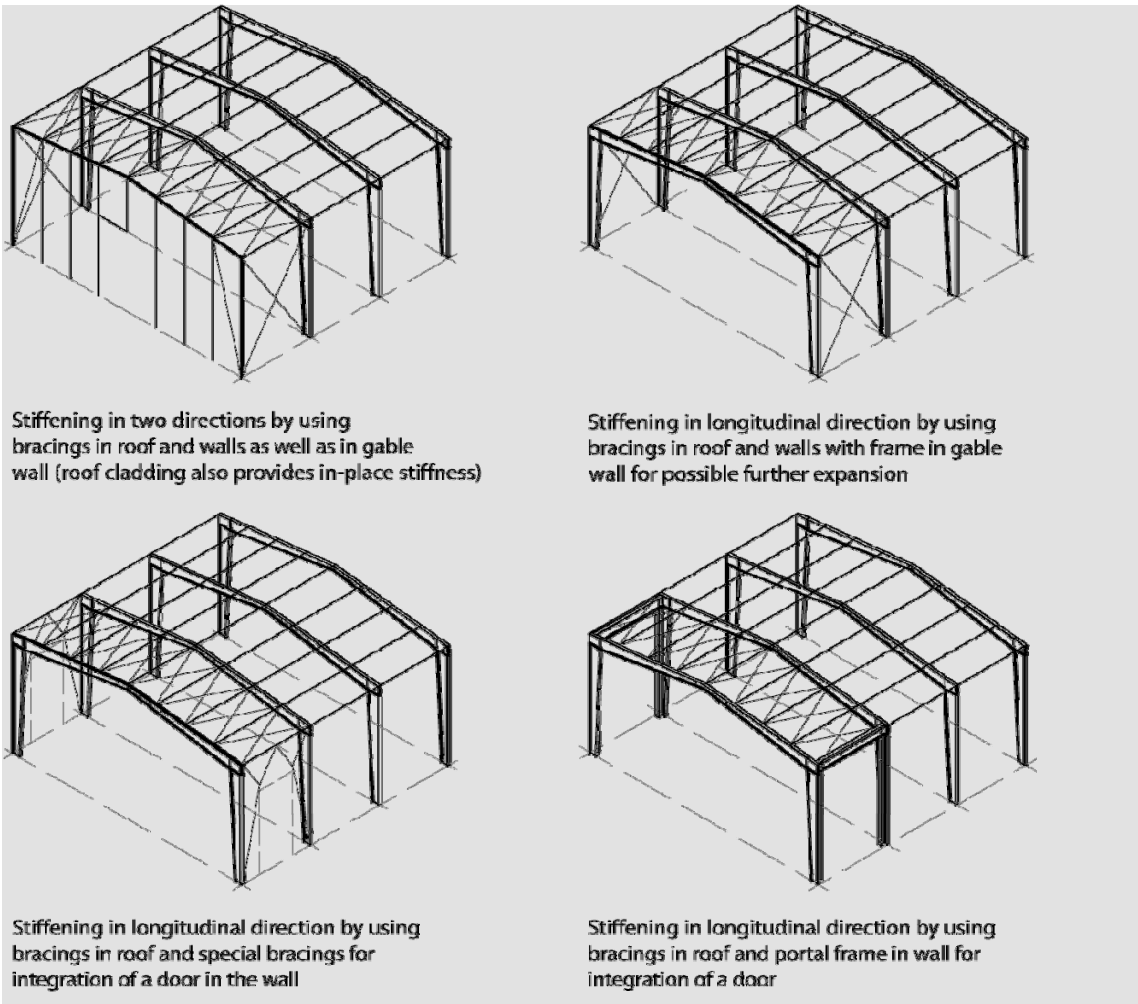

Figure 5.8 Bracing options for portal frames

Steel sections used in portal frame structures with spans of 12 m to 30 m are usually hot rolled sections and are specified in grades S235, S275 or even S355 steel. Use of high-strength steel is rarely economic in structures where serviceability (i.e., deflection) or stability criteria may control the design.

5.2.2 Pitched roof portal frame

The pitched roof portal frame is the most common form of the portal frame, and an example is shown in Figure 5.9. The main components and terminology of a pitched roof portal frame are highlighted in Figure 5.10. The use of haunches at the eaves and apex reduce the required depth of the rafter and achieve an efficient moment connection at these points. Often, the haunch is cut from the same size of section as the rafter.

Figure 5.9 A multi-span pitched roof portal frame under construction

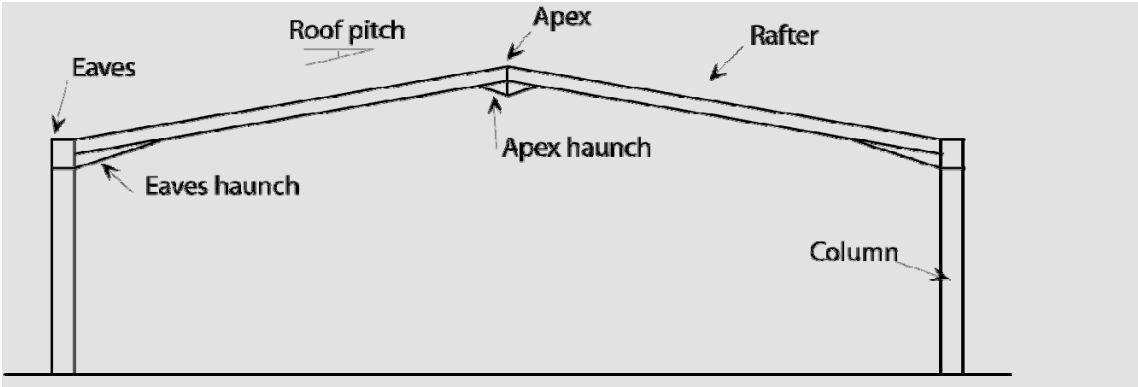

Figure 5.10 Terminology for a pitched roof portal frame

Suggested design strategy

For the most economic construction of a straightforward single span pitched roof portal frame:

- Choose a span between 15 m and 50 m (25 to 35 m is the most efficient).
- Choose an eaves height between 4 m and 10 m (5 m or 6 m is commonly adopted).
- Choose a roof pitch between 5% and 10% (5% or 6% is commonly adopted).
- Specify a frame spacing between 5 m and 8 m (typically 6 m, but greater spacings are associated with the longer span frames).
- Use haunches in the rafters, at the eaves, and (if necessary) at the apex, for economic connections

Table 5.1 can be used as an aid for pre-design of single span portal frames. Frames are assumed to be spaced at 6 m, with a pitched roof slope of 5%.

Table 5.1 Pre-design table for pitched roof portal frames

Span [m]	**Eaves height** [m]	**Snow load** [kN/m²]	**Rafter**	**Column**	**Haunch length** [m]	**Weight** [kg]
12.0	4.0	0.5	IPE 240	IPE 300	0.6	712
		1.0	IPE 270	IPE 330	0.6	832
	6.0	0.5	IPE 270	IPE 360	0.96	1131
		1.0	IPE 300	IPE 360	0.6	1195
	8.0	0.5	IPE 330	IPE 450	2.0	1893
		1.0	IPE 330	IPE 450	2.05	1896
15.0	4.0	0.5	IPE 270	IPE 330	0.85	947
		1.0	IPE330	IPE360	0.75	1208
	6.0	0.5	IPE300	IPE360	0.75	1330
		1.0	IPE330	IPE400	0.85	1546
	8.0	0.5	IPE330	IPE450	2.55	2065
		1.0	IPE360	IPE500	0.9	2315
18.0	4.0	0.5	IPE330	IPE360	0.9	1360
		1.0	IPE360	IPE450	0.95	1671
	6.0	0.5	IPE330	IPE400	1	1698
		1.0	IPE400	IPE450	0.9	2144
	8.0	0.5	IPE400	IPE450	0.9	2448
		1.0	IPE400	IPE500	1	2661
2.10	4.0	0.5	IPE360	IPE400	1.05	1757
		1.0	IPE400	IPE500	1.45	2174
	6.0	0.5	IPE360	IPE450	1.2	2158
		1.0	IPE450	IPE500	1.05	2748
	8.0	0.5	IPE400	IPE500	1.05	2859
		1.0	IPE450	IPE550	1.05	3336
24.0	4.0	0.5	IPE400	IPE450	1.3	2260
		1.0	IPE450	IPE500	1.8	2677
	6.0	0.5	IPE400	IPE500	1.4	2722
		1.0	IPE500	IPE550	1.2	3487
	8.0	0.5	IPE450	IPE550	1.2	3576
		1.0	IPE500	IPE600	1.2	4166
27.0	4.0	0.5	IPE450	IPE500	1.75	2902
		1.0	IPE500	IPE550	2.2	3429
	6.0	0.5	IPE450	IPE550	1.45	3410
		1.0	IPE550	IPE600	1.35	4380
	8.0	0.5	IPE500	IPE600	1.35	4447
		1.0	IPE550	IPE750X137	1.35	5089
30.0	4.0	0.5	IPE500	IPE550	2	3678
		1.0	IPE600	IPE600	1.5	4749
	6.0	0.5	IPE500	IPE600	1.5	4247
		1.0	IPE600	IPE750X137	1.5	5402
	8.0	0.5	IPE500	IPE600	1.75	4750
		1.0	IPE600	IPE750X137	1.5	5939

Table assumes frames @ 6m centres and 5% slope

5.2.3 Connections

The three major connections in a single bay portal frame are those at the eaves, the apex and the column base. For the eaves, bolted connections are mostly used of the form shown in Figure 5.11. A haunch can be created by welding a 'cutting' to the rafter to increase its depth locally and to make the connection design more efficient. The 'cutting' is often made from the same steel section as the rafter.

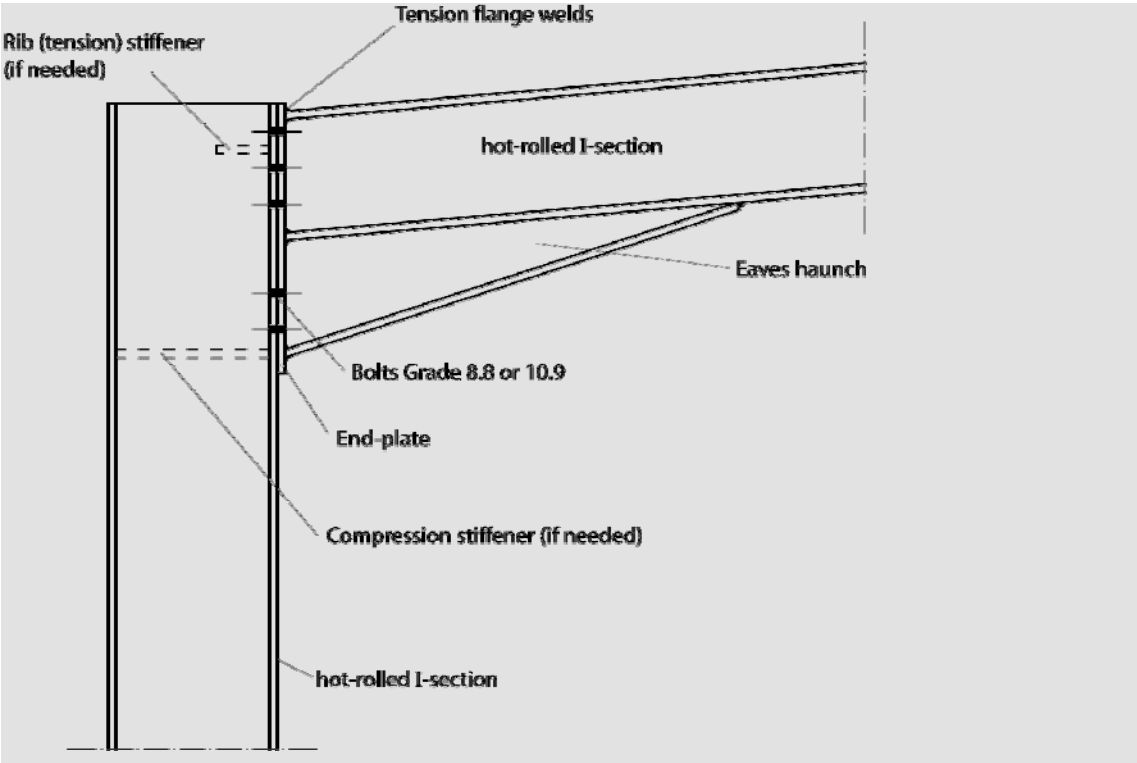

Figure 5.11 Typical eaves connection in a pitched roof portal frame

In some cases, the column and the haunched part of the beam are constructed as one unit, and the constant depth part of the beam is bolted using an end plate connection.

In order to reduce manufacturing costs, it is preferable to design the eaves connection without the use of stiffeners.

The apex connection is often designed similarly, see Figure 5.12. If the span of the frame does not exceed transportation limits (about 16 m), the on-site apex connection can be avoided, thus saving costs.

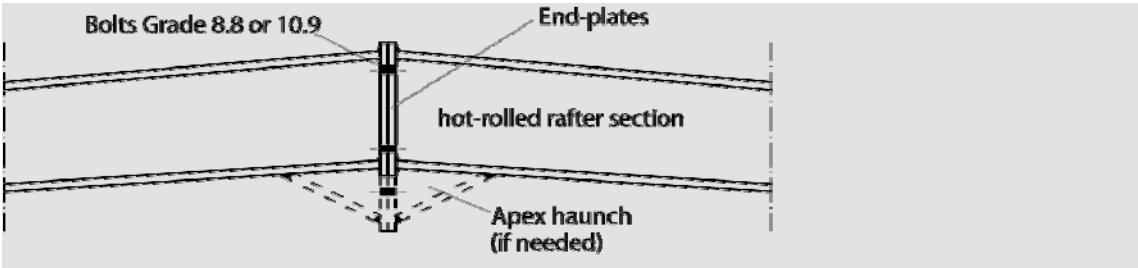

Figure 5.12 Typical apex connection in a pitched roof portal frame

The base of the column is often kept simple with larger tolerances in order to facilitate the interface between the concrete and steel-work. Typical details are presented in

Figure 5.13. Pinned connections are often preferred in order to minimize foundation sizes. However, high horizontal forces may require the use of fixed based connections.

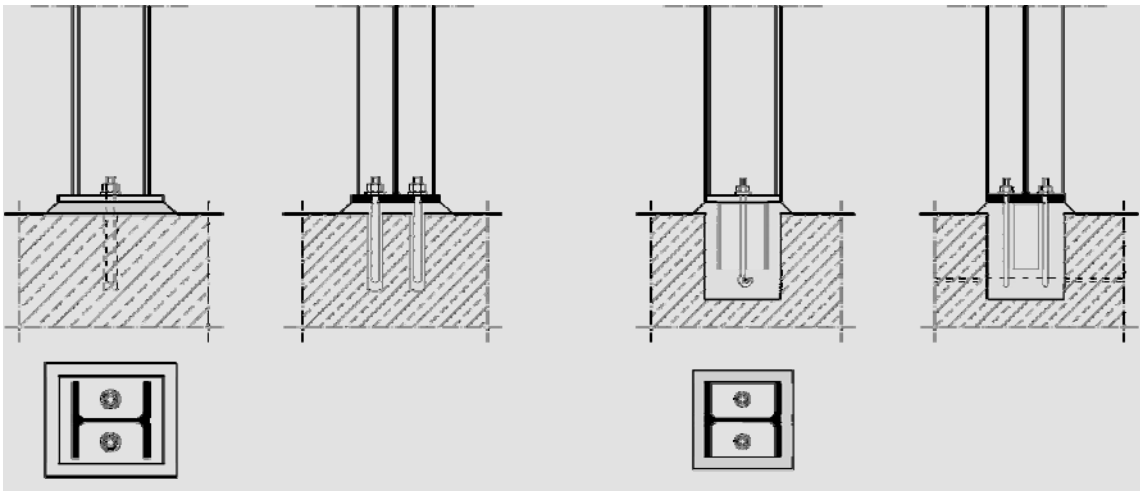

Figure 5.13 Typical nominally pinned base connections in a portal frame

5.3 Column and beam structures

For this type of support structure, bracings are required in both directions; in the roof as well as in the walls - in order to provide stability for horizontal loads (see Figure 5.14). For that reason, it is often used for predominantly enclosed halls (i.e., no substantial openings). This fact also has to be taken into account during the installation stage by providing temporary bracings.

For simple column and beam structures, the columns are connected to the beams using pinned connections. The column members are loaded mainly in compression, which leads to smaller sections. However, compared to the portal frame, the internal moments in the beam are greater, which leads to larger steel sections. Since pinned connections are less complex than moment resisting connections, fabrication costs can be reduced. Base connections are normally pinned, to minimise foundation costs. Column sections are mostly from the HEA-series, with beams from the IPE-series. The steel grade is normally S235, as in most cases the deflection criteria govern. Spans are up to 25 m, typically, with eaves heights up to 10 m. Buildings with spans greater than this are likely to require roof trusses.

The roof normally comprises panels with a bituminous covering on top of a steel sheet, insulation between, and steel liner sheets below. The type of roofing depends on the distance between the roof beams. The roof panels are used to stabilize the roof beams against lateral torsional buckling.

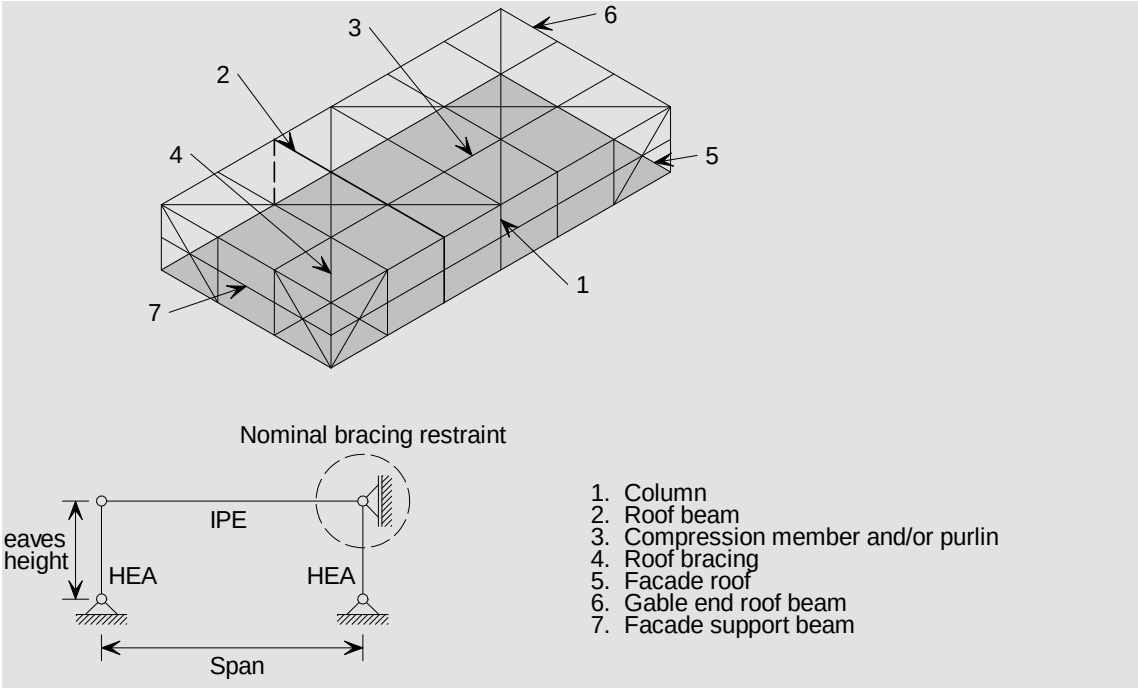

Figure 5.14 Typical column and beam structure with nominally pinned connections

Suggested design strategy

For the most economic construction:

- Use beam and column sizes given in Table 5.2.
- Use grade S235 steel
- Use pinned bases

Table 5.2 Pre-design table for flat roof column and beam structures with pinned bases

Span [m]	Eaves height [m]	Beam	Column
10	5	IPE270	HE120A
	6	IPE270	HE140A
	8	IPE270	HE180A
	10	IPE270	HE220A
12	5	IPE300	HE120A
	6	IPE300	HE140A
	8	IPE300	HE180A
	10	IPE300	HE220A
14	5	IPE360	HE120A
	6	IPE360	HE140A
	8	IPE360	HE180A
	10	IPE360	HE220A
16	5	IPE400	HE120A
	6	IPE400	HE140A
	8	IPE400	HE180A
	10	IPE400	HE220A
18	5	IPE450	HE120A
	6	IPE450	HE140A
	8	IPE450	HE180A
	10	IPE450	HE220A
20	5	IPE500	HE120A
	6	IPE500	HE140A
	8	IPE500	HE180A
	10	IPE500	HE220A
22	5	IPE500	HE120A
	6	IPE500	HE140A
	8	IPE500	HE180A
	10	IPE500	HE220A
24	5	IPE550	HE120A
	6	IPE550	HE140A
	8	IPE550	HE180A
	10	IPE550	HE220A

Data assumes frames @ 5 m centres and 0.56 kN/m^2 snow load

5.4 Fire safety

In most European countries single storey buildings can be constructed without fire resistance, provided that they conform to specified limits. Examples of specific limits are:

- France: single storey building if the height of the building is below 10 m.
- Germany, Spain and Switzerland: provided that the building is fitted with a sprinkler system.

- UK and Netherlands: single storey buildings do not require fire resistance, unless the structure considered supports an external wall, which requires fire resistance due to the proximity of another building.
- Sweden: there are no requirements for single storey buildings unless it is an assembly hall for more than 150 people

In most of the European countries fire resistance requirement does not apply to the trusses or rafters supporting the roof unless the collapse of these members affects the stability of the walls.

For large industrial buildings, fire compartmentation may play an important role in the design, even if there is no internal office space. In order to prevent fire spread, the compartment size is limited to a certain value. Therefore, fire walls have to be provided for separation and should ensure at least 60 and often 90 minutes fire resistance. This is even more vital if hazardous goods are stored in the building.

Because an office is designed for use by a larger number of people, fire safety demands are stricter. If the offices are located on the top floor of the building, additional escape routes are required and active fire fighting measures have to be considered. Fire-spread has to be prevented from one compartment to another, which can be achieved, for example by a composite slab between the office and industrial space.

The general advice given in Section 4.4 for commercial buildings also applies to industrial buildings.

REFERENCES

1 Euro-build in steel: evaluation of client demand, sustainability and future regulations on the next generation of building design in steel, CEC 7210-PR/381